For the heating engineer/for the owner

Operating and Installation Manual

Mixer module VR 61

Mixer module for VRC 430 / VRC 430f

VR 61

GB

spares & parts online IBASIS.CO.UK

Contents

1 Notes on the documentation 3
1.1 Storage of the documents 3
1.2 Symbols used 3
1.3 Validity of the instruction manual 3

2 Description of the device 4
2.1 Identification plate 4
2.2 CE-mark/conformity 4
2.3 Intended use 4

3 Safety instructions and regulations 4
3.1 Safety instructions 4
3.2 Regulations 4

4 Incorporation of the VR 61 in the heating system 5
4.1 Hydraulic drawing 1 6
4.2 Hydraulic drawing 2 7
4.3 Hydraulic drawing 3 8
4.4 Hydraulic drawing 4 9

5 Assembly 10
5.1 Scope of delivery 10
5.2 Assembling VR 61 mixer module 10
5.3 Assembling VR 10 standard sensor 11

6 Electrical installation 11
6.1 Connecting VR 61 mixer module 11

7 Start-up 13
7.1 Installation assistant 13
7.2 VRC 430 / VRC 430f Operating level for the expert technician 14
7.3 Function floor drying 19

8 VRC 430 / VRC 430f Operating level for the operator 19
8.1 Display screens in the operating level for the operator 20

9 Technical data 22

1 Notes on the documentation

The following notes are intended to help you throughout the entire documentation.
Further documents apply in combination with this operating and installation manual.
We accept no liability for any damage caused by failure to observe these instructions.

Other applicable documents
- The operating and installation instructions for the VRC 430 or VRC 430f
- The operating and installation manuals of the heating system
- All instructions for the accessories

The following sections are intended for the **expert technician**:
- 4 Incorporation of the VR 61 in the heating system
- 5 Assembly
- 6 Electrical installation
- 7 Start-up

The following sections are intended for the **operator**:
- 8 VRC 430 / VRC 430f Operating level for the operator

1.1 Storage of the documents

The operator of the system is responsible for the storage of these operating and installation manuals so that they are available if required.

1.2 Symbols used

Observe the safety instructions in this manual during installation , assembly and operation of the equipment!

Danger!
Danger of death from electric shock!

Danger!
Immediate risk of serious injury or death!

Attention!
Danger of burning and scalding!

Attention!
Potentially dangerous situation for the product and environment!

Note!
Useful information and instructions.

⇒ **Symbol for a necessary task**

1.3 Validity of the instruction manual

This operating and installation instruction manual is only applicable to equipment with the following part numbers:

00 2002 8527	00 2002 8530
00 2002 8528	00 2002 8531
00 2002 8529	00 2002 8532

The part number of your unit can be obtained from the identification plate.

2 Description of the device

The mixer module VR 61 is used for the system extension of the VRC 430 or VRC 430f regulators.

Different configurations of heating system can be realised using the VR 61 mixer module.
The four basic configurations correspond to the four hydraulic drawings, described in greater detail in Section 4 Incorporation of the VR 61 in the heating system.

2.1 Identification plate

The identification plate of the mixer module VR 61 is on the inside of the housing cover.

2.2 CE-mark/conformity

The CE label documents that the mixer module VR 61, in connection with Vaillant heating equipment, fulfils the basic requirements of the following guidelines:
- Electromagnetic compatibility directive (Guideline 89/336/EEC of the council)

2.3 Intended use

The mixer module VR 61 is a state-of-the-art appliance which has been constructed in
accordance with recognised safety regulations .
Nevertheless, there is still a risk of death or serious injury to the user or others or of damage to the device and other property in the event of improper use or use for which it is not intended.

The mixer module VR 61 is a system component which, in combination with the VRC 430 or VRC 430f,provides the control two heating circuits, a storage tankcharging circuit or a circulation pump.

Any other use or extended use is considered to be use other than intended. The manufacturer or supplier is not liable for any resulting damage. The owner alone bears any risk.
Intended use also includes observing the operating and installation instructions and all other documents having validity.

3 Safety instructions and regulations

The mixer module VR 61 must be installed by a qualified engineer , who is responsible for adhering to the existing standards and regulations .
We accept no liability for any damage caused by failure to observe these instructions.

3.1 Safety instructions

Danger!
Connections carrying voltage!

When working in the open mixer module VR 61 and in the control cabinet of the heating equipment there is a danger to life by electric shock.

Before working on the mixer module VR 61 and in the control cabinet of the heating equipment turn off the power supply and secure against re-engagement.
The LED (green) on the PCB of the mixer module VR 61 must not light up.

3.2 Regulations

Standard wires must be used for wiring.
230 V lines must be sleeved lines (e.g. NYM 3x1,5).
Flexible lines must not be used for 230 V lines .

Minimum cross-section of the wires:
- Connection lead 230 V (pump or mixer connection cable) 1,5 mm²
- Low-voltage leads (sensor or Bus leads) 0,75 mm²

Do not exceed the following maximum wire lengths:
- Sensor connection 50 m
- Bus lead 300 m

If sensor and BUS lines run parallel with 230 V cables for more than 10 m, they must be laid separately.
All connection lines must be fixed with the table terminals provided in the cabinet.

Do not use free terminals of the appliances as support terminals for other wiring.

The mixer module VR 61 must be installed in dry rooms.

All wiring must be in accordance with Building Regulations Part P and BS 7671 (IEE Wiring Regulations), and must be carried out by a suitably qualified person

4 Incorporation of the VR 61 in the heating system

The application possibilities of the mixer module VR 61 are shown in the four hydraulic diagrams.
In each case these are maximum configurations.
Some of the components can be optional.

Hydraulic drawing 1
- an uncontrolled heating circuit
- a controlled heating circuit (controlled 3 way valve)
- circulation pump for hot water controlled by VR 61
- hot water via VUV (priority changeover valve)

Hydraulic drawing 2
- an uncontrolled heating circuit
- a controlled heating circuit (controlled 3 way valve)
- circulation pump for hot water controlled by VR 40
- charging pump for storage tank controlled by VR 61

Hydraulic drawing 3
- an uncontrolled heating circuit
- a controlled heating circuit (controlled 3 way valve)
- circulation pump for hot water controlled by VR 61
- charging pump for storage tank controlled by heating equipment

Hydraulic drawing 4
- two uncontrolled heating circuits (controlled by motor valves)
- heating pump integrated in the heating equipment
- circulation pump for hot water controlled by VR 40
- hot water controlled by motor valve via VR 61

The following conventions apply to the hydraulic drawings:

Lines:

Representation	Meaning
.....	eBUS line twin core
- — - — - -	Sensor line low voltage
———	Control line 230 V~
▬▬▬	Heating feed
▬ ▬ ▬ ▬	Heating return
═══	Hot water feed/return, infeed

Table 4.1 Line representation in the hydraulic drawings

Designations:

Description	Meaning
AF	External sensor (VRC 693 or VRC 9535)
HK1-P	Pump for heating circuit 1
HK2-P	Pump for heating circuit 2
HK2	Mixer valve for heating circuit 2 (controlled)
LP	Charging pump for storage tank
SP 1	Storage probe (VR10)
VF 1	Feed sensor 1 (VR 10)
VF 2	Feed sensor 2 (VR 10)
VR 40	Additional module (integrated in heating equipment)
VR 81	Remote control unit
VRC 9642	Maximum thermostat, accessories
ZP	Circulation pump for hot water

Table 4.2 Designations in the hydraulic drawings

4.1 Hydraulic drawing 1

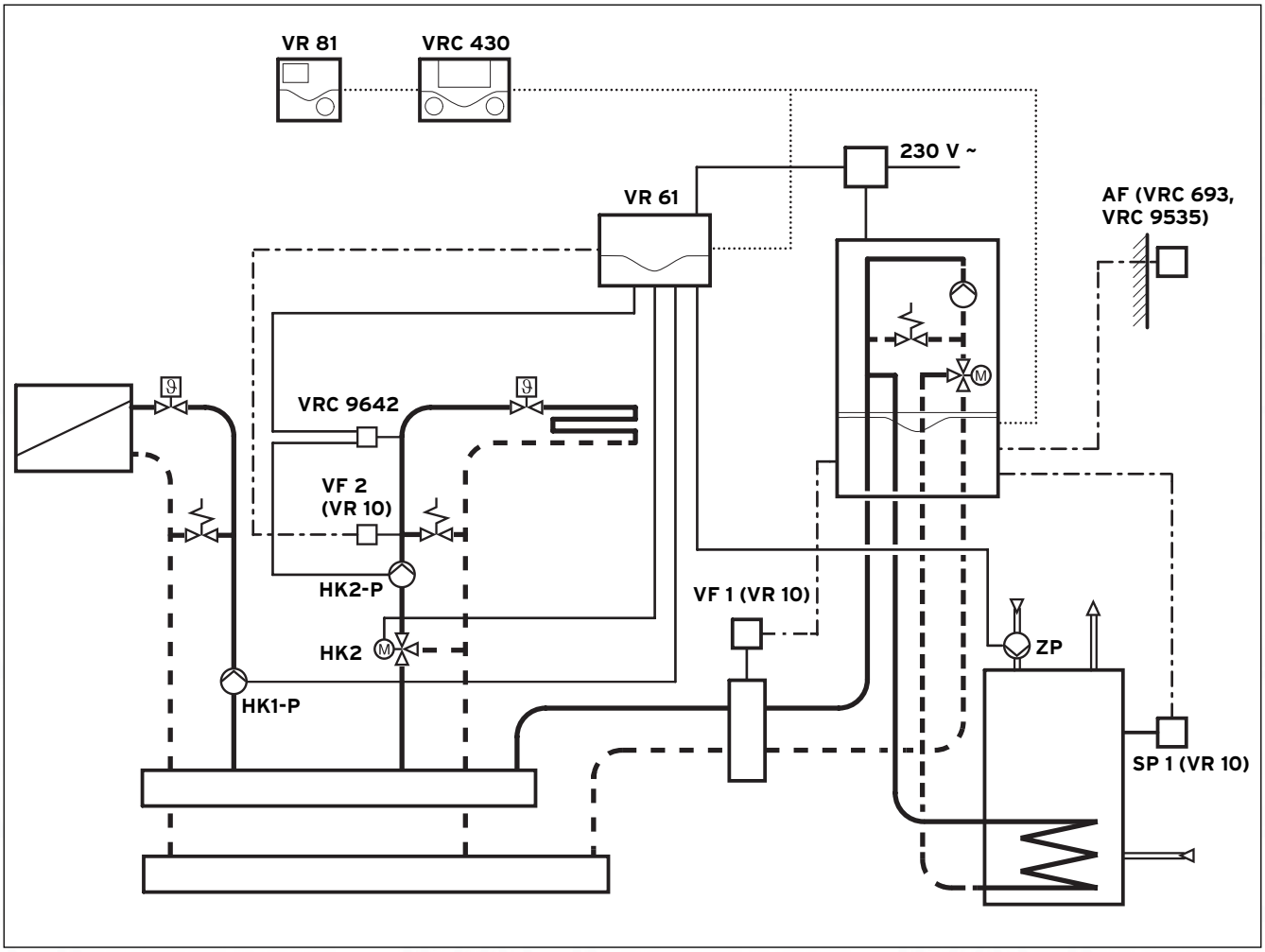

Fig. 4.1 Hydraulic drawing 1

- an uncontrolled heating circuit
- a controlled heating circuit (controlled 3 way valve)
- circulation pump water controlled by VR 61
- Hot water via VUV (priority changeover valve,integrated in the heating equipment)

4.2 Hydraulic drawing 2

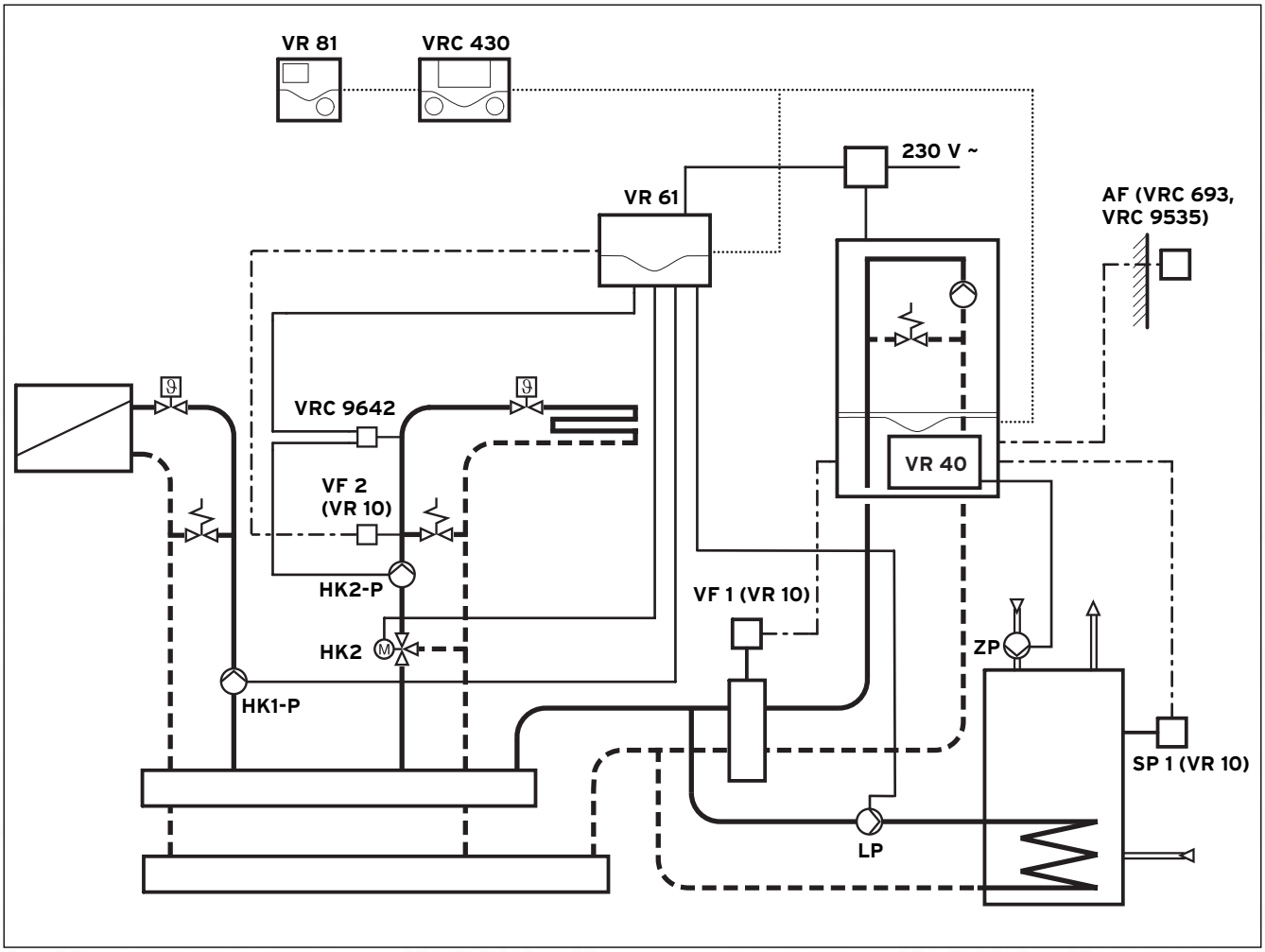

Fig. 4.2 Hydraulic drawing 2

- an uncontrolled heating circuit
- a controlled heating circuit (controlled 3 way valve)
- circulation pump for hot water controlled by VR 40
- charging pump for storage tank controlled by VR 61

Note!
Observe on hydraulic drawing 2 the required configuration with the aidof the installation assistant (see also Section 7.1):
On the relay output ZP/LP "LP" must be selected on display screen A3.

4.3 Hydraulic drawing 3

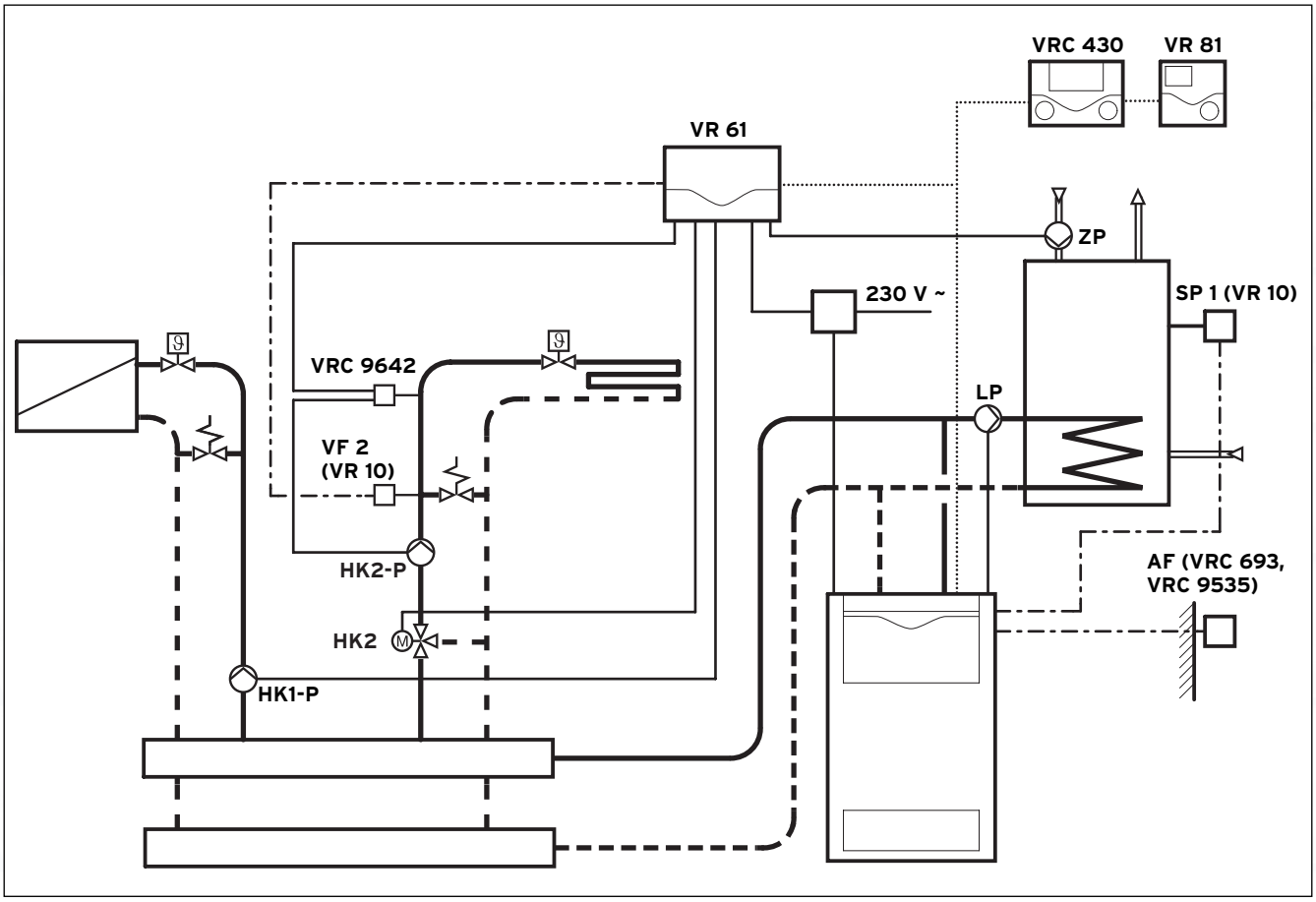

Fig. 4.3 Hydraulic drawing 3

- an uncontrolled heating circuit
- a controlled heating circuit (controlled 3 way valve)
- circulation pump for hot water controlled by VR 61
- charging pump for storage tank controlled by heating equipment

4.4 Hydraulic drawing 4

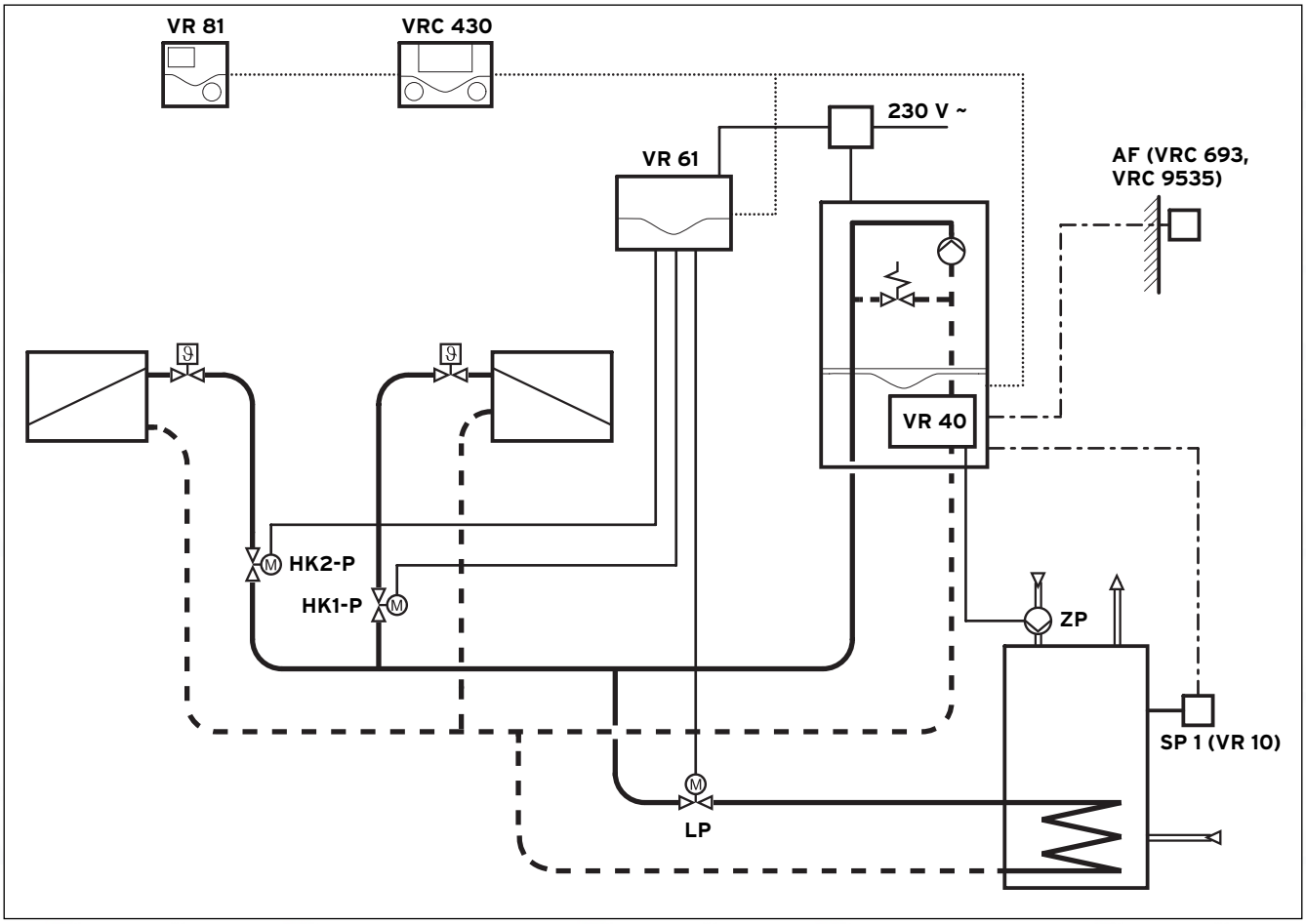

Fig. 4.4 Hydraulic drawing 4

- two uncontrolled heating circuits, Zone and Zone 2, (switched by motor valves)
- heating pump integrated in the heating equipment
- circulation pump for hot water controlled by VR 40
- hot water controlled by motor valve via VR 61

Attention!
If the installation, assembly or configuration is incorrect frost-damage to the heating system may occur.

In order to ensure frost protection and comfortable operation of the two uncontrolled heating zones, Zone 1 and Zone 2on hydraulic diagram therefore, the remote control unit VR 81 must also be installed (VR 81 monitors e.g. Zone 2, the controller VRC 430 Zone 1).
In the operating level for the expert technician (see Section 7.2) "Thermostat" must be selected in each case on the display screens C8 and C10 with room control.

Note!
The designations HK1-P, HK2-P and LP in the hydraulic drawing 4 repeat the terminal allocations on the VR 61.
The control lines of the motor valve for both the heating circuits are connected to the terminals HK1-P and HK2-P of the VR 61.
The control line of the motor valve for hot water is connected to the terminal LP of the VR 61.

Note!
Observe on hydraulic drawing 4 the required configuration with the aidof the installation assistant (see also Section 7.1):
The heating circuit type HC2 "Zone" must be selected on display screen A2.
On the relay output ZP/LP "LP" must be selected on display screen A3.

5 Assembly

The mixer module VR 61 is wall-mounted in proximity with the associated function units .
The adjustment of all required parameters is carried out using the controller VRC 430 or VRC 430f via eBUS. All connections of the associated function units take place directly on the mixer module VR 16 via ProE terminals.

5.1 Scope of delivery

Before starting the installation, check the scope of delivery for completeness and lack of damage.

Pos.	Number	Component
1	1	Mixer module VR 61
2	1	VR 10 standard sensor
3	1	Mounting accessories (screws, plugs)

Table 5.1 Scope of delivery of the mixer module VR 61

Note!
Depending upon the configuration of the heating system, additional sensors may be required as storage tank sensors.
Only the standard sensor VR 10 from the Vaillant accesories programme should be used. The heating control using Vaillant components is matched to the sensor characteristic curve of the VR 10.

Temp. in °C	R in kOhm	Temp. in °C	R in kOhm
10	5,363	55	0,806
15	4,283	60	0,671
20	3,372	65	0,562
25	2,700	70	0,473
30	2,176	75	0,399
35	1,764	80	0,339
40	1,439	85	0,288
45	1,180	90	0,247
50	0,973		

Table 5.2 Standard sensor VR 10, allocation temperature measurement value

5.2 Assembling VR 61 mixer module

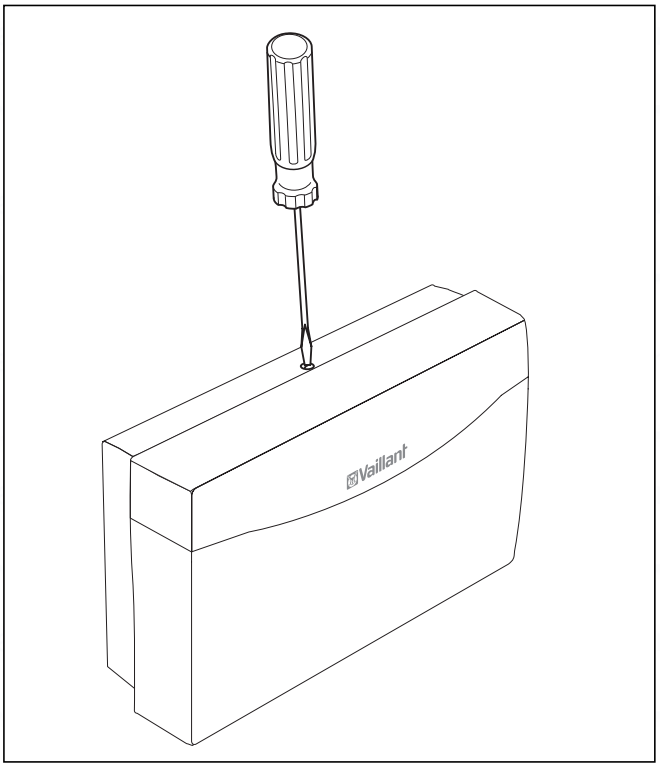

Fig. 5.1 Opening the casing

⇒ Release the screw on the top of the casing .
⇒ Tilt the casing cover forwards slightly and remove.

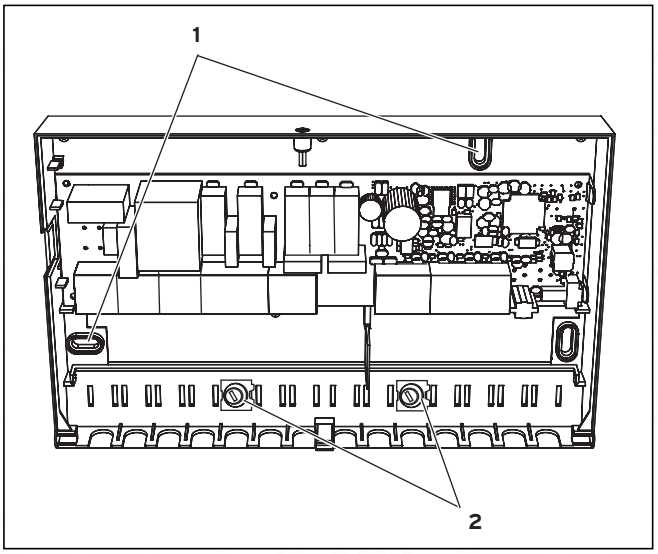

Fig. 5.2 Fitting the mixer module VR 61

Key
1 Mounting apertures
2 Cable brackets

⇒ Mark the two fixing points at a suitable position in accordance with the fixing openings (**1**).
⇒ Drill two holes for the suitable plugs and screw the casing securely in position.
⇒ The electrical installation is carried out as described in Chapter 6.
⇒ Insert the casing cover back into the hinges and hinge the casing cover back up into position.
⇒ Screw the casingcover in position in accordance with Fig. 5.1.

5.3 Assembling VR 10 standard sensor

The VR 10 standard sensor is so designed that it can be used as a cylinder sensor, (e.g. as an immersion sensor in a cylinder sensor tube) or as a flow sensor (e.g. in a hydraulic switch).
The fixing tape enclosed can also be used to fix the VR 10 as a contact sensor onto a heating pipe. We recommend that the pipe with the sensor is insulated to ensure optimum temperature measurements.

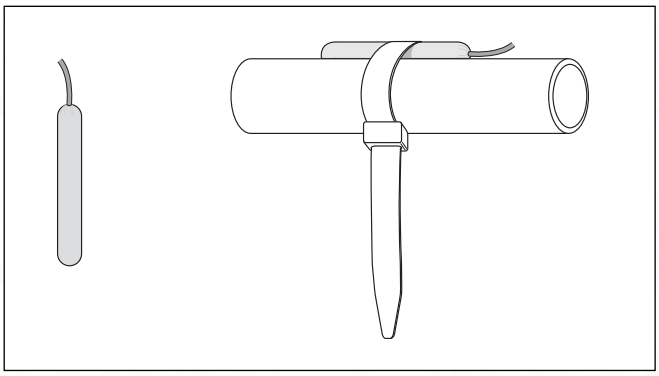

Fig. 5.3 Standard sensor VR 10 as contact sensor

6 Electrical installation

The electrical connection must be done by a suitably qualified heating engineer who is responsible for complying with the existing standards and guidelines.

Danger!
Connections carrying voltage!

When working in the open mixer module VR 61 and in the control cabinet of the heating equipment there is a danger to life by electric shock.

Before working on the mixer module VR 61 and in the control cabinet of the heating equipment turn off the power supply and secure against re-engagement.
The LED (green) on the PCB of the mixer module VR 61 must not light up.

If the casing of the mixer module VR 61 is closed , open it as described under Chapter 5.2.

6.1 Connecting VR 61 mixer module

The mains input is provided by the user up to the mixer module VR 61.
The eBUS connection to the mixer module VR 61 can be branched off at any point in the eBUS system (see Fig. 6.1).

⇒ Wire up the mixer module VR 61 as shown in Fig. 6.2.

Note!
The cables for the 230 V mains connection and for e-BUS connection are not included in the supply.

The storage tank sensor 1 (SP1, accessories VR 10) is connected to the wiring harness of the heating equipment (see the documents which also apply, installation instructions heating equipment). This also applies if the storage tank charging pump is connected directlyinto the mixer module VR 61.

If a hydraulic switch is fitted the feed sensor 1 (VF1, accessories VR 10) is mounted in the feed behind or within the hydraulic switch. The connection is carried out via the edge connector X8 (included in the controller VRC 430 or VRC 430f) in the control cabinet of the heating equipment (see Fig. 6.3).

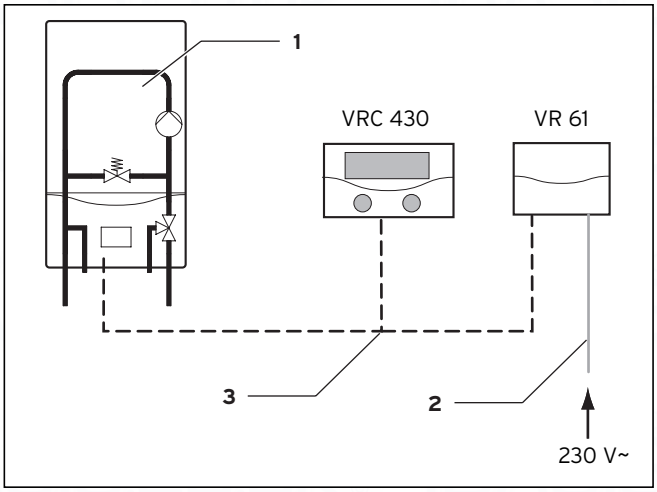

Fig. 6.1 Connection of eBUS and mains cable in the system

Key
1 Heating unit
2 230 V line from the user
3 eBUS connection (twin core)

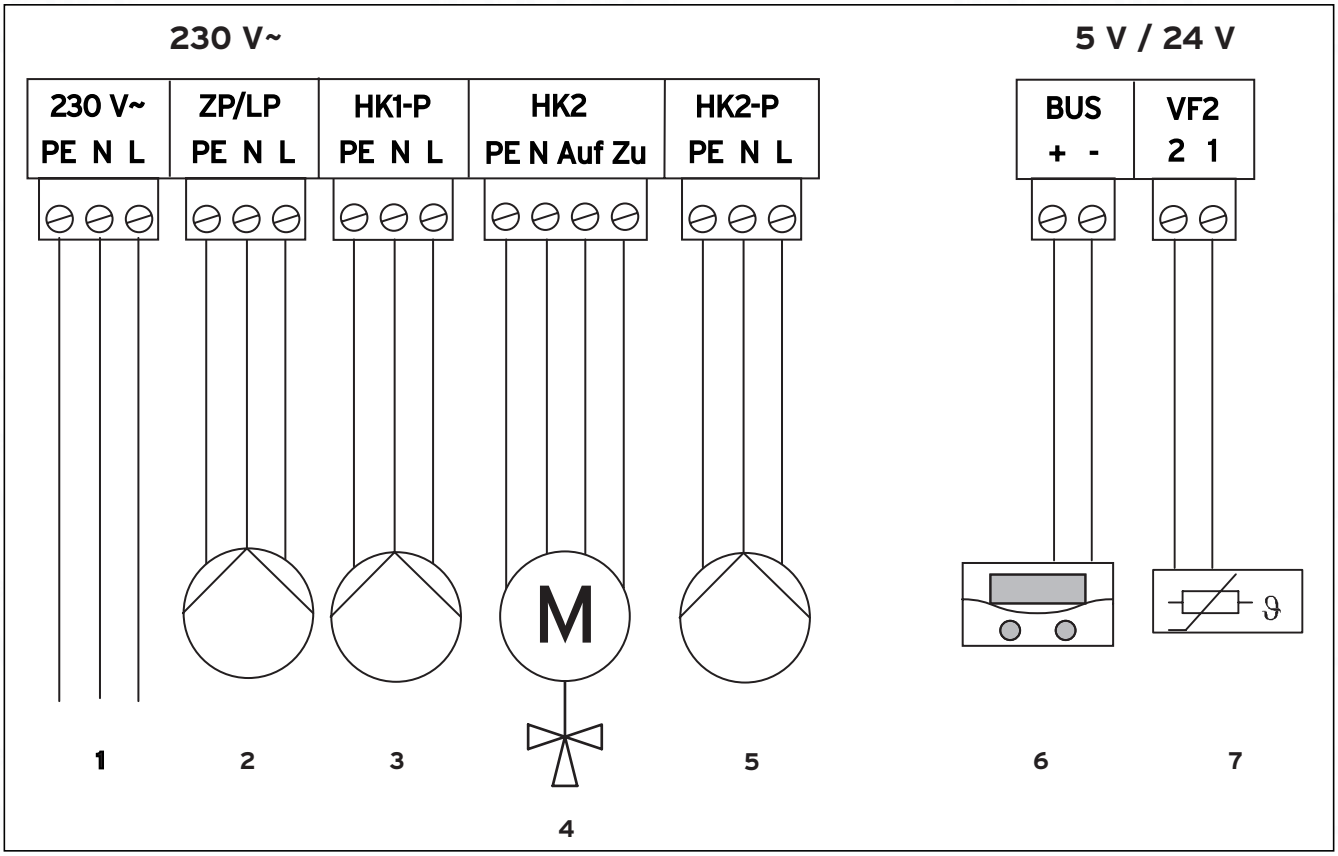

Fig. 6.2 Terminal allocation of the mixer module VR 61

Key
1 Mains connection
2 Charging pump or circulation pump
3 Pump heating circuit 1
4 Mixer valve
5 Pump heating circuit 2
6 Controller VRC 430
7 Feed sensor 2

Note!
If a charging pump or circulation pump is connected, the configuration is carried out using the installation assistant of the controller VRC 430 or VRC 430f.

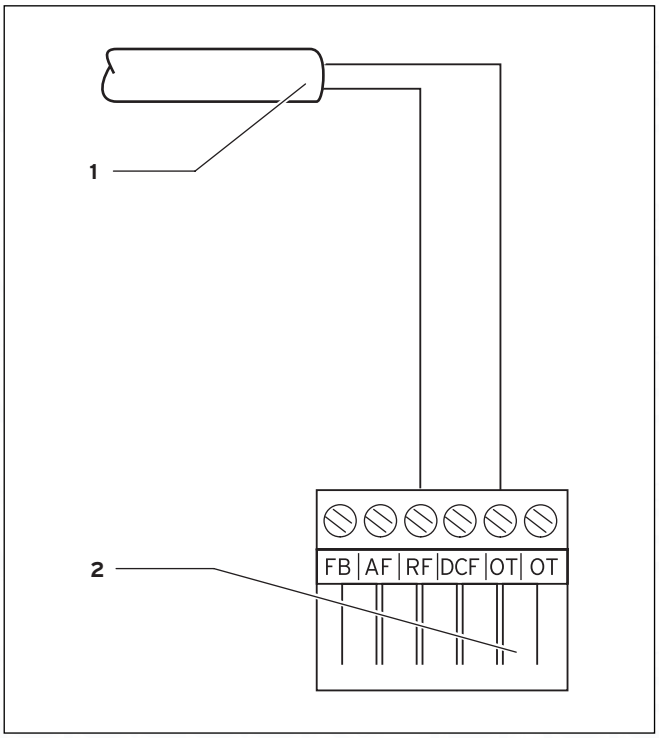

Fig. 6.3 Fitting the feed sensor 1

Key
1 Feed sensor 1 (VR 10)
2 6 pole edge connector X8 for plug socket location in the control cabinet of the heating equipment

After connecting the electrical installation:
⇒ Secure all the lines in the VR 61 with the included cable brackets (see Fig. 5.2).
⇒ Insert the casing cover back of the VR 61 into the hinges and hinge the casing cover back up into position.
⇒ Screw the casing cover in position in accordance with Fig. 5.1.

7 Start-up

The commissioning of the mixwe module VR 61 is carried out in conjunction with the commissioning of the controller VRC 430 or VRC 430f.
Proceed in accordance with the instructions in the manual of the VRS 430 or VRC 430f controller.

7.1 Installation assistant

When commissioning for the first time, you will be supported by the installation assistant.
With the installation assistant you can enter the most important parameters of the heating system.
The following differences are produced by the installation of the mixer module VR 61 in the heating system with respect to the standard configuration as described in the manual for the VRC 430 or VRC 430f:

- Display screen A2

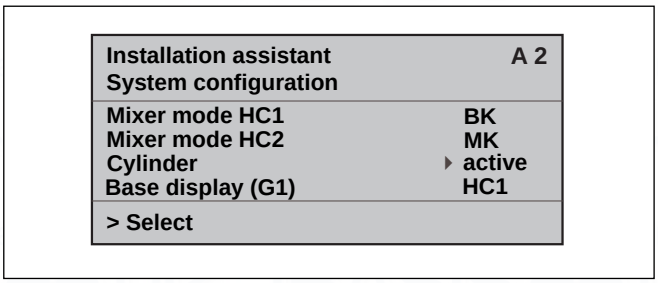

Fig. 7.1 Installation assistant display screen A2

The configuration of the heating system is shown in display screen A2.
In the heating circuit mode HC1 you can select between burner circuit (BK) and inactive.
In the heating circuit mode HC2 you can select between mixer circuit (MK), inactive and Zone.

Note!
If the heating system is structured in accordance with hydraulic drawing 4, i.e. two uncontrolled heating circuits, "Zone" must be selected in heating circuit mode HC2.

In the case of the storage tank you can switch between active and inactive.
Using the parameter basic display (G1) you can determine whether the display screen G1 is not shown at all (value "OFF") or whether the values from heating circuit 1 or heating circuit 2 are dispalyed.

- Display screen A3

Installation assistant **System configuration**	**A 3**
Relay output ZP/LP:	▸ **ZP**
> Select	

Fig. 7.2 Installation assistant display screen A2

Note!
If the heating system is structured according to hydraulic drawing2 or 4, the relay output ZP/LP must be set to "LP".

- Display screen A5

Installation assistant **Module test**	**A 5**
Module selection	**VR 61**
Sensors	▸ **VF2**
Actors	**HK1-P**
Activation heat generator	**OFF**
> Select	

Fig. 7.3 Installation assistant display screen A5

On display screen A5 of the installation assistant you can select the components for which a function test should be carried out (the components are actuated briefly).
It is a pre-requisite that "VR 61" is selected as the module selection.

Sensors		Actuators	
VF2	Feed sensor 2	LP/ZP	Charging pump/ circulation pump
		HK1-P	Pump heating circuit 1
		HK2	Mixer valve
		HK2-P	Pump, heating circuit 2

Table 7.1 Components for function test in display screen A5

Attention!
Improper installation/assembly can lead to damage to the heating system.

A function test of the components should be carried out using the installation assistant within the framework of the start-up.

If you wish to leave the installation assistant:

⇒ Turn the left hand adjuster of the controller VRC 430 VRC 430f in a clockwise direction to reach the display screen A6.
⇒ Confirm the termination of the installation with "Yes".

Note!
If you have confirmed the end of the installation with "Yes" you can only access the installation assistant via the code-protected expert technician level (see installation instructions VRC 430 or VRC 430f).

7.2 VRC 430 / VRC 430f Operating level for the expert technician

The operating level for the expert technician serves to display and for the setting/modification of specific operating data. This will match the control system to the heating system in an optimum manner. This is advisable if the heating installation has other components in addition to the heating circuit 1 (HC 1) (e.g. heating circuit 2, hot water storage tank, ventilation system, solar system).

The operating level for the expert technician includes the display screens C1 to C26 and the display screens A1 to A6 of the previously described installation assistant.
Depending upon the configuration of the heating system, the display screens not required are hidden.

The display screens C1 to C26 in the controller VRT430 or VRC 430f in the same sequence as shown in the following Table 7.2.
This table shows which parameters can be adjusted and changed.

The following differences in the displat screens are produced by the installation of the mixer module VR 61 in the heating system with respect to the standard configuration as described in the manual for the VRC 430 or VRC 430f:
C2, C4, C10, C11, C15, C22, C23 and C26

Display screen	Title display screen	adjustable operating values (just display = A)	Remarks	Unit	Min. value	Max. value	Step width	Preset value
C1	HC1 Information	Feed set target (A)	Flow temperature target value	°C			1	
		Pump status (A)					On, Off	
		FBG connection / room actual value	Remote control connected? Room actual display	°C			Yes, no and 0.5	
C2	HC2 Information	Feed set target (A)	Flow temperature target value	°C			1	
		Actual feed VF2 (A)	Actual temperature feed sensor 2; does not appear if "Zone" selected in heating circuit mode HC2 in A2 (Hydraulic drawing 4)	°C			1	
		Mixer status (A)	does not appear if "Zone" selected in heating circuit mode HC2 in A2 (Hydraulic drawing 4)				Open, closed, off	
		Pump status (A)					On, Off	
		FBG connection / room actual value	Remote control connected? Room actual display	°C			Yes, no and 0.5	
C3	Hot water generator information	Installation sensor VF1 (A)	Actual value at the feed sensor 1 or the internal sensor of the heat generator	°C			1	
		Status flame heating unit (A)					Off, heating mode, hot water mode	
C4	Hot water information Values appear only if "active" is selected for storage tank in A2	Current hot water set target value (A)	Hot water set target temperature of the storage tank	°C			1	
		Storage probe 1 (A)	Hot water actual temperature of the storage tank	°C			1	
		Charging pump status (A)	appears only if in A3 for relay output"LP"has been selected				On, Off	
		Circulation pump status (A)					On, Off	
C8	HC1 parameters	Heating circuit type (A)	Status display				Heating circuit, inactive	
		Switch-on room temperature	selectable with wall mounting of the controller or remote control				none, intervention, thermostat	none
		Summer operation mode Offset	If the outside temperature > target room temperature + Summer Offset, the heating unit switches off	R	0	30	1	1

Table 7.2 Display screens in the level for the expert technician

Display screen	Title display screen	adjustable operating values (just display = A)	Remarks	Unit	Min. value	Max. value	Step width	Preset value
C9	HC1 parameters	Set-back temperature	For the times between the time windows you can set a set-back temperature. If your expert technician has set the frost protection function, the set-back temperature is automatically 5 °C. There will be no display as set-back temperature	°C	5	30	1	15
		Heating curve	in accordance with the diagram operating instructions Chapter 4.7.3		0,2	4	0,05-0,1	1,2
		Minimum temperature	Minimum feed temperature Heat zone 1	°C	15	90	1	15
C10	HC2 parameters	Heating circuit type (A)	Status display				Heating circuit inactive, Zone	
		Switch-on room temperature	selectable with wall mounting of the controller or remote control				none/Switch on/ Thermostat	none
		Summer operation mode Offset	If the outside temperature > target room temperature + Summer Offset, the heating unit switches off if, in A2, forheating cuircuit mode "Zone" is selected (hydraulic drawing 4) and for room switching "Thermostat" is selected, the values from HC1 are applicable for Summer Offset operation mode	R	0	30	1	1

Table 7.2 Display screens in the level for the expert technician (continuation)

Display screen	Title display screen	adjustable operating values (just display = A)	Remarks	Unit	Min. value	Max. value	Step width	Preset value
C11	HC2 parameters	Set-back temperature	For the times between the time windows you can set a set-back temperature. If your expert technician has set the frost protection function, the set-back temperature is automatically 5 °C. There will be no display as set-back temperature	°C	5	30	1	15
		Heating curve	in accordance with the diagram operating instructions Chapter 4.7.3 if, in A2, for heating circuit mode HC2 "Zone" is selected (hydraulic drawing 4) the value from HC1 for the heating curve is applicable		0,2	4	0,05-0,1	1,2
		Minimum temperature	Minimum feed temeprature for HC2; if, in A2, for heating circuit mode HC2 "Zone" is selected (hydraulic drawing 4) the value from HC1 for the minimum temperature is applicable	°C	15	90	1	15
		Maximum temperature	Maximum feed temeprature for HC2; does not appear if "Zone" selected in heating circuit mode HC2 in A2 (Hydraulic drawing 4)	°C	15	90	1	75
C15	Hot water parameters	Storage tank charging offset	In order to avoid short heating up periods (improved utilisation of condensing technology); appears only if in A3 for relay output"LP"has been selected	R	15	40	1	15
		Charging pump overrun	Only relevant if the charging pump is directly connected to the mixer module VR 61 (hydraulic drawing 2); appears only if in A3 for relay output"LP"has been selected	Mins.	0	10	1	5
		Parallel charging	does not appear if "Zone" selected in heating circuit mode HC2 in A2 (Hydraulic drawing 4)				On, Off	Off
C16	Hot water parameters	Legionella protection day	Weekday or block of days; Storage tank heated to 70 °C for one hour				OFF, MO, TU, WE, TH, FR, SA, SU, MO-SU	OFF
		Start legionella protection Time of the day			0:00	24:00	0:10	4:00

Table 7.2 Display screens in the level for the expert technician (continuation)

Display screen	Title display screen	adjustable operating values (just display = A)	Remarks	Unit	Min. value	Max. value	Step width	Preset value
C21	Total system parameters	Mode Auto_OFF	Determines the heating control outside the programmed time window				Frost protection, ECO, set-back	Frost protection
		Frost protection delay time	Delay time of the start of the frost protection function or the ECO function.	Hrs.	0	12	1	4
		Max. pump blocking time	If the feed set target temperature is achieved for a longer period of time, the heating is switched off for the prescribed pump blocking time (dependent upon the external temperature)	Mins.	Off, 5	60	1	15
C22	Total system parameters	Max. pre-heating time	Before the start of the first time window	Mins.	0	300	10	0
		Max. pre-switch off time	Before the end of a time window	Mins.	0	120	10	0
		AT through-heating	External temperature from which continuous through-heating takes place	°C	OFF, -25	+10	1	Off
		Excess temperature	Increases the set heating circuit target value this can, in certain circumstances, improve the control performance of the mixer; if, in A2, for heating circuit mode HC2 "Zone" is selected (hydraulic drawing 4) the value 0 for excess temperature is applicable	R	0	15	1	0
C23	Floor drying HC2 does not appear if "Zone" selected in heating circuit mode HC2 in A2 (Hydraulic drawing 4)	floor drying - day	See Section 7.3Function floor drying	Day	0	29	1	0
		floor drying/feed target value (A)	See Section 7.3Function floor drying	°C			in accordance with temperature profile	
C24	Service	Telephone number FHW	Entry of the telephone number for the service requirement					
		Changing the code number			0000	9999	each 1	1000
		Maintenance date	Day/Month/Year adjustable					
C25	Tools	Outside temperature correction	Matching of the external sensor	R	-5	5	1,0	0
		Correction room actual value	Matching the room temperature sensor	R	-3	3	0,5	0
		Display contrast			0	15	1	6
C26	Software versions	Software-Version VR 61 (A)	Display of version number					

Table 7.2 Display screens in the level for the expert technician (continuation)

7.3 Function floor drying

The floor-drying function is used to "heat dry" a freshly-laid heating layer according to instructions.

Note!
The floor drying function is only available for the controlled heating circuit (HC2)

If this function is activated, all selected operating modes are stopped.
The flow temperature of the controlled heating circuit is controlled according to a pre-set program regardless of the outside temperature.

Starting temperature: 25 °C

Days after starting the function	Target feed temperature for this day [°C]
1	25
2	30
3	35
4	40
5	45
6-12	45
13	40
14	35
15	30
16	25
17-23	10 (frost protection function, pump in operation)
24	30
25	35
26	40
27	45
28	35
29	25

Table 7.3 Temperature profile floor drying

The controller VRC 430 or VRC 430f shows, in the operating level for the expert technician, display screen C23, the operating mode for floor drying with the current day and the associated target feed temperature. The current day can be set manually.
When the function is started, the current time of the start is saved. The day is
changed exactly at this time.

8 VRC 430 / VRC 430f Operating level for the operator

The operating level for the operator serves to indicate and to adjust/modify the basic parameters. The setting/ changing of the parameters can be carried out by the operator without any special previous knowledge and during normal operation.
The parameters are shown in various display screens in the display area of the controller VRC 430 or VRC 430f . The operating concept is described in the operating and installation instructions of the controller VRC 430 or VRC 430f.

The following differences in the displat screens are produced by the installation of the mixer module VR 61 in the heating system with respect to the standard configuration as described in the manual for the VRC 430 or VRC 430f:

- Display screen G1 simplified basic display

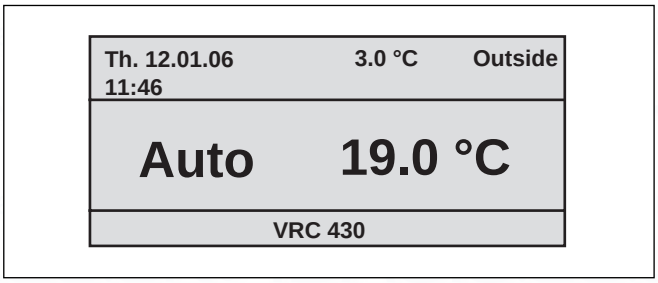

Fig. 8.1 Simplified basic display

Depending upon the adjustment method undertaken by the expert technician, this screen is either not displayed at all or shows the values from heating circuit 1 or 2.

⇒ Ask your expert technician for the current setting.

- Display screen G2 basic display

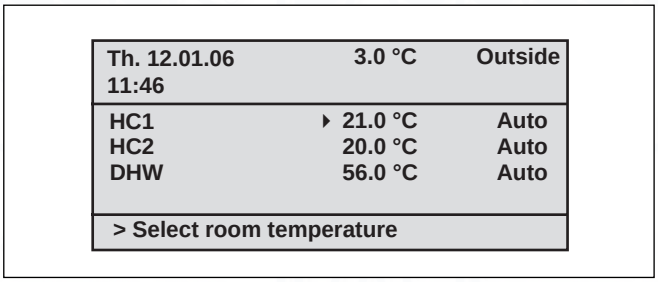

Fig. 8.2 Basic display

Both heating circuits (HC1 and HC2) are displayed in the basic display. For both heating circuits you can modify the target room temperature and the operating mode in each case.

– Display screen ☰ 3 HC2 Time programmes

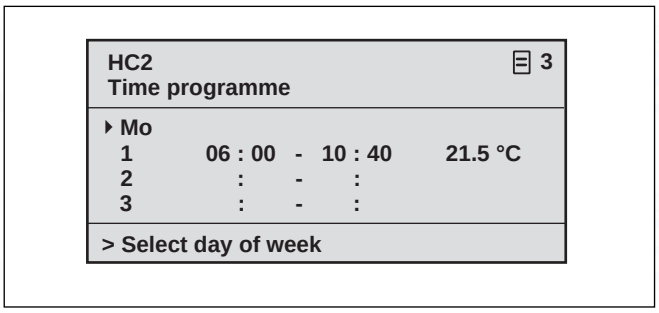

Fig. 8.3 Display screen ☰ 3 Display/input time programmes for heating circuit 2

Proceed as described in the operating and installation instructions for the controller VRC 430 or VRC 430f under Section 4.7.1 Entering time programmes.

– Display screen ☰ 9 HC2 parameters

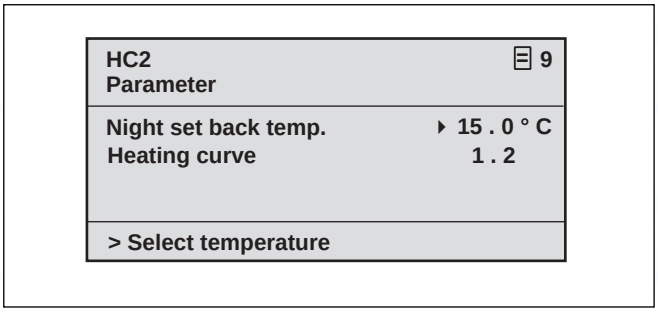

Fig. 8.4 Display screen ☰ 9 Display/input parameters for heating circuit 2

Proceed as described in the operating and installation instructions for the controller VRC 430 or VRC 430f under Section 4.7.3 Parameters for heating circuit

8.1 Display screens in the operating level for the operator

All the display screens in the operating level for the operator are summarised in the following Table 8.1. This table shows which parameters can be adjusted and changed.

Display screen	Title display screen	adjustable operating values (just display = A)	Remarks	Unit	Min. value	Max. value	Step distance Selection possibilities	Preset value
☰ 1	Basic data	Date Weekday Time of the day	Select Day, Month and Year separately; Select Hour and Minutes separately					
		Summer/winter changeover					Auto, Off	Off
☰ 2	HC1 time programmes	Day of week / week block	Select single weekday or block of days (e.g. Mo-Fr)					
		1 Start/End time of the day 2 3	Three time periods are available per day or block of days	Hours/ Minutes			10 min	
		Temperature each time period	For each time period, an individual room set target temperature can be determined	°C	5	30	0,5	20

Table 8.1 Display screens in the operating level for the operator

Display screen	Title display screen	adjustable operating values (just display = A)	Remarks	Unit	Min. value	Max. value	Step distance Selection possibilities	Preset value
3	HC2 timer programmes	Day of week / week block	Select single weekday or block of days (e.g. Mo-Fr)					
		1 Start/End time of the day 2 3	Three time periods are available per day or block of days	Hours/ Minutes			10 min	
		Temperature each time period	For each time period, an individual room set target temperature can be determined	°C	5	30	0,5	20
4	Hot water time programme	Day of week / week block	Select single weekday or block of days (e.g. Mo-Fr)					
		1 Start/End time of the day 2 3	Three time periods are available per day or block of days	Hours/ Minutes			10 min	
5	Circulation pump time programmes	Day of week / week block	Select single weekday or block of days (e.g. Mo-Fr)					
		1 Start/End time of the day 2 3	Three time periods are available per day or block of days	Hours/ Minutes			10 min	
7	Holiday programming of the entire system	Holiday period	Start Day, Month, Year End Day, Month, Year					
		Holiday set target value heating	Room set target temperature for holiday period	°C	Frost protection, or 5	30	0,5	Frost protection
8	HC1 parameters	Set-back temperature	For the times between the time windows you can set a set-back temperature. If your expert technician has set the frost protection function, the set-back temperature is automatically 5 °C. There will be no display as set-back temperature	°C	5	30	0,5	15
		Heating curve	The feed temperature of the heating is controlled in dependence of the external temperature This relationship is represented in curves. You can select various heating curves.		0,2	4	0,05-0,1	1,2

Table 8.1 Display screens in the operating level for the operator (continued)

Display screen	Title display screen	adjustable operating values (just display = A)	Remarks	Unit	Min. value	Max. value	Step distance Selection possibilities	Preset value
9	HC2 parameters	Set-back temperature	For the times between the time windows you can set a set-back temperature. If your expert technician has set the frost protection function, the set-back temperature is automatically 5 °C. There will be no display as set-back temperature	°C	5	30	0,5	15
		Heating curve	The feed temperature of the heating is controlled in dependence of the external temperature This relationship is represented in curves. You can select various heating curves.		0,2	4	0,05-0,1	1,2

Table 8.1 Display screens in the operating level for the operator (continued)

9 Technical data

	Unit	VR 61
Operating voltage Power consumption Contact load of the output relays (max.) Maximum total current	V VA A A	230 4 2 4
Maximum permissible ambient temperature	°C	40
Operating voltage sensor	V	5
Minimum cross-section of the sensor cables, eBUS cables Minimum cross-section of power cable (rigid cable, NYM)	mm^2 mm^2	0,75 1,5
Dimensions of wall mounting base Height Width Depth	 mm mm mm	 174 272 52
Level of protection Protection rating for regulator		IP 20 II

Table 9.1 Technical data

spares & parts online
IBASIS.CO.UK

spares & parts online IBASIS.CO.UK

Vaillant Ltd
Vaillant House ▪ Medway City Estate ▪ Trident Close ▪ Rochester ▪ Kent ME2 4EZ
Telephone 01634 292300 ▪ Fax 01634 290166 ▪ www.vaillant.co.uk ▪ info@vaillant.co.uk

0020044359_00 GB 042007