For the operator / for the heating engineer

Operating and Installation Manual

Solar module VR 68

Solar module for VRC 430/VRC 430f

GB

spares & parts online IBASIS.CO.UK

Contents

1 Notes on the documentation ... 3
1.1 Storage of the documents ... 3
1.2 Symbols used ... 3
1.3 Validity of the instructions ... 3

2 Description of the device ... 4
2.1 System overview ... 4
2.2 Identification plate ... 4
2.3 CE-mark/conformity ... 4
2.4 Intended use ... 4

3 Safety instructions and regulations ... 5
3.1 Safety instructions ... 5
3.2 Regulations ... 5

4 Incorporation of the VR 68 into the solar heating system ... 6
4.1 Hydraulic diagram 1 ... 8
4.2 Hydraulic diagram 2 ... 9
4.3 Hydraulic diagram 3 ... 10
4.4 Hydraulic diagram 4 ... 12

5 Assembly ... 14
5.1 Scope of delivery ... 14
5.2 Mounting the VR 68 solar module ... 14
5.3 Assembling VR 10 standard sensor ... 15
5.4 Mounting the VR 11 collector sensor ... 15

6 Electrical installation ... 16
6.1 Connecting the VR 68 solar module ... 16

7 Start-up ... 18
7.1 Installation assistant ... 18
7.2 VRC 430/VRC 430f Operation level for the expert technician ... 19

8 VRC 430/VRC 430f Operation level for the operator ... 23
8.1 Optimising the solar yield ... 23
8.1.1 Optimisation at the operation level for the operator ... 23
8.1.2 Optimisation at the operation level for the expert technician ... 24

9 Technical data ... 24

10 Manufacturer's guarantee and works customer service ... 24

Glossary ... 25

1 Notes on the documentation

The following notes are intended to help you throughout the entire documentation.
Further documents apply in combination with this operating and installation manual.
We accept no liability for any damage caused by failure to observe this manual.

Other applicable documents
- The operating and installation instructions for the VRC 430 or VRC 430f
- The operating and installation manuals of the heating system
- All instructions for the accessories

The following chapters are intended for the **expert technician**:
- 4 Incorporation of the VR 68 solar module into the solar heating system
- 5 Assembly
- 6 Electrical installation
- 7 Start-up

The following Chapter is intended for the **operator**:
- 8 VRC 430/VRC 430f Operating level for the operator

1.1 Storage of the documents

For the heating engineer:
Please pass on this operating and installation manual to the owner of the system

For the user:
Store the documents carefully so that the manual is close at hand if required.

1.2 Symbols used

Observe the safety information in this manual when installing and using the unit!

Danger!
Danger of death by electric shock!

Danger!
Immediate risk of serious injury or death!

Attention!
Danger of burning and scalding!

Caution!
Potentially dangerous situation for the product and environment!

Note!
Useful information and instructions.

⇒ **Symbol for a necessary task**

1.3 Validity of the instructions

This operating and installation instruction manual is only applicable to equipment with the following part numbers:
0020028533; 0020028535; 0020028534; 0020028536

For the heating engineer:
For the article number of your unit please refer to the identification plate. Inform the operator what the article number is.

For the user:
ask your expert technician what the article number of the solar module is.

2 Description of the device

The VR 68 solar module is used to expand the VRC 430 or VRC 430f controllers.

Different configurations of the solar heating system can be realised using the VR 68 solar module.
The four basic configurations correspond to the four hydraulic diagrams that are described in more detail in the Chapter entitled "Incorporating the VR 68 into the solar heating system".

Further, the solar yield can be determined using the VR 68 solar module in conjunction with the VRC 430 or VRC 430f controller.

The VR 68 solar module can be combined with the VR 61 mixer module within a solar heating system. Two heating circuits can be controlled using the VR 61 mixer module in conjunction with the VRC 430 or VRC 430f controller.

2.1 System overview

The basic equipment for the heating system consists of the following components:
- one VRC 430/VRC 430f controller that monitors all functions of the heating system,
- one boiler,
- one heating circuit that is an enclosed system which can generally be controlled separately and serves the distribution of heat for heating. The heating circuit includes all the elements involved in the production and transport of heating heat, such as pipes, underfloor heating coils, radiators, etc.
- domestic hot water cylinder or combi storage tank that can be heated by two different sources – the solar collector and the boiler. The latter reheats the water in the event of insufficient solar radiation.

The heating system can be expanded using other optional components:
- a VR 61 mixer module is used to expand the VRC 430 or VRC 430f controller system to create a secondary heating circuit and allows the heating system to be configured in a number of different ways,
- a VR 81 remote control for separate room temperature control of a secondary heating circuit,
- a solar collector panel that absorbs solar radiation,
- a VR 68 solar module that integrates a solar system into the VRC 430/VRC 430f control concept.

2.2 Identification plate

The identification plate of the VR 68 solar module is on the inside of the housing cover.

2.3 CE-mark/conformity

The CE label documents that the VR 68 mixer module in conjunction with Vaillant heating units fulfils the basic requirements of the following guidelines:
- Guideline on electrical equipment to be used within specific voltage ranges (Directive 2006/95/EC)
- Electromagnetic compatibility directive (Directive 89/336/EEC)

2.4 Intended use

The VRT 68 solar module is a state-of-the-art device which has been constructed in accordance with the standard safety regulations. Nevertheless, there is still a risk of death or serious injury to the user or others or of damage to the device and other property in the event of improper use or use for which it is not intended.
The VR 68 solar module is a system component that is used in conjunction with the VRC 430 or VRC 430f to control a solar system with the following elements:
- a solar circuit
- a solar hot water cylinder
- a second solar cylinder (e.g. swimming pool) or second differential control (optional)
- a legionella protection pump

Any other use or extended use is considered to be use other than intended. The manufacturer or supplier is not liable for any resulting damage. The owner alone bears any risk.
Intended use also includes observance of the operating and installation manual and all other applicable documents.

3 Safety instructions and regulations

The VRT 68 solar module must be installed by a recognised expert technician company that is also responsible for ensuring that existing standards and regulations are observed.
We accept no liability for any damage caused by failure to observe these instructions.

3.1 Safety instructions

Danger!
Danger due to live connections!
When working on the open VR 68 mixer module and also inside the boiler's electronic box there is a danger of potentially fatal electric shock.
Switch off the power supply and prevent it from being unintentionally switched back on before carrying out work on the VR 68 solar module and inside the electronic box of the boiler.
Switch off the power supply at the VR 68 solar module via the mains switch. The green LED on the PCB of the VR 68 solar module must not light up.

Danger!
Risk of scalding by hot water!
The temperature of the solar hot water cylinder can reach temperatures that are considerably higher than 60 °C (not only due to the solar heating, but also the legionella protection function if it is active).
Make absolutely sure that your expert technician installs a mixer valve with cold water supply (see hydraulic diagram).
Have the mixer valve adjusted by your expert technician.

3.2 Regulations

Standard wires must be used for wiring.
230 V lines must be sheathed cables (e.g. NYM 3x1.5).
Flexible cables must not be used for 230 V lines.

Minimum cross-section of the wires:
- Connection line 230 V (pumps or multifunction relay output) 1.5 mm²
- Low-voltage leads (sensor or Bus leads) 0.75 mm²

The following maximum cable lengths must not be exceeded:
- Sensor connection 50 m
- Bus lead 300 m

Where sensor and BUS lines run parallel with 230 V cables for more than 10 m, they must be routed separately.
All connection lines must be fastened inside the casing using the enclosed cable brackets.
Do not use free terminals of the appliances as support terminals for other wiring.

The VR 68 solar module must be installed in dry rooms.

All wiring must be in accordance with Building Regulations Part P and BS 7671 (IEE Wiring Regulations), and must be carried out by a suitably qualified person.

4 Incorporation of the VR 68 into the solar heating system

The possible applications of the VR 68 solar module are shown in the four hydraulic diagrams.

The VR 68 solar module can be combined with the VR 61 mixer module within a solar heating system. Two heating circuits can be controlled using the VR 61 mixer module in conjunction with the VRC 430 or VRC 430f controller.

Hydraulic diagram 1
- a wall-mounted boiler
- an uncontrolled heating circuit
- a solar circuit
- a bivalent solar hot water cylinder
- reheating of bivalent solar hot water cylinder using preference switching valve (VUV)
- circulation pump for hot water controlled by VR 40
- a legionella protection pump

Hydraulic diagram 2
- a boiler (floor-mounted unit)
- an uncontrolled heating circuit
- a solar circuit
- a bivalent solar hot water cylinder
- charging pump for reheating bivalent solar hot water cylinder; controlled via boiler
- circulation pump for hot water controlled by VR 40
- a legionella protection pump

Hydraulic diagram 3
- a wall-mounted boiler
- an uncontrolled heating circuit
- a solar circuit
- a bivalent solar hot water cylinder
- reheating of bivalent solar hot water cylinder using preference switching valve (VUV)
- circulation pump for hot water controlled by VR 40
- a legionella protection pump
- 3-way changeover valve for heating a swimming pool using solar energy

Hydraulic diagram 4
- a boiler (floor-mounted unit)
- an uncontrolled heating circuit
- a solar circuit
- a bivalent solar hot water cylinder
- charging pump for reheating bivalent solar hot water cylinder; controlled via boiler
- circulation pump for hot water controlled by VR 40
- a legionella protection pump
- 3-way changeover valve for heating a swimming pool using solar energy

The following applies for all hydraulic diagrams:

Danger!
Risk of scalding by hot water!The solar hot water cylinder can reach temperatures that are considerably higher than 60 °C (not only due to the solar heating, but also the legionella protection function if it is active).
Make absolutely sure that your expert technician installs a mixer valve with cold water supply.
Have the mixer valve adjusted by your expert technician.

The following conventions apply in the hydraulic diagrams:

Lines:

Representation	Meaning
.....	eBUS line twin core
- — - — - -	Sensor line low voltage
———	Control line 230 V~
▬▬▬	Heating feed, collector or swimming pool
▬ ▬ ▬ ▬	Heating return, collector or swimming pool
═══	Hot water feed/return, infeed

Table 4.1 Depiction of lines in the hydraulic diagrams

Designations:

Nomenclature	Meaning
AF	External sensor (with VRC 430: VRC 693/ VRC 9535; with VRC 430f: VR20/ VR21)
Yield (Ertrag)	Solar yield sensor (VR 10)
HK-P	Pump for heating circuit
KOL 1-P	Solar pump
KOL 1	Collector sensor (VR11)
LEG-P	Legionella protection pump
LP	Charging pump for storage tank
MA	3-way changeover valve
SP 1	Cylinder sensor 1 (VR10)
SP 2	Cylinder sensor 2 (VR10)
TD 1	Sensor for swimming pool (VR 10) in immersion sleeve
TD 2	Sensor for differential control 2 (VR 10) (see note below)
VR 40	Additional module (integrated in heating equipment)
ZP	Circulation pump for hot water

Table 4.2 Designations used in hydraulic diagrams

Note:
Sensor TD 2 is only used to realise an optional additional differential temperature control (TD 1 - TD 2) in conjunction with sensor TD 1 and multifunction relay output MA. Observe that the specific configuration which is necessary with this hydraulic variant can be carried out with the aid of the installation assistant (also see Section 7.1):
The "differential control" option must be selected under "MF relay" on display screen A4. The corresponding hydraulic diagram is not shown here. It is then no longer possible to heat a swimming pool using solar energy.

4.1 Hydraulic diagram 1

- a wall-mounted boiler
- an uncontrolled heating circuit
- a solar circuit
- a bivalent solar hot water cylinder
- reheating of bivalent solar hot water cylinder using preference switching valve (VUV)
- circulation pump for hot water controlled by VR 40
- a legionella protection pump

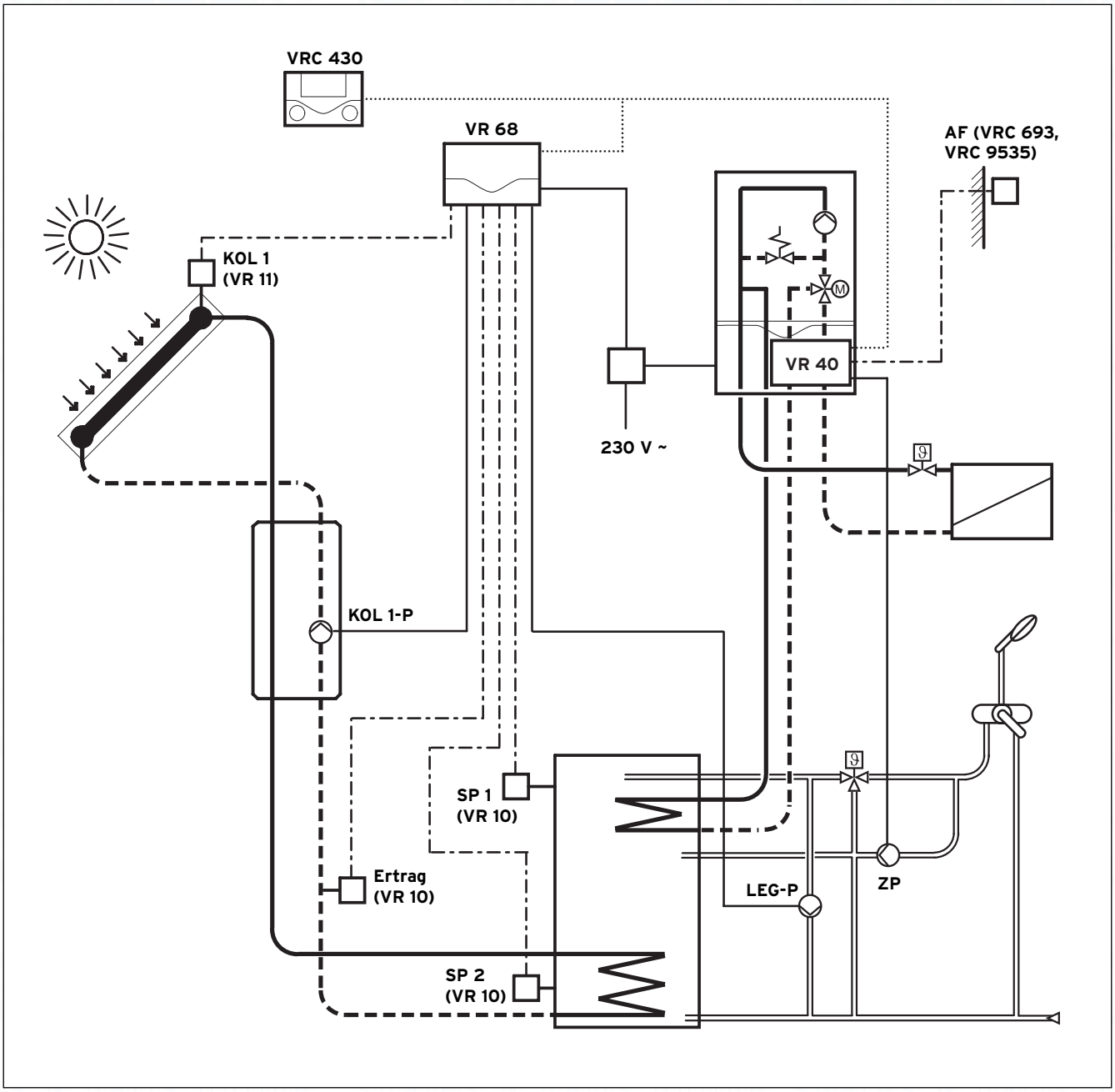

Fig. 4.1 Hydraulic diagram 1

4.2 Hydraulic diagram 2

- a boiler (floor-mounted unit)
- an uncontrolled heating circuit
- a solar circuit
- a bivalent solar hot water cylinder
- charging pump for reheating bivalent solar hot water cylinder; controlled via boiler
- circulation pump for hot water controlled by VR 40
- a legionella protection pump

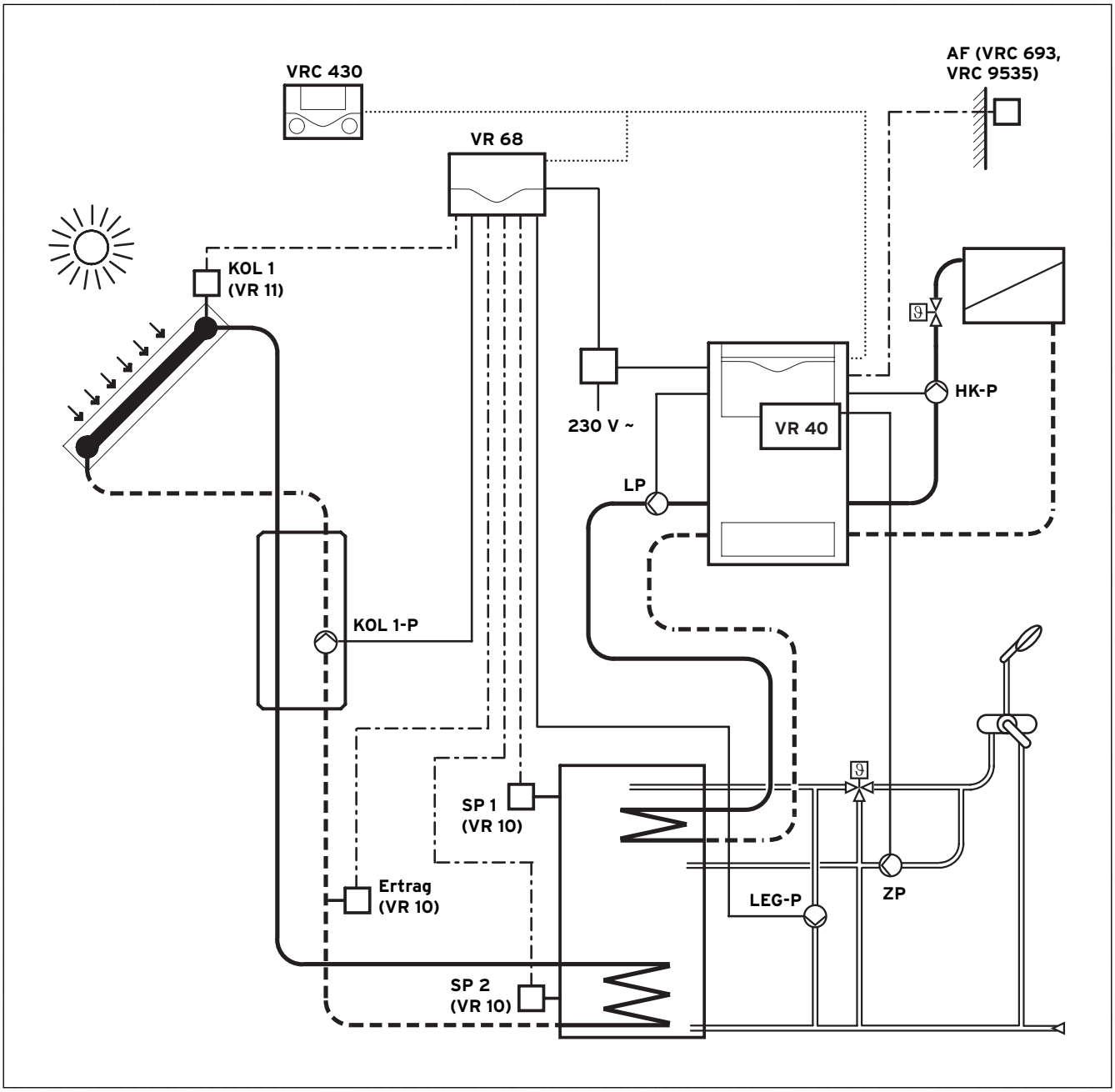

Fig. 4.2 Hydraulic diagram 2

4.3 Hydraulic diagram 3

- a wall-mounted boiler
- an uncontrolled heating circuit
- a solar circuit
- a bivalent solar hot water cylinder
- reheating of bivalent solar hot water cylinder using preference switching valve (VUV)
- circulation pump for hot water controlled by VR 40
- a legionella protection pump
- 3-way changeover valve for heating a swimming pool using solar energy

---

☞ **Note!**
Observe that the specific configuration which is necessary for hydraulic diagram 3 can be carried out with the aid of the installation assistant (also see Chapter 7.1):
The "2nd cylinder" option must be selected under "MF relay" on display screen A4.

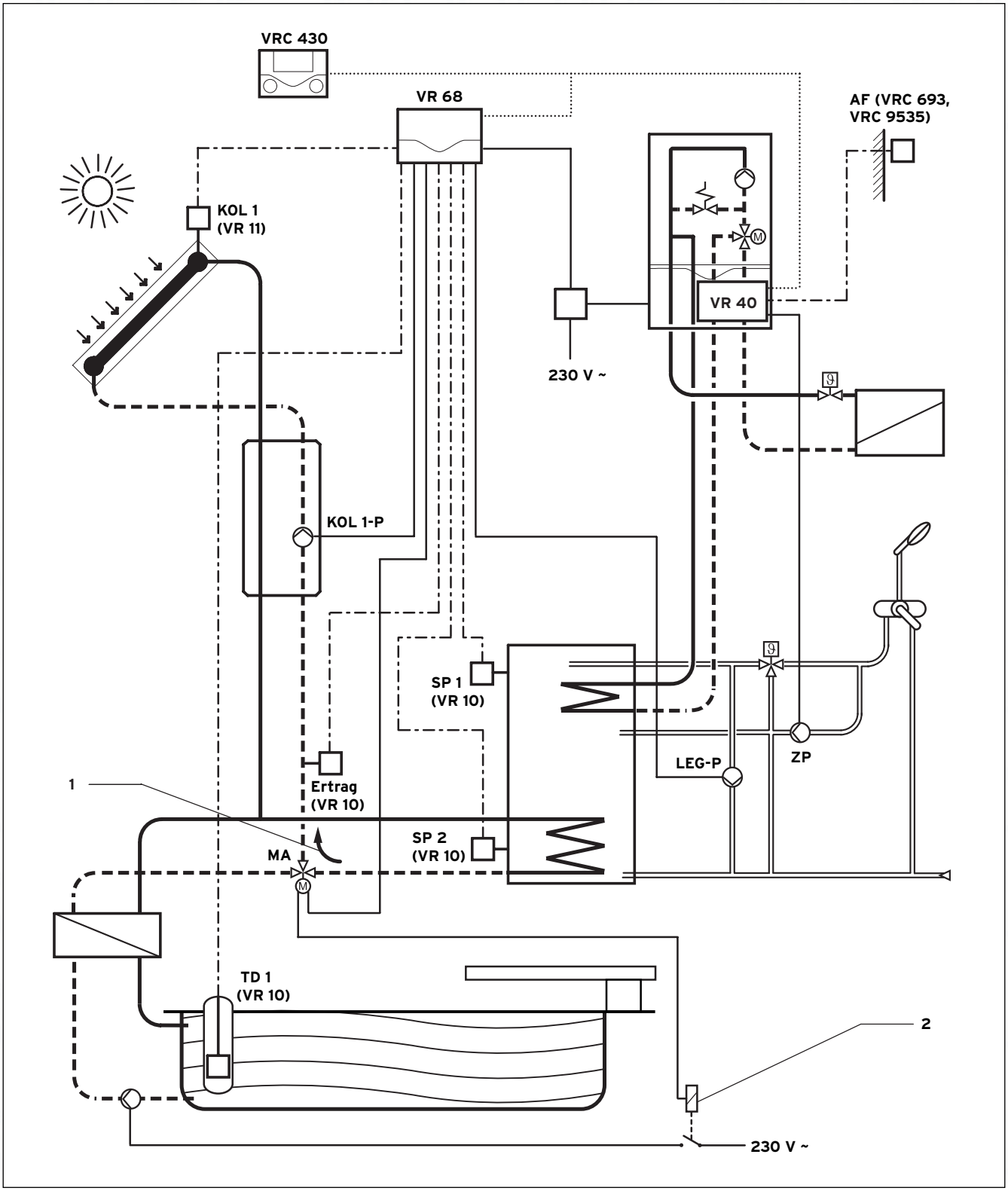

Fig. 4.3 Hydraulic diagram 3

Key

1 Direction of flow, if 3-way changeover valve is de-energised

2 Solenoid valve activates swimming pool pump if 3-way changeover valve is energised

4.4 Hydraulic diagram 4

- a boiler (floor-mounted unit)
- an uncontrolled heating circuit
- a solar circuit
- a bivalent solar hot water cylinder
- charging pump for reheating bivalent solar hot water cylinder; controlled via boiler
- circulation pump for hot water controlled by VR 40
- a legionella protection pump
- 3-way changeover valve for heating a swimming pool using solar energy

---

☞ **Note!**
Observe that the specific configuration which is necessary for hydraulic diagram 4 can be carried out with the aid of the installation assistant (also see Chapter 7.1): The "2nd cylinder" option must be selected under "MF relay" on display screen A4.

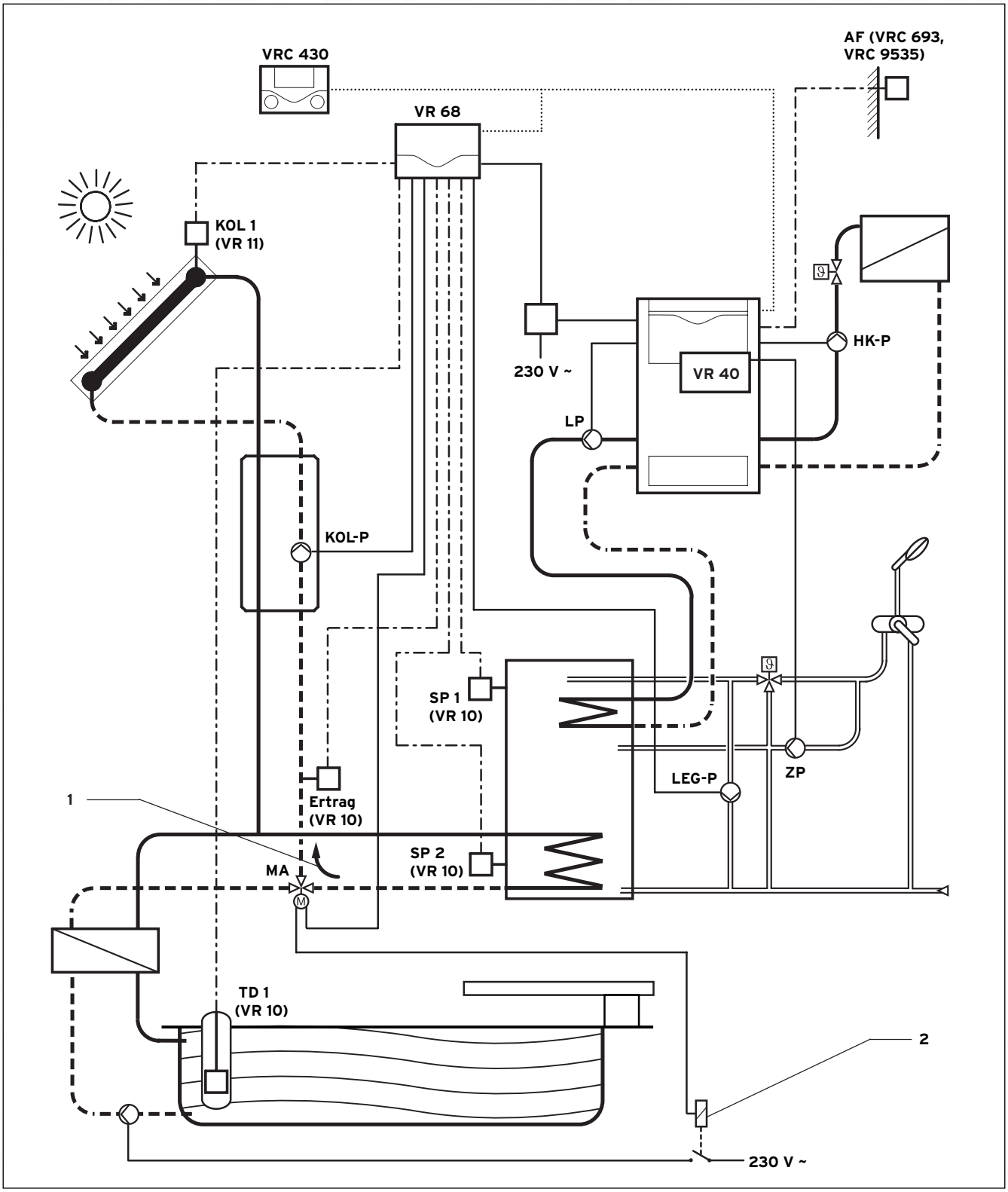

Fig. 4.4 Hydraulic diagram 4

Key

1 Direction of flow, if 3-way changeover valve is de-energised

2 Solenoid valve activates swimming pool pump if 3-way changeover valve is energised

5 Assembly

The VR 68 solar module is mounted on a wall near the corresponding functional units.
The adjustment of all required parameters is carried out using the controller VRC 430 or VRC 430f via eBUS.
All connections for the associated functional units are established directly at the VR 68 solar module via ProE terminals.

5.1 Scope of delivery

Before starting the installation, check the scope of delivery for completeness and lack of damage.

Pos.	Number	Component
1	1	Solar module VR 68
2	3	Feed sensor VR 10
3	1	Collector sensor VR 11
4	1	Mounting accessories (screws, plugs)

Table 5.1 Scope of delivery of the VR 68 solar module

Note!
Depending on how the solar heating system is configured, additional feed and cylinder sensors may be required.
Only the standard sensor VR 10 from the Vaillant accessories programme should be used. The heating control using Vaillant components is matched to the sensor characteristic curve of the VR 10.

Temp. in °C	R in kOhm	Temp. in °C	R in kOhm
10	5.363	55	0.806
15	4.283	60	0.671
20	3.372	65	0.562
25	2.700	70	0.473
30	2.176	75	0.399
35	1.764	80	0.339
40	1.439	85	0.288
45	1.180	90	0.247
50	0.973		

Table 5.2 Standard sensor VR 10, allocation temperature measurement value

Temp. in °C	R in kOhm	Temp. in °C	R in kOhm
15	15.694	70	1.753
20	12.486	75	1.481
25	10.000	80	1.256
30	8.060	85	1.070
35	6.535	90	0.916
40	5.330	95	0.786
45	4.372	100	0.678
50	3.605	105	0.586
55	2.989	110	0.509
60	2.490	115	0.443
65	2.084	120	0.387

Table 5.3 Collector sensor VR 11, allocation of temperature measured value

5.2 Mounting the VR 68 solar module

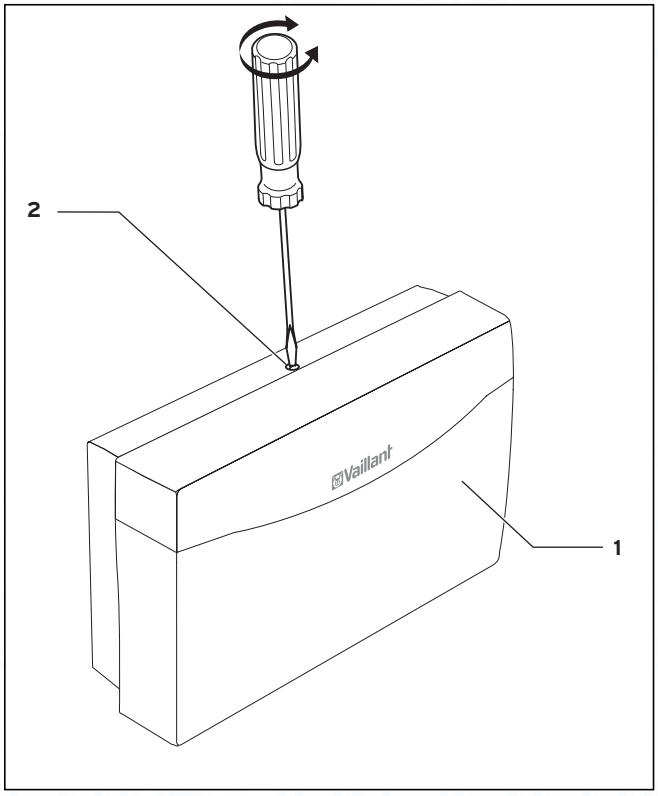

Fig. 5.1 Opening the casing

Key
1 Casing cover
2 Bolt

⇒ Unfasten the bolt (**2**) on the top of the casing.
⇒ Tilt the casing cover (**1**) forwards slightly and remove it.

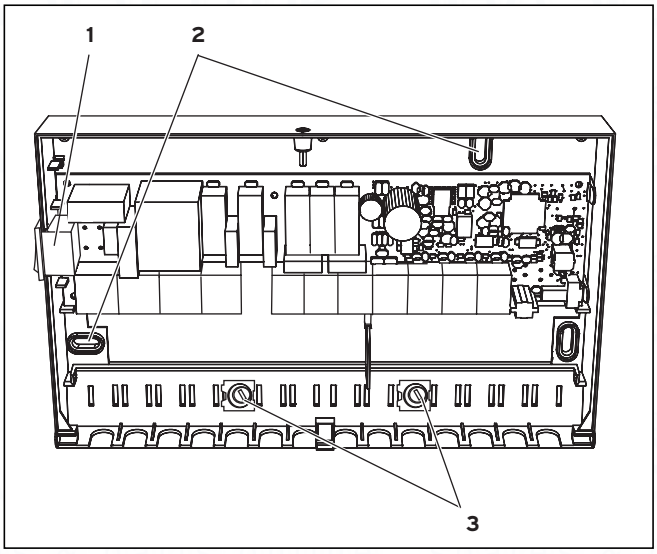

Fig. 5.2 Fitting the VR 68 solar module

Key
1 Mains switch
2 Mounting apertures
3 Cable brackets

⇒ Mark the two fixing points in a suiTable location to match the fixing holes (2**).**
⇒ Drill two holes for the wall plugs and screw the casing on securely.
⇒ The electrical installation is carried out as described in Chapter 6.
⇒ Reinsert the casing cover in the hinges and fold it up.
⇒ Screw on the casing cover as shown in Fig. 5.1.

5.3 Assembling VR 10 standard sensor

The VR 10 standard sensor is designed so that it can be used as a cylinder sensor, yield sensor or immersion sensor in an immersion sleeve, e.g. in a swimming pool. The VR 10 can be used as a yield sensor by fastening it to the collector return using the enclosed tensioning band.
We recommend that the pipe with the sensor is insulated to ensure optimum temperature measurements.

5.4 Mounting the VR 11 collector sensor

A description of how to mount the VR 11 collector sensor is provided in the installation instructions for the solar collectors.

6 Electrical installation

The electrical connection must be established by a recognised expert technician who is also responsible for complying with existing standards and guidelines.

Danger!
Danger due to live connections!
When working on the open VR 68 mixer module and also inside the boiler's electronic box there is a danger of potentially fatal electric shock.
Switch off the power supply and prevent it from being unintentionally switched back on before carrying out work on the VR 68 solar module and inside the electronic box of the boiler.
Switch off the power supply at the VR 68 solar module via the mains switch. The LED (green) on the PCB of the VR 68 solar module must not light up.

If the casing of the VR 68 solar module is closed, open it as described in Chapter 5.2.

6.1 Connecting the VR 68 solar module

The mains infeed up to the VR 68 solar module is to be provided on the customer side.
The eBUS connection to the VR 68 solar module can be established by taking a branch from any desired point in the eBUS system (see Fig. 6.1).

⇒ Wire the connection of the VR 68 solar module as shown in Fig. 6.2.

Note!
The cables required to establish the 230 V mains connection and e-BUS connection are not included in the scope of delivery.

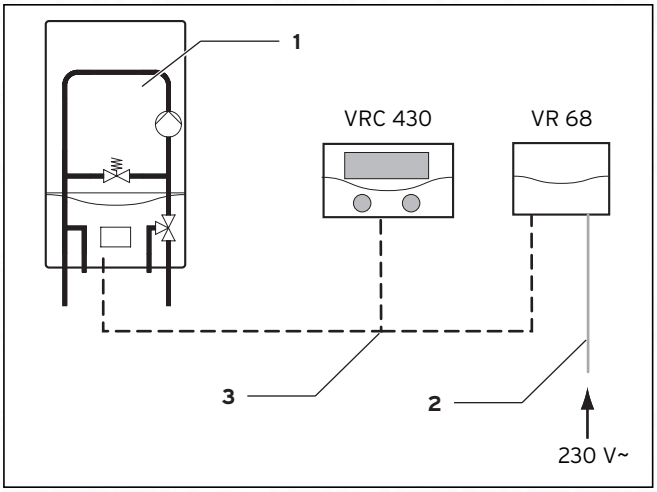

Fig. 6.1 Connection of mains cable and eBUS to system (boiler)

Key
1 Heating unit
2 230 V line on customer side
3 eBUS connection (twin core)

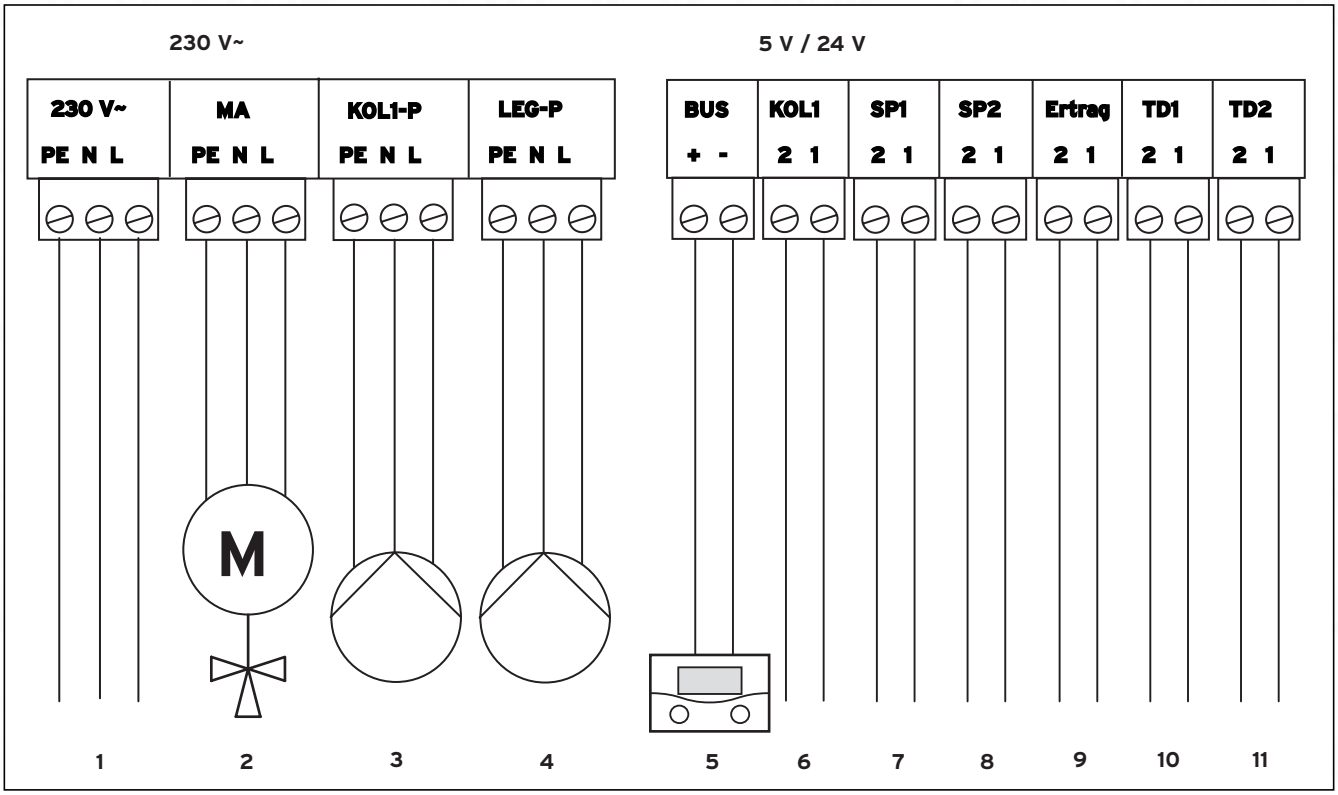

Fig. 6.2 Terminal assignment of VR 68 solar module

Key

1 Mains connection
2 Multifunction relays for swimming pool changeover valve or additional differential control (restructuring, heating support)
3 Solar pump
4 Legionella protection pump
5 Connection, eBUS connection
6 Collector sensor 1
7 Cylinder sensor 1
8 Cylinder sensor 2
9 Sensor for yield measurement
10 Sensor TD 1 for swimming pool or additional differential control
11 Sensor TD 2 for additional differential control

Note!
If the VR 68 solar module is integrated into a system with a VRC 430 or VRC 430f controller, the multifunction relay is configured via the installation assistant of the VRC 430 or VRC 430f controller.

After connecting the electrical installation:

⇒ Secure all cables using the cable brackets provided (see Fig. 5.2).
⇒ Reinsert the casing cover into the hinges at the bottom and fold the casing cover up.
⇒ Screw on the casing cover as shown in Fig. 5.1.

7 Start-up

The VR 68 solar module is commissioned at the same time as the VRC 430 or VRC 430f controller.
Proceed in accordance with the instructions in the manual of the VRS 430 or VRC 430f controller.

7.1 Installation assistant

When commissioning for the first time you will be supported by the installation assistant.
The most important heating system parameters can be entered via the installation assistant.
The installation of the VR 68 solar module in the heating system results in number of changes to the standard configuration as described in the manual for the VRC 430 or VRC 430f:

Display screen A4

Installation assistent **Solar circuit**		**A4**
Flow rate **Litre/minute**		**3.5**
MF-Relay	**2nd Cylinder**	
Solar pump kick		**OFF**
Solar circ. protect.		**130 °C**

Fig. 7.1 Installation assistant display screen A4

Display screen A4 shows the configuration of the solar circuit.
You can adjust the rate in l/min at which the solar fluid passes through the system under "Flow rate".
You can select the option Cylinder 2 (corresponds to swimming pool) or the option Differential control 2 (additional) under "MF relay".

Note!
If the solar heating system is designed in accordance with hydraulic diagram 3 or 4 (swimming pool), "Cylinder 2" must be selected at "MF relay".

Depending on the collector type used, select the following:
- for flat collectors: **Solar pump kick** = OFF
- for tube collectors: **Solar pump kick** = ON.

The solar pump kick or tube collector function optimises recording of the tube collector temperature as well as charging or changeover where two cylinders are used. This function should only be activated where tube collectors are used!
To protect the solar circuit from overheating you can use the solar circuit protection function to specify the temperature of the collector at which the solar pump switches off.

Display screen A5

Installation assistant **Module test**		**A5**
Module selection		**VR 68**
Sensors	▸	**KOL1**
Actuators		**MA**
Heating appliance		**OFF**
> select		

Fig. 7.2 Installation assistant display screen A5

You can select the components for functional testing on display screen A5 of the installation assistant (components are actuated briefly).
It is a pre-requisite that "VR 68" is selected as the module selection.

Sensors		Actuators	
KOL1	Collector sensor	MA	Multifunction relay
SP1	Cylinder sensor 1	KOL1-P	Solar pump
SP2	Cylinder sensor 2	LEG-P	Legionella protection pump
Yield	Yield sensor		
TD1	Sensor for swimming pool or additional differential control		
TD2	Sensor for additional differential control		

Table 7.1 Components for function test in display screen A5

Caution!
Improper installation/assembly may lead to damage in the solar heating system.
Perform a function test of the components using the installation assistant as part of the start-up procedure.

If you wish to exit the installation assistant:
⇒ Turn the left hand adjuster of the VRC 430/ VRC 430f controller in a clockwise direction to reach display screen A6.
⇒ Confirm the end of the installation with "Yes".

Note!
If you have confirmed the end of the installation with "Yes" you can only access the installation assistant via the code-protected expert technician operation level (see installation instructions for VRC 430 or VRC 430f).

7.2 VRC 430/VRC 430f Operation level for the expert technician

Specific operating data can be displayed and adjusted/ changed at the expert technician operation level. This means that the control system can be perfectly matched to the solar heating system.

The operation level for the expert technician contains display screens A1 to A6 in the installation assistant and also display screens C1 to C26.
Depending on the configuration of the solar heating system, display screens that are not required are hidden.

The display screens C1 to C26 in the controller VRT430 or VRC 430f in the same sequence as shown in the following Table 7.2.
This Table shows you which parameters you can adjust and change.

The installation of the VR 68 solar module in the solar heating system results in a number of changes to the standard configuration as described in the manual for the VRC 430 or VRC 430f; these changes apply for the following display screens:
C5, C6, C12, C13, C14, C15, C17 and C26.

Display screen	Title screen	Adjustable operating values (only display = A)	Remarks	Unit	Min. value	Max. value	Increment or possible values	Preset value
C1	HC1 Information	Target flow temperature (A)	Flow temperature target value	°C			1	
		Pump status (A)					On, Off	
		Remote control	Remote control connected? Room actual display	°C			Yes, no and 0.5	
C3	Hot water information	Sensor VF1 (A)	Actual value at the feed sensor 1 or the internal sensor of the heat generator	°C			1	
		Boiler status (A)					Off, CH mode, WW operation	
C4	Hot water information	Hot water target value (A)	Hot water set target temperature of the storage tank	°C			1	
		Cylinder sensor 1 (A)	Actual temperature of hot water at top of cylinder	°C			1	
		Circulation pump status (A)					On, Off	
C5	Solar circuit information	Collector sensor 1 (A)	Temperature of solar fluid at collector sensor 1 (collector feed)	°C	< 25 °C (for temp. < 25 °C)		1	
		Cylinder sensor 2 (A)	Actual temperature of hot water at bottom of cylinder	°C			1	
		Yield sensor (A)	Temperature of solar fluid at yield sensor (collector return)	°C			1	
		Status of solar pump 1 (A)					On, Off	
C6	Solar circuit information The value of sensor TD2 is only displayed if the differential control option under multifunction relay (MA) in screen A4 has been selected	Sensor TD1 (A)	Actual temperature of cylinder 2 (swimming pool) or TD1 with additional differential control	°C			1	
		Sensor TD2 (A)	Actual temperature of TD2 with additional differential control	°C			1	
		Multifunction relay (A)	Assignment of multifunction relay				2nd cylinder, differential control system	
		Status of multifunction relay (A)					On, Off	
C8	HC1 parameters	Heating circuit type (A)	Status display				Heating circuit, inactive	
		Switch-on room temp	SelecTable with wall mounting of the controller or remote control				none, intervention, thermostat	none
		Summer operation mode Offset	If outdoor temperature > room target temperature + summer offset, the appliance switches off	R	0	30	1	1

Table 7.2 Display screens in the level for the expert technician

Display screen	Title screen	Adjustable operating values (only display = A)	Remarks	Unit	Min. value	Max. value	Increment or possible values	Preset value
C9	HC1 parameters	Set-back temperature	A night set back temp can be specified for the periods between the time windows. If the expert technician has set the frost protection function, the set-back temperature is automatically 5 °C. There will be no display as set-back temperature	°C	5	30	1	15
		Heating curve	in accordance with the diagram operating instructions Chapter 4.7.3		0.2	4	0.05-0.1	1.2
		Minimum temperature	Minimum feed temperature HC1	°C	15	90	1	15
C12	Parameters Solar cyl. 1	Maximum temperature Cylinder 1		°C	20	90	1	
		Activation difference Cylinder 1		R	2	25	1	
		Deactivation difference Cylinder 1		R	1	20	1	
C13	Parameters Solar cyl. 2 "Cylinder 2" must be selected at multifunction relay in A4. If a swimming pool is used as "Cylinder 2", the default values must be adapted.	Maximum temperature Cylinder 2		°C	20	90	1	65
		Activation difference Cylinder 2		R	2	25	1	7
		Deactivation difference Cylinder 2		R	1	20	1	3
		Master cylinder	has priority over cylinder being supplied	Cylinder			1, 2	1
C14	Parameters Diff. control The "differential control" option must be selected in A4 at multifunction relay.	Activation difference Diff. control 2		R	2	25	1	7
		Deactivation difference Diff. control 2		R	1	20	1	3
C15	Hot water parameters	Storage tank charging offset	Target feed temperature during recharging = target temperature of cylinder + Recharging offset	R	15	40	1	25
C16	Hot water parameters	Legionella protect day	Day or block of days; The cylinder is heated up to 70°C for an hour				OFF, MO, TU, WE, TH, FR, SA, SU, MO-SU	OFF
		Start time of Legionella protection			0:00	24:00	0:10	4:00

Table 7.2 Display screens in the level for the expert technician (continuation)

Display screen	Title screen	Adjustable operating values (only display = A)	Remarks	Unit	Min. value	Max. value	Increment or possible values	Preset value
C17	Parameters Solar circuit	Running time of solar pump (A)	For monitoring of maintenance intervals	Hrs	0	9999	1	0
		Reset running times	Reset running time of solar pump to 0 hrs				Yes, No	No
		Pump activation duration controlling	Adjustment of pump output via activation duration controlling or timing device to maintain the activation temperature differential for as long as possible				On, Off	Off
C21	Total system parameters	Mode Auto_OFF	Determines the heating control outside the programmed time window				Frost protection, ECO, energy sav	Frost protection
		Frost protection delay time	Delayed start of frost protection function or ECO function	Hr	0	12	1	4
		Max. pump blocking time	If the feed target temperature is achieved for an extended period, the heating is switched off for the prescribed pump blocking time (dependent upon the outside temperature)	Min	Off, 5	60	1	15
C22	Total system parameters	Max. advanced heating time	Before the start of the first time window	Min	0	300	10	0
		Max. heating switch off time	Before the end of a time window	Min	0	120	10	0
		AT through-heating	When the outside temperature is reached, continuous heating is active	°C	OFF, -25	+10	1	Off
C24	Service	Telephone number	Entry of the telephone number for the service requirement					
		Changing the code number			0000	9999	each 1	1000
		Maintenance date	Day/Month/Year adjustable					
C25	Tools	Outside temperature correction	Matching of the external sensor	R	-5	5	1,0	0
		Room temperature correction	Matching the room temperature sensor	R	-3	3	0,5	0
		Display contrast			0	15	1	6
C26	Software versions	Software-Version VR 68 (A)	Display of version number					

Table 7.2 Display screens in the level for the expert technician (continuation)

8 VRC 430/VRC 430f Operation level for the operator

The operating level for the operator serves to indicate and to adjust/modify the basic parameters. The setting/changing of parameters can be carried out by the user without any special previous knowledge and during normal operation.
The parameters are shown in various display screens in the display area of the controller VRC 430 or VRC 430f. The operating concept is described in the operating and installation instructions of the controller VRC 430 or VRC 430f.

The installation of the VR 68 solar module in the solar heating system results in a change to the standard configuration as described in the manual for the VRC 430 or VRC 430f; the addition of **display screen 13**:

Solar gain	**13**
Solar gain	**1720 kWh**
Reset solar gain?	**no**
> Reset sola gain?	

Fig. 8.1 Display screen 13 Solar yield

The current solar yield which has accumulated (in kWh) since the last time the system was reset to the initial value of 0 kWh is displayed.
The solar yield can be reset to 0 at any time.

8.1 Optimising the solar yield

By using the solar energy from the sun which is free of charge you are taking care of the environment and reducing your energy costs. The solar energy is used to heat the solar cylinder (e.g. solar hot water cylinder). The corresponding energy savings are expressed as the solar yield in kilowatt-hours.
If the temperature differential between the solar collector and the lower section of the solar hot water cylinder is greater than a defined value, the solar pump is switched on and thermal energy is transferred to the drinking water in the cylinder. The solar yield is limited by the maximum temperature of the cylinder and the solar circuit protection function. These are designed to prevent overheating of the solar cylinder or solar circuit.
If insufficient energy is obtained from the sun, the solar hot water cylinder is reheated via the boiler. The reheating process is enabled with reference to the hot water target value and the time window for hot water. If the temperature in the upper section of the solar hot water cylinder falls to 5 °C below the hot water target value, the boiler is switched on and the drinking water in the cylinder is heated up until the desired hot water target value is reached; the boiler that provides energy for reheating is then switched off. Reheating by the boiler only takes place inside the programmed time window for hot water. A number of methods can be used to optimise the solar yield, these are described below.

8.1.1 Optimisation at the operation level for the operator

The control system for the generation of hot water is dependent on the specified hot water target value and the programmed time windows which is why these parameters are used as the basis for optimising the solar yield.
The following measures can be taken at the operation level for the operator to optimise the solar yield:
- optimise the time window for water heating,
- reduce the hot water target value.

Optimising the time window for hot water generation
Time windows can be programmed for the hot water generation. The hot water can be heated by the boiler within a specified time window if the temperature of the hot water falls by 5 °C below the target value. This post-heating function guarantees that your hot water will always be at a comforTable temperature. Solar energy is exclusively used outside this time window to heat the water free of charge (providing sufficient sunlight is available).

Note
If the sky is cloudy this may lead to reduced comfort.
The collector supplies most of the solar energy when exposed to direct sunlight. Only a small amount of solar energy can be supplied in cloudy conditions.

⇒ Optimise the time window.
You can make all necessary adjustments at the controller for your heating system in display screen 4 "Hot water timer programs". Relevant detailed information is provided in the operating manual for the controller.

Reducing the hot water target value.
If the temperature falls by 5 °C below the hot water target value within the programmed time window, the boiler is switched on to heat up the drinking water.

The boiler switches off once the hot water target temperature has been reached.

⇒ Adjust the hot water target value according to your requirements on display screen ⊟10 of the controller.

(This procedure is described in the operating manual for the controller).

⇒ The setting for the hot water target value should be as low as possible.

The lower the set target temperature is, the less frequently the boiler will need to reheat the water. More solar energy will be used.

Note
The lower the target value is the less often the boiler will need to reheat the water. The solar energy which is free of charge can be used more frequently.

8.1.2 Optimisation at the operation level for the expert technician

Note
Have the maximum temperature of the solar cylinder adjusted by the expert technician to obtain an optimum solar yield.

In order to obtain the maximum possible yield via solar heating of the cylinder but also protect against scalding and calcification, the maximum temperature of the solar cylinder can be specified. If this maximum temperature is exceeded, the solar pump is switched off.

Note
This temperature must not exceed the maximum permissible water temperature for the cylinder used!

The expert technician can adjust the maximum temperatures of the cylinders in display screens C12 and C13.

⇒ The maximum value should be as high as possible to achieve a high solar yield.

Danger!
Risk of scalding by hot water!
When the target temperature is above 60 °C, there is a risk of scalding at the hot water taps. Young children and elderly persons are particularly at risk, even at lower temperatures. Select the target temperature so that nobody is in danger.

9 Technical data

	Unit	VR 68
Operating voltage	V	230
Power consumption	VA	4
Contact load of the output relays (max.)	A	2
Maximum total current	A	4
Maximum permissible ambient temperature	°C	40
Operating voltage sensor	V	5
Minimum cross-section of the sensor cables, eBUS cables	mm^2	0.75
Minimum cross-section of power cable (rigid cable, NYM)	mm^2	1.5
Dimensions of wall mounting base		
Height	mm	174
Width	mm	272
Depth	mm	52
Level of protection		IP 20
Protection class for controller		II

Table 9.1 Technical data

10 Manufacturer's guarantee and works customer service

Vaillant warranty
We only grant a Vaillant manufacturers warranty if a suitably qualified engineer has installed the system in accordance with Vaillant instructions. The system owner will be granted a warranty in accordance with the Vaillant terms and conditions. All requests for work during the guarantee period must be made to Vaillant Service Solutions (0870 6060 777).

Vaillant Service
To ensure regular servicing, it is strongly recommended that arrangements are made for a Maintenance Agreement. Please contact Vaillant Service Solutions (0870 6060 777) for further details.

Glossary

Deactivation difference
The deactivation difference is the difference between the collector temperature and the storage temperature at which the solar pump switches off, thus stopping the transfer of solar heat to the solar cylinder. With Vaillant controllers, the deactivation difference can be adjusted within a specific range.
Caution: The deactivation difference must be at least 1K smaller than the set activation difference!

Activation duration controlling
ED controlling is the abbreviation used for activation duration controlling in solar controllers. Activation duration controlling serves to keep the solar circuit at the activation value, and thus in operation, for as long as possible. To achieve this, periodic impulses are provided by the solar pump by switching it on and off with reference to the difference between the temperature of the collector and temperature at the bottom of the cylinder. Once the activation difference is reached, the function is started (if activated) with 30 % of the activation duration, i.e. the solar pump is switched on for 18 s then switched off for 42 s. The activation duration increases as the temperature differential increases. Activation duration controlling is activated at the installer level.

Activation difference
The activation difference is the difference between the collector temperature and the storage temperature when the solar pump switches on and starts transferring solar heat to the solar storage tank.

Holiday function
If the VR 68 is operated in holiday mode, the solar yield and reheating functions are deactivated for the specified holiday period. The storage temperature is controlled automatically via the frost protection function.

Anti-legionella function
The temperatures in solar cylinders are frequently low for longer periods – this encourages the growth of germs (e.g. legionella). The legionella protection function can be activated one day a week only or every day at a specific time to prevent legionella multiplying. The legionella protection function ensures that the solar hot water cylinder is heated to a temperature higher than 60 °C for one hour. The circulation pump and legionella protection pump are activated via the anti-legionella function in order to ensure that the entire contents of the cylinder and the circulation system are heated. The function is deactivated after 2 hours at the most, even if a temperature of more than 60 °C was not achieved.

Maximum temperature of solar storage tank
In order to obtain the maximum yield from heating the cylinder with solar energy while at the same time providing the option of protection from scalding and calcification, you can set a maximum limit for the solar cylinder temperature.
For this purpose, the sensor "upper cylinder temp." SP1 is used for storage tank 1 if it is connected to the storage tank in question. Otherwise, the sensor "lower storage tank temp." SP2 is automatically used. For the second cylinder (swimming pool) SP3 is used.
If this maximum temperature specified is exceeded, the solar pump is switched off. Solar heating is only reactivated when the temperature at the active sensor falls back to 1.5 K below the maximum temperature.
The maximum temperature can be set separately for each sensor.

Tube collector function
see solar pump kick function

Solar yield
The solar yield is determined from the following:
- the difference between the collector feed and return temperatures,
- the flow rate set at the control valve of the flow rate limiter (value is set during installation),
- the running time of the solar pump.

The expert technician adjusts the flow rate limiter during the installation and enters the flow rate in the installation assistant.
The total solar yield is calculated by the solar controller and can be called up or reset at the operation level for the operator.

Solar circuit safeguard
If the solar heat supplied exceeds the current heat demand the temperature in the collector increases rapidly which results in the formation of vapour bubbles in the system (stagnation).
If the collector temperature exceeds the temperature protection value (130 °C) for more than 10 seconds (default setting), the solar pump switches off. This protects the components of the solar circuit from overheating. The solar pump switches back on automatically as soon as the collector temperature falls to 30 °C below the switch-off temperature.

Solar pump kick function (tube collector function)
The solar pump kick function is only activated if tube collectors are used.
Depending on the design, there may be a delay when recording the actual temperature of tube collectors. This can be reduced using the solar pump kick function.
When the temperature at the collector sensor rises by 2 °C, the solar pump is switched on for 15 s (solar pump kick). This transports the heated solar fluid faster to the point of measurement.

Temperature increases in the collector are therefore detected more quickly and thermal energy is transferred to the solar cylinder earlier by the solar pump if necessary.

Time window
Three time windows can be programmed each day for the heating, hot water generation and circulation pump (see operating manual for VRC430/VRC 430f Section 4.7.1).
A target value is allocated to each time window programmed for the heating.
In the case of hot water generation the hot water target temperature applies for all time windows (Screen 10 "Hot water parameters").
In the case of the circulation pump the time windows determine the operating times.
In automatic mode the system is controlled is in accordance with the specified values in the time windows.

Circulation pump
Depending on the length of the pipe, there may be a brief delay before hot water flows when the hot water cock is opened. A circulation pump circulates hot water via your hot water pipe. This means that hot water is available instantly when the water cock is opened. Time windows can be programmed for the circulation pump.

spares & parts online
IBASIS.CO.UK

spares & parts online IBASIS.CO.UK

Vaillant Ltd
Vaillant House ▪ Medway City Estate ▪ Trident Close ▪ Rochester ▪ Kent ME2 4EZ
Telephone 01634 292300 ▪ Fax 01634 290166 ▪ www.vaillant.co.uk ▪ info@vaillant.co.uk

0020054784_00 GB 112007