For the heating engineer

Installation instructions

geoTHERM

Heat pump

GB

spares & parts online IBASIS.co.uk

Vaillant

Contents

1 Notes on the documentation 4
1.1 Observing other applicable documents 4
1.2 Document storage 4
1.3 Symbols used 4
1.4 Applicability of the instructions 4
1.5 CE label 5

2 Safety instructions and regulations 6
2.1 Safety and warning information 6
2.1.1 Classification of warnings 6
2.1.2 Structure of warnings 6
2.2 Intended use 6
2.3 General safety instructions 6
2.4 Safety instructions regarding coolant 7
2.5 Regulations, rules, guidelines 8

3 Description of functions and units 9
3.1 Identification plate 9
3.2 Functional principle 10
3.3 Design of the heat pump 11
3.4 Optional accessories 13

4 Installation 14
4.1 Requirements for the installation site 14
4.2 Requirements for the well water quality (VWW only) 14
4.3 Dimensions and clearances 16
4.4 Requirements for the heating circuit 17
4.5 Check the scope of delivery 18
4.6 Removing the transport locks 19
4.7 Transporting the heat pump 20
4.8 Installing the heat pump 22

5 Hydraulics installation 23
5.1 Installing the direct heating mode 24
5.1.1 Description of functions for the direct heating mode 24
5.1.2 Installation instructions 24
5.2 Installing the mixed circuit with buffer tank 26
5.2.1 Description of functions for the heating mode with mixed circuit and buffer tank 26
5.2.2 Installation instructions 26
5.3 Installing the direct heating mode and DHW tank 28
5.3.1 Description of functions for the direct heating mode and DHW tank (domestic hot water cylinder). 28
5.3.2 Installation instructions 28
5.4 Installing the mixed circuit with buffer tank and DHW tank 30
5.4.1 Description of functions for the heating mode with buffer tank and DHW tank 30
5.4.2 Installation instructions 30
5.5 Installing the mixed circuit with buffer tank, DHW tank and external passive cooling (VWS only) 32
5.5.1 Description of functions for the heating mode with buffer tank, DHW tank and external passive cooling 32
5.5.2 Installation instructions 32
5.6 Fitting the flexible connecting hoses 34
5.7 Connect the heat pump to the heating circuit 35
5.8 Connecting the heat pump to the brine circuit (VWS only) 35
5.9 Fitting the brine expansion tank in the brine circuit (VWS only) 36
5.10 Connecting the heat pump to the well water circuit (VWW only) 37

6 Filling the heating and heat source circuit 38
6.1 Filling regulations 38
6.2 Filling and bleeding the heating circuit 39
6.3 Filling and bleeding the brine circuit (VWS only) 39
6.3.1 Preparing the filling procedure 39
6.3.2 Filling and bleeding the outer part of the brine circuit 40
6.3.3 Filling and bleeding the inner part of the brine circuit 41
6.3.4 Filling and bleeding the entire brine circuit in one operation 42
6.3.5 Building up pressure in the brine circuit 43
6.4 Filling the DHW tank, if required 43

7 Electrical installation 44
7.1 Observing the installation instructions 44
7.2 Electronic switchbox 45
7.3 Connecting the electricity supply 47
7.3.1 Unblocked mains supply (electric wiring diagram 1) 48
7.3.2 Duel-circuit supply heat pump rate (electric wiring diagram 2) 49
7.3.3 Connecting the external heating circuit pump 50
7.3.4 Connecting the external well pump (VWW only) 51
7.3.5 Connecting the external electric auxiliary heater (optional) 52
7.3.6 Connecting the limit thermostat (unblocked mains supply) 53
7.3.7 Connecting a limit thermostat (dual-circuit supply) 54
7.3.8 Connecting external brine switch (VWS only) 55
7.3.9 Connecting an external 3-way brine mixing valve cooling (VWS only, for optional external passive cooling) 56
7.4 Controller PCB (overview) 57

7.5 Installing the supplied accessory ... 58
7.5.1 Installing the VR 10 ... 58
7.5.2 Installing the VRC DCF ... 58
7.6 Installing accessories that are absolutely necessary ... 59
7.7 Installing optional accessories ... 60
7.7.1 Installing VR 90 ... 60
7.7.2 Installing VR 60 ... 61
7.8 Connecting an external boiler ... 61
7.8.1 Connecting an external boiler with eBUS interface ... 61
7.8.2 Connecting an external boiler without eBUS interface ... 62
7.9 Fitting the cladding and the operating panel ... 62
7.10 Installing vrnetDIALOG 840/2 and 860/2 ... 65

8 Start-up ... 66
8.1 Carrying out the initial commissioning ... 66
8.1.1 Selecting a hydraulic scheme ... 67
8.1.2 Selecting the electric wiring diagram ... 67
8.1.3 Implementing the settings ... 67
8.1.4 Checking and bleeding the brine circuit (VWS only) ... 67
8.1.5 Checking and bleeding the heating circuit ... 68
8.1.6 Bleeding the DHW tank, if required ... 68
8.2 Handing the heating installation over to the operator ... 68

9 Adapting the appliance to the heating system 69
9.1 Operating modes and functions ... 69
9.2 Automatic functions ... 69
9.3 Settable functions ... 71
9.3.1 Settable functions at operator level ... 71
9.3.2 Settable functions at code level ... 71
9.3.3 Additional functions via vrDIALOG ... 72
9.4 Control principle ... 72
9.4.1 Possible heater system circuits ... 72
9.4.2 Energy balance control (hydraulics diagram 1 or 3) ... 73
9.4.3 Flow target temperature control (hydraulics diagram 2, 4 or 10) ... 73
9.5 Controller structure ... 73
9.6 Resetting to factory settings ... 74
9.7 Calling up Code level menus ... 75
9.7.1 Menu C: Set parameters for the heating system ... 76
9.7.2 Menu D: Carrying out diagnoses ... 83
9.7.3 Menu I: Display general information ... 86
9.7.4 Menu A: Calling up Installation Assistent ... 88
9.8 Parameters which can only be set with vrDIALOG ... 93

10 Inspection and maintenance ... 96
10.1 Notes on inspection and maintenance ... 96
10.2 Carrying out the inspection ... 96
10.3 Carrying out the maintenance work ... 96
10.4 Carrying out a restart and trial operation ... 97

11 Fault diagnosis and rectification ... 98
11.1 Fault types ... 98
11.2 Faults in eBUS components ... 99
11.3 Faults with temporary warning ... 99
11.4 Fault with temporary switch-off ... 100
11.5 Fault with permanent switch-off ... 103
11.6 Other errors/malfunctions ... 108

12 Recycling and disposal ... 109
12.1 Disposing of the heat pump ... 109
12.2 Disposing of the packaging ... 109
12.3 Disposing of brine fluid (VWS only) ... 109
12.4 Arranging disposal of coolant ... 109

13 Customer service and guarantee ... 110
13.1 Vaillant warranty ... 110
13.2 Vaillant Service ... 110

14 Technical data ... 111
14.1 Technical Data VWS ... 111
14.2 Technical Data VWW ... 114

15 Commissioning report ... 116

16 Reference ... 118

17 Appendix ... 121

Index ... 129

1 Notes on the documentation

The following instructions are intended to guide you through the entire documentation. Other documents are valid in connection with these installation instructions.
We accept no liability for any damage caused by failure to observe these instructions.

1.1 Observing other applicable documents

➤ When installing the heat pump, you must observe all installation instructions for parts and components of the heating installation. These installation instructions are included with the individual parts of the heating installation and any supplementary components.
You must also observe all operating instructions that accompany the components of the heating installation.

1.2 Document storage

➤ Pass these installation instructions and all other applicable documents and, if necessary, any required tools to the system operator. The system operator will be responsible for storing them so that the instructions and tools are available when required.

1.3 Symbols used

The symbols used in the manual are explained below. Danger symbols for identifying dangers are also used in this manual (→ **Ch. 2.1.1**).

Symbol denoting additional useful tips and information

➤ Symbol for a required task

1.4 Applicability of the instructions

These installation instructions apply only for heat pumps that have the following article numbers:

Type name	Article number
Brine-Water Heat Pumps (VWS)	
VWS 220/2	0010002797
VWS 300/2	0010002798
VWS 380/2	0010002799
VWS 460/2	0010002800
Water-Water Heat Pumps (VWW)	
VWW 220/2	0010002801
VWW 300/2	0010002802
VWW 380/2	0010002803
VWW 460/2	0010002804

1.1 Type designations and article numbers

The 10-digit article number for the heat pump (this corresponds to the 10 digits that come after the 7th digit of the serial number) can be found on the sticker on the heat pump or on the identification plate (→ **Ch. 3.1**).

1.5 CE label

The CE label shows that the appliances according to the model overview comply with the basic requirements of the following Directives of the Council:

- Directive **2004/108/EC** of the council "Directive about the electromagnetic compatibility" with the limit class B
- Directive **2006/95/EC** of the council "Directive about electrical equipment designed for use within certain voltage limits" (Low voltage directive)

The heat pumps comply with the design described in the EC type examination certificate.

The heat pumps comply with the following standards:

- DIN EN 55014-1:2007 - 06, -2:2002 - 08
- DIN EN 61000-3-2:2007-05, -3-3:2009-06, -3-12:2005 - 09
- DIN EN 60335-1:2007, -2-40:2006 - 11, -2-34:2003 - 09, Corrigenda 1:2004:10, -2-34/ A1:2006 - 03, -2-51:2005 - 05, -3-11:2001 - 04, -4-2:2009-12, -4-3:2008-06, -4-4:2005-07, -4-5:2007-06, -4-11:2005-02
- DIN EN 60529:2000 - 09,
- DIN EN 50366:2006 - 11
- EN 50106:1997
- EN 378:2000
- EN 12735-1:2001
- EN 14276-1:2006,
- EN 12263:1998, -2:2007
- EN 12102:2008
- EN 14511:2007
- EN ISO 9614-1:1995, -2:1996, -3:2002
- ISO 5149

The CE declaration of conformity can be accessed from the manufacturer and can be provided as required.

2 Safety instructions and regulations

2.1 Safety and warning information

The appliance may only be installed by a competent person approved at the time by the Health and Safety Executive. We accept no liability for any damage caused by failure to observe these instructions.

➤ When installing the geoTHERM heat pump, observe the general safety and warning information that may appear before an action.

2.1.1 Classification of warnings

The following danger signs and signal words are used to classify the warning notes in accordance with the severity of the possible danger:

Danger sign	Signal word	Explanation
	Danger!	Immediate danger to life or risk of severe personal injury
	Danger!	Danger of death from electric shock
	Warning!	Danger of slight personal injury
	Caution!	Risk of material or environmental damage

2.1 Meaning of danger signs and signal words

2.1.2 Structure of warnings

Warning signs are identified by an upper and lower separating line and are laid out according to the following basic principle:

Signal word!
Type and source of danger!
Explanation of the type and source of danger.
➤ Measures for averting the danger

2.2 Intended use

Vaillant geoTHERM heat pumps are state-of-the-art units which are designed in accordance with recognised safety regulations. Nevertheless, there is a risk of death or serious injury to the operator or others or of damage to the units and other property in the event of improper use or use for which they are not intended.
This unit is not intended for use by persons (including children) with physical, sensory or mental impairments or who have inadequate experience and/or knowledge, unless they are supervised by a person responsible for their safety or have been given instructions by this person regarding the operation of the unit.
Children must be supervised to ensure they do not play with the unit.
Vaillant geoTHERM heat pumps are intended exclusively for domestic use.
The units are intended for use as heating units for closed wall and underfloor heating systems, for DHW loading and for optional external cooling.
The units are intended for operation on a power supply network that has a specific minimum network impedance Z_{min} at the interconnection point (household connection) (→ **Ch. 14**.)
Any other use, or use beyond that specified, shall be considered improper use. Any direct commercial or industrial use is also deemed as improper. The manufacturer/supplier is not liable for any damage resulting from improper use. The user alone bears the risk.
Intended use includes the following:
- observance of accompanying operating, installation and maintenance instructions for Vaillant products as well as for other parts and components of the system
- installing and fitting the boiler in accordance with the boiler and system approval
- compliance with all inspection and maintenance conditions listed in the instructions.

Improper use of any kind is prohibited!

2.3 General safety instructions

The heat pump must only be installed by a qualified competent person. The competent person is also responsible for complying with the existing directives, regulations and guidelines.
Observe the following safety instructions and regulations when installing the --geoTHERM heat pump:
➤ Carefully read through these installation instructions
➤ Carry out the activities that are described in these installation instructions.

Preventing explosions and burns
The brine fluid ethanol is extremely flammable, both as liquid and steam. A potentially explosive combination of steam/air may accumulate.

- Keep away from heat, sparks, naked flames and hot surfaces.
- Ensure that there is sufficient ventilation in the event of accidental release.
- Avoid the accumulation of steam/air mixtures. Keep brine fluid containers closed.
- Observe the safety data sheet that accompanies the brine fluid.

The components of the heat pump can reach high temperatures.

- Do not touch any uninsulated pipelines in any part of the heating installation.
- Do not remove any cladding parts.

Preventing electric shocks

- Always switch off all power supplies at all poles before carrying out any electrical installation or servicing work.
- Check that there is no voltage.
- Make sure that they are secured against inadvertent switching on again.

Preventing chemical burns

Brine fluids are harmful to health.

- Avoid contact with the skin and eyes.
- Do not inhale or swallow.
- Always wear gloves and protective goggles.
- Observe the safety data sheet that accompanies the brine fluid.

Preventing damage

Unsuitable frost or corrosion protection agents may damage seals and other components **of the heating circuit** and may therefore also cause leaks in the water outlet.

- Only add permitted frost or corrosion protection agents to the heating water

VWW only:

If the water is of poor quality, this may lead to damage to the suction well, the pipes and the evaporator in the water pump.

- Check that the quality level of the water that is drawn in is sufficient.

VWS only:

Frost may cause damage to seals and other components **of the brine circuit**.

- Add permitted frost protection agents that ensure frost protection up to - 15 °C to the brine fluid (**→ Ch. 6.3**).

If external passive cooling is installed:

If the pipes of the heating circuit are not sufficiently insulated and if the flow temperatures are below 20 °C, this may cause the cooling to fall below the dew point and may lead to condensation forming.

- Insulate all of the pipes in the heating circuit using vapour diffusion-tight insulation.
- Do not set the heating flow temperature too low during cooling.

During cooling, condensation forms on the radiators and their supply lines and this causes mould to form and structural damage.

- Do not install the geoTHERM heat pumps with external passive cooling in heating installations that have radiators.

Using surface collectors disrupts the cooling function.
When using a Vaillant heat pump with external passive cooling, ground sensors must be used.

Preventing environmental hazards (VWS only)

The brine fluid that is contained in the heat pump must not reach the drainage system, surface water or groundwater.

- Dispose of the brine fluid that is in the water pump in compliance with local regulations.

2.4 Safety instructions regarding coolant

Preventing freezing

The heat pump is delivered with an operational filling of R 407 C coolant. This is a chlorine-free coolant which does not affect the Earth's ozone layer. R 407 C is neither a fire hazard nor an explosion risk.
With normal use and normal conditions, the coolant R 407 C poses no risk. However, damage may occur in the event of improper use.
Escaping coolant can cause freezing if the exit point is touched:

- If coolant escapes, do not touch any components of the heat pump.
- Do not inhale any steam or gases that escape from the coolant circuit as a result of leaks.
- Avoid skin and eye contact with the coolant.
- In the event of skin or eye contact with the coolant, seek medical advice.

Preventing environmental hazards

The heat pump contains the coolant R 407 C. The coolant must not be allowed to escape into the atmosphere. R 407 C is a fluorinated greenhouse gas covered by the Kyoto Protocol, with a GWP of 1653 (GWP = Global Warming Potential).
If it escapes into the atmosphere,
its impact is 1653 times stronger than the natural greenhouse gas CO_2.

Before disposing of the heat pump, the coolant that is contained in the heat pump must only be drained via service valves into a recycling cylinder. In the case of service work, new coolant (for the quantity, see the identification plate) (**→ Ch. 3.1**) must only be poured in via service valves. If an approved replacement coolant other than the R 407 C that is recommended by Vaillant is poured in, not only do all guarantees lose their validity, but the operational safety can also not be guaranteed.

- Ensure that only officially-certified specialists with appropriate protective equipment perform maintenance work or access the coolant circuit.
- The coolant in the heat pump must only be recycled or disposed of by certified specialists in accordance with the regulations.

2.5 Regulations, rules, guidelines

As part of the installation, commissioning and operation of the heat pump and the DHW storage you must take into account the current versions of the following regulations or standards, along with any local directives or guidelines that may apply.

- Electricity at work act.
- Health and safety at work act
- Relevant Utility supplier's regulations.
- Water regulations and by-laws.
- Environment agency and local council requirements regarding bore holes, water courses, or noise levels.
- Gas safety installation and use regulations concerning any associated gas fired heat source used within the heating system.
- Building regulations part „L" and directives concerning energy saving
- Building regulations such as G3 covering Hygiene and L8 Legieonella.
- COSHH regulations
- Other relevant bodies such as HETAS and OFTEC

3 Description of functions and units

3.1 Identification plate

On the geoTHERM heat pump, an identification plate is affixed to the front of the frame You can read the type designation of the heat pump from the sticker (**1**) (→ **Fig. 3.3**) on the bottom-right of the front cladding and on the identification plate.

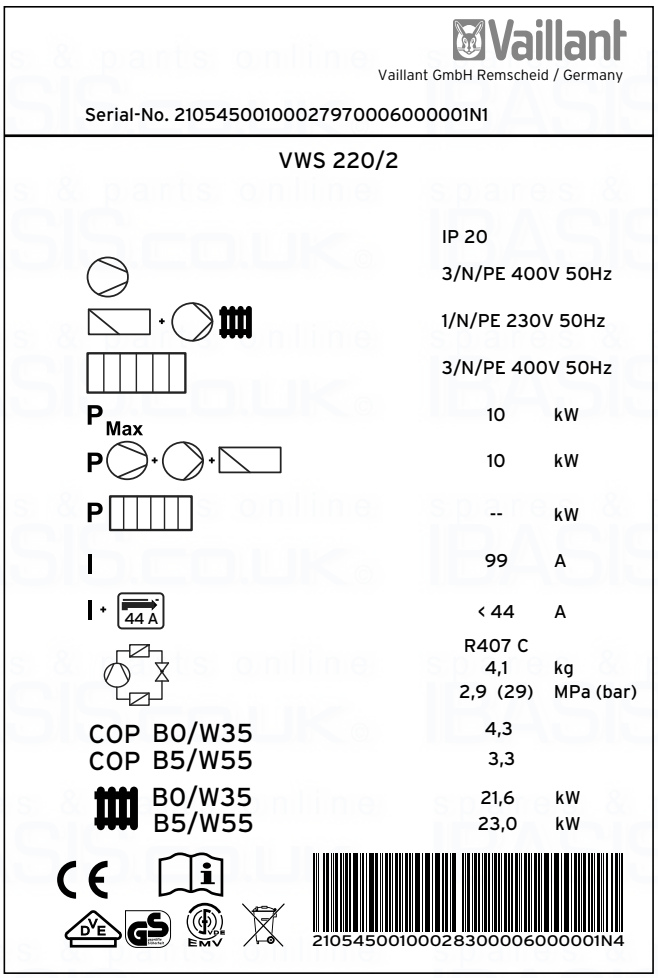

3.1 Example of an identification plate (VWS)

Explanation of the symbols on the identification plate

	Rated voltage - compressor
+	Rated voltage - pumps + controller
	Rated voltage - auxiliary heater

P_{Max}		Rated maximum power
P + +		Rated power - compressor, pumps and controller
P		Rated power - auxiliary heater
I		Start-up current without in-rush current limiter
I + 44 A		Start-up current with in-rush current limiter
		Coolant type
		Filling quantity
		Permissible rated overpressure
COP	B0/W35	Output figure (**C**oefficient **o**f **P**erformance) at a brine temperature of 0 °C and heating flow temperature of 35 °C
COP	B5/W55	Output figure (**C**oefficient **o**f **P**erformance) at a brine temperature of 5 °C and heating flow temperature of 55 °C
	B0/W35	Thermal heating output at a brine temperature of 0 °C and a heating flow temperature of 35 °C
	B5/W55	Thermal heating output at a brine temperature of 5 °C and a heating flow temperature of 55 °C
CE		CE mark
DVE GS		VDE/GS mark
		Read the operating and installation instructions.
VDE EMV		VDE mark for electromagnetic compatibility
IP 20		Type of protection against contact and moisture (IP 20)
		At the end of its useful life, dispose of it properly and according to regulations (not household waste)
21054500100028300006000001N4		Serial Number

3.1 Symbol explanations

3.2 Functional principle

The Vaillant geoTHERM heat pump VWS uses geothermal heat as its heat source, whereas the geoTHERM heat pump VWW uses well/groundwater.

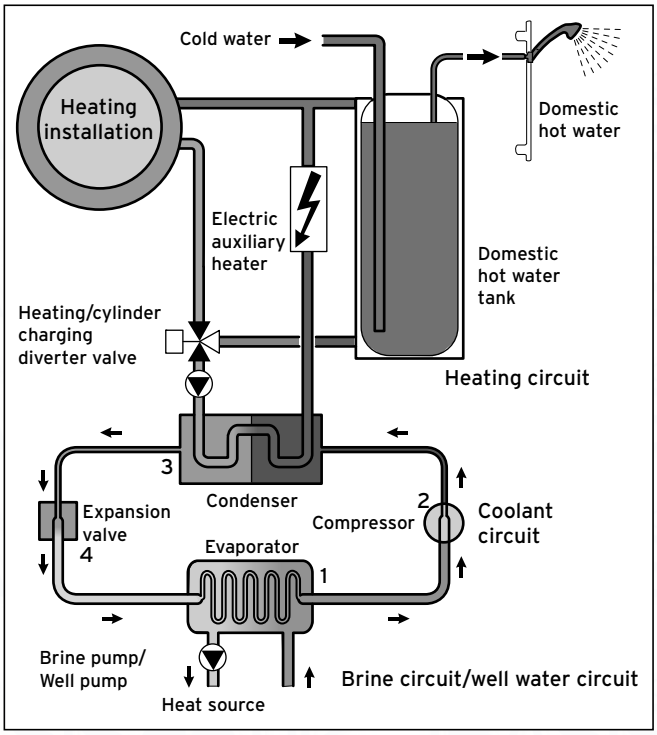

3.2 Principle of operation of the heat pump

The heat pump consists of separate circuits which are coupled with one another by means of heat exchangers. These circuits are:

- The brine circuit with which the thermal energy is transferred from the heat source to the coolant circuit.
- The coolant circuit, which releases the thermal energy to the heating circuit by means of evaporation, compression, liquefaction and expansion.
- The heating circuit, which supplies the heating and DHW loading for the domestic hot water cylinder.

The evaporator (**1**) is used to connect the coolant circuit to the geothermal heat source, from which it extracts thermal energy. At the same time, the physical state of the coolant changes; it evaporates. The condenser (**3**) is used to connect the coolant circuit to the heating installation, to which it releases the thermal energy again. In so doing, the coolant becomes liquid again; it condenses.
As thermal energy can only pass from a body at a higher temperature to a body at a lower temperature, the coolant in the evaporator must have a lower temperature than the geothermal heat source. On the other hand, the temperature of the coolant in the condenser must be higher than that of the heating water in order to be able to release the thermal energy to it.
These different temperatures are produced in the coolant circuit by means of a compressor (**2**) and an expansion valve (**4**) between the evaporator and condenser. The coolant flows in vapour form from the evaporator into the compressor, where it is compressed. This causes the pressure and temperature of the coolant vapour to rise sharply. After this process, the coolant flows through the condenser, where it releases its thermal energy to the heating water by condensation. It flows as a liquid to the expansion valve, where it expands significantly and, in so doing, loses much of its pressure and temperature. This temperature is now lower than that of the brine/well water flowing through the evaporator. The coolant can thus take up more thermal energy in the evaporator, turning into vapour in the process and flowing to the compressor. The cycle starts again.
If required, an external electric auxiliary heater can be switched on by the integrated controller.

To prevent condensation from forming inside the unit, the cables of the brine circuit/well water circuit and the coolant circuit must be cold insulated. If condensation still occurs, (**7**) → **Fig. 3.5** and → **Fig. 3.6** are collected in a condensate pan and guided under the heat pump. Drop formation under the heat pump is thus possible.

The geoTHERM heat pump VWS can be equipped with external passive cooling in order to provide for comfortable, cool room temperatures in your living rooms at high outside temperatures during the summer operation. For this purpose, additional components are required in the heat pump hydraulics. An auxiliary cooling heat exchanger, an additional mixer valve and an auxiliary diverter valve.
In the case of Vaillant heat pumps with cooling function, the principle of "passive" cooling is applied, in which thermal energy is transported via underfloor heating from the rooms to the ground without compressor operation and therefore without coolant circuit operation. The heating water, which when supplied is colder than the room temperature, absorbs thermal energy from the rooms and is pumped via the heating circuit pump into the cooling heat exchanger. The brine pump also conveys the colder brine from the ground into the heat exchanger of the brine circuit, which is operated using the counter flow principle. In the process, the warmer heating return emits thermal energy to the colder brine circuit, so that the brine which is heated to some degree is guided again to the floor. The annealed heating flow circulates again through the circuit of the underfloor heating, where the water can reabsorb thermal energy from the surroundings. The cycle starts again.

3.3 Design of the heat pump

The Vaillant geoTHERM heat pump is available in the types listed below.

Type name	Heating output (kW)
Brine-Water Heat Pumps (VWS)	B0/W35 ΔT 5K
VWS 220/2	21.6
VWS 300/2	29.9
VWS 380/2	38.3
VWS 460/2	45.9
Water-Water Heat Pumps (VWW)	W10/W35 ΔT 5K
VWW 220/2	29.9
VWW 300/2	41.6
VWW 380/2	52.6
VWW 460/2	63.6

3.2 Type overview

The heat pump can be operated at any normal electrical supply tariff.

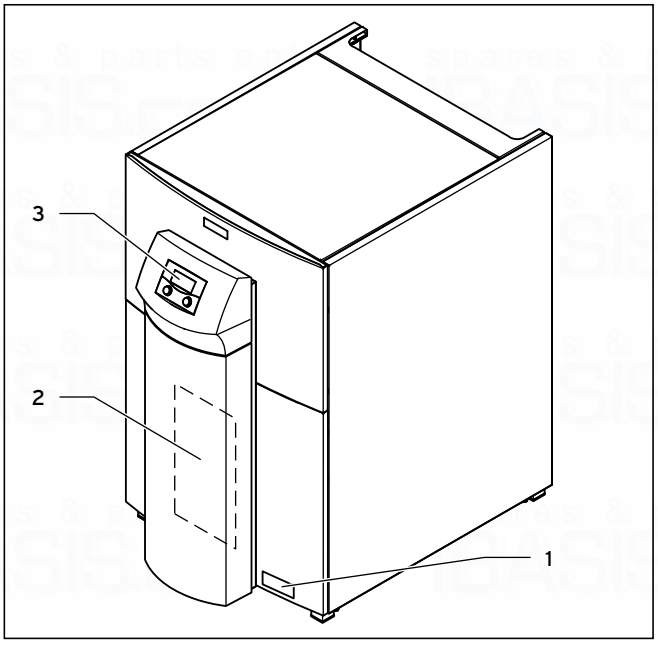

3.3 Front view

Key
1 Sticker with the heat pump type designation
2 vrnetDIALOG mounting plate (behind the cover column)
3 Operating panel

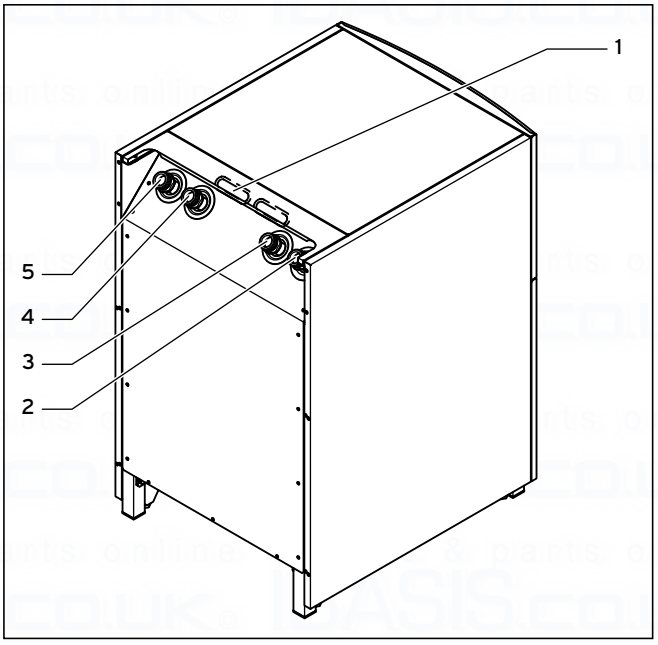

3.4 Rear view

Key
1 Cable feedthrough for electrical connections
2 From the heat pump to the heat source (cold brine/well water)
3 From the heat source to the heat pump (warm brine/well water)
4 Heating return
5 Heating flow

spares & parts online IBASIS.co.uk

Assemblies

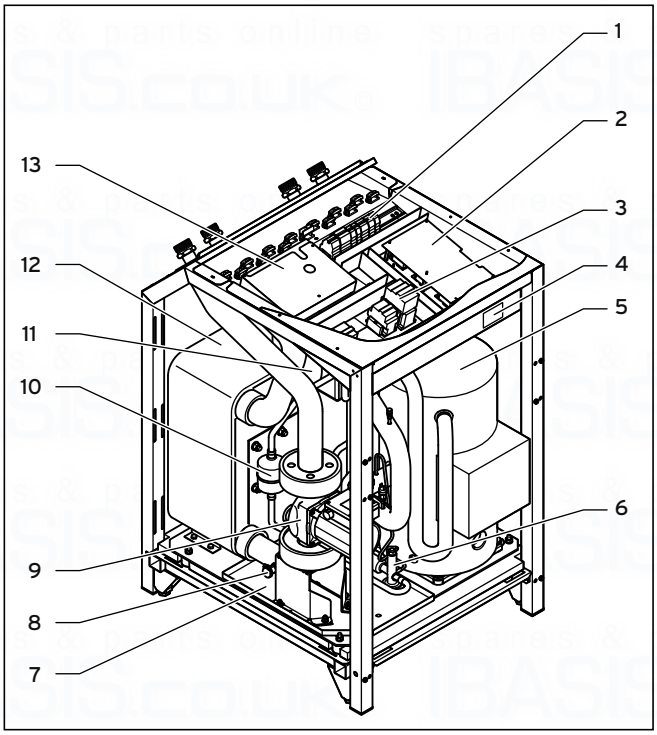

3.5 Front view when open (VWS)

Key
1 Electrical connections:
2 In-rush current limiter
3 Circuit breakers
4 Identification plate
5 Compressor
6 Expansion valve
7 Condensate pan
8 Brine circuit filling and emptying valve
9 Brine pump
10 Filter drying cartridge
11 Condenser
12 Evaporator
13 Controller PCB (under cover plate)

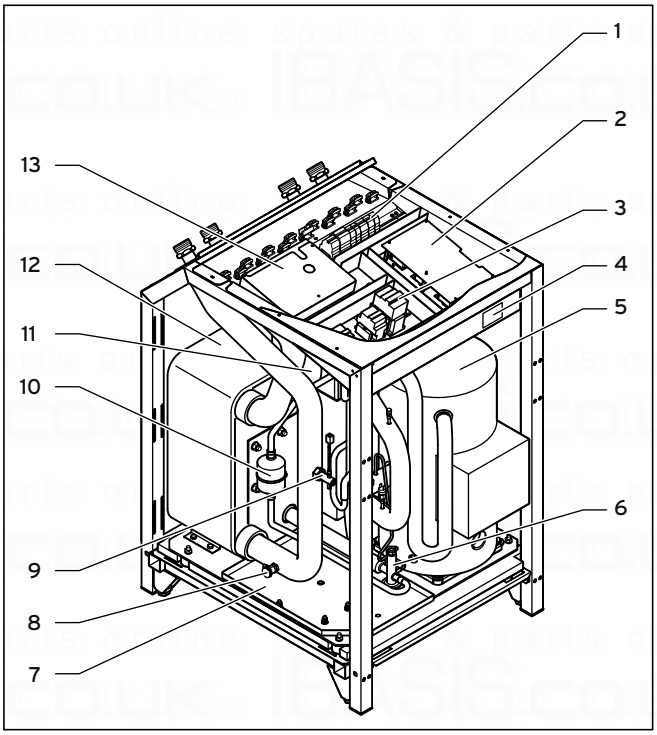

3.6 Front view when open (VWW)

Key
1 Electrical connections:
2 In-rush current limiter
3 Circuit breakers
4 Identification plate
5 Compressor
6 Expansion valve
7 Condensate pan
8 Brine circuit filling and emptying valve
9 Flow switch
10 Filter drying cartridge
11 Condenser
12 Evaporator
13 Controller PCB (under cover plate)

Some components, such as heating circuit pump, 3-way valves or electrical auxiliary heater, are integrated into the VWS and VWW geoTHERM heat pumps, but these must be placed on-site and installed externally.

3.4 Optional accessories

You can use the following Vaillant units to enhance the heat pump system. Further information about installing Vaillant units is available in → **Ch. 7.7**.

VR 60 mixer module
With the mixer module, you can expand the control system of the heating installation by two mixed circuits. You can connect a maximum of six mixer modules.

VR 90 Remote control unit
You can connect a separate remote control unit for the first six heating circuits (CH 4 – CH 15).

VR 10 standard sensor
Depending on the system configuration, additional sensors may be required, for example, as supply, return, collector or tank sensors.

vrDIALOG 810/2
vrDIALOG is a communications unit with software and a connecting cable that provide the option to diagnose, monitor and set parameters for the heat pump on-site from a computer.

vrnetDIALOG 840/2, 860/2
The vrnetDIALOG communications unit provides the option to carry out remote diagnosis, monitoring and to set parameters from one computer via a telephone connection or an integrated GSM modem, irrespective of your current location.

VPS heating water buffer tank
The VPS buffer tank is used as an intermediate cylinder for heating water and can be installed between the heat pump and the heating circuit. It provides the energy that is required to bridge any idle periods from the power company.

VIH and VDH domestic hot water cylinder
The Vaillant VIH coiled tube tank and the Vaillant VDH double wall tank are specially designed to be combined with heat pumps and are used for heating and storing hot water.

VPS /2 buffer tank
The VPS /2 buffer tank (available as an option with VPM-W fresh water unit or VPM-S solar charging unit) is used as temporary storage for heating water and can be fitted between the heat pump and the heating circuit. It provides the thermal energy that is required to bridge any idle periods from the power company.

Other accessories that are available from Vaillant
- Brine concentrate
- Filling pump for brine circuit
- Heat pumps for brine filling unit

Other accessories
- Safety group and drain pipe for heating circuit
- Expansion vessel for heating circuit
- Expansion vessel for hot water circuit
- Expansion vessel for brine circuit

4 Installation

4.1 Requirements for the installation site

- Choose a dry room that is frost-proof and where the temperature does not fall below 7 °C and does not exceed a maximum of 25 °C.
- Note that the installation room must have a minimum volume. In accordance with DIN EN 378 T1, the minimum size of the installation room (V_{min}) for heat pumps is calculated as follows:
  $V_{min} = G/c$
  G = coolant filling quantity in kg
  c = practical limit value in kg/m³
  (for R 407 C, c = 0.31 kg/m³)
  This therefore results in the following minimum installation space:

Heat pump type	Coolant filling quantity [kg]	Minimum installation space [m³]
VWS 220/2 VWW 220/2	4.1 4.3	13.2 13.9
VWS 300/2 VWW 300/2	5.99	19.3
VWS 380/2 VWW 380/2	6.7	21.6
VWS 460/2 VWW 460/2	8.6	27.7

4.1 Minimum size of the installation space for the heat pump

- Ensure that the required minimum clearance can be maintained.
- When selecting the installation site, you must take into consideration that when the heat pump is in operation, it will carry vibrations over to the floor and the nearby walls.
- Ensure that the floor is level and offers sufficient bearing capacity to be able to bear the weight of the heat pump, including a hot water tank and, if required, a filled buffer tank that is ready for use.
- Ensure that cables can be easily run (for brine, well water, hot water and heating).

Caution!
If an unsuitable heating type is used during cooling, there is a risk of damage posed by a build-up of condensation.
During cooling, condensation forms on the radiators and their supply lines and this causes mould to form and structural damage.
- Do not install the geoTHERM heat pumps with external passive cooling in heating installations that have radiators.

Take the cooling into consideration when using surface collectors.
When using a Vaillant heat pump with external passive cooling, a ground sensor must be used.

4.2 Requirements for the well water quality (VWW only)

Caution!
Risk of damage from unsuitable well water.
Deposits caused by using unsuitable well water may damage the suction well, the pipes and the evaporator. Using water that contains salt is not permitted.
- Before installing the unit, check that the quality level of the water that is drawn in is sufficient.

If the heat pump must be installed directly in the well water circuit, irrespective of the legal requirements, a water analysis must be carried out in accordance with the following table for evaluating the quality of the well water (→ **Tab. 4.2**) and you must decide whether the well water can be used as a heat source. The table is to be used as a guide and does not claim to be complete. If the well water is not of a sufficient quality, you must use a brine-water heat pump (VWS) that has an intermediate heat exchanger that must be installed on-site (→ **geoTHERM planning information**).

As limit values, the values for "copper" prevail because the heat pump contains a copper-soldered stainless steel plate-type heat exchanger. If the property "↓" (unsuitable) appears in the "Copper" column or if the property "◊" appears three times, direct operation is not permitted. In this case, an intermediate circuit (with brine-water heat pump and intermediate heat exchanger) must be installed.

If a screwed stainless steel heat exchanger (material 1.4401) is used as an intermediate circuit, the limit values for "Stainless Steel" in the table apply. If the property "↓"

(unsuitable) appears in the "Stainless Steel" column or if the property "◊" appears three times, operation with an intermediate circuit is not permitted.
When water from lakes and ponds is used, an intermediate circuit must always be installed. The intermediate circuit must be filled with brine fluid (30 % mixture).

Water components	Concentration in mg/l	Copper	Stainless steel (1.4401)
Iron, dissolved Fe **	< 0.2 > 0.2	♦ ↓**	♦ ♦
Manganese, dissolved Mn **	< 0.1 > 0.1	♦ ↓**	♦ ♦
Aluminium, dissolved Al	< 0.2 > 0.2	♦ ◊	♦ ♦
Hydrogen sulphide H_2S	< 0.05 > 0.05	♦ ↓	♦ ♦
Sulphide SO_3	< 1	♦	♦
Chlorine gas, free Cl_2	< 0.5 0.5 - 5 > 5	♦ ◊/↓ ↓	♦ ♦ ◊/↓
Ammonia NH_3	< 2 2 - 20 > 20	♦ ◊ ↓	♦ ♦ ♦
Carbonic acid, free aggressive CO_2	< 5 5 - 20 > 20	♦ ◊ ↓	♦ ♦ ♦
Oxygen O_2	< 2 > 2	♦ ◊	♦ ♦
Sulphate $[SO_4]^{2-}$	< 70 70 - 300 > 300	♦ ◊/↓ ↓	♦ ♦ ↓
Hydrogen carbonate HCO_3^-	< 70 70 - 300 > 300	◊ ♦ ◊	♦ ♦ ♦
Ratio $HCO_3^-/[SO_4]^{2-}$	<1.0 >1.0	◊/↓ ♦	♦ ♦
Chloride Cl^-	< 300 > 300	♦ ◊	♦ ◊
Nitrate, dissolved NO_3	< 100 > 100	♦ ◊	♦ ♦
Optical characteristics ***	**Limit value**	**Clear, colourless**	**Clear, colourless**
Water overall hardness	4.0 - 8.5 °dH	♦	♦
pH value	< 6.0 6.0 - 7.5 7.5 - 9.0 > 9.0	◊ ◊ ♦ ◊	◊ ◊/♦ ♦ ♦
Electrical conductivity (at 20 °C)	<10 µS/cm 10 - 500 µS/cm >500 µS/cm	◊ ♦ ↓	♦ ♦ ♦

4.2 Well water quality limit values

♦ = Resistance normally good
◊ = Danger of corrosion; if several criteria are rated with ◊: critical
↓ =unsuitable

**) To prevent the sedimentation of iron ochre, especially in the absorbing well, a limit value of < 0.2 mg/litre for iron (Fe) and < 0.1 mg/litre for manganese (Mn) must be observed.

***) Cloudiness or settleable substances must not be present in the groundwater, irrespective of the statutory regulations. Extremely fine dirt particles that lead to clouding of the water also cannot be eliminated by filters. They may therefore accumulate in the evaporator and adversely affect the heat transfer performance.

4.3 Dimensions and clearances

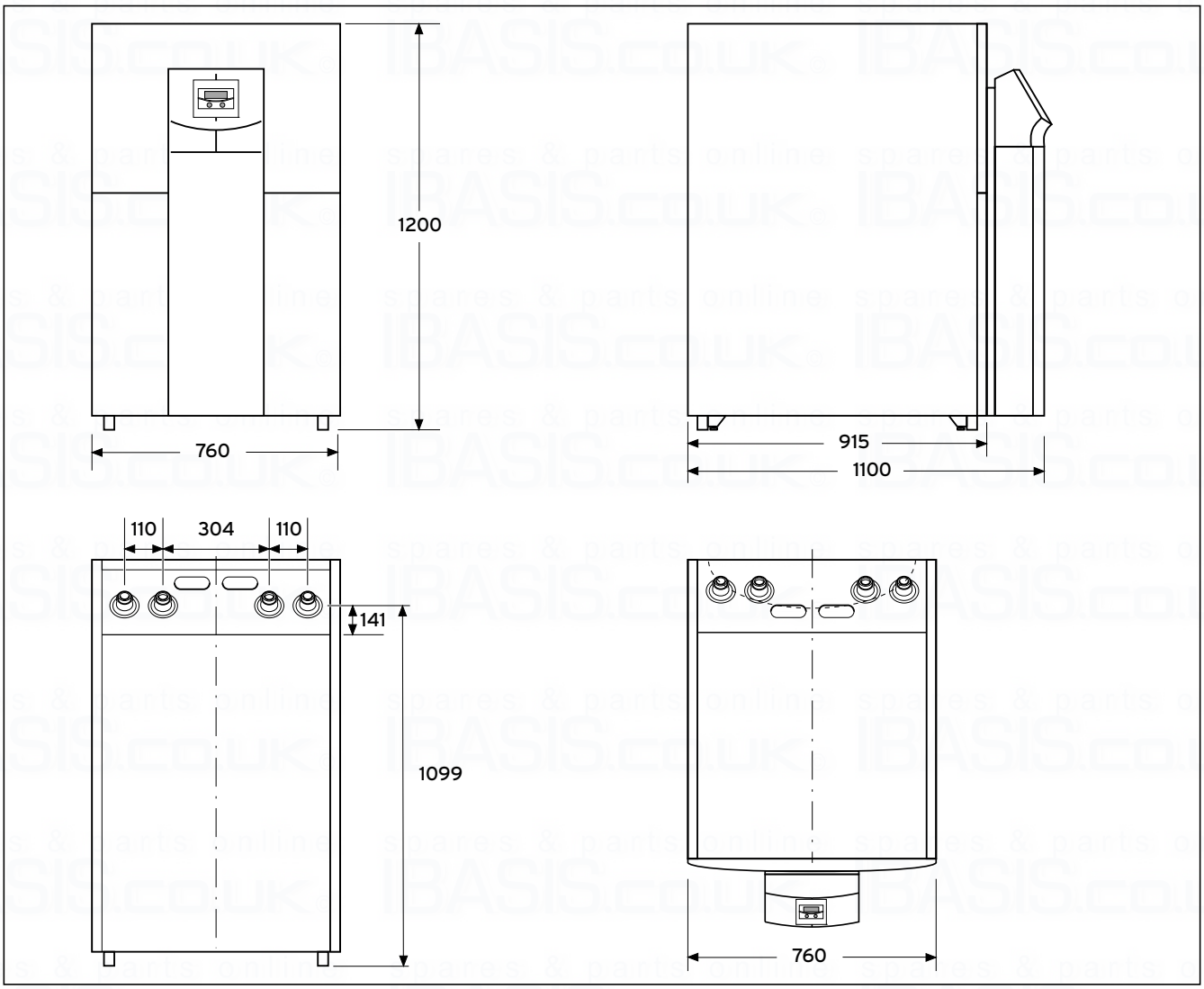

4.1 Dimensions and clearances

1) Adjustable feet adjustable in height by 10 mm

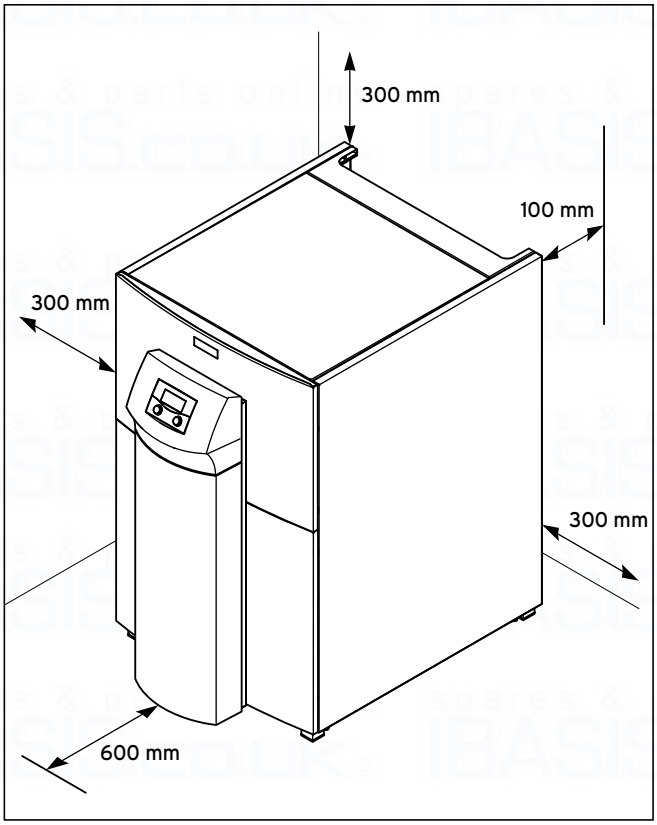

4.2 Minimum clearances for installing the heat pump

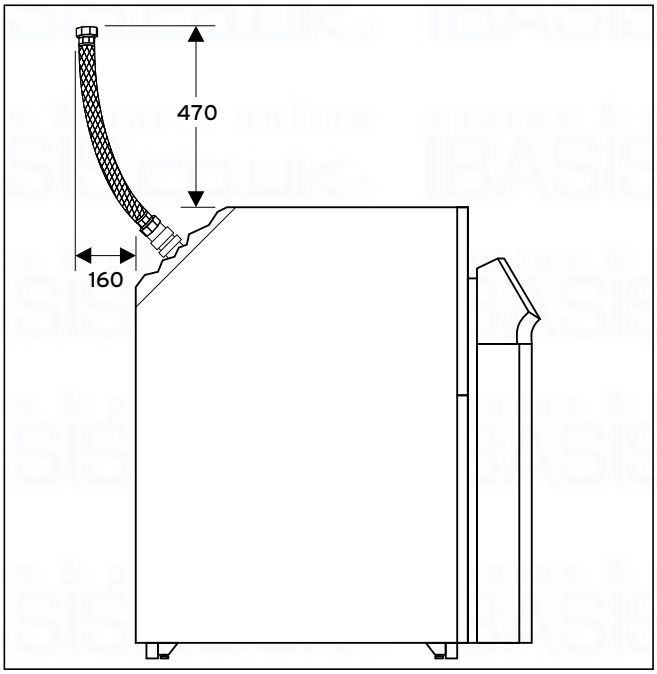

4.3 Arrangement of the flexible hoses

➤ Plan the exact installation site of the geoTHERM heat pump and the pipe installation in such a way that the supplied flexible connecting hoses can be connected to the vibration isolation.

4.4 Requirements for the heating circuit

Only for installed external passive cooling:

Caution!
In the heating mode, there is a risk of damage caused by the temperature falling below the dew point and by a build-up of condensation.
All pipes in the heating circuit must be provided with vapour diffusion-tight insulation. Radiator heating is not suitable for the cooling with a Vaillant geoTHERM heat pump.

➤ Insulate all of the pipes in the heating circuit using vapour diffusion-tight insulation.

Caution!
In the cooling mode, there is a risk of damage caused by the temperature falling below the dew point and by a build-up of condensation.
Adequate cooling function is also guaranteed in a flow temperature of 20 °C.

➤ Do not set the heating flow temperature too low during cooling.

The heat pump is only suitable for connection to a closed central heating installation. To ensure that the unit operates smoothly, the central heating installation must be set up by authorised specialists in compliance with the applicable regulations.
A heat pump is suited to low temperature heating systems. For this reason, the heating installation must be designed to reach low flow temperatures (ideally approx. 30 - 35 °C). In addition, you must ensure that idle times from the power company are taken into consideration.

To prevent energy losses and to protect against freezing, all supply lines must have thermal insulation.
The pipelines must be free from contamination.

➤ If required, clean the pipelines thoroughly before filling them.

Caution!
There is a risk of damage due to unsuitable frost and corrosion protection agents.
Unsuitable frost or corrosion protection agents may damage seals and other components and may therefore also cause leaks in the water outlet.
➤ Only add permitted frost or corrosion protection agents to the heating water

For heating installations that are overwhelmingly fitted with thermostatically or electrically controlled valves, you must ensure that the flow through the heat pump is continuous and sufficient. Irrespective of the choice of heating installation, the rated volume flow of heating water (→ **Tab. 14.1** or → **Tab. 14.2**) must be guaranteed.

4.5 Check the scope of delivery

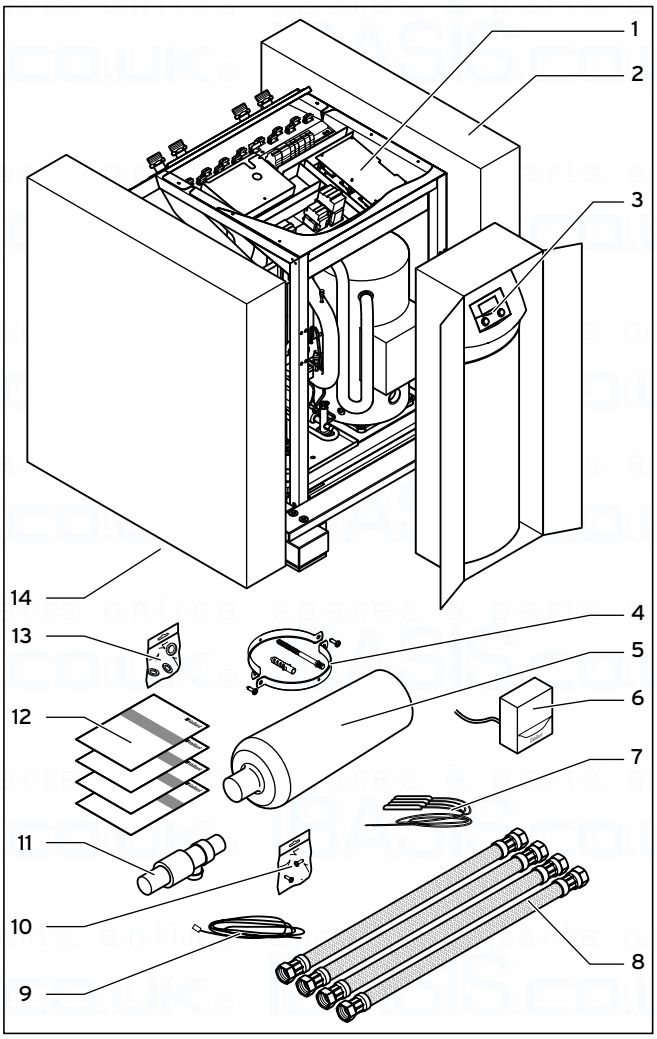

4.4 Check the scope of delivery.

For the key, see tab. 4.3

The heat pump is delivered on a pallet and consists of three packing units.
➤ Check the heat pump and the operating panel that is packed separately for any damage caused in transit.

Item.	Number	Description
1	1	Heat pump
12	2	Installation instructions, operating instructions
2	2	Left and right side parts
Together in one box:		
3	1	Operating panel, cover column
5	1	6-litre brine expansion tank, max. 300 kPa (3 bar)
Together in one large bag:		
4	1	Clamp for fastening the brine expansion tank
11	1	Expansion relief valve for brine circuit, 1/2", 300 kPa (3 bar)
6	1	VRC DCF radio clock signal receiver with external sensor
7	4	VR 10 sensors
9	1	Control cable for vrnetDIALOG
10	1	Bag of small parts for fastening the brine expansion tank
	2	M6 flat-head screws for fitting the operating panel on the mounting plate
	2	Tapping screws for the operating panel mounting plate
	4	Flat-head screws for fixing the side parts to the frame
Together in one box:		
8	4	Flexible connecting hoses (600 mm long, heat source-side each with 1 1/2" inside thread)
13	8	Bag with seals for connecting hoses for the heating circuit (grey) and the brine/ well water circuit (yellow/green)
14	4	Lower and upper front cladding, front and rear cover

4.3 Scope of delivery

4.6 Removing the transport locks

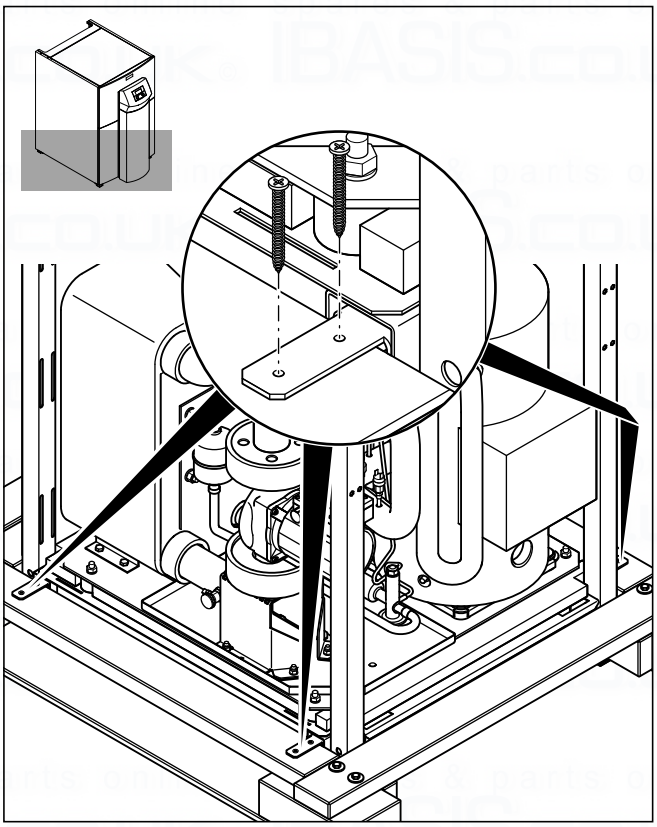

4.5 Removing the transport locks

- Carefully remove the packaging and padding without damaging the parts of the unit.
- Remove the transport locks with which the heat pump is fixed to the pallet.
- Dispose of the transport locks correctly. These are no longer required.

4.7 Transporting the heat pump

Danger!
Risk of injury from lifting a heavy weight.
The heat pump weighs up to 420 kg.
➤ Only use one of the following specified modes of transport.

Caution!
Risk of damage due to improper transportation.
Regardless of the mode of transport, the heat pump must never be tilted by more than 45°. Otherwise, this may lead to malfunctions in the coolant circuit during subsequent operation. In the worst case scenario, this may lead to a fault in the whole heating installation.
➤ During transport, tilt the heat pump to a maximum angle of 45°.

Caution!
Risk of damage due to unsuitable transportation.
Ensure that the mode of transport that you select is designed to match the weight of the heat pump.
➤ You can find out the weight of the heat pump from the technical data (→ **Tab. 14.1** or → **Tab. 14.2**).

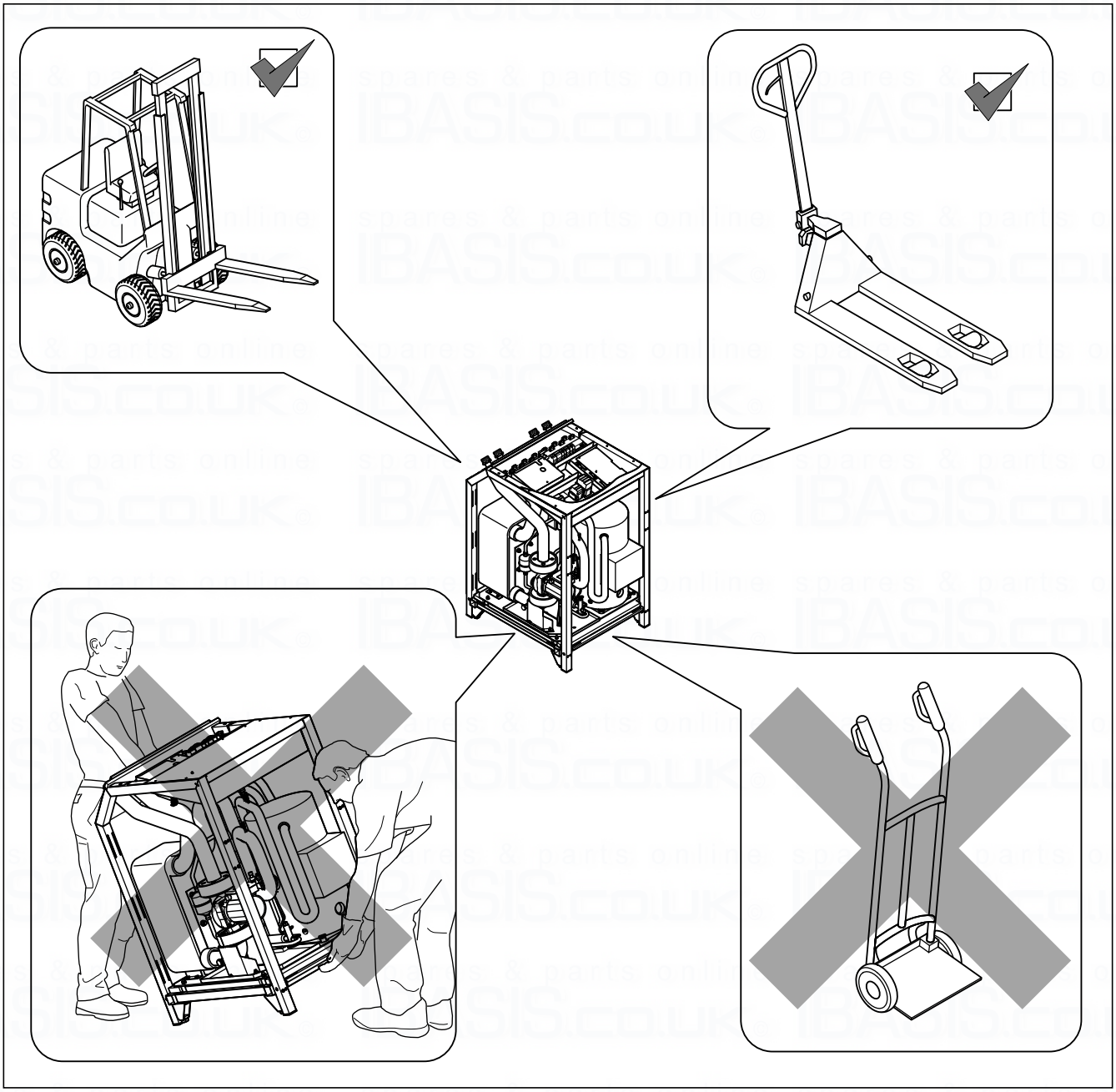

4.6 Permitted modes of transport

4.8 Installing the heat pump

➤ When installing the heat pump, ensure that the minimum wall clearances (➞ **Fig. 4.2** and ➞ **Fig. 4.3**) are kept.

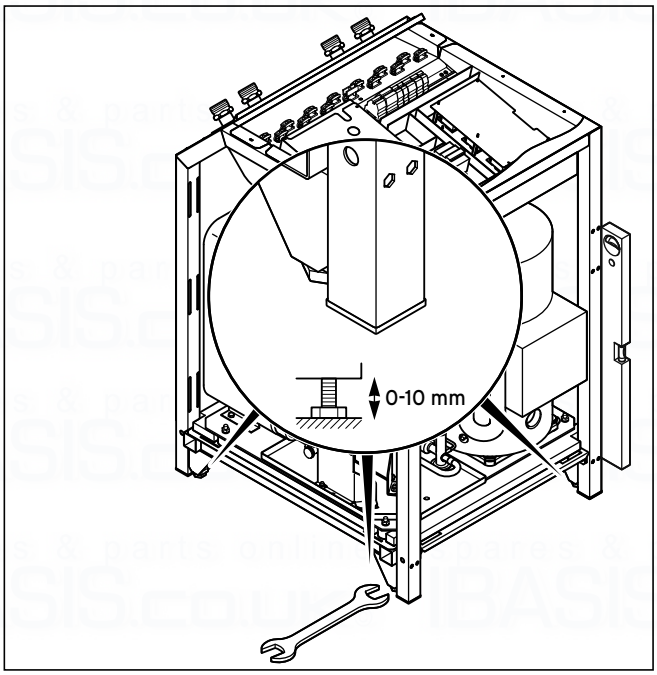

4.7 Adjust the adjustable feet

➤ Adjust the adjustable feet to ensure that the heat pump is horizontal.

Only fit the cladding panels after you have completed all of the installation work (➞ **Ch. 7.9**).

5 Hydraulics installation

Caution!
Risk of damage caused by residue in the heating flow and return.
Residue from the pipelines, such as welding beads, scale, hemp, putty, rust and coarse dirt, may be deposited in the heat pump and cause malfunctions.
- ➤ Flush the heating system thoroughly before connecting the heat pump in order to remove any possible residue.

Caution!
Risk of damage caused by leaks.
Mechanical stress on the supply lines may cause leaks and, as a result, will cause damage to the heat pump.
- ➤ Avoid mechanical stress on supply lines.
- ➤ Observe the minimum radius of r = 300 mm for the supplied flexible connecting hoses.

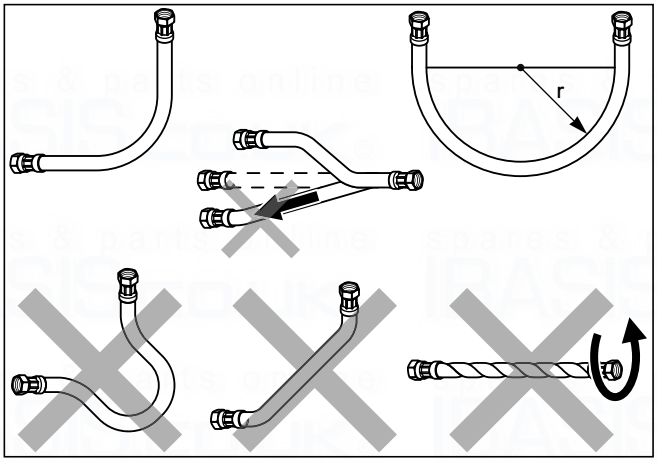

5.1 Handling flexible connecting hoses

The installation must only be carried out by a qualified heating engineer.

- ➤ When installing the pipes, pay attention to the measurement and connecting drawings (→ **Fig. 4.1** and → **Fig. 4.2**).
- ➤ During the installation, observe the applicable regulations.
- ➤ Observe the following note about avoiding sound transmission:
  To reduce the level of noise to a minimum, thread the pipes through ceilings and walls with insulation against structure-borne sound.

Position the pipe brackets to secure the heating circuit and brine/well water piping so that it is not too close to the heat pump in order to prevent the connection from being too rigid.
In each case, install the supplied flexible connecting pipes to the vibration isolation on the heat pump.

We do not recommend that you use stainless steel corrugated pipes because the corrugated shape of the hoses would result in too great a loss of pressure in the heating water.

Caution!
The unit may not work properly if there is air in the heating installation.
Air in the heating system leads to impaired operation and reduces the heating output.
- ➤ Install bleeding valves at suitable locations in the heating installation.

5.1 Installing the direct heating mode

5.1.1 Description of functions for the direct heating mode

The underfloor heating circuits are connected directly to the heat pump. By default, this is controlled by an energy balance controller (→ **Ch. 9.4.2**).

5.1.2 Installation instructions

- Install the hydraulic components in accordance with the local requirements and as shown in the sample hydraulic scheme below.
- If you do not use the optional accessory heat pump brine filling unit for heat pumps (**56**) (→ **Fig. 5.2**) install the individual hydraulic components accordingly (→ **Fig. 5.9**).
- Connect a limit thermostat to ensure the underfloor heating function on the heat pump.
- Connect the VF2 flow temperature sensor to ensure the integral energy function.
- When starting up the unit, set Hydraulic Scheme No 1 in the controller.
- Ensure that there is a minimum amount of circulating water (approx. 30 % of the standard rated volume flow).

If you have installed a hydraulic switch between the heat pump and the heating installation, VF2 the temperature sensor in the supply of the hydraulic switch must be attached to the heating installation.

Caution: Schematic only!
These examples of hydraulic schemes do not contain all of the shut-off and safety instruments that are required for correct installation.

- Observe the applicable standards and regulations.

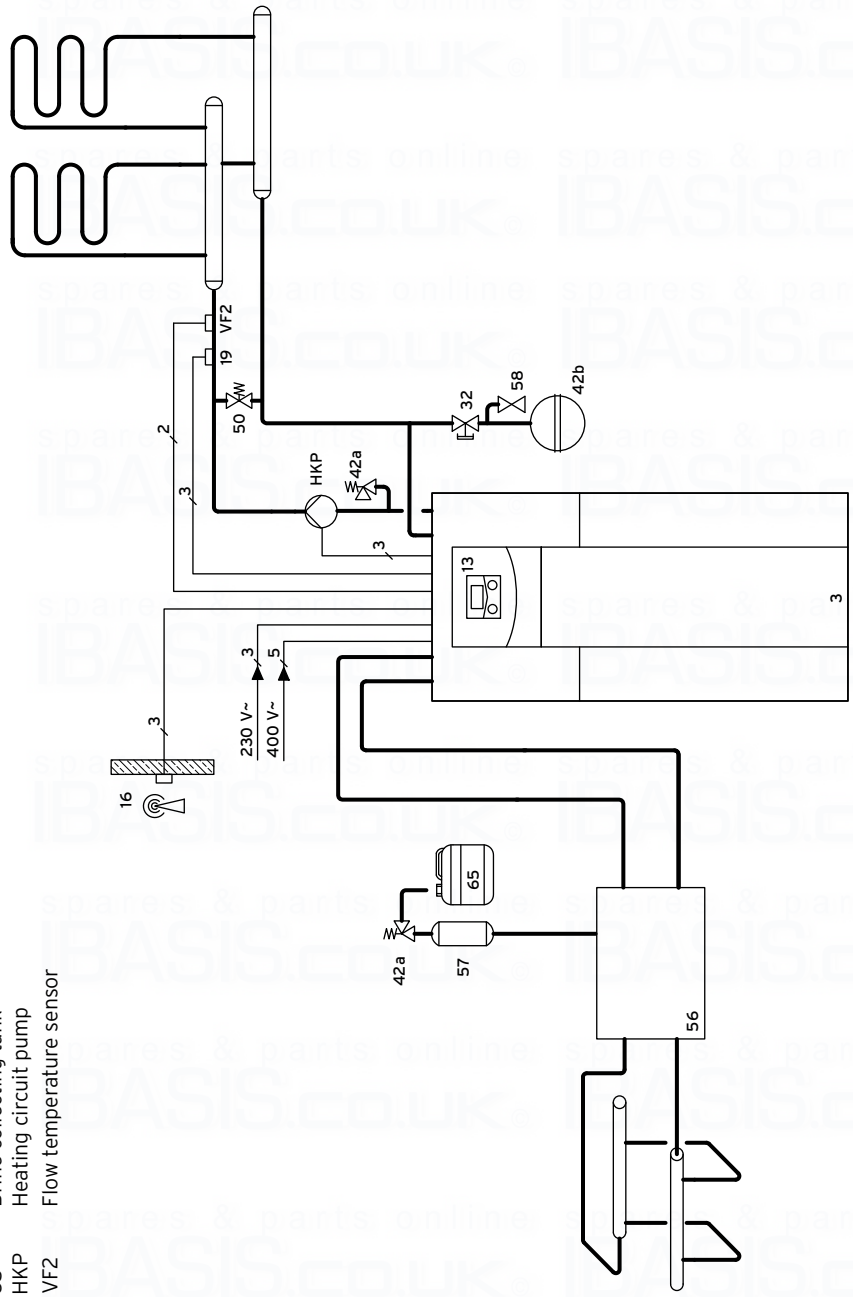

Key

3	geoTHERM heat pump VWS ..0/2
13	Weather-controlled energy balance controller
16	VRC-DCF receiver with outside temperature sensor
19	Maximum thermostat
32	Capped stop valve
42a	Expansion relief valve
42b	Heating circuit diaphragm expansion tank
50	By-pass valve
56	Heat pumps for brine filling unit
57	Brine expansion tank
58	Filling and drainage tap
65	Brine collecting tank
HKP	Heating circuit pump
VF2	Flow temperature sensor

5.2 Sample hydraulic scheme: Direct heating mode

5.2 Installing the mixed circuit with buffer tank

5.2.1 Description of functions for the heating mode with mixed circuit and buffer tank

The heating circuits are connected as a separating tank to the heat pump via a buffer tank and are operated using an external heating circuit pump via a heating circuit mixer.
By default, this is controlled by a flow temperature setpoint control (→ **Ch. 9.4.3**) .
The VF2 flow temperature sensor sits behind the external heating circuit pump (underfloor protective circuit).
The heat pump responds to a demand for heat from the buffer tank.

5.2.2 Installation instructions

- Install the hydraulic components in accordance with the local requirements and as shown in the sample hydraulic scheme below.
- If you do not use the optional accessory heat pump brine filling unit for heat pumps (**56**) (→ **Fig. 5.3**) install the individual hydraulic components accordingly (→ **Fig. 5.9**).
- Connect a limit thermostat to ensure the underfloor heating function on the heat pump.
- Connect the VF2 flow temperature sensor to ensure the integral energy function.
- When starting up the unit, set Hydraulic Scheme No 2 in the controller.

The following only applies when installing the optional external passive cooling:

Caution!
Risk of malfunction in cooling mode.
The buffer tank must not be in operation during the cooling mode of the heat pump.
- Install a motor-driven 3-way diverter valve in both the flow and return so that the buffer tank is avoided in cooling mode.

Caution: Schematic only!
These examples of hydraulic schemes do not contain all of the shut-off and safety instruments that are required for correct installation.

- Observe the applicable standards and regulations.

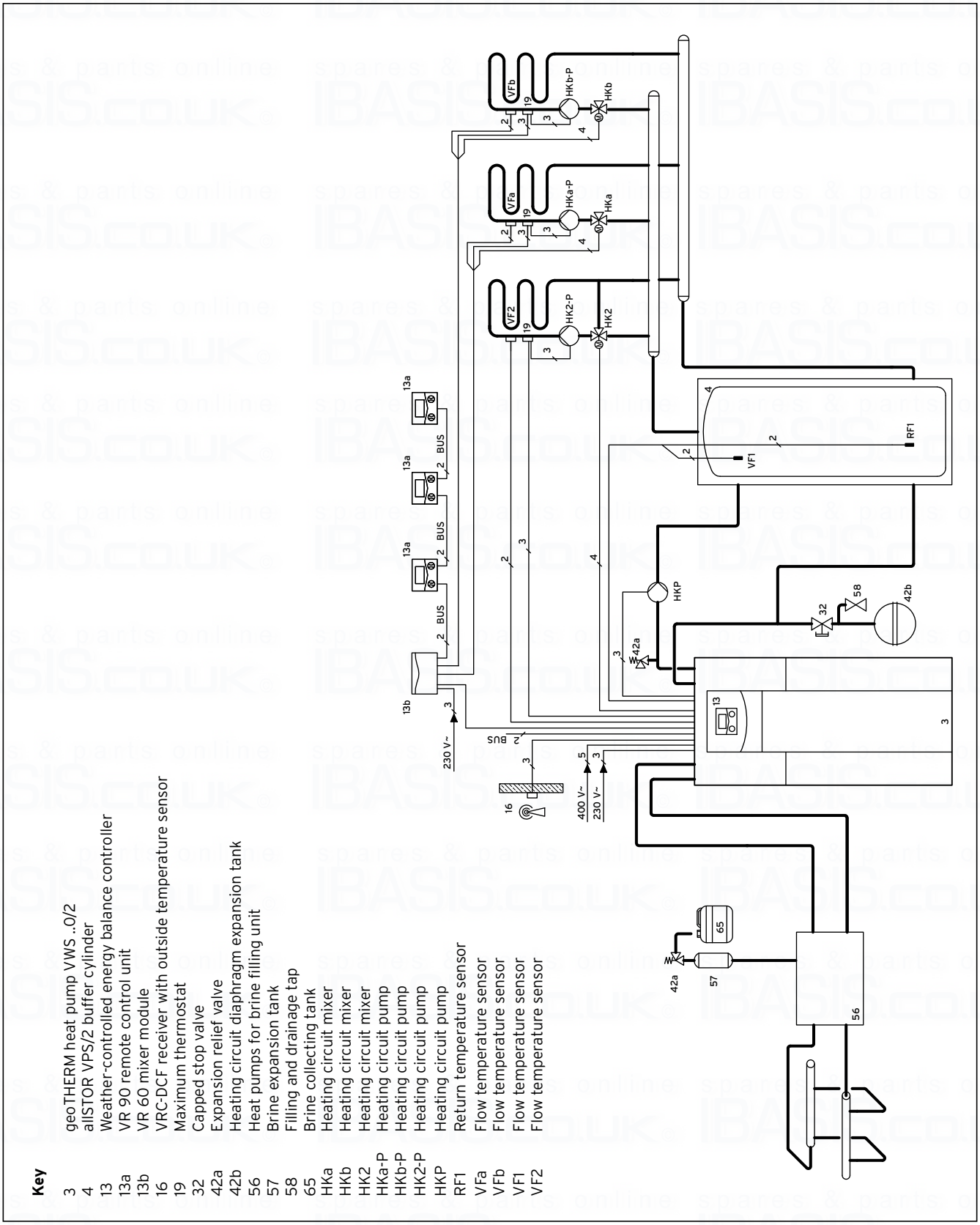

5.3 Sample hydraulic scheme: Mixed circuit with buffer tank

5.3 Installing the direct heating mode and DHW tank

5.3.1 Description of functions for the direct heating mode and DHW tank (domestic hot water cylinder).

The underfloor heating circuits are connected directly to the heat pump. By default, this is controlled by an energy balance controller (→ **Ch. 9.4.2**).
The heat pump also operates a DHW tank.

5.3.2 Installation instructions

- Install the hydraulic components in accordance with the local requirements and as shown in the sample hydraulic scheme below.
- If you do not use the optional accessory heat pump brine filling unit for heat pumps (**56**) (→ **Fig. 5.4**) install the individual hydraulic components accordingly (→ **Fig. 5.9**).
- Connect a limit thermostat to ensure the underfloor heating function on the heat pump.
- Connect the VF2 flow temperature sensor to ensure the integral energy function.
- When starting up the unit, set Hydraulic Scheme No 3 in the controller.
- Ensure that there is a minimum amount of circulating water (approx. 30 % of the standard rated volume flow).

If you have installed a hydraulic switch between the heat pump and the heating installation, VF2 the temperature sensor in the supply of the hydraulic switch must be attached to the heating installation.

You can choose to use the VPS/2 multi storage tank as a DHW tank.
- When connecting the hydraulics, observe the
  → **installation instructions** for the cylinder and the
  → **geoTHERM planning information**.

The 1" diverter valve supplied in the VPS/2 multi storage tank must be replaced by two 3-way diverter valves that must be installed on-site . The diverter valves must be connected to the LP/UV1 terminal on the controller PCB (**2**) (→ **Fig. 7.18**).

As of VWS/VWW 380/2, the VPS/2 1500 multi storage tank must be used.

Caution: Schematic only!
These examples of hydraulic schemes do not contain all of the shut-off and safety instruments that are required for correct installation.
- Observe the applicable standards and regulations.

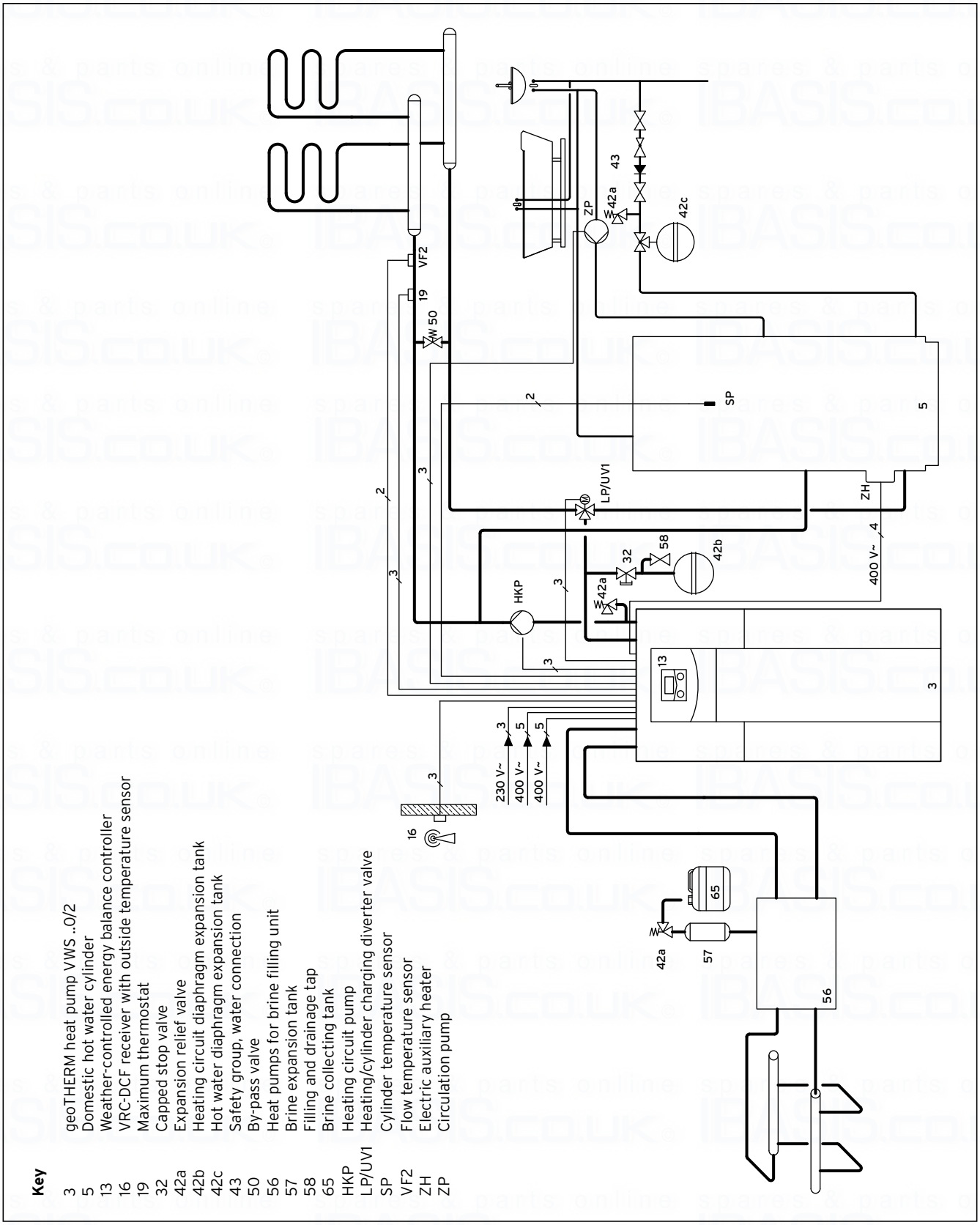

5.4 Sample hydraulic scheme: The direct heating mode and DHW tank

5.4 Installing the mixed circuit with buffer tank and DHW tank

5.4.1 Description of functions for the heating mode with buffer tank and DHW tank

The heating circuits are connected as a separating tank to the heat pump via a buffer tank and are operated using an external heating circuit pump via a heating circuit mixer.
By default, this is controlled by a flow temperature setpoint control (→ **Ch. 9.4.3**).
The VF2 flow temperature sensor sits behind the external heating circuit pump (underfloor protective circuit).
The heat pump responds to a demand for heat from the buffer tank.
The heat pump also operates a DHW tank.

5.4.2 Installation instructions

- Install the hydraulic components in accordance with the local requirements and as shown in the sample hydraulic scheme below.
- If you do not use the optional accessory heat pump brine filling unit for heat pumps (**56**) (→ **Fig. 5.5**) , install the individual hydraulic components accordingly (→ **Fig. 5.9**).
- Connect a limit thermostat to ensure the underfloor heating function on the heat pump.
- Connect the VF2 flow temperature sensor to ensure the integral energy function.
- When starting up the unit, set Hydraulic Scheme No 4 in the controller.

You can choose to use the VPS/2 multi storage tank as a DHW tank.
- When connecting the hydraulics, observe the
  → **installation instructions** for the cylinder and the
  → **geoTHERM planning information**.

The 1" diverter valve supplied in the VPS/2 multi storage tank must be replaced by two 3-way diverter valves that must be installed on-site. The diverter valves must be connected to the LP/UV1 terminal on the controller PCB (**2**) (→ **Fig. 7.18**).

As of VWS/VWW 380/2, the VPS/2 1500 multi storage tank must be used.

The following only applies when installing the optional external passive cooling:

Caution!
Risk of malfunction in cooling mode.
The buffer tank must not be in operation during the cooling mode of the heat pump.
- Install a motor-driven 3-way diverter valve in both the flow and return so that the buffer tank is avoided in cooling mode.

Caution: Schematic only!
These examples of hydraulic schemes do not contain all of the shut-off and safety instruments that are required for correct installation.

- Observe the applicable standards and regulations.

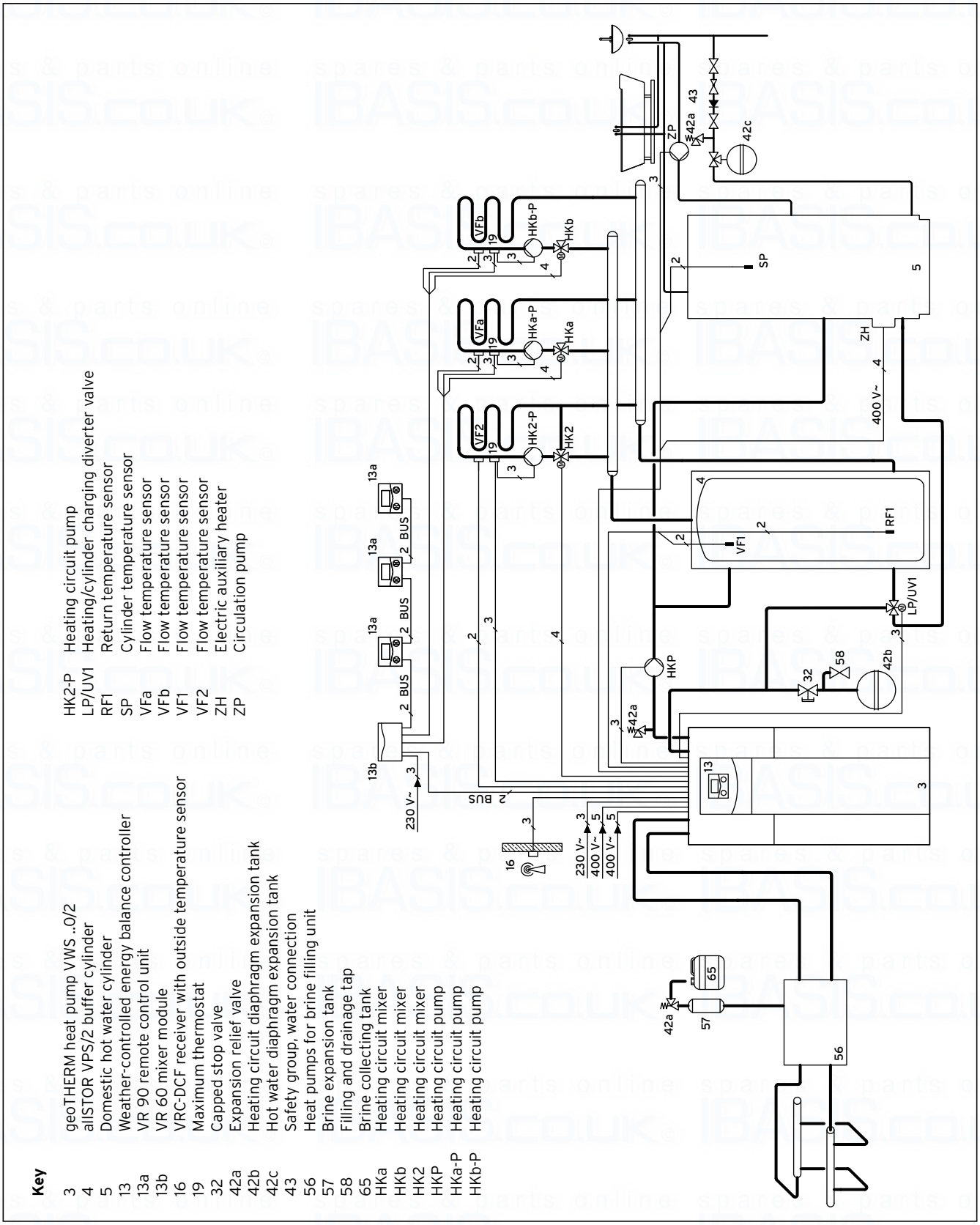

5.5 Sample hydraulic scheme: The mixed circuit with buffer tank and DHW tank

5.5 Installing the mixed circuit with buffer tank, DHW tank and external passive cooling (VWS only)

5.5.1 Description of functions for the heating mode with buffer tank, DHW tank and external passive cooling

The heating circuits are connected as a separating tank to the heat pump via a buffer tank and are operated using an external heating circuit pump via a heating circuit mixer. By default, this is controlled by a flow temperature setpoint control (→ **Ch. 9.4.3**).
The VF2 flow temperature sensor sits behind the diverter valve in the heating flow (because of the cooling function).
The heat pump responds to a demand for heat from the buffer tank.
The heat pump also operates a DHW tank.

5.5.2 Installation instructions

- Install the hydraulic components in accordance with the local requirements and as shown in the sample hydraulic scheme below.
- If you do not use the optional accessory heat pump brine filling unit for heat pumps (**56**) (→ **Fig. 5.6**), install the individual hydraulic components accordingly (→ **Fig. 5.9**). Dimension and install an external cooling heat exchanger.
- Connect a limit thermostat to ensure the underfloor heating function on the heat pump.
- Connect the VF2 flow temperature sensor to ensure the integral energy function.
- When starting up the unit, set Hydraulic Scheme No 10 in the controller.

You can choose to use the VPS/2 multi storage tank as a DHW tank.

- When connecting the hydraulics, observe the → **installation instructions** for the cylinder and the → **geoTHERM planning information**.

The 1" diverter valve supplied in the VPS/2 multi storage tank must be replaced by two 3-way diverter valves that must be installed on-site. The diverter valves must be connected to the LP/UV1 terminal on the controller PCB (**2**) (→ **Fig. 7.18**).

As of VWS/VWW 380/2, the VPS/2 1500 multi storage tank must be used.

The following only applies when installing the optional external passive cooling:

Caution!
Risk of malfunction in cooling mode.
The buffer tank must not be in operation during the cooling mode of the heat pump.

- Install a motor-driven 3-way diverter valve in both the flow and return so that the buffer tank is avoided in cooling mode.

Caution: Schematic only!
These examples of hydraulic schemes do not contain all of the shut-off and safety instruments that are required for correct installation.

- Observe the applicable standards and regulations.

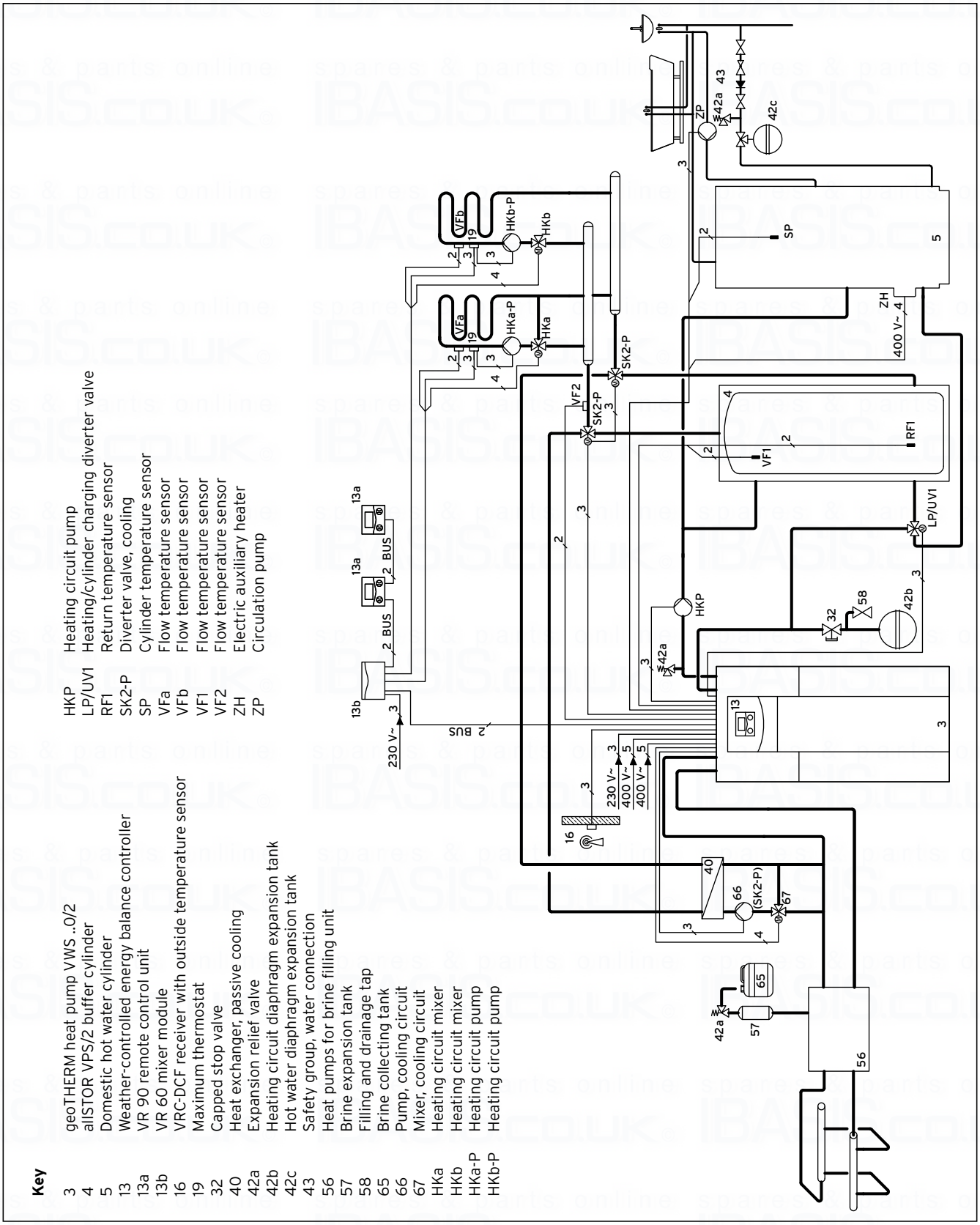

5.6 Sample hydraulic scheme: The mixed circuit with buffer tank, DHW tank and external passive cooling

5.6 Fitting the flexible connecting hoses

Caution!
Risk of damage caused by leaks.
If the seals with metal support rings are not used on the connections for the brine circuit/well water circuit (**3**) and (**4**) (→ **Fig. 5.8**), this may lead to leaks.
➤ Ensure that you use the correct seals on the connections.

- The pipes must be installed and the seals must be used in accordance with (→ **Fig. 5.8**).
- The installation must be carried out by a qualified heating engineer.

➤ During the installation, observe the applicable regulations.

Caution!
Risk of impaired function.
Air in the heating system leads to impaired operation and reduces the heating output.
➤ Fit bleed valves as required.

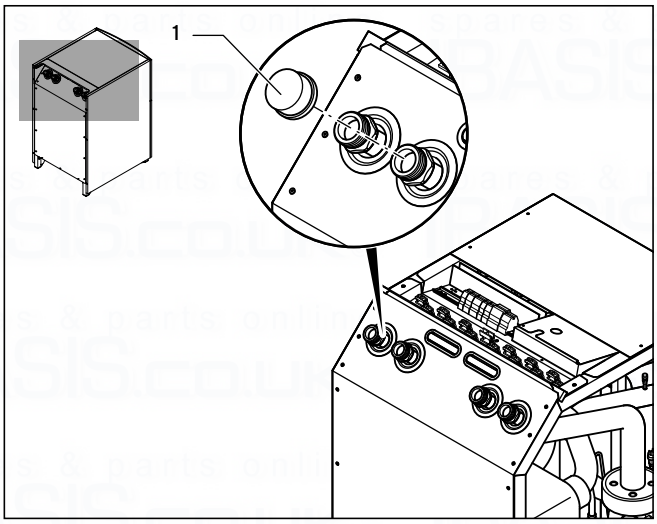

5.7 Removing the blind caps

➤ Remove the blind caps (**1**) from the unit's connections. These are no longer required and can be properly disposed of.

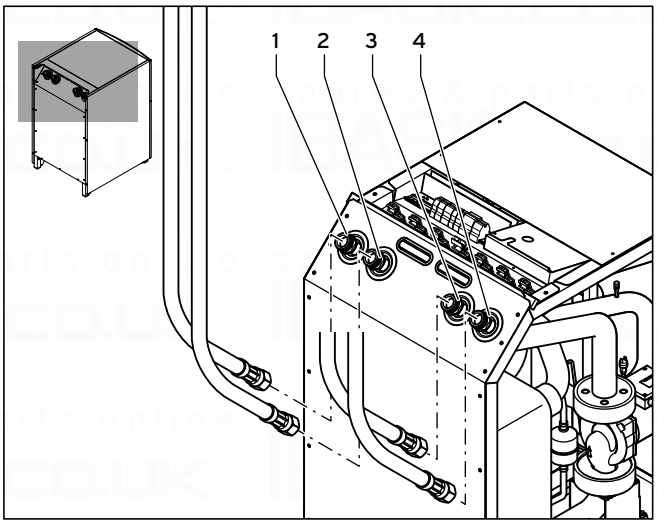

5.8 Fitting the flexible connecting hoses

Key
1 Heating flow
2 Heating return
3 From the heat source to the heat pump
4 From the heat pump to the heat source

➤ Fit two of the supplied flexible connecting hoses that have the yellow/green flat seals (from the fittings pack) to the heating circuit connections (**1** and **2**).
➤ Fit two of the supplied flexible connecting hoses that have the seals with metal support rings (from the fittings pack) to the brine/well water circuit connections (**3** and **4**).

5.7 Connect the heat pump to the heating circuit

Caution!
Risk of damage caused by condensation water.
Condensation can cause corrosion.
➤ Insulate all of the pipes in the heating circuit using vapour diffusion-tight insulation.

Caution!
Risk of damage caused by overpressure in the heating circuit.
During operation, overpressure may occur in the heating circuit.
➤ Fit an expansion vessel and an expansion relief valve in the heating circuit, as required below.

For installing the heating installation, EN 12828 requires the following:
- a filling valve, in order to fill the heating installation with water or to be able to drain water (installed in the unit at the factory).
- a diaphragm expansion tank in the return of the heating circuit,
- a safety overpressure valve (at least DN 20, opening pressure 3 bar) with a pressure gauge (safety group) in the supply of the heating circuit, immediately behind the heat pump,
- an air/dust separator in the return of the heating circuit.

Danger!
Risk of scalding from steam or hot water.
If there is overpressure, steam and/or hot water is blown out via the blow-off line of the safety overpressure valve.
➤ Install a blow-off line the same size as the outlet opening in such a way that there is no risk to people caused by steam and/or hot water when it is blown out.

➤ Install the blow-off line in a frost-free environment so that it always remains easily accessible and visible.

We recommend that you install a Vaillant safety group and a drain pipe.
➤ Fit the heating flow and return and all the components.
➤ Dimension and fit an external heating circuit pump (to be fitted on-site).
➤ If required, fit a heating/cylinder charging diverter valve (to be fitted on-site).
➤ Connect the flow pipe (**1**) (→ **Fig. 5.8**).
➤ Connect the return pipe (**2**) (→ **Fig. 5.8**).

5.8 Connecting the heat pump to the brine circuit (VWS only)

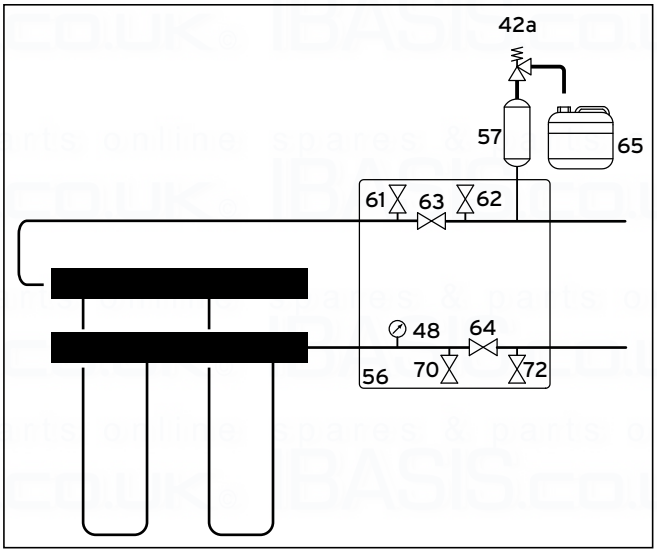

5.9 Fittings in the brine circuit

Key

42a	Expansion relief valve
48	Pressure gauge
56	Heat pumps for brine filling unit
57	Brine expansion tank
61	Stop valve
62	Stop valve
63	Stop valve
64	Stop valve
65	Brine collecting tank
70	Stop valve
72	Stop valve

Vaillant recommends that you install the Vaillant heat pump brine filling unit. By doing this, it is then possible to carry out a preparatory partial bleed of the brine circuit, e. g. the flow and return lines of the brine circuit to the unit.
➤ When installing this, observe the → **installation instructions** for the heat pump brine filling unit.

Caution!
Risk of malfunction!
Dirt filters may lead to flow rate problems and a reduction in the residual pump head for the brine pump.
➤ Do not install dirt filters for a prolonged period in the brine circuit. The brine fluid is cleaned during the filling process.

Caution!
Risk of damage caused by the formation of condensation.
Condensation on uninsulated brine pipelines within the building may lead to structural damage.
➤ You must insulate all brine pipelines using vapour diffusion-tight insulation.

➤ Fit the brine pipelines between the heat source and the heat pump along with all the associated components in accordance with the applicable technical guidelines.

To prevent freezing, use cold pipe clips to connect the brine pipelines to the heat pump.

➤ Connect the brine pipelines to the heat pump (**3**) and (**4**) (→ **Fig. 5.8**).
➤ Insulate all pipelines using vapour diffusion-tight insulation.

5.9 Fitting the brine expansion tank in the brine circuit (VWS only)

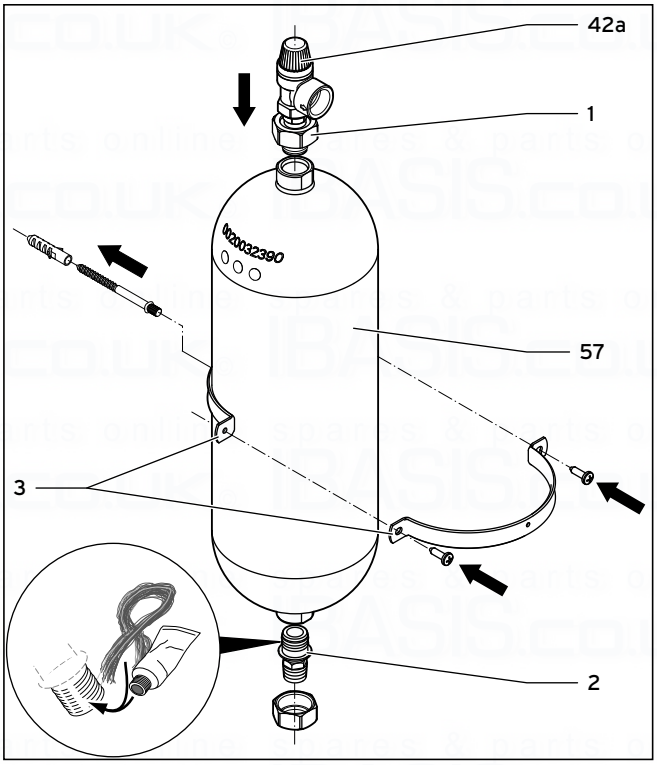

5.10 Fitting the brine expansion tank

Caution!
Risk of damage from escaping brine.
If the lower screw coupling on the brine expansion tank (**2**) has been sealed using Teflon tape or something similar, this may lead to leaks in the brine circuit.
➤ Seal this screw coupling with hemp.

The brine expansion tank from the accessories has a volume of approx. 6 litres and is therefore adequate for brine circuits up to a maximum of 500 litres. For larger volumes, other expansion tanks that are fitted on-site must be installed.

➤ Use the dowel and the screw to fit the bracket (**3**) for the expansion tank to the wall.
➤ Unscrew the prefitted connecting pieces (**1** and **2**) from the brine expansion tank (**57**).
➤ Put hemp on the outside thread of the lower connecting piece.
➤ Install the brine expansion tank with the lower connecting piece in the pipeline from the heat source to the heat pump.

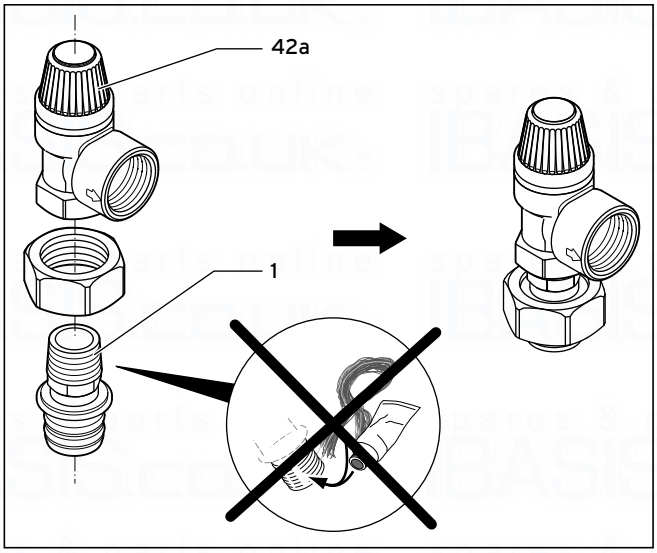

5.11 Fitting the expansion relief valve

- Seal the outside thread of the upper connecting piece (**1**) using a sealant, e.g. Teflon tape.
- Fit the connecting piece to the 3 bar expansion relief valve (**42a**) that is attached to the heat pump.
- Fit the upper connecting piece with the expansion relief valve to the brine expansion tank.
- Use the bracket to fix the brine expansion tank.
- Connect a hose/pipeline to the expansion relief valve. Allow the end of the hose to be open in the brine collecting tank.
- Install the brine expansion tank (**65**) (→ **Fig. 5.9**) without pressure on the expansion relief valve (**42a**).
  The brine collecting tank must not be completely closed because, otherwise, it cannot be guaranteed that the expansion relief valve will work.

5.10 Connecting the heat pump to the well water circuit (VWW only)

In most cases, if well water is used as the heat source, the well system must be run using suction and injection wells.

The ends of the pipelines of the suction and injection wells must lie deep enough below the well water surface to prevent the water from taking in oxygen from the air. This oxygen leads to the coagulation of iron and manganese that is dissolved in the water and this, in turn, may lead to deposits in the injection well and the heat exchanger in the heat pump.

- In the suction well, install the well pump (immersion pump) that must be installed on-site. Follow the well pump installation and assembly instructions in this respect.

The electrical connection for the well pump is described in (→ **Ch. 7.3.4**).

- Fit the well water pipelines along with all the associated components in accordance with the applicable technical guidelines.

Caution!
Risk of damage caused by solid particles.
Solid particles (e. g. sand) in the well water may clog the evaporator.
- In the inflow to the heat pump, install a flushable fine filter (mesh width 100 - 120 µm).

- Connect the well water pipelines to the heat pump (**3**) and (**4**) (→ **Fig. 5.8**).
- Insulate all pipelines using vapour diffusion-tight insulation.

Caution!
Risk of damage caused by negative pressure.
Negative pressure in the well water pipelines may cause damage to the flexible hoses within the heat pump.
- Ensure that there cannot be any negative pressure in the pipelines when operating and after switching off the well pump.

6 Filling the heating and heat source circuit

Before you can start operating the heat pump, the heating circuit and the brine circuit (VWS only) must be filled.
If you use well water as the heat source (VWW only), the heat source circuit does not have to be filled and bled because this is an open system.

6.1 Filling regulations

Mixing additives with the heating water can result in material damage. However, no incompatibility with Vaillant appliances has been detected with proper use of the following products over a long period.

➤ Observe the manufacturer's instructions regarding additives if you are using these.

Vaillant accepts no liability for the compatibility of any additives in the rest of the heating installation or for their effect

Additives used for cleaning (subsequent flushing is required)

- Fernox F3
- Sentinel X 300
- Sentinel X 400

Additives intended to remain permanently in the system

- Fernox F1
- Fernox F2
- Sentinel X 100
- Sentinel X 200
- Fernox Antifreeze Alphi 11
- Sentinel X 500

Additives for frost protection intended to remain permanently in the system

- Fernox Antifreeze Alphi 11
- Sentinel X 500

➤ Inform the operator about the measures that are required if these additives have been used.

➤ Inform the operator about the behaviour that is required for frost protection.

➤ You must comply with the applicable national regulations and technical standards for preparing the filling and make-up water.

Provided the national regulations and technical standards do not make any greater demands, the following applies:

➤ You must prepare the heating water,
- if the entire amount of filling and make-up water exceeds three times the nominal capacity of the heating installation throughout the service life of the system or
- if the limit values in the following tables are not complied with.

Total heating output	Overall hardness for the smallest boiler screen surfaces[1]		
	20 l/kW	> 20 l/kW < 50 l/kW	> 50 l/kW
kW	mol/m³	mol/m³	mol/m³
< 50	No change or < 3[1]	2	0.02
> 50 to 200	2	1.5	0.02

1) on systems with circulation water heaters and for systems with electric heating elements

2) from the specific system volume (nominal capacity in litres/heating output; the lowest heating output must be used for multiple boiler installations). These specifications only apply up to three times the system volume for filling and make-up water. If three times the system volume is exceeded, the water must be treated in accordance with the specifications from the VDI (softening, desalting, hardness stabilisation or blowing down). This is exactly the same as if the limit values in Table 6.1 were exceeded.

6.1 Guide values for the heating water: water hardness

Heating water characteristics	Unit	Low-salt	Saline
Electrical conductivity at 25 °C	µS/cm	< 100	100 - 1500
Appearance		free of sedimentary materials	
pH value at 25 °C		8.2 - 10.0[1]	8.2 - 10.0[1]
Oxygen	mg/l	< 0.1	< 0.02

1) For aluminium and aluminium alloys, the pH range is restricted from 6.5 to 8.5.

6.2 Guide values for the heating water: Salt content

Caution!
Risk of material damage if the heating water is treated with unsuitable frost or corrosion protection agents!
Frost and corrosion protection agents can cause changes in the seals, noises during heating and possibly subsequent damage.
➤ Do not use any unsuitable frost or corrosion protection agents.

6.2 Filling and bleeding the heating circuit

Caution!
The function will be impaired if the circuit is not bled enough.
Built-up air may lead to insufficient flow and there may be noises in the heating circuit.
➤ Ensure that the cylinder charging circuit of the DHW tank is also bled.

➤ Open all thermostatic radiator valves in the heating installation and, if required, open all other stop valves.
➤ If a DHW tank has been connected, move the external heating/cylinder charging diverter valve into the centre position.
➤ If required, move any other externally-installed diverter valves into the centre position.
➤ Connect a filling loop to a tap.
➤ To do this, remove the screw cap from the filling and drain valve for the heating circuit and fix the free end of the filling loop to this.
➤ Open the filling and drain valve for the heating circuit.
➤ Slowly turn the tap on and fill with water until the pressure gauge (on-site) has reached a heating installation pressure of approx. 150 kPa (1.5 bar).
➤ Close the filling and drain valve for the heating circuit.
➤ Bleed the heating circuit at the locations provided for this.
➤ Check the heating circuit's water pressure again (if required, repeat the filling procedure).
➤ Remove the filling loop from the filling and drain valve and put the screw cap back on.
➤ Move all of the diverter valves into their initial position.

6.3 Filling and bleeding the brine circuit (VWS only)

6.3.1 Preparing the filling procedure

Danger!
Risk of explosion and combustion!
The brine fluid ethanol is extremely flammable, both as liquid and steam. A potentially explosive combination of steam/air may accumulate.
➤ Keep away from heat, sparks, naked flames and hot surfaces.
➤ Ensure that there is sufficient ventilation in the event of accidental release.
➤ Avoid the accumulation of steam/air mixtures. Keep brine fluid containers closed.
➤ Observe the safety data sheet that accompanies the brine fluid.

Danger!
Risk of injury due to chemical burns!
Brine fluids are harmful to health.
➤ Avoid contact with the skin and eyes.
➤ Do not inhale or swallow.
➤ Always wear gloves and protective goggles.
➤ Observe the safety data sheet that accompanies the brine fluid.

Caution!
The function will be impaired if the circuit is not bled enough.
Built-up air leads to significant efficiency losses.
➤ Ensure that the brine circuit is bled enough.

Caution!
The function will be impaired if unsuitable brine fluids are used.
➤ Only use the specified brine fluids.

To fill the brine circuit, you require a filling pump that can bleed the brine circuit at the same time as it fills it. Vaillant recommends the Vaillant filling device (mobile with dirt filter) or the Vaillant filling pump.

The individual steps of the filling and bleeding procedure when using the Vaillant heat pump brine filling unit are described below. The brine filling unit allows you to carry out a preparatory partial bleed of the brine circuit and to fill and bleed in one operation.

The brine fluid consists of water mixed with a heat transfer fluid concentrate. We recommend that you add propylene glycol (alternatively: ethylene glycol) with corrosion-inhibiting additives.
The brine fluids that may be used differ greatly from region to region. Please find out about this from the authorities responsible.
Only the following brine fluids are authorised by Vaillant for operation of the heat pump:
- Aqueous solution with 30 % ±1 % vol. ethylene glycol
- Aqueous solution with 33 % ±1 % vol. propylene glycol
- Aqueous solution with 30 % ±1 % vol. ethanol
- Ready-to-use potassium carbonate/water solution

Caution!
Risk of damage caused by leaking.
If external passive cooling is installed and if you use potassium carbonate as a component of the brine fluid, this may lead to interactions with the sealing plastics that are used in the mixer valve.
➤ If external passive cooling is installed, you must only use ethylene glycol, propylene glycol or ethanol as a component of the brine fluid.

This means that the brine fluid has frost protection of - 15 °C.
A DN 40 collector hose has a capacity of approx. 1 litre per continuous metre.

➤ Use a sufficiently large mixing container.
➤ If you use the Vaillant heat transfer fluid concentrate: Mix 1.2 % propylene glycol with water at a ratio of 1 : 2.
If you use other heat transfer fluid concentrates: Mix the water and the frost protection agent to the prescribed concentration.
➤ Mix each mixing batch carefully.
➤ Check the mixture ratio of the brine fluid. Vaillant recommends the use of a refractometer for this purpose.

Caution!
The function will be impaired if the brine pipe system is contaminated.
➤ When filling and flushing the system, use a dirt filter before the filling pump. By doing this, you ensure that dirt from wear is completely removed from the pipes of the brine circuit and this guarantees long-lasting trouble-free operation of the pump.

6.3.2 Filling and bleeding the outer part of the brine circuit

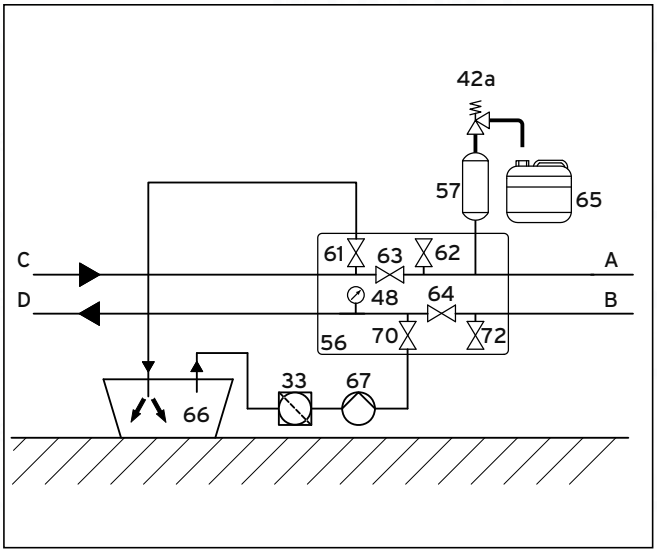

6.1 Filling and bleeding the outer part of the brine circuit

Key to Fig. 6.1 - 6.3

33	Dirt filter
42a	Expansion relief valve
48	Pressure gauge
56	Heat pumps for brine filling unit
57	Brine expansion tank
61	Stop valve
62	Stop valve
63	Stop valve
64	Stop valve
65	Brine collecting tank
66	Brine container
67	Filling pump
70	Stop valve
72	Stop valve
A	Fig. 5.8, Pos. 3
B	Fig. 5.8, Pos. 4
C	From the heat source to the heat pump
D	From the heat pump to the heat source

➤ Close the stop valves (**63**) and (**64**).
➤ Connect the filling pump's pressure line (**67**) to the stop valve (**70**).
➤ Connect a hose that leads to the brine fluid to the stop valve (**61**).
➤ Open the stop valves (**61**) and (**70**).
➤ Start the filling pump (**67**) in order to fill the brine circuit with the brine fluid from the brine container (**66**) via the dirt filter (**33**).
➤ Allow the filling pump (**67**) to run until there is no air in the brine fluid that escapes from the hose at the stop valve (**61**).
➤ Close the stop valve (**70**).
➤ Switch off the filling pump and close the stop valve (**61**).
➤ Remove the hoses from the stop valves (**61**) and (**70**).
The stop valves (**63**) and (**64**) must remain closed.

6.3.3 Filling and bleeding the inner part of the brine circuit

If the outer part of the brine circuit has already been filled and bled, it is sufficient to finally fill and bleed the inner part of the unit. Any air pockets in the pipelines between the stop valves are negligible and are removed by subsequent bleeding when starting up the unit.

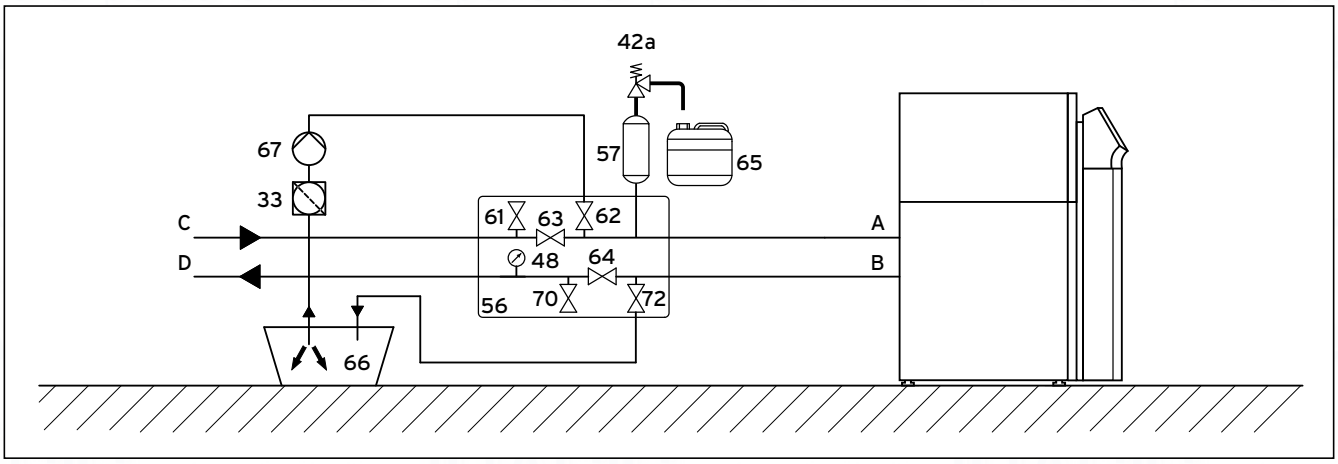

6.2 Filling and bleeding the inner part of the brine circuit

- Ensure that the stop valves (**63**) and (**64**) are closed.
- Connect the filling pump's pressure line (**67**) to the stop valve (**62**).
- Connect a hose that leads to the brine fluid to the stop valve (**72**).
- Open the stop valves (**62**) and (**72**).
- Start the filling pump (**67**) in order to fill the brine circuit with the brine fluid from the brine container (**66**) via the dirt filter (**33**).
- Allow the filling pump (**67**) to run until there is no air in the brine fluid that escapes from the hose at the stop valve (**72**).
- Close the stop valve (**62**).
- Switch off the filling pump and close the stop valve (**72**).
- Remove the hose from the stop valve (**72**).

6.3.4 Filling and bleeding the entire brine circuit in one operation

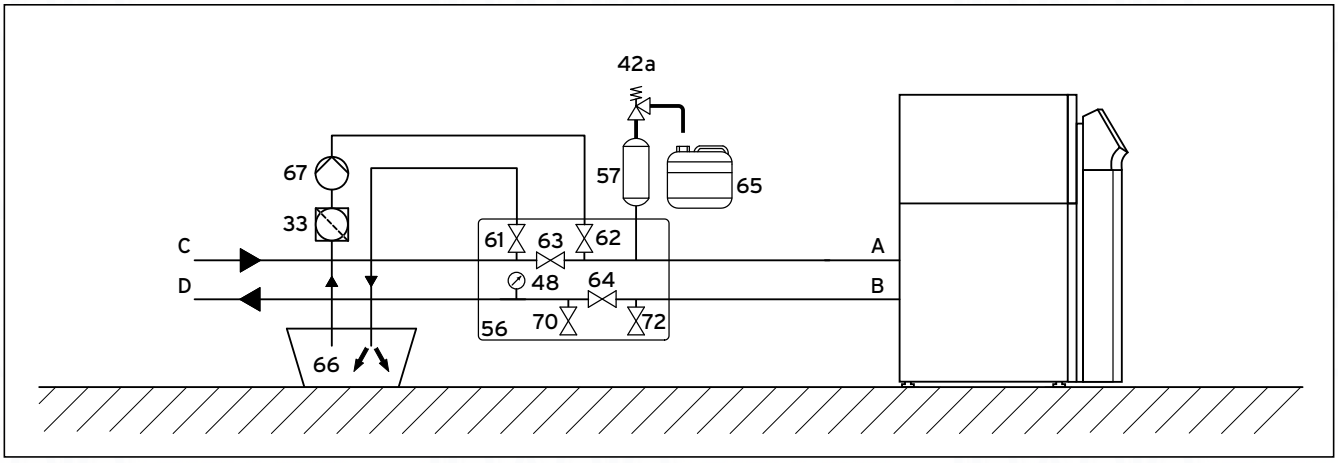

6.3 Filling and bleeding the entire brine circuit in one operation

- Close the stop valves (**63** (**70**) and (**72**).
- Connect the filling pump's pressure line to the stop valve (**62**).
- Connect a hose that leads to the brine fluid to the stop valve (**61**).
- Open the stop valve (**64**).
- Open the stop valves (**61**) and (**62**).
- Start the filling pump (**67**) in order to fill the brine circuit with the brine fluid from the brine container (**66**) via the dirt filter (**33**).
- Allow the filling pump (**67**) to run until there is no air in the brine fluid that escapes from the hose at the stop valve (**61**).
- Close the stop valve (**62**).
- Switch off the filling pump and close the stop valve (**61**).
- Remove the hose from the stop valve (**61**).

6.3.5 Building up pressure in the brine circuit

To operate the brine circuit without any problems, a fill pressure of between 150 and 200 kPa (1.5 and 2.0 bar) is required. The expansion relief valve discharges at 300 kPa (3 bar).

- If required, open all the other stop valves that are not shown in (→ **Fig. 6.3**).
- Open the stop valve (**63**) (→ **Fig. 6.3**) so that the air in the pipeline between the stop valves (**61**) and (**62**) (→ **Fig. 6.3**) can escape.
- If required, open the stop valve (**64**) (→ **Fig. 6.3**), which can still be closed again due to any partial bleeding, so that air in the pipeline between the stop valves (**70**) and (**72**) (→ **Fig. 6.3**) can escape.

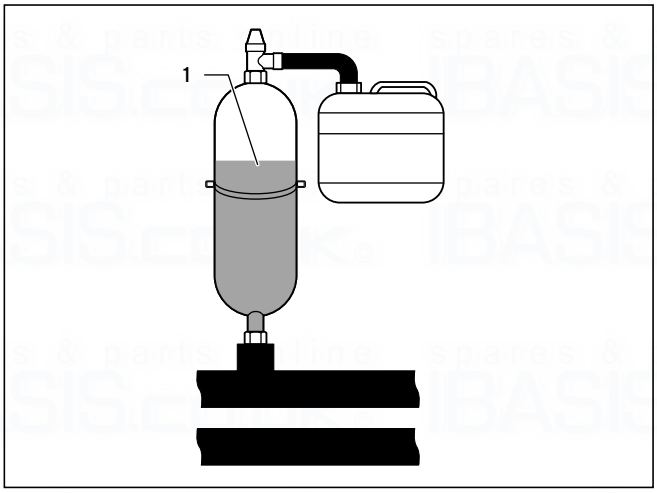

6.4 Füllstand des Sole-Ausgleichsbehälters prüfen

- Close the stop valve (**61**) (→ **Fig. 6.3**) and use the filling pump (**67**) (→ **Fig. 6.3**) to pressurise the brine circuit until the brine expansion tank (**1**) is filled to no more than two thirds of its capacity and the pressure does not exceed 300 kPa (3 bar).
- Now also close the stop valve (**62**) (→ **Fig. 6.3**).
- Switch off the filling pump (**67**) (→ **Fig. 6.3**).
- Open the expansion relief valve (**42a**) (→ **Fig. 6.3**), in order to allow any overpressure to escape if it is above the required fill pressure of 200 kPa (2,0 bar) and below the expansion relief valve's operating pressure of 300 kPa (3 bar). The brine expansion tank must be two thirds full of fluid.
- If required, repeat the process.
- Remove the hose from the stop valve (**62**).

The system is also bled after the heat pump is started up (→ **Ch. 8.1.4** and → **Ch. 8.1.5**).

- If there is any brine fluid left over, store this in a suitable container (e. g. a plastic canister) for subsequent replenishment.
- Label the container with the specifications regarding the type of brine fluid and the set concentration.
- Pass the container on to the operator to be stored.
- Point out to the operator that there is a risk of injury when handling brine fluid.

6.4 Filling the DHW tank, if required

- Open the cold water inlet pipe to a connected DHW tank.
- Open a domestic hot water draw-off point.
- Close the domestic hot water draw-off point as soon as water escapes.
- Then open all of the other domestic hot water draw-off points until water escapes before closing them again.

7 Electrical installation

Danger!
Risk of electric shock!
- Always switch off the power supply to all circuits before carrying out any electrical installation work.
- Check that there is no voltage.
- Make sure that the power supply is secured against being inadvertently switched on again.

Caution!
Risk of damage caused by improper electrical installation.
The electrical installation must only be carried out by an approved qualified electrician.
- Carry out the described installation work correctly.

Caution!
Risk of damage caused by an inadequate separator.
You must be able to switch off the electrical connection using an on-site, three-pole, adjustable separator with a contact opening of at least 3 mm (e. g. circuit breaker). The separator must provide coupled fuses so that all other fuses also switch off if one fuse drops.
- Ensure that a corresponding separator is available on site.

Caution!
Risk of short circuits!
If lines longer than 30 mm are stripped, short circuits may occur on the PCB if the lines are correctly secured in the plug.
- Strip the 230 V lines in order to connect to the ProE plug. For safety reasons, do not strip the lines to any more than 30 mm and ensure that they are secure in the plug.

Caution!
Risk of malfunction due to improper running of lines.
The lines for the external sensor, eBUS and room thermostat carry low voltages. Environmental interferences may affect the sensor lines and send incorrect information to the heat pump controller.
- Lay low-voltage lines, such as sensor lines, on-site in the building so that they are a suitable distance from the power lines. If low-voltage lines and mains voltage lines are laid in parallel, a minimum clearance of 25 cm applies for a length of 10 m.

7.1 Observing the installation instructions

- Use the values for the maximum rated power that are specified in the technical data to determine the required line cross sections .
- In each case, take into consideration the on-site installation conditions.
- Install the heat pump using a secure mains connection.
- Install the separator right next to the heat pump.
- For the electricity supply, connect the heat pump to a three-phase 400 V power system with a **neutral line and an earth line**.
- Fuse this connection using the exact values that are specified in the technical data (→ **Tab. 14.1** or → **Tab. 14.2**).
- Connect an external, heating circuit pump (to be fitted on-site) with I_{max} = 2 A and U_{max} = 230 V. If these values are exceeded, install a relay/circuit breaker that is to be fitted on-site and switch the pump using this.
- If the local power company requires that the heat pump is controlled using a blocking signal, fit a corresponding contact switch as prescribed by the power company (→ **Ch. 7.3.2**).
- Ensure that the sensor lines, e. g. VRC DCF receiver, do not exceed the maximum line length of 50 m.
- Guide supply lines with mains voltage separately from sensor or bus lines from a length of 10 m. If this is not possible, use shielded lines. Lay the shielding on one side of the sheet for the heat pump's switchbox.
- Do not use free terminals on the heat pump as base terminals for further wiring.

You can find an overview of the complete electrical circuit diagram in (→ **Ch. 17**).

7.2 Electronic switchbox

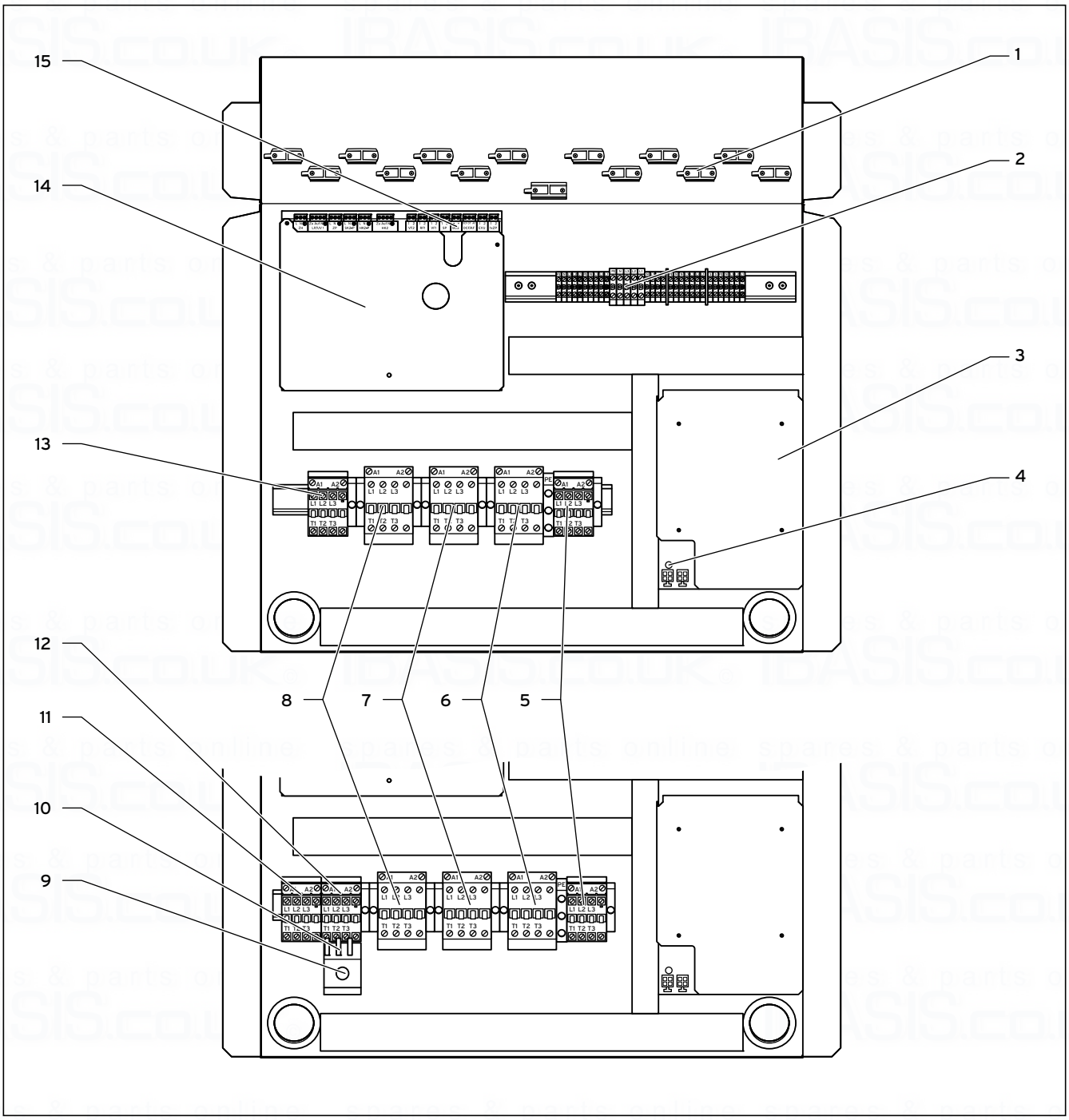

7.1 Electronic switchbox VWS and VWW 220/2 - 300/2

Key

1 Strain relief clamps
2 Electricity supply connection terminals
3 In-rush current limiter
4 Green LED for voltage supply
5 Protection for external electrical auxiliary heater
6 Compressor protector contactor
7 Compressor control contactor
8 In-rush current limiter contactor
9 VWW only: Control button for well pump overcurrent
10 VWW only: thermal overcurrent relay
11 VWW only: Well pump control contactor
12 VWW only: Well pump protector contactor with overcurrent relay (motor protection)
13 (VWS only) Protector contactor, brine pump
14 Controller PCB
15 Connection strip for sensors and external components

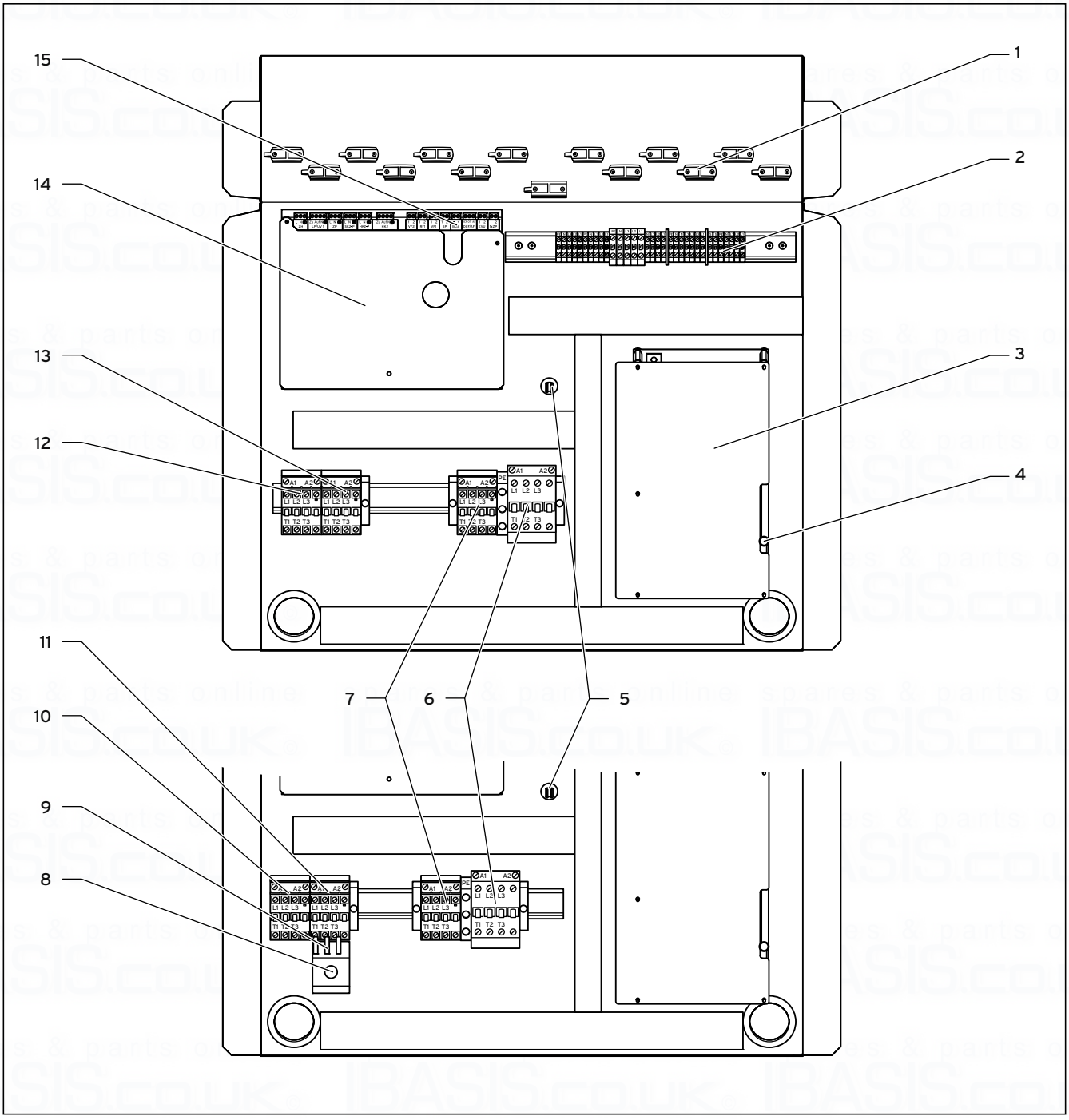

7.2 Electric switchbox VWS and VWW 380/2 - 460/2

Key

1 Strain relief clamps
2 Electricity supply connection terminals
3 In-rush current limiter
4 LEDs: green = voltage supply, yellow = compressor motor, red = fault display
5 In-rush current limiter spare fuse
6 Compressor protector contactor
7 Protection for external electrical auxiliary heater
8 VWW only: Control button for well pump overcurrent
9 VWW only: thermal overcurrent relay
10 VWW only: Well pump control contactor
11 VWW only: Well pump protector contactor with overcurrent relay (motor protection)
12 VWS only: control contactor, brine pump
13 (VWS only) Protector contactor, brine pump
14 Controller PCB
15 Connection strip for sensors and external components

You can find the configuration of the terminals on the controller PCBs (**14**) (→ **Fig. 7.1** and → **Fig. 7.2**) in (→ **Ch. 7.4**) . You can find the configuration of the terminals (**2**) in (→ **Ch. 7.3**).

Additionally, there are two coiled cables hanging inside the electronic switchbox (not shown here):
- small two-pole plug:
  eBUS supply line eBUS for operating panel
- large three-pole plug:
  230 V electricity supply for vrnetDIALOG for the installation on the mounting plate below the cover column

A control cable for the vrnetDIALOG is also supplied (equipment pack).

7.3 Connecting the electricity supply

➤ Guide the power supply line(s) through the cable lead-through above the pipe connections (**1**) (→ **Fig. 3.4**).
➤ Guide the lines through the appropriate strain relief clamps and to the terminals on the terminal strip.
➤ Wire the connections as illustrated in the connection diagram.
➤ Tighten the strain relief clamps.

The power companies provide various types of power supply for heat pumps. The heat pump can be operated with various types of mains feed. Two types of connection are described in the following pages.

7.3.1 Unblocked mains supply (electric wiring diagram 1)

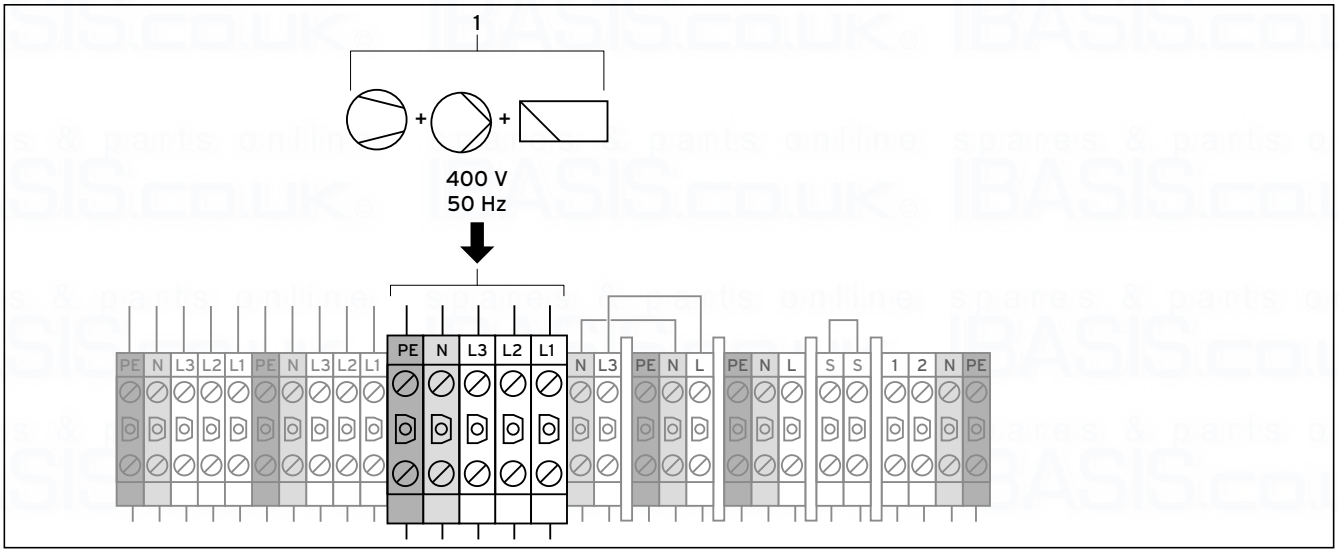

7.3 Unblocked mains supply VWS electric wiring diagram 1 (as delivered)

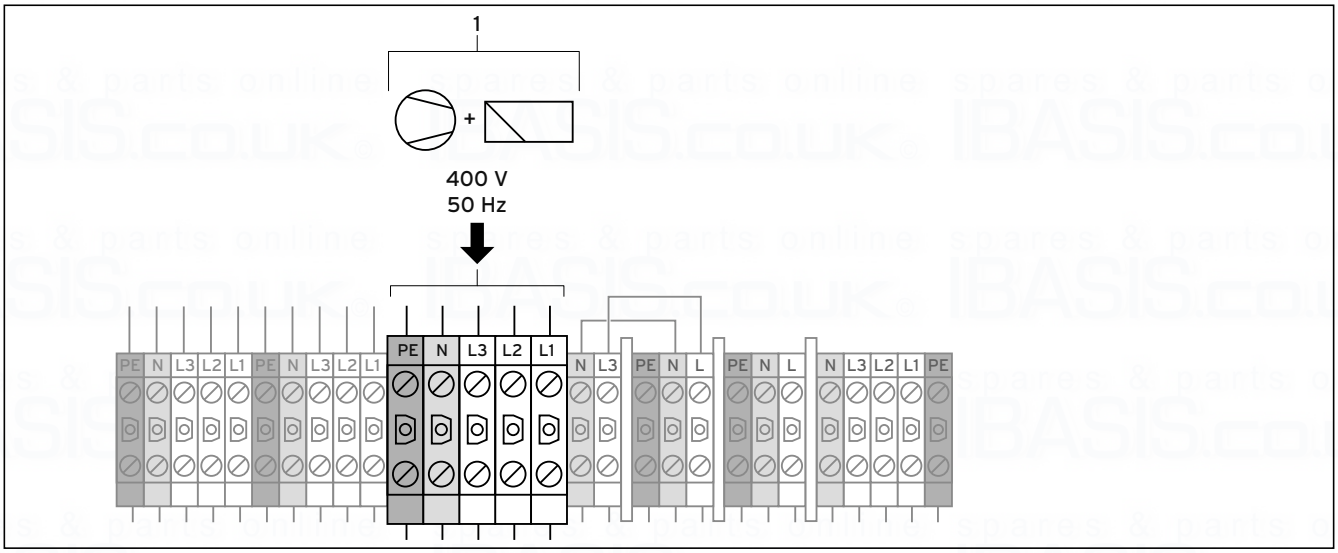

7.4 Unblocked mains supply VWW electric wiring diagram 1 (as delivered)

Key

Pump (brine circuit pump)

Compressor

Controller

This is how the heat pump is wired when delivered.
The heat pump is connected to the supply network using a single electricity rate (a consumption meter) (**1**).

➤ Connect the electricity supply to the primary mains supply (**1**).

7.3.2 Duel-circuit supply heat pump rate (electric wiring diagram 2)

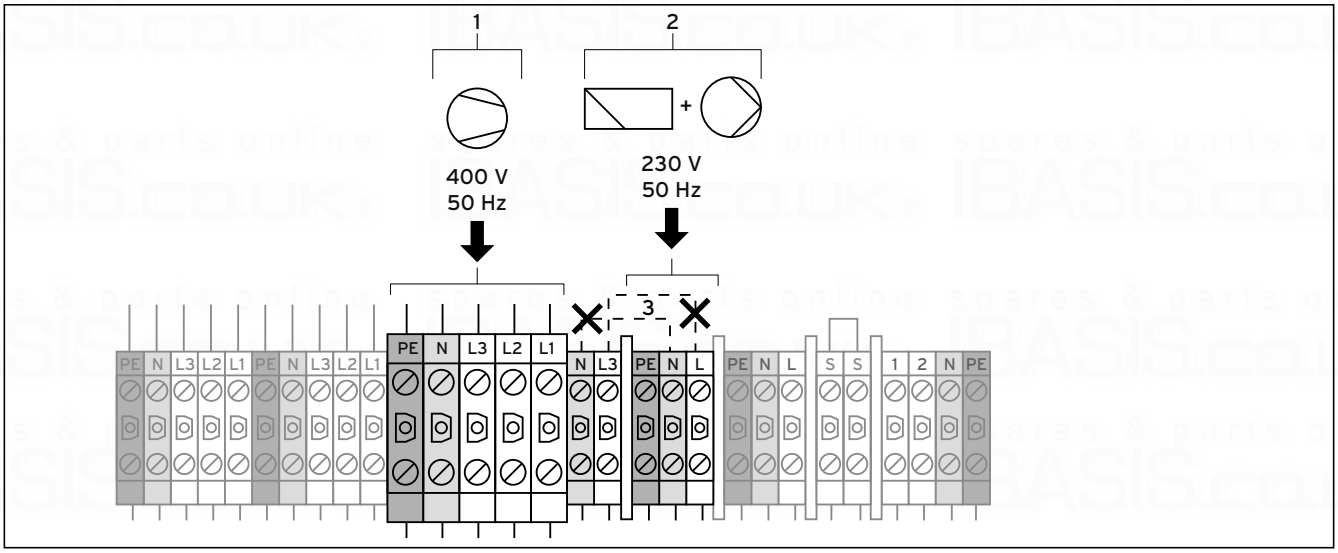

7.5 Duel-circuit supply VWS heat pump rate

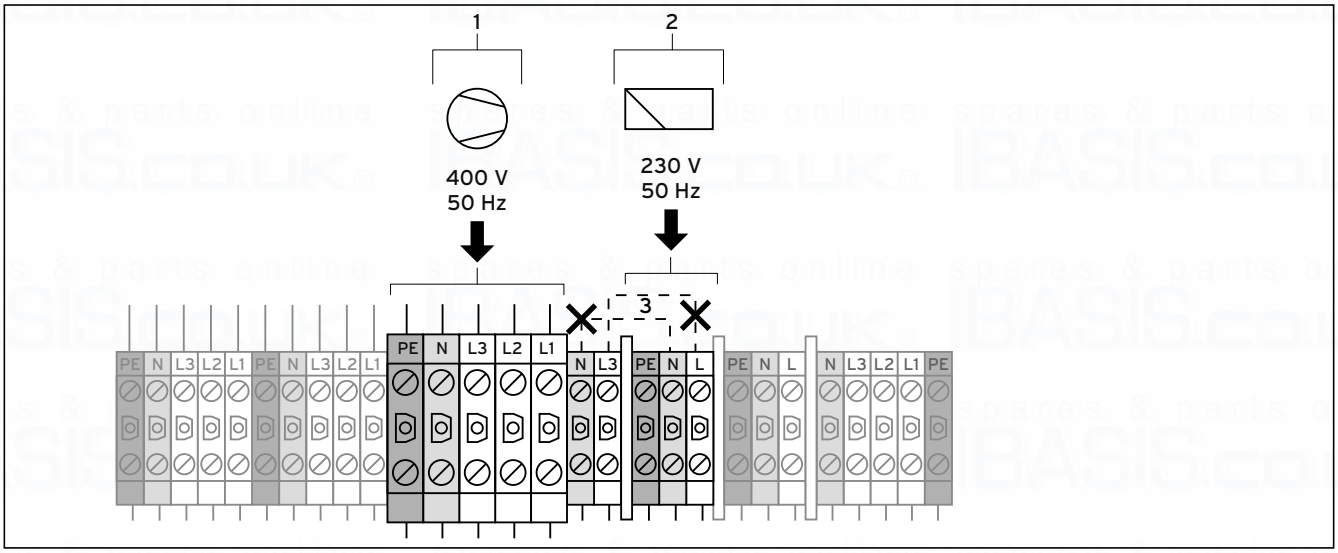

7.6 Duel-circuit supply VWW heat pump rate

Key

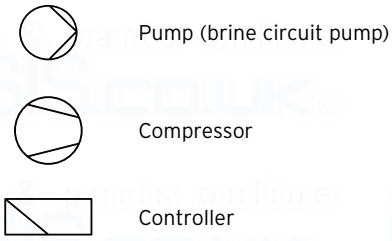

In this case, the heat pump is operated using two electricity rates (two consumption meters). A permanent standard rate electricity supply (**2**) ensures the operation of the **auxiliary consumers (circulation pumps, controllers, etc.)** across a separate electricity meter. The additional **reduced rate electricity (1) for the compressor** is supplied via a second electricity meter and can be suspended by the power company at peak times.
The duration and frequency of the lock-out is determined by the power company or must be clarified with them.

- ➤ Remove the bypass pipework (dashed lines, **3**).
- ➤ Connect the permanent electricity supply to the standard rate mains supply (**2**).

- Connect the standard rate electricity supply to the reduced rate mains supply (**1**).
- Connect the contact of the control system signal receiver to terminal 13 "EVU" (energy supplier) (→ **Fig. 7.18**).

7.3.3 Connecting the external heating circuit pump

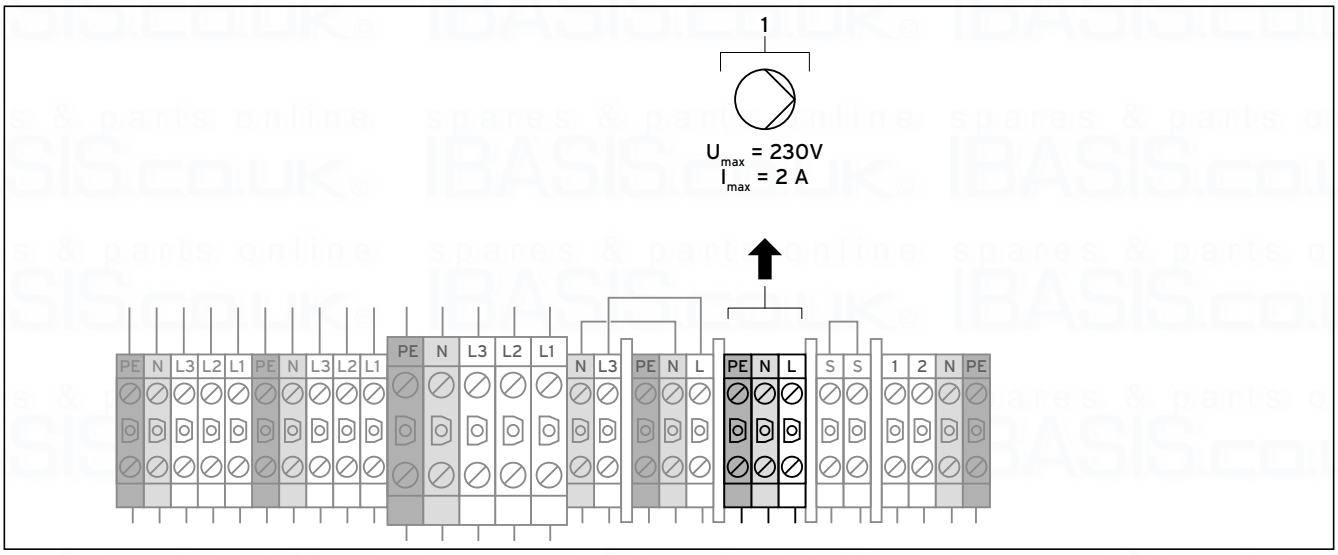

7.7 Connecting the external heating circuit pump VWS

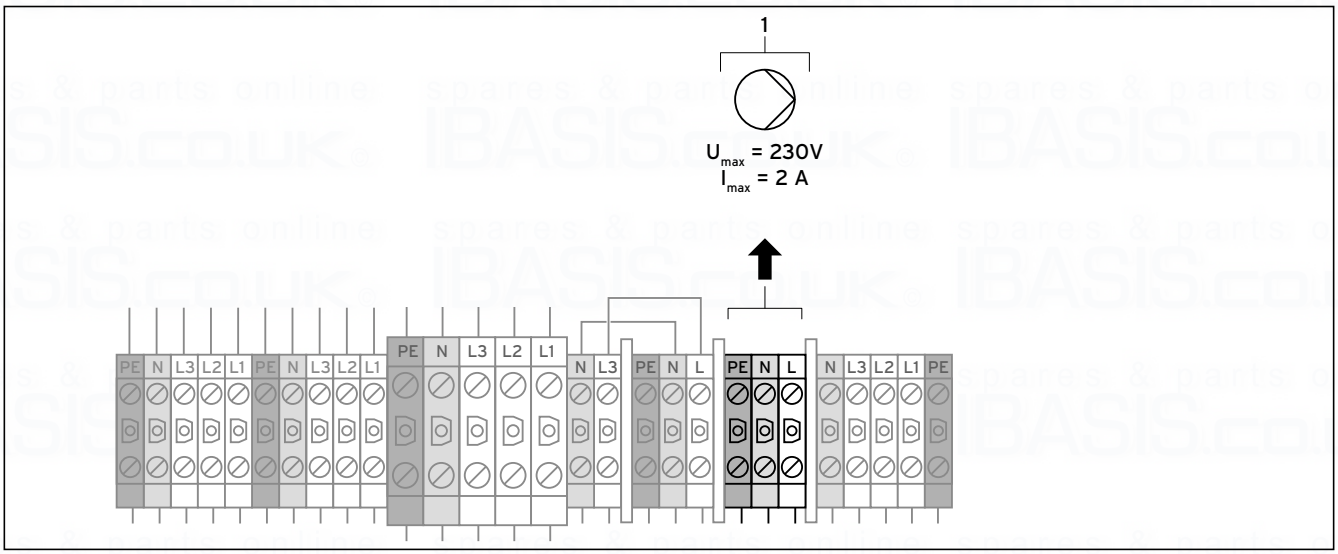

7.8 Connecting the external heating circuit pump VWW

Key

Pump (heating circuit pump)

- Connect the external, heating circuit pump (to be fitted on-site) with I_{max} = 2 A and U_{max} = 230 V **1**. If these values are exceeded, install a relay/circuit breaker that is to be fitted on-site and switch the pump using this.

7.3.4 Connecting the external well pump (VWW only)

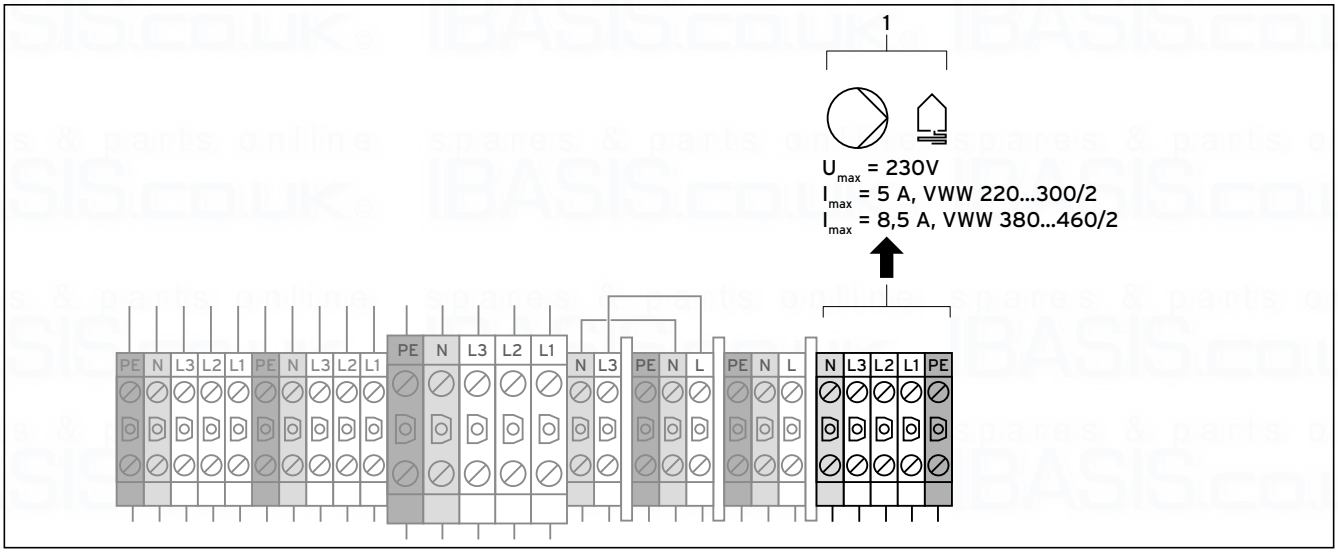

7.9 Connecting the external well pump (VWW only)

Key

Pump (well water circuit pump)

Heat source circuit

The well pump is supplied with a three-phase 400 V voltage via the well pump protector contactor (**12**) (→ **Fig. 7.1**) or (**11**) (→ **Fig. 7.2**).
An overcurrent relay (motor protection switch) (**10**) (→ **Fig. 7.1**) or (**9**) (→ **Fig. 7.2**) secures the external well pump against overload.

➤ Connect the well pump that is to be installed by the customer to the terminals (**1**).

Caution!
Risk of damage from overload.
The overcurrent relay (motor protection switch) must be correctly adjusted to the rated current of the well pump in order to protect the pump against overload.

➤ Use the control button (**9**) (→ **Fig. 7.1**) or (**8**) (→ **Fig. 7.2**) on the overcurrent relay to set the breaking current to 10 % above the rated current of the well pump (0.8 - 2.7 A).

7.3.5 Connecting the external electric auxiliary heater (optional)

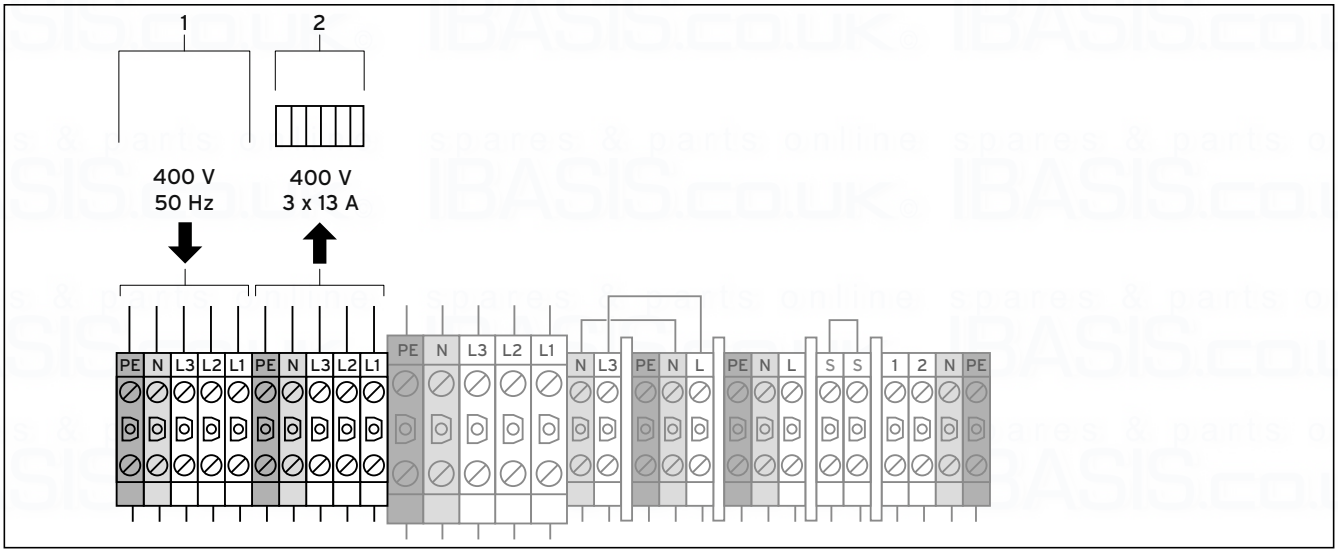

7.10 Connecting the external electric auxiliary heater (optional) VWS

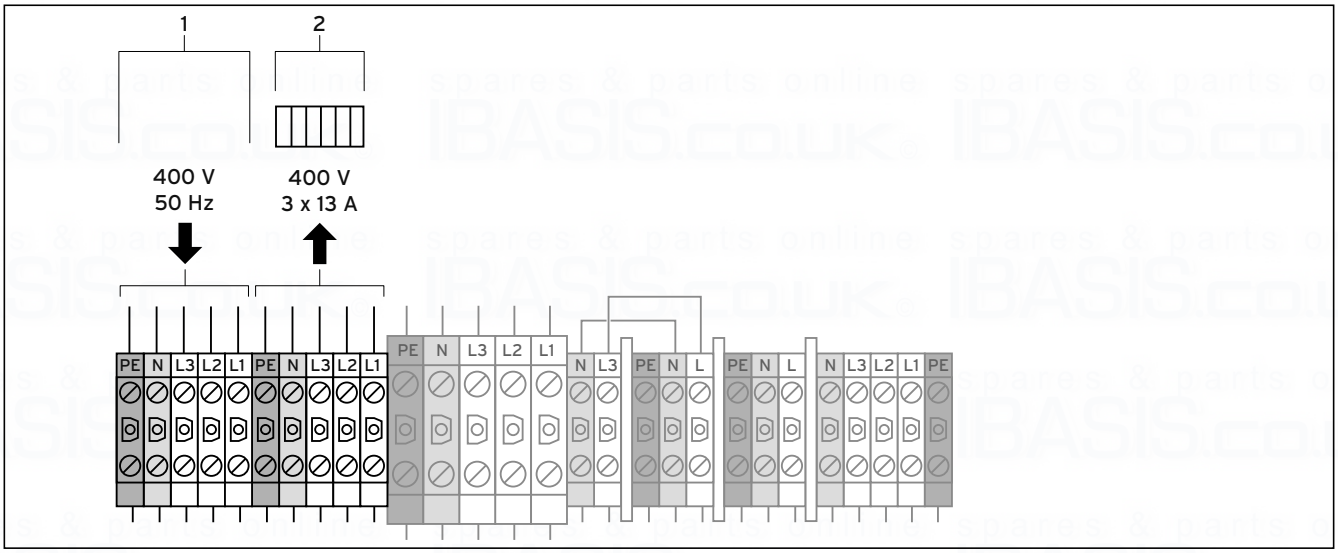

7.11 Connecting the external electric auxiliary heater (optional) VWW

Key

Electric auxiliary heating

You can choose to connect an external electric auxiliary heater (to be fitted on-site) to the heating boost function in emergency operation .

Caution!
Risk of damage from overload.
The maximum output of the electric auxiliary heater must not exceed 3 x 3 kW (3 x 13 A).

- ➤ Protect the electric auxiliary heater using a safety thermostat (to be fitted on-site) that does not automatically reset and has all poles disconnected.

- ➤ Connect the electricity supply for the electric auxiliary heater (**1**).
- ➤ Connect the electric auxiliary heater yourself (**2**).

7.3.6 Connecting the limit thermostat (unblocked mains supply)

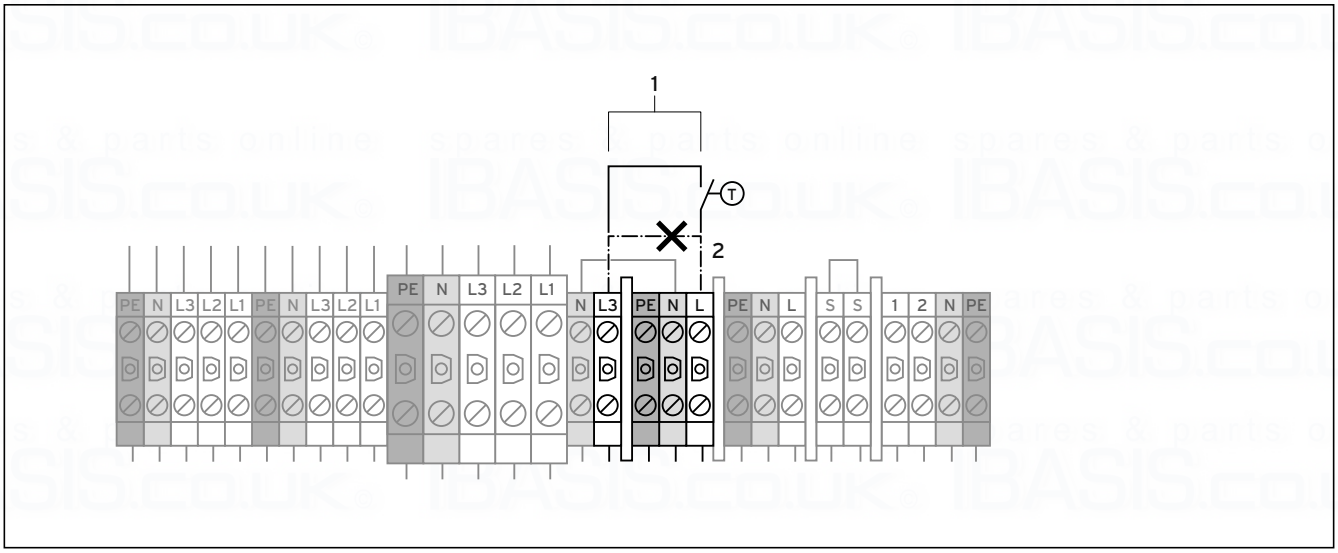

7.12 Connecting limit thermostats VWS

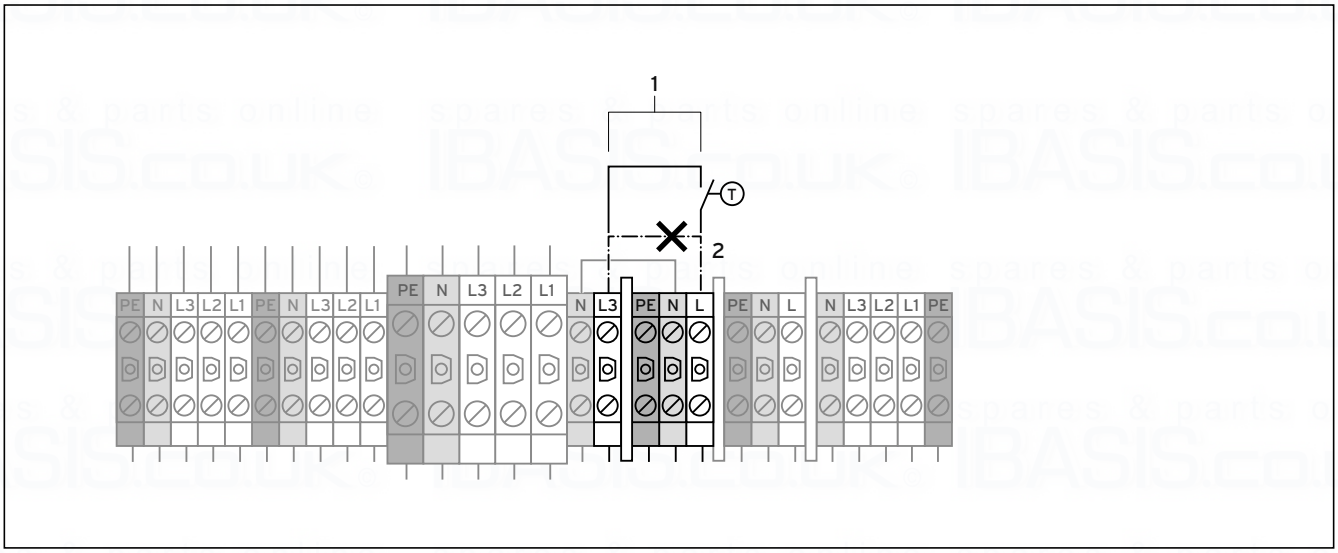

7.13 Connecting limit thermostats VWW

Key

Limit thermostat

A limit thermostat (on-site) can be connected as additional floor protection.
If there is a lock-out due to the limit thermostats, the controller displays the error message 91 (→ **Ch. 11.5**).

- ➤ Remove the bypass pipework (dashed line) (**2**).
- ➤ Connect a limit thermostat to the terminals (**1**).

7.3.7 Connecting a limit thermostat (dual-circuit supply)

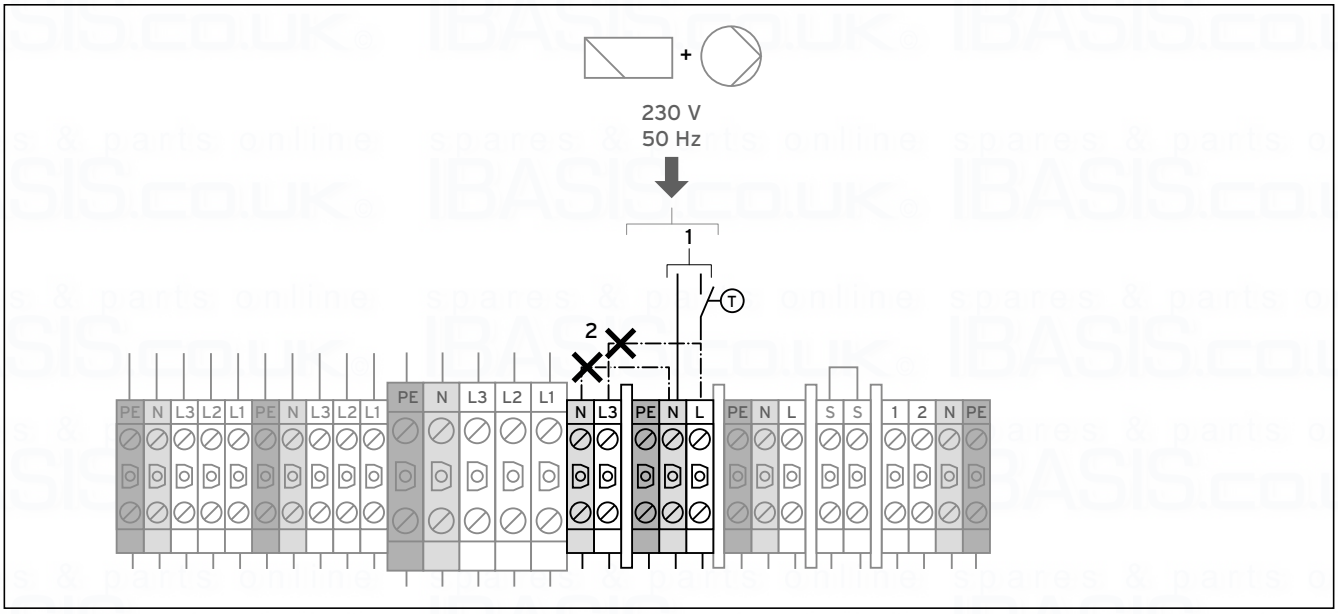

7.14 Connecting limit thermostats VWS

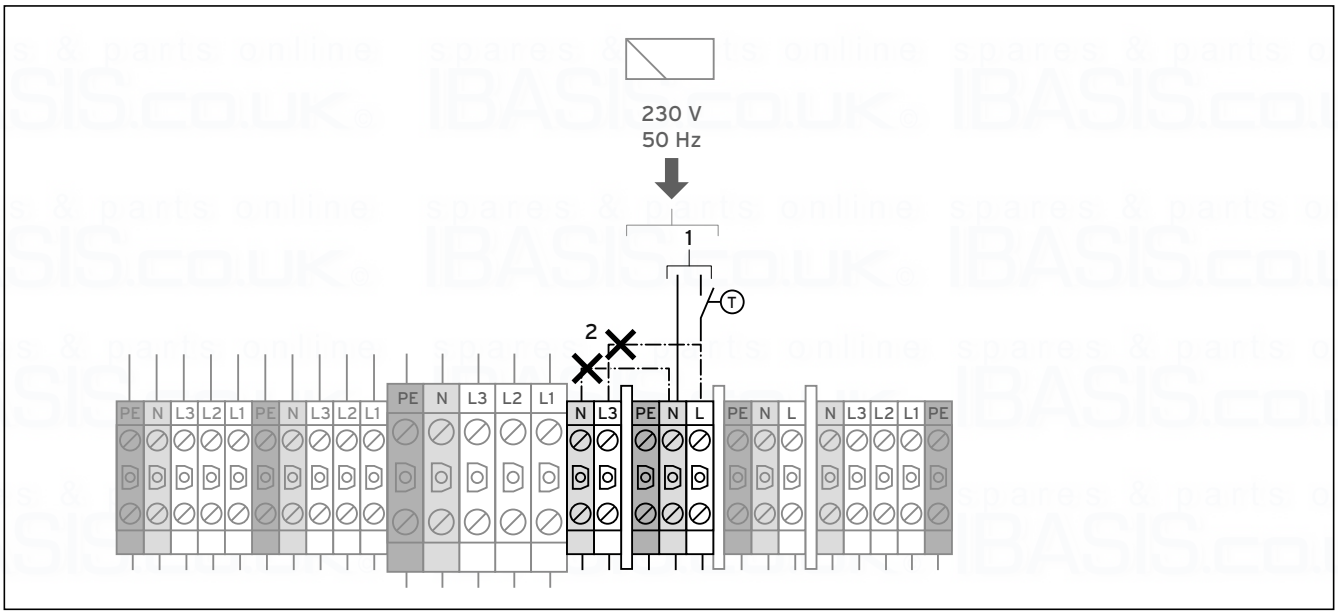

7.15 Connecting limit thermostats VWW

Key

Limit thermostat

A limit thermostat (on-site) can be connected as additional floor protection.
If there is a lock-out due to the limit thermostats, the controller displays the error message 91 (→ **Ch. 11.5**).

- Remove the bypass pipework (dashed lines) (**2**).
- Install a limit thermostat on the standard power supply for the auxiliary consumers in such a way that it interrupts the current-carrying conductor.
- Connect a limit thermostat to the terminals (**1**).

7.3.8 Connecting external brine switch (VWS only)

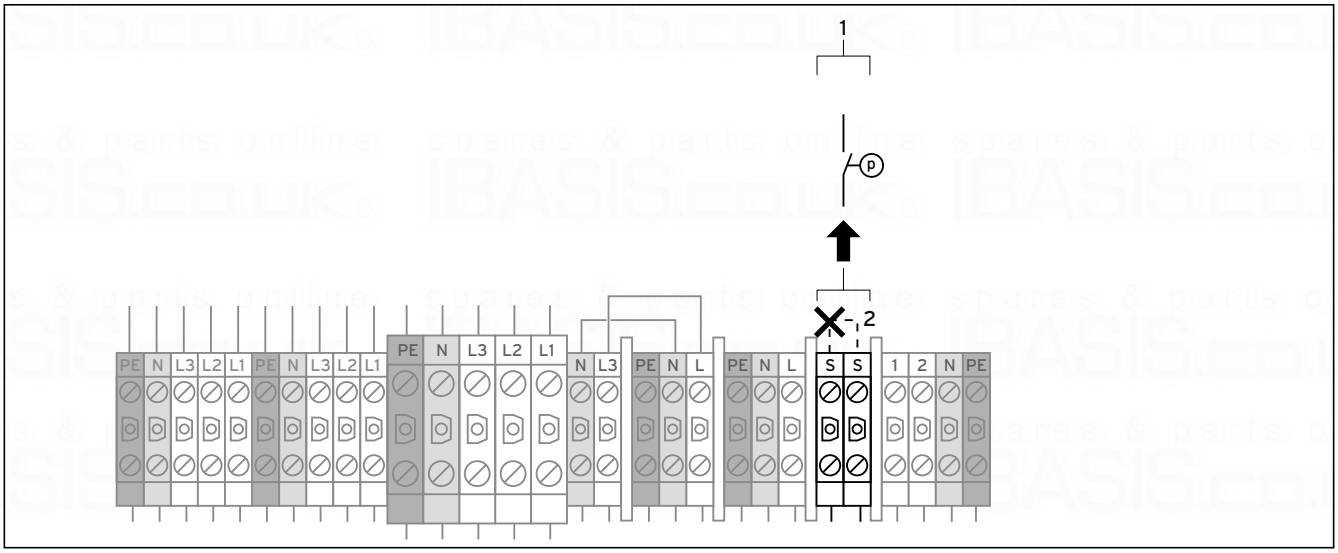

7.16 Connecting an external brine switch (VWS only)

Key

Brine Switch

In some cases (for example, in drinking water protection areas), local authorities prescribe how an external brine switch must be installed (VWS only) and the refrigerant circuit is switched off if the pressure in the brine circuit exceeds a certain level.
If there is a lock-out due to the brine switch, the controller displays the error message 91 (**→ Ch. 11.5**).

- Remove the bypass pipework (dashed line) (**2**).
- Connect an external brine switch to the terminals (**1**).

7.3.9 Connecting an external 3-way brine mixing valve cooling (VWS only, for optional external passive cooling)

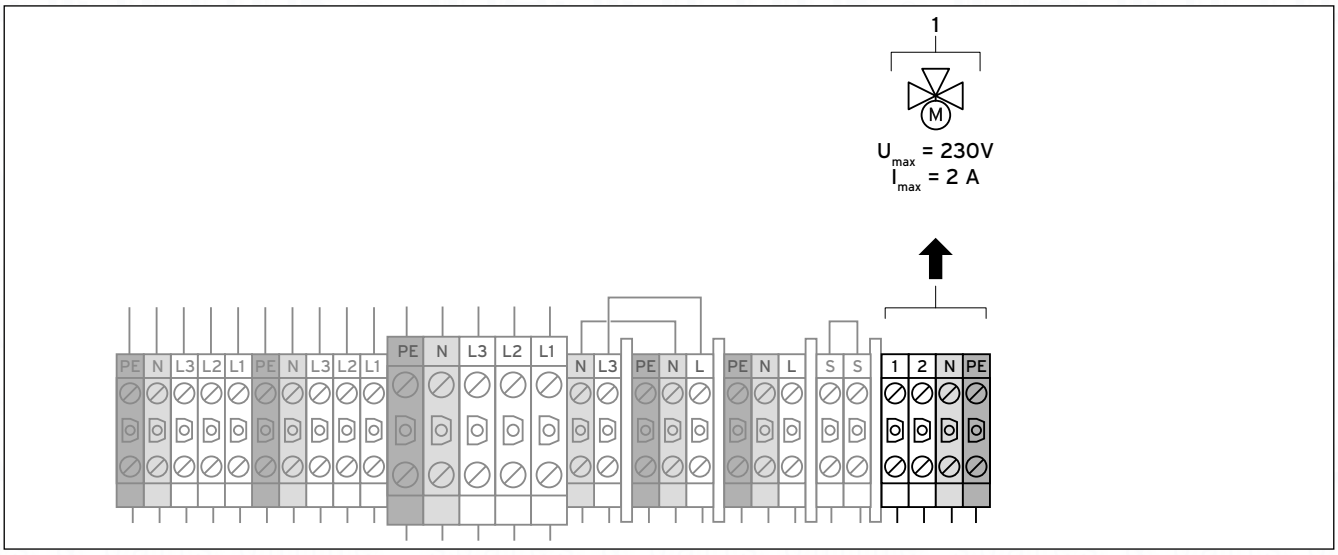

7.17 Connecting an external 3-way brine mixing valve cooling

Key

3-way brine mixing valve

If you install the optional external passive cooling:

➤ Connect the external 3-way brine mixing valve cooling (to be fitted on-site) to the terminals (**1**).

7.4 Controller PCB (overview)

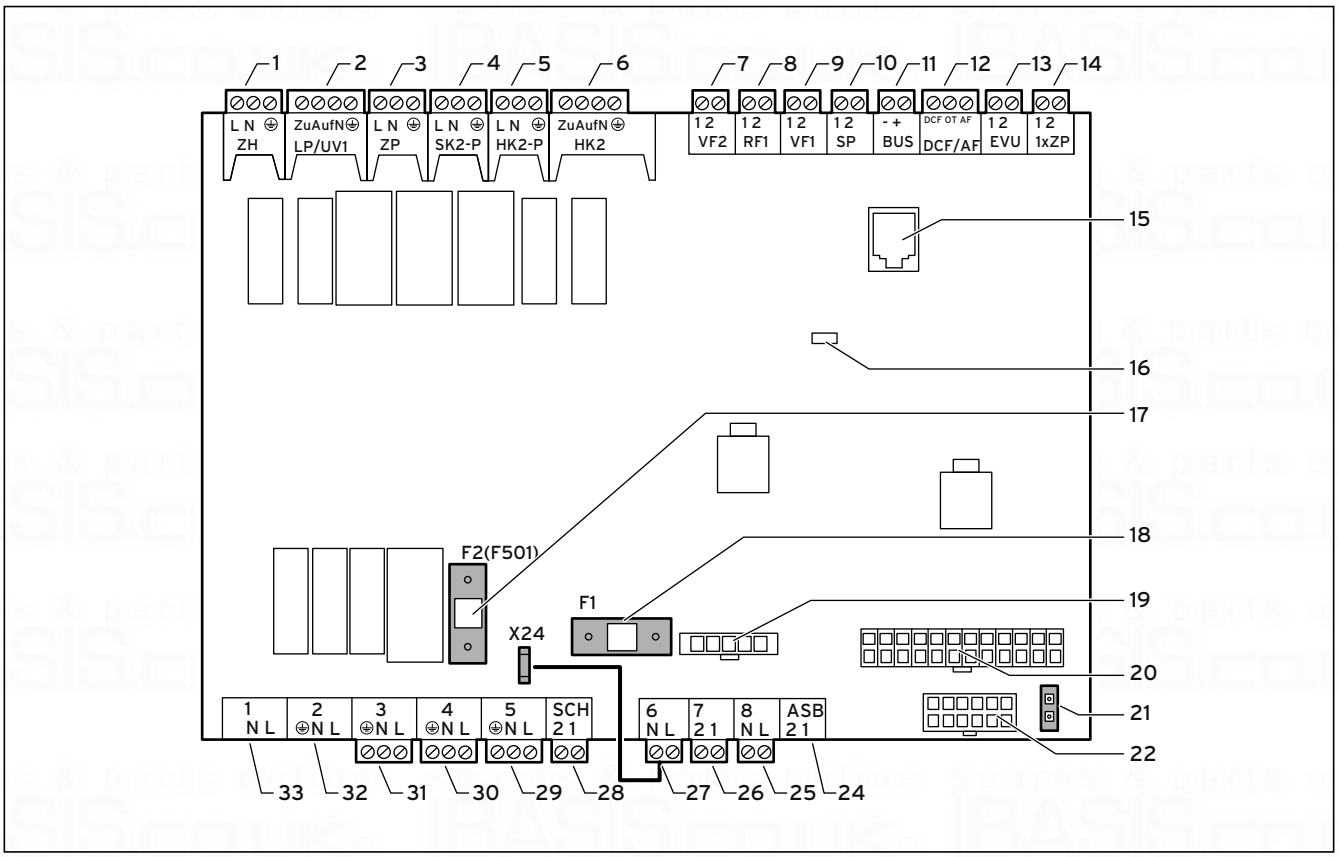

7.18 Controller PCB

Key

Upper connection terminals

1	ZH	External auxiliary heater
2	LP/UV 1	External 3-way diverter valve heating/cylinder charging for DHW loading
3	ZP	DHW circulation pump
4	SK2-P	VWW only: Well pump circuit breaker VWS only, for external passive cooling: Brine circuit pump cooling and heating/cooling diverter valves
5	HK2-P	Second external heating circuit pump
6	HK2	Second external 3-way diverter valve or 3-way brine mixing valve (depending on the hydraulic scheme)
7	VF2	External flow sensor
8	RF1	Return temperature sensor buffer tank
9	VF1	Flow temperature sensor buffer tank
10	SP	DHW tank temperature sensor
11	BUS	eBUS
12	DCF/AF	DCF signal + external sensor
13	Energy supplier	Connection for relay contact of the control system signal receiver from the power company Open: compressor is allowed to operate Closed: compressor operation blocked
14	1xCP	Contact for one-time requirement for the circulation pump, e.g. using an external button

PCB components

15	eBUS/vrDIALOG 810/2
16	Check LED for power supply (lights green if OK)
17	Fuse F2 T 4A/250 V for controller PCB
18	Fuse F1 T 4A/250 V for brine pump
19	Monitoring of compressor phase sequence
20	Multiple connector for temperature sensors
21	eBUS plug controller (signal and voltage supply)
22	Multiple connector for pressure sensors

Lower connection terminals

24	ASB	In-rush current limiter (VWS/VWW 220 and 300 only)
25	8	Compressor circuit breaker
26	7	Internal high-pressure and low-pressure switch (not connected)
27	6	
28	SCH	Accessory for brine switch (VWS only) or flow switch (VWW only) on terminal strip
29	5	Brine pump (VWS only)
30	4	Controller PCB voltage supply
31	3	External heating circuit pump on terminal strip
32	2	Free
33	1	VWS only: Control of 3-way brine mixing valve cooling (on terminal strip)

Caution!
Risk of damage from overload!
The maximum power for all actuators/consumers that are connected to the controller PCB must not exceed 4 A.
➤ Observe the following connection limits: I_{max} = 2 A, U_{max} = 230 V

The controller PCB has a cover plate for protection and this cover plate has openings for the eBUS/vrDIALOG 810/2 connection (**15**) and for the voltage supply LED (**18**).
To replace the fuses (**17**) or (**19**), you must remove the cover plate.

7.5 Installing the supplied accessory

The following must be connected for the sample hydraulic scheme for hydraulic scheme 1 (→ **Fig. 5.2**):
- VRC-DCF receiver with outside temperature sensor
- VF2 flow temperature sensor

The following must be connected for the sample hydraulic scheme for hydraulic scheme 2 (→ **Fig. 5.3**):
- VRC-DCF receiver with outside temperature sensor
- VF2 flow temperature sensor
- VF1 flow temperature sensor buffer tank
- RF1 Return temperature sensor buffer tank

The following must be connected for the sample hydraulic scheme for hydraulic scheme 3 (→ **Fig. 5.4**):
- VRC-DCF receiver with outside temperature sensor
- VF2 flow temperature sensor
- DHW tank sensor SP

The following must be connected for the sample hydraulic scheme for hydraulic scheme 4 (→ **Fig. 5.5**):
- VRC-DCF receiver with outside temperature sensor
- VF2 flow temperature sensor
- DHW tank sensor SP
- VF1 flow temperature sensor buffer tank
- RF1 Return temperature sensor buffer tank

The following must be connected for the sample hydraulic scheme for hydraulic scheme 10 (→ **Fig. 5.6**):
- VRC-DCF receiver with outside temperature sensor
- VF2 flow temperature sensor
- DHW tank sensor SP
- VF1 flow temperature sensor buffer tank
- RF1 Return temperature sensor buffer tank

7.5.1 Installing the VR 10

The VR 10 standard sensor is designed in such a way that it can be fitted in three different positions, depending on your requirements:
- as an immersion sensor, e. g. as a tank sensor to a tank sensor pocket.
- as a flow sensor in a hydraulic switch.
- as a clamp-on sensor on the heating pipe in the supply or return.

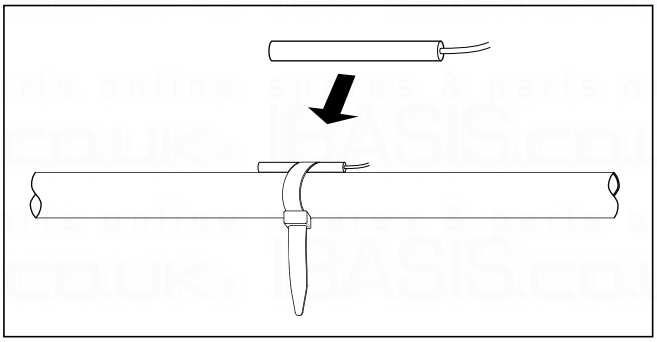

7.19 Installing the VR 10 standard sensor as a clamp-on sensor

You can use the enclosed strap to secure the sensor as a clamp-on sensor to the heating pipe in the supply or return. We recommend that the pipe together with the sensor be insulated
to ensure optimum temperature measurement.
➤ Install the VR 10 standard sensor(s) in accordance with the requirements of the hydraulic scheme and connect it to the respective terminals on the controller PCB (→ **Fig. 7.18**).

The controller automatically recognises the supplied sensor. VR 10 sensors do not have to be registered or configured.

7.5.2 Installing the VRC DCF

The supplied VRC DC receiver must always be installed, even if another DCF receiver is already installed. This cannot be used for the heat pump. This also applies for systems that have a fixed value configuration and systems that have the VRC 620/630 bus modular control system.

Caution!
Risk of malfunction!
If the supplied VRC DCF receiver with external sensor has not been installed, the operating panel display shows a temperature of -60 °C. It is not possible to correctly control the flow temperature and the external electric auxiliary heating. No warning message is recorded in the Error History.
➤ Install the supplied VRC DCF receiver with external sensor.

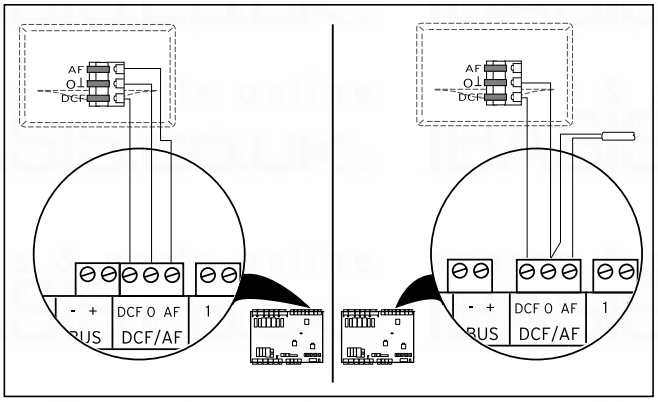

7.20 Connecting the VRC DCF receiver

- ➤ Fit the VRC DCF receiver in accordance with its enclosed installation manual.
- ➤ Wire the VRC DCF receiver accordingly (➞ **Fig. 7.20**):
  - Left: enclosed VRC DCF receiver with integrated outdoor sensor
  - Right: special solution with outdoor sensor (optional accessory)

A special solution with outdoor sensor VRC 693 is required if, for example, radio reception is only transmitted at an installation location that is exposed to sun (➞ **operating and installation instructions VRC 693)**.

7.6 Installing accessories that are absolutely necessary

Hydraulic Schemes 1 and 3

For Hydraulic Schemes 1 and 3, the following additional accessories must be connected as required components that are not included in the scope of delivery:

- A limit thermostat
- An external heating circuit pump
- Hydraulic Scheme 3 only: An external heating/cylinder charging diverter valve
- VWW only: A well pump

- ➤ Fit a limit thermostat (**19**) (➞ **Fig. 5.2** and ➞ **Fig. 5.4**).
- ➤ Depending on the mains supply, connect the limit thermostat as described in(➞ **Ch. 7.3.6** or ➞ **Ch. 7.3.7**).
- ➤ Fit an external heating circuit pump in the supply.
- ➤ Connect the external heating circuit pump as described in (➞ **Ch. 7.3.3**).

Additional information for Hydraulic Scheme 3:

- ➤ Fit an external heating/cylinder charging diverter valve.
- ➤ Connect an external heating/cylinder charging diverter valve to terminal LP/UV1 (**2**) (➞ **Fig. 7.18**).

VWW only:

- ➤ Fit an external well pump.
- ➤ Connect the well pump as described in (➞ **Ch. 7.3.4**).

Hydraulic Schemes 2 and 4

For Hydraulic Schemes 2 and 4, the following additional accessories must be connected as required components that are not included in the scope of delivery:

- A limit thermostat
- An external heating circuit pump
- A second external heating circuit pump
- An external, motor-controlled 3-way mixing valve
- Hydraulic Scheme 4 only: An external heating/cylinder charging diverter valve

- ➤ Fit a limit thermostat (**19**) (➞ **Fig. 5.3** and ➞ **Fig. 5.5**).
- ➤ Depending on the mains supply, connect the limit thermostat as described in (➞ **Ch. 7.3.6** or **7.3.7**).
- ➤ Fit an external heating circuit pump in the buffer circuit.
- ➤ Connect the external heating circuit pump as described in (➞ **Ch. 7.3.3**).
- ➤ Fit a second external heating circuit pump in the heating circuit.
- ➤ Connect a second external heating circuit pump to terminal HK2-P (**5**) (➞ **Fig. 7.18**).
- ➤ Fit an external, motor-controlled 3-way brine mixing valve
- ➤ Connect the external motor-controlled 3-way brine mixing valve to terminal HK2 (**6**) (➞ **Fig. 7.18**).

Additional information for Hydraulic Scheme 4:

- ➤ Fit an external heating/cylinder charging diverter valve.
- ➤ Connect an external heating/cylinder charging diverter valve to terminal LP/UV1 (**2**) (➞ **Fig. 7.18**).

VWW only:

- ➤ Fit an external well pump.
- ➤ Connect the well pump as described in (➞ **Ch. 7.3.4**).

Hydraulic Scheme 10:

For Hydraulic Scheme 10, the following additional accessories must be connected as required components that are not included in the scope of delivery:

- A limit thermostat
- An external heating circuit pump
- A second external heating circuit pump
- An external, motor-controlled 3-way mixing valve
- An external heating/cylinder charging diverter valve
- Two external heating/cooling diverter valves
- A second external brine circuit pump cooling
- An external 3-way brine mixing valve cooling

- ➤ Fit a limit thermostat (**19**)(➞ **Fig. 5.6**).
- ➤ Depending on the mains supply, connect the limit thermostat as described in (➞ **Ch. 7.3.6** or **7.3.7**).
- ➤ Fit an external heating circuit pump in the buffer circuit.
- ➤ Connect the external heating circuit pump as described in(➞ **Ch. 7.3.3**).
- ➤ Fit a second external heating circuit pump in the heating circuit.
- ➤ Connect a second external heating circuit pump to terminal HK2-P (**5**) (➞ **Fig. 7.18**).

- Fit an external, motor-controlled 3-way brine mixing valve
- Connect the external motor-controlled 3-way brine mixing valve to terminal HK2 (**6**) (→ **Fig. 7.18**).
- Fit an external heating/cylinder charging diverter valve.
- Connect an external heating/cylinder charging diverter valve to terminal LP/UV1 (**2**) (→ **Fig. 7.18**) an.
- Fit two external heating/cooling diverter valves and a second external brine circuit pump cooling in the brine circuit.
- Connect the two external heating/cooling diverter valves and the second external brine circuit pump cooling to terminal SK2-P (**4**) (→ **Fig. 7.18**) an.
- Fit an external 3-way brine mixing valve cooling.
- Connect the external 3-way brine mixing valve cooling as described in (→ **Ch. 7.3.9**).

Also refer to the sample hydraulic schemes (→ **Fig. 5.2** to → **Fig. 5.6**).

7.7 Installing optional accessories

Danger!
Risk of electric shock!
- Switch of the electricity supply before you connect additional equipment to the controller PCB via the eBUS.
- Check that there is no voltage.

You can connect the following optional accessories:
- Up to six VR 60 mixer modules to add twelve system circuits to the heating installation (factory set by default as mixed circuits).
- Up to six VR 90 remote control units to control the first six heating circuits.
- vrnetDIALOG 840/2 or 860/2
- Each connection is connected in parallel to an eBUS terminal (**11**) (→ **Fig. 7.18**).

7.7.1 Installing VR 90

If you install several heating circuits, you can connect a separate VR 90 remote control unit for each of the first six heating circuits. It allows the operation mode and target room temperature to be set and, if required, it uses the installed room temperature sensor to take the room temperature into consideration. In addition, the "switch-on room temp." must be set in the controller for the heat pump (**menu C5**) (→ **Tab. 9.6**) or in the VR 90.
In each case, you can set the parameters for the relevant heating circuit (time programme, heating curve, etc.) and select special functions (Party etc.).
In addition, it is possible to query the heating circuit and to display service and fault messages.

To fit the VR 90 remote control unit, see its enclosed → **installation instructions**.
The VR 90 remote control units communicate with the heating controller via the eBus. You can connect them to any interface in the system. You need only to ensure that the eBUS interface is connected to the heat pump controller.

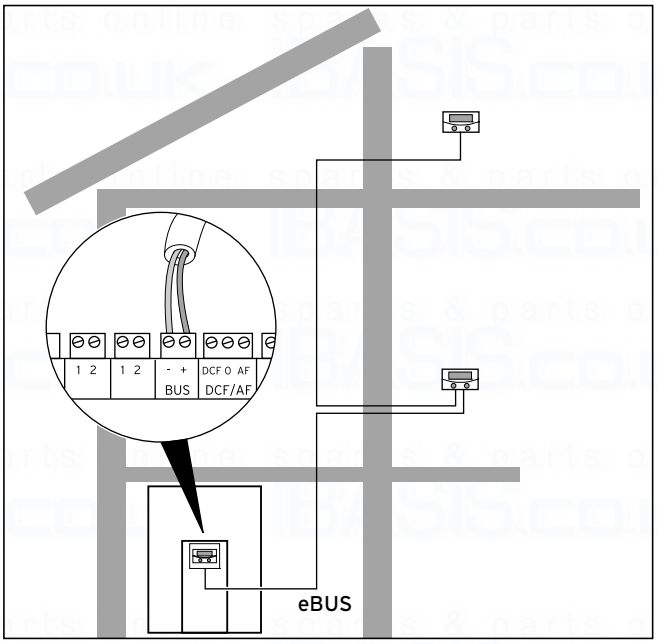

7.21 Installing remote control units

The structure of the Vaillant system allows you to lay the eBus from component to component (→ **Fig. 7.21**. Switching the lines therefore does not impair communication.

All eBus connector plugs are designed to allow you to wire at least 2 x 0.75 mm^2 for each connection lead.
The use of cable with a cross-section of 2 x 0.75 mm^2 is therefore recommended for eBUS cables.

Setting the bus address
To ensure that no problems can occur in the communication between all components, each remote control unit must receive an addressing that corresponds to the controlling heating circuit.

- On the first VR 90 remote control unit, set the bus address to "2" for heating circuit 2 (integrated into the geoTHERM heat pump).
- For any other remote control units, set bus different addresses that also differ from this and whose numbers correspond to the heating circuit, e. g. bus address 5 for heating circuit 5 (the addresses 0, 1 and 3 are assigned internally and are not available). Take note of the VR 90 installation manual.

7.7.2 Installing VR 60

With the VR 60 mixer module, you can add two mixed circuits to the control system of the heating installation. You can connect a maximum of six mixer modules.
A unique bus address is set on the mixer module by means of a rotary switch. You can use the operating panel to set the heating programmes and all of the required parameters.
All heating circuit connections (sensors, pumps) are made directly to the mixer module with ProE plugs.
For assembly of the VR 60 mixer module, see its enclosed installation instructions.

Like the VR 90 remote control units, the VR 60 mixer modules also communicate with the heating controller via the eBUS.

➤ During the installation, you must follow the same procedure that is used to connect remote control units (**→ Ch. 7.7.1**).

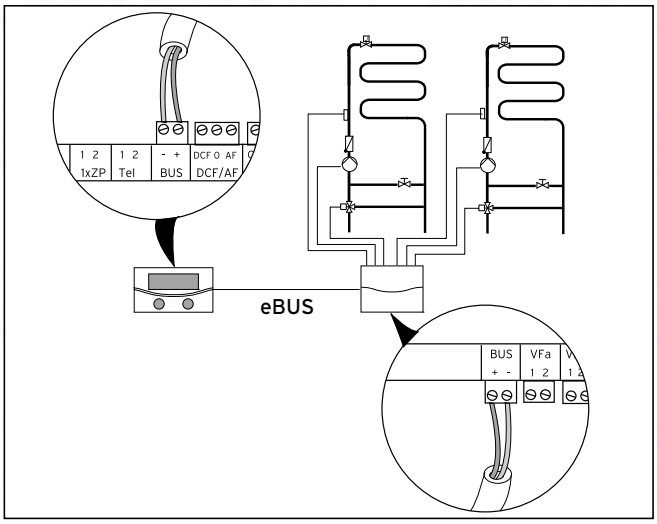

7.22 Installing further mixed circuits with VR 60

➤ Information about the system design can be found in (**→ Fig. 7.22**). Observe the **→ installation manual** for the mixer module.

7.8 Connecting an external boiler

You can use an existing external boiler as an auxiliary heater.
You can use the VR 32 accessory to connect boilers with Vaillant eBUS interfaces to the eBUS of the heat pump (**→ VR 32 installation instructions**).
Boilers without eBUS interfaces are connected using a cut-off relay (accessory) and the auxiliary heater contact (**1**) (**→ Fig. 7.18**).

When connecting an external boiler, it is not possible to have any legionella protection in the DHW tank.

7.8.1 Connecting an external boiler with eBUS interface

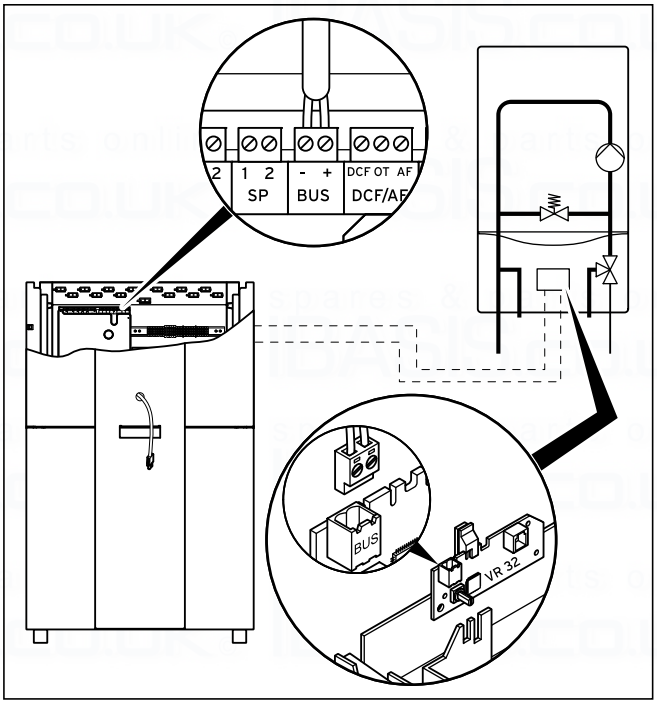

7.23 Connecting a boiler with eBUS interface

➤ In the external boiler, install the bus coupler VR 32 (**→ VR 32 installation instructions**).
➤ Set the eBUS address switch of the VR 32 to 2.
➤ Connect the eBUS cable of the VR 32 bus coupler to the eBUS interface on the controller PCB of the heat pump (**11**) (**→ Fig. 7.18**).
➤ After starting up the unit, set the hydraulic integration of the external boiler as an auxiliary heater (**menu A3**) (**→ Tab. 9.9**).

The heat pump switches in the external boiler, depending on the heat requirement and controller setting.

The emergency frost protection function for the heat pump and a DHW tank remain.

7.8.2 Connecting an external boiler without eBUS interface

Caution!
Risk of damage due to freezing.
If the value "DHW+CH", "Hot water" or "CH" is set in menu A3 (→ **Tab. 9.9**) "hydraulic integration of the auxiliary heater" for the auxiliary heater, in accordance with the hydraulic scheme, emergency frost protection is only available for the set component(s) and not for the heat pump and a DHW tank.

- If there is a risk of frost in the heat pump's installation space when it is switched off for a prolonged period due to a fault, you must ensure that it is protected against frost.

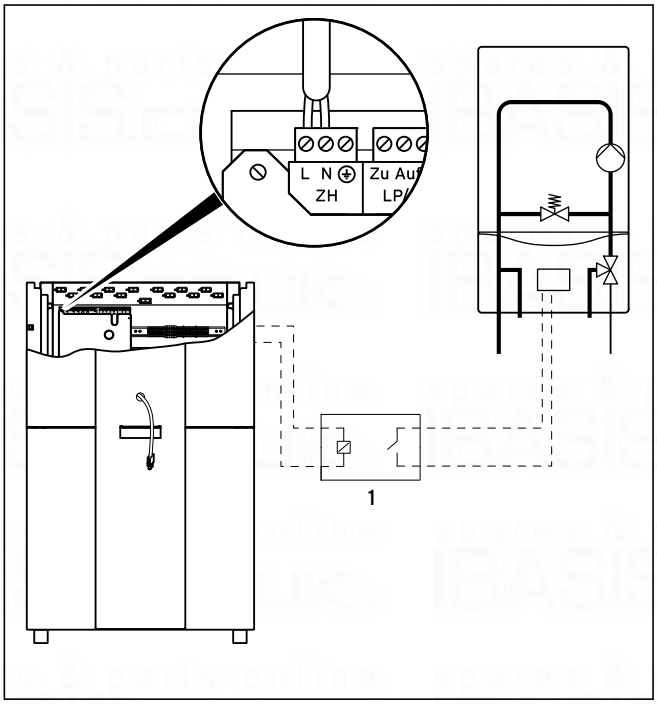

7.24 Connecting a boiler without eBUS interface

- Install a cut-off relay (**1**) (accessory) for the boiler.
- Remove the connection cable from terminal ZH on the controller PCB (**1**) (→ **Fig. 7.18**).
- Connect the cable from the cut-off relay to this terminal.
- After starting up the unit, set the hydraulic integration of the external boiler as an auxiliary heater (**menu A3**) (→ **Tab. 9.9**).

The heat pump switches in the external boiler, depending on the heat requirement and controller setting.

7.9 Fitting the cladding and the operating panel

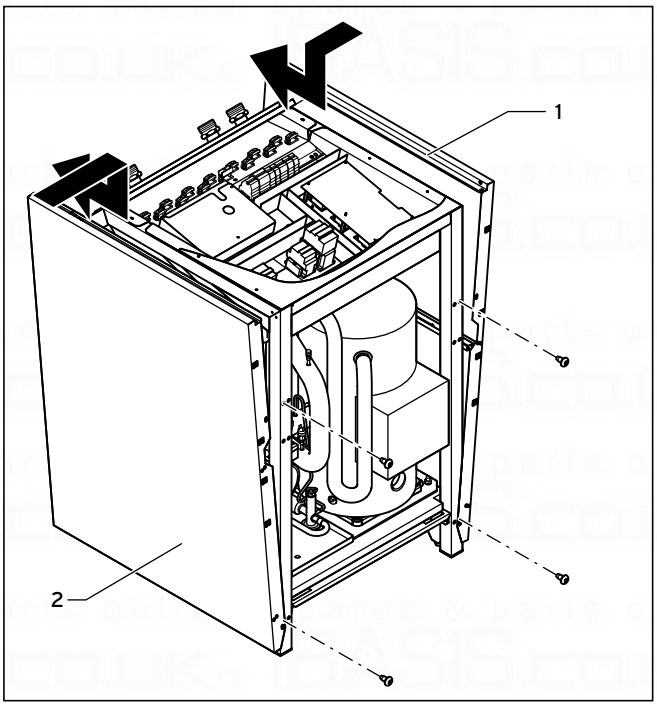

7.25 Fitting the side cladding

- Place the lower end of both side cladding parts into the guide slots on the heat pump and then slide the cladding backwards.
- Use two flat-head screws to secure each of the cladding parts.

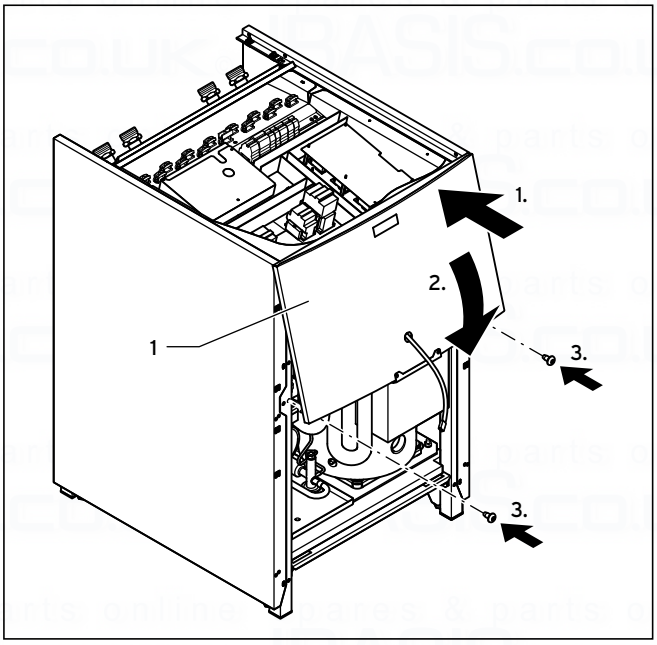

7.26 Fitting the upper part of the front cladding

- Guide the eBUS line for the operating panel and, if you are using the vrnetDIALOG accessory, the 230 V voltage

supply line through the opening in the upper part of the front cladding (**1**).

Caution!
Risk of short-circuit caused by a free voltage supply cable.
If you do not use the vrnetDIALOG accessory or voltage is not supplied to the vrnetDIALOG via the heat pump, the free connector -vrnetDIALOG (230 V voltage supply) may cause short circuits within the heat pump.
- ➤ Leave the connection cable -vrnetDIALOG (230 voltage supply) in the fastening of the heat pump.

- ➤ Hook the upper part of the front cladding onto the frame and push it into the clip holder.
- ➤ Use two screws to secure the upper part of the front cladding.

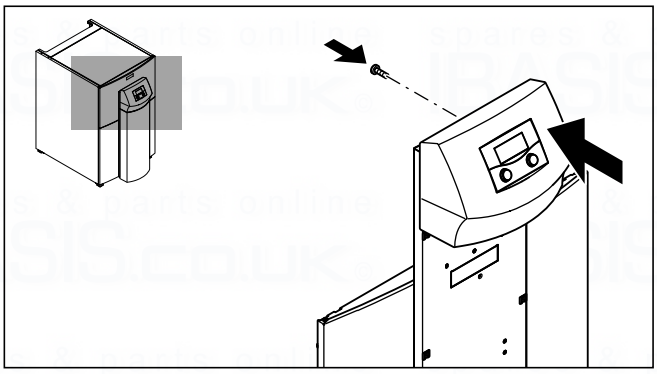

7.27 Fitting the operating panel

- ➤ Push the operating panel into the clip holder on the mounting plate and then screw in the operating panel from the rear.

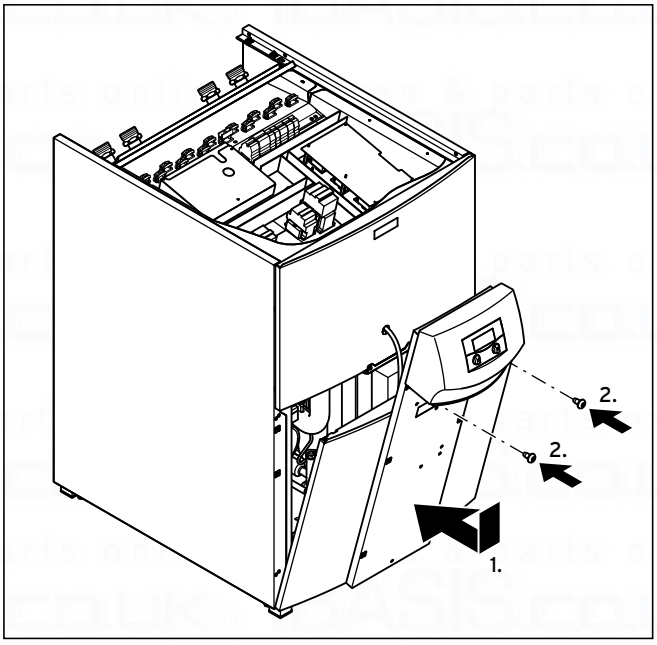

7.28 Fitting the lower part of the front cladding

- ➤ Place the lower part of the front cladding on the frame of the heat pump.
- ➤ Guide the eBUS line for the operating panel and, if you are using the vrnetDIALOG accessory, the 230 V voltage supply line through the opening in the mounting plate of the operating panel.
- ➤ Then push the cladding into the clip holder on the side cladding.
- ➤ Tightly screw on the mounting plate for the operating panel as you did with the two screws for the upper part of the front cladding.
- ➤ If you want to fit the vrnetDIALOG accessory, you must first carry out the assembly steps in (→ **Ch. 7.10**) before continuing to fit the cladding.

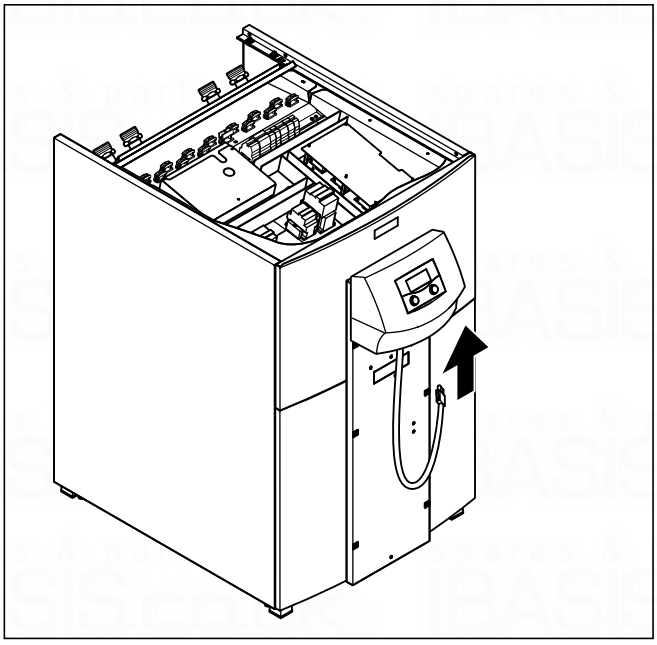

7.29 Connecting the eBUS line for the operating panel

➤ If you are not using the vrnetDIALOG accessory, connect the supply line to the operating panel..

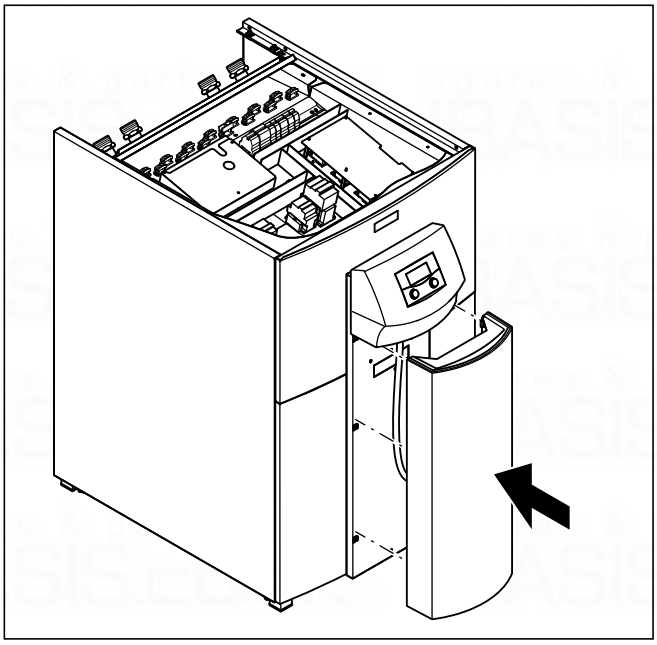

7.30 Fitting the cover column for the operating panel

➤ Push the cover column for the operating panel into the clip holder on the mounting plate for the operating panel.

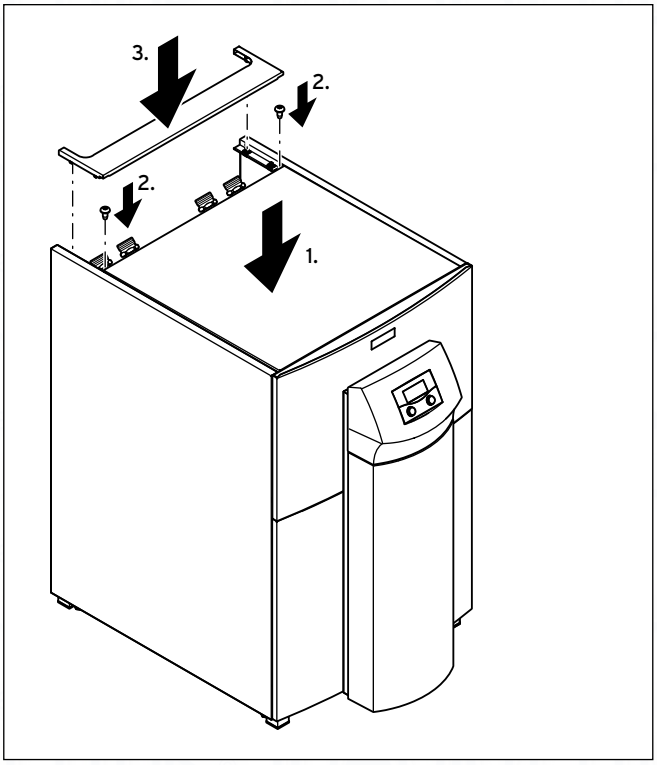

7.31 Installing the upper cladding section

➤ Place the front upper cladding on the heat pump and use two screws to secure this.
➤ Push the rear upper cladding for the pipe feed into the clip holder.

7.10 Installing vrnetDIALOG 840/2 and 860/2

The communication unit vrnetDIALOG 840/2 and 860/2 (accessory) is secured to the mounting plate below the operating panel and is connected to the controller PCB.

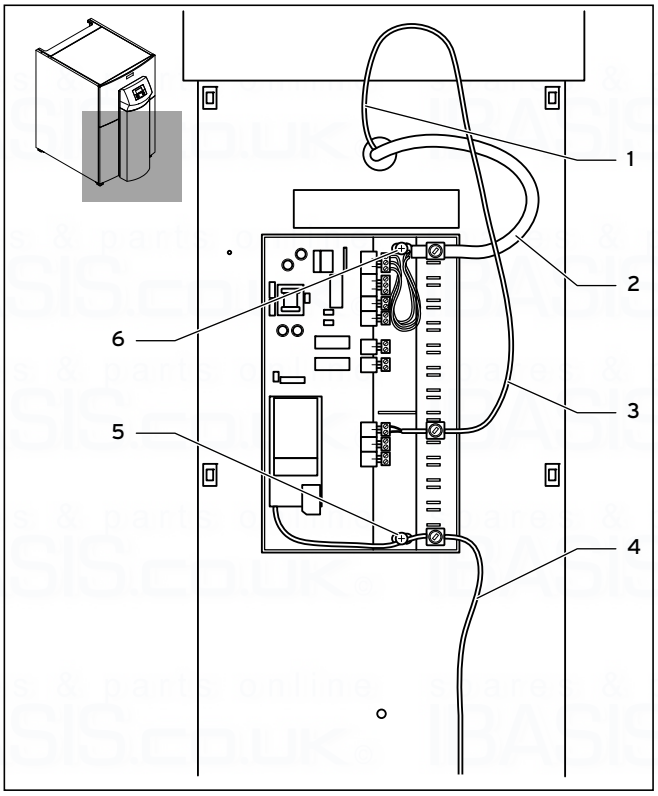

7.32 Installing vrnetDIALOG

- Remove the cover from the casing on the vrnetDIALOG by pulling the hinge tabs from the terminals on the casing.
- Secure the vrnetDIALOG casing on the mounting plate of the operating panel. Use the tapping screws (**5**) and (**6**) from the equipment pack to do this. To secure this, see the vrnetDIALOG installation manual.
- Connect the 230 V voltage supply line (**2**) to vrnetDIALOG (three-pole ProE plug).
- Connect the eBUS line (**1**) of the operating panel to the adapter cable for vrnetDIALOG (**3**) from the fittings pack.
- Plug the plug for one of the lines of the Y cable into the eBUS socket on the operating panel and plug the plug for the other line into the eBUS socket on the vrnetDIALOG.

Any other eBus lines that may already be available on the vrnetDIALOG are not required and can be removed.

- Connect the antenna cable or telephone cable (**4**) to the vrnetDIALOG (see (→ **vrnetDIALOG installation manual**). These cables must not be fed through the heat pump.
- Guide all of the cables through the openings on the casing that you have created for this purpose.
- Reattach the vrnetDIALOG cover to the casing by moving the hinge tabs for the cover into the terminals on the casing and close the cover.

8 Start-up

Danger!
Risk of injury due to hot and cold components.
The heat pump may only be put into operation after all the cladding sections have been fitted.
➤ Before starting up the unit, fit all of the cladding parts.

➤ Fill out the start-up log **before** starting up the unit (➞ **Ch. 15**).

The heat pump may only be started if all the points noted there have been satisfied.

For the subsequent start-up, it is assumed that you know how to operate the controller as described in the operating instructions.

Danger!
Risk of electric shock!
➤ You must first fit all of the cladding parts for the inner and outer unit before switching on the voltage supply.

8.1 Carrying out the initial commissioning

As soon as the heat pump is supplied with power for the first start-up, an internal self-test starts automatically and, during this test, the heat pump tests itself and its connected components to ensure that they work properly. In doing so, the configuration of the sensors is checked, the phase sequence of the 400 V voltage supply (phase sequence) is checked and the sensors that are used are checked to ensure that they work properly.

➤ Switch on the circuit breaker so that the heat pump is supplied with power.

If the self-test is not successful, a fault message is shown in the controller display (➞ **Ch. 11**).

The controller automatically checks the correct phase sequence.
➤ If a fault message is displayed, swap two of the phases with each other.

The heat pump starts and the software in the controller initialises:

Vaillant
Loading...

8.1 Controller initialises

After a short time the controller is ready for operation and detects that this is an initial commissioning. During the initial operation, the controller always starts with the Installation Assistant menu.
You can change all of the entries in the controller settings at a later point.

You must also run the Installation Assistant after resetting to factory settings.

Installationsassistent	A1
Sprache	>DE deutsch
Standort	DE
>Sprache wählen	

8.2 Menu A1: Language selection

The illustration shows a German interface.
➤ If required, change the language setting.
➤ Turn the ⊟ dial until you reach the next menu.

Installation Assistant	A2
Hydraulic scheme	0
Electric Wiring Diagram	0
Accept change	NO
>Select	

8.3 Menu A2: Select a hydraulic scheme and electric wiring diagram

8.1.1 Selecting a hydraulic scheme

Caution!
Malfunctions may be caused by using the wrong hydraulic scheme.
A hydraulic scheme that is not suitable for the heating installation causes malfunctions.
➤ Select the correct hydraulic scheme.

➤ Turn the dial until the cursor > points to the hydraulic scheme number.
➤ Press the dial . The parameter is shown with a dark background and is activated.
➤ Turn the dial until you have selected the hydraulic scheme that corresponds to your heating installation (➞ **Tab. 8.1**).
The sample hydraulic schemes for your heating installation can be found in (➞ **Ch. 5.1**) to ➞ **Ch. 5.5**).
➤ Press the dial to confirm your selection.

Sample hydraulic scheme Fig. No.	Hydraulic scheme no.	Buffer tank	Heating circuit	DHW tank	VR 60 connection	Sensors
5.2	1		X		prohibited	AF, VF2
5.3	2	X	X		possible	AF, VF1, VF2, RF1
5.4	3		X	X	prohibited	AF, SP, VF2
5.5	4	X	X	X	possible	AF, SP, VF1, VF2, RF1
5.6	10	X	X	X	required	AF, SP, VF1, VF2, RF1

8.1 Selecting the hydraulic scheme no.

8.1.2 Selecting the electric wiring diagram

➤ Turn the dial until the cursor **>** points to the electric wiring diagram number.
➤ Press the dial . The parameter is shown with a dark background and is activated.
➤ Turn the dial until you have selected the electric wiring diagram that corresponds to your electricity supply "1" or "2" (➞ **Ch. 7.3**):
1 = Unblocked mains supply
2 = Duel-circuit supply heat pump rate
➤ Press the dial to confirm your selection.

8.1.3 Implementing the settings

➤ Turn the dial until the cursor **>** on the right-hand side of the menu entry "Accept change" points to **NO**.
➤ Press the dial . The parameter is shown with a dark background and is activated.
➤ Turn the dial until "**YES**" appears.
➤ Press the dial to confirm your selection.

➤ Work through all of the other menu options in the Installation Assistant until the end and make all of the settings that you require.

End of Installation Assistant	
Install. completed?	>NO
>Adjustable values	

8.4 Menu: Ending the installation

➤ Only set "Install. completed?" to "**YES**" if you are sure that everything has been set correctly.

If you confirm "**YES**", the controller switches to the basic display. The heat pump starts under its autonomous control system.

8.1.4 Checking and bleeding the brine circuit (VWS only)

The brine circuit must be bled over the intended period of 24 hours.
➤ Do not decrease this amount of time by cancelling the operation, because this will mean that air remains in the brine circuit and you will have to repeat the operation.

Tool	A7
Venting prog	OFF

8.5 Menu A7: Starting the system venting programme

➤ In menu A7 (➞ **Ch. 9.7.4**), select the option "Venting prog" and set it to "ON".

While the bleeding function is active, the brine pump switches between operating for 50 minutes and being idle for 10 minutes.

- Check that the fluid level in the brine expansion tank has stabilised - in other words, that there are no longer any significant fluctuations.
- Allow the brine pump to continue running so that the air that is contained in the brine circuit can be captured in the brine expansion tank. When the air escapes, the liquid level in the brine expansion tank falls and must be filled up again (→ **Ch. 6.3**).
- Open the expansion relief valve on the brine expansion tank (**42a**) (→ **Fig. 5.9**), in order to allow any overpressure to escape if it is above the required fill pressure of 200 kPa (2,0 bar) and below the expansion relief valve's operating pressure of 300 kPa (3 bar) . The brine expansion tank must be 2/3 full of fluid.

Check the filling level of the brine fluid
In the first month after commissioning the heating installation, the filling level for the brine fluid may fall slightly and this is completely normal. Although the filling level can also vary depending on the temperature of the heat source, However, it must never sink so far that it is no longer visible in the expansion tank.
The filling level is correct when the brine expansion tank is 2/3 full.

- Refill the brine fluid if the filling level falls so low that it can hardly be seen in the brine expansion tank.

8.1.5 Checking and bleeding the heating circuit

If you have to manually operate the heating circuit pump and all of the diverter valves to bleed the heating circuit, use the menu A5/A6 to do this (→ **Ch. 9.7.4**).

8.1.6 Bleeding the DHW tank, if required

If an external DHW tank is connected:
- Open all domestic hot water draw-off points in the building.
- Close all draw-off points as soon as hot water escapes.

8.2 Handing the heating installation over to the operator

- Instruct the operator of the heating installation on how to handle and work all of the units.
- Pass all of the manuals and documentation for the unit to the operator to be stored.
- Make the operator aware that the manuals must be kept in the vicinity of the heat pump. Point out to the operator that the heating installation must be inspected at regular intervals.

Caution!
Risk of damage caused by deactivating components for frost protection
- Inform the operator about the prerequisites for emergency operation and the automatic frost protection function.

Some operators generally want any optional electric auxiliary heater to be completely shut down.
In menu C7 (→ **Tab. 9.6**), if "Auxiliary heater" is set for "Aux on during CH" and "Domestic hot water mode" is set for "No CH", the emergency operation is not supported. However, the frost protection function can still be used (activates itself automatically).
If, in menu A3 (→ **Tab. 9.9**), "hydraulic integration of the auxiliary heater" is set to "none", neither the emergency operation nor the frost protection function can be used.
At the factory, by setting "None" in menu A3, no external electric auxiliary heater is included.

9 Adapting the appliance to the heating system

To operate the heat pump economically, it is important to match the control system to the customer's heating system and to the pattern of use.
In the following chapter, all the functions of the weather-controlled energy balance controller will be explained.

9.1 Operating modes and functions

Five operation modes are available for each heating circuit:
- **Auto:** The operation of the heating circuit alternates between the "Heating" and "Energy sav" operation modes according to a settable time programme.
- **Eco:** The operation of the heating circuit alternates between the "Heating" and "Off" operation modes according to a settable time programme. The heating circuit is switched off in the energy saving period, provided the frost protection function (depending on the outside temperature) is not enabled.
- **Energy sav:** The heating circuit operates at the set-back temperature regardless of any settable timer programme.
- **Heating:** The heating circuit is operated at the flow target value independently of any settable timer programme.
- **Off:** The heating circuit does not operate, provided the frost protection function (depending on the outside temperature) is not enabled.

Three operation modes are available for connected domestic hot water cylinders:
- **Auto:** Cylinder charging or enablement for the circulation pump is released according to a settable time programme.
- **On:** Cylinder charging is permanently enabled, i.e. the cylinder is immediately reheated as required. The circulation pump is permanently in operation.
- **Off:** The cylinder is not heated. The circulation pump is not operating. The cylinder is reheated to 15 °C for frost protection reasons only when the cylinder temperature falls below 10 °C.

9.2 Automatic functions

Frost protection functions
The heat pump is equipped with two frost protection functions. A frost protection requirement is provided by the compressor (regulated frost protection for unit, heating circuit and domestic hot water cylinder), provided that the heat pump has not been permanently switched off because of a fault. If the heat pump is permanently switched off because of a fault, the set auxiliary heater starts up even if it has not been enabled for normal heating and hot water handling (Emergency frost protection according to the setting for unit, heating circuit and/or domestic hot water cylinder) (**Menu C7**) (**→ Tab. 9.6**).

Regulated frost protection for heating
This function ensures that your heating installation is protected from frost in all operating modes.
If the outside temperature falls below 3 °C and at that time no time window of a time programme is active (i.e. with operation mode "Off" or with "Eco"outside a time window), a start-up temperature requirement with the energy saving target value for room temperature is generated with a default delay of one hour after the condition has occurred.
The frost protection requirement is cancelled when the outside temperature again rises above 4 °C.

Regulated frost protection for domestic hot water cylinder
This function is also active in the operating modes "Off" and "Auto", regardless of time programmes.
This function starts automatically if the cylinder actual temperature of a connected domestic hot water cylinder falls below 10 °C. The cylinder is then heated to 15 °C.

Emergency frost protection function
The emergency frost protection function automatically activates the set auxiliary heater according to the setting for the central heating and/or hot water handling.
If the heat pump is permanently switched off as a result of a fault and the outside temperature is below 3 °C, the auxiliary heater is enabled without time delay for the emergency frost protection mode, provided that the operating mode "Auto" or "Heating" has been set. The flow temperature target value is limited to 10 °C in order not to waste too much energy unnecessarily during emergency operation with the auxiliary heater. Enablement is cancelled when the outside temperature rises above 4 °C.
If a buffer tank is connected, it is heated when the temperature sensor VF1 measures < 10 °C. Cylinder charging is switched off if the temperature sensor RF1 measures > 12 °C.
If a domestic hot water cylinder is connected, it is heated if the temperature sensor measures < 10 °C.
Cylinder charging is switched off if the temperature sensor SP measures > 15 °C.

Caution:
Risk of damage due to freezing.
This function is not active if the value "none" is set in the Menu A3 (→ **Tab. 9.9**) "hydraulic integration of the auxiliary heater" for the auxiliary heater. In this case, an external electric auxiliary heater cannot support low temperature operation, nor is emergency operation after a fault leading to permanent deactivation or the emergency frost protection function possible.
Parts of the hydraulic system are not protected if the values "Hot water", "CH" or "DHW+CH" (=external auxiliary heater) have been set.
- ➤ You must ensure the hydraulic integration of the auxiliary heating system in the Menu A3 (→ **Tab. 9.9**).

Testing the external sensors
The hydraulic basic circuit given by you during commissioning determines the required sensors. The heat pump permanently and automatically checks that all sensors are installed and operational.

Protection from loss of heating water
An analogue pressure sensor monitors a possible water shortage and switches the heat pump off if the water pressure is below 50 kPa (0,5 bar), and on again if the water pressure is above 70 kPa (0,7 bar).

Pump seizing and valve seizing protection
In order to prevent a circulation pump or all diverter valves from jamming, the pump and the valves that have not been operated for 24 hrs are switched on every day in succession for a duration of approx. 20 seconds.

Protection against loss of brine (VWS only)
A pressure sensor monitors a possible brine shortage and switches the heat pump off if the brine pressure falls below 20 kPa (0,2 bar) only once. The fault 91 is displayed in the Error History.
The heat pump switches back on automatically when the brine pressure rises above 40 kPa (0,4 bar).
If the brine pressure drops below 60 kPa (0,6 bar) for a duration of more than one minute, a warning message appears in Menu ☰ 1 (→ **operating instructions**).

Underfloor protective circuit for all hydraulic devices without buffer tank (hydraulics diagram 1 and 3)
If the heater flow temperature in the underfloor heater circuit which is measured by the sensor VF2 continuously exceeds a value (max. CH temperature + compressor hysteresis + 2 K, factory setting : 52 °C) for more than 15 minutes, the heat pump switches itself off with the error message 72 (→ **Ch. 11.5**). When the heating flow temperature falls below this value again and the error has been reset, the heat pump switches back on.

You can change the maximum heater flow temperature using the parameter "maximum heater circuit" via vrDIALOG.
An incorporated limit thermostat is used as an additional safeguard. It switches the external heating circuit pump off when the set switch-off temperature is reached. During direct heating mode, it switches off the internal unit permanently.

Caution:
Risk of damage caused by too high a switch-off value for the underfloor protective circuit.
Underfloor heating systems can be damaged by excessive temperature caused by too high a switch-off value for the underfloor protective circuit.
- ➤ Set the value for the underfloor protective circuit to such a level that heated floors cannot be damaged by excessive temperatures.

Phase monitoring
The sequence (clockwise rotating field) and availability of all phases of the 400 V -voltage supply are continuously monitored during commissioning and consequent operation. If the sequence is not correct or a phase fails, a fault switch-off is applied to the heat pump in order to prevent damage to the compressor.
In order to prevent this fault message during a shutdown by the power supply operator (off period), the contact of the control system signal receiver must be connected to terminal 13 (Wiring diagram 2 and 3).

Freeze protection function for heat source
The outlet temperature of the heat source is constantly measured. If this falls below a particular value,the compressor temporarily switches off with the fault message 20 or 21 (→ **Ch. 11.4**). If this fault occurs three times in succession, the system shuts down (→ **Ch. 11.5**).
You can set the value (factory setting -10 °C) for protection against freezing for the geoTHERM VWS heat pumps in the Installation Assistent A4 (→ **Ch. 9.7.4**).
A value of +4 °C was set in the factory for the geoTHERM VWW heat pumps. This value cannot be changed.

9.3 Settable functions

You can set the following functions on the controller yourself and thereby adjust the heating system to local conditions or to the requirements of the operator.

The interface and setting options of the controller are divided into three levels:
- Operator level -> for the operator
- Code level -> for the expert technician
- vrDIALOG -> for the expert technician

9.3.1 Settable functions at operator level

- Timer programmes
- Holiday programming
- Energy saving function
- Override
- One-time recharging
- Cooling function
  The cooling function is possible if additional external components (not included in the delivery) are installed. Detailed information on this can be found in the **→ geoTHERM planning information**.

For a description of the functions **→ operating instructions**.

Emergency operation after a fault with consequent permanent switch-off (manual)
In the event of a permanent switch-off due to a fault, emergency operation can be enabled manually using the auxiliary heater (**→ Ch. 11.5**). The following parameters are shown in the display under the fault message"Low pressure switch-off":
- Reset (YES/NO)
  YES removes the fault message and enables compressor operation.
- DHW priority (YES/NO)
  YES enables the auxiliary heater for hot water handling.
- CH priority (YES/NO)
  YES enables the auxiliary heater for central heating.

9.3.2 Settable functions at code level

Floor drying
This function can be used to heat dry a newly laid floors (**→ Tab. 9.1**). The flow temperature corresponds to a routine stored in the controller and is independent of the outside temperature. When the function is enabled, all selected operation modes are interrupted (**Menu C6**) (**→ Tab. 9.6**).

Day after starting the function	Target flow temperature for this day
Starting temperature	25°C
1	25°C
2	30°C
3	35°C
4	40°C
5 – 12	45 °C
13	40°C
14	35°C
15	30°C
16	25°C
17 – 23	10°C (frost protection function, pump in operation)
24	30°C
25	35°C
26	40°C
27	45 °C
28	35°C
29	25°C

9.1 Floor drying procedure

The operating mode is displayed together with the current day and the target inlet temperature. The current day can be set manually.
If the **brine circuit/heat source circuit has not yet been completed**, the floor can be dried using the auxiliary heater.
➤ To do this, select the value "**Aux. heating only**" for the parameter "Aux on during CH" in the Menu C7 "Auxiliary heater"(**→ Tab. 9.6**).

Caution:
Possible overloading of the heat source due to excessive energy consumption.
During floor drying (e. g. in the winter months), the heat source may be overloaded and its regeneration may be degraded as a result.
➤ When outside temperatures are low, enable an external auxiliary heater for floor drying.

When the function is started, the current time of the start is saved. The day is changed exactly at this time.
After network-off/-on, the floor-drying begins as follows:

Last day before mains off	Start after mains on
1 - 15 16 17 - 23 24 - 28 29	1 16 17 24 29

9.2 Floor drying procedure after mains supply Off/On

If you do not wish to complete the floor drying using the specified temperatures or times, you can specify other flow target temperatures by means of fixed value control (→ **Ch. 9.3.3**). In the process, check the valid compressor hysteresis (settable via vrDIALOG, (→ **Ch. 9.8**).

Legionella protection
The purpose of the "Legionella protect." function is to kill off germs in the DHW tank and in the pipes.
Once every week, a connected hot water cylinder is brought to a temperature of approx. 75 °C.

➤ In the code level, enable the "Legionella protect". function in accordance with local regulations and in relation to the size of the cylinder, as required. Enable this function for cylinders with a drinking water volume of 400 litres or more. Set a start time and a start day (weekday) at/on which you want the heating to take place (**Menu C9**) (→ **Tab. 9.6**).

9.3.3 Additional functions via vrDIALOG

Remote parameter setting/alerting/diagnostics
It is possible to diagnose and set the heat pump via vrDIALOG 810/2 locally or via vrnetDIALOG 840/2 or 860/2 by remote maintenance. More detailed information can be found in their → **manuals**.

vrDIALOG 810/2 (eBUS) makes it possible to optimise boilers and control systems via computer-assisted graphic visualisation and configuration and thereby make use of energy saving potential. Both options enable you at any time to gain a visual impression of, and influence the processes which take place in the control system at any time. The programmes enable you to record and graphically prepare system data, to load device configurations and change and save them online or to save information in the form of reports.
Using vrDIALOG 810/2, you can make all the settings for the heat pump as well as other settings for optimisation.

Fixed value control
You can use this function to set a fixed flow temperature via vrDIALOG independently of the control which is influenced by atmospheric conditions.

9.4 Control principle

9.4.1 Possible heater system circuits

The following heater system circuits can be connected to the heat pump energy balance controller which is influenced by atmospheric conditions:
- a heater circuit,
- an indirectly heated domestic hot water cylinder,
- a hot water circulation pump,
- a buffer circuit.

To extend the system, a buffer circuit can be used to connect as many as six additional VR 60 mixed circuit modules (accessories), each with two mixed circuits.
The controller on the operating panel of the heat pump is used to programme the mixed circuits.

For more convenient operation, you can connect the remote control units VR 90 for the first six heating circuits (→ **Ch. 7.7.1**).

9.4.2 Energy balance control (hydraulics diagram 1 or 3)

When you have installed a heating system according to the hydraulics diagram examples for hydraulics diagram 1 or 3 (→ **Ch. 5.1** and → **Ch. 5.3**) the controller performs an energy balance adjustment.
For economical and fault-free operation of a heat pump, it is important to regiment the starting of the compressor.
The start-up of the compressor is the point at which the highest loading on the power mains occurs. With the help of the energy balance controller it is possible to minimise starts of the heat pump without compromising the comfort of a pleasant room atmosphere.
As with other weather-controlled heating controllers, the controller determines a supply set target temperature by capturing the outside temperature by means of a heating curve. The energy balance is calculated on the basis of this flow actual temperature and the flow target temperature, and the difference is measured every minute and added:

1 degree minute [°min] = 1 K temperature difference in the course of 1 minute

For a given heat deficiency (freely selectable in the controller (**Menu C2**) (→ **Tab. 9.6**) "Compr. start off"), the heat pump starts and does not switch off again until the amount of heat supplied is equal to the heat deficiency.
The larger the preset negative numerical value is, the longer the periods for which the compressor is kept running or at standstill.

If you have connected a VR 90 remote control unit, you must not configure it as a thermostat controller, otherwise the benefits of energy balancing will be lost.

9.4.3 Flow target temperature control (hydraulics diagram 2, 4 or 10)

If you have installed a heating system according to the hydraulics diagram example for hydraulics diagram 2, 4 or 10 (→ **Ch. 5.2**, **5.4** and **5.5**), the controller performs a flow target temperature adjustment.
The buffer tank is controlled depending on the supply set target temperature. The heat pump heats when the temperature of the VF1 flow temperature sensor of the buffer tank is lower than the target temperature. It heats for as long as it takes the return temperature sensor RF1 of the buffer tank to reach the target temperature plus 2 K.

9.5 Controller structure

The **basic display** can be seen as a **graphics display**. This is the starting point for all available menus.
Controller operation is described in detail in the → **operating instructions**.
If, when setting values, you do not activate any adjuster for 15 minutes, the basic display will automatically reappear.

The controller structure has three levels:

The **operator level** is intended for the operator (→ **operating instructions**).

The **code level** (heating engineer level) is reserved for heating engineers and is protected against accidental adjustment by means of a code input.
If no code is entered, i.e. the code level is not enabled, although the following parameters can be displayed in the individual menus, it is not possible to amend values.
The menus are divided into four areas:

Menu areas	Description	Description in section
C 1 to C11	Setting parameters of the heat pump functions for heating circuits	9.7.1
D1 to D5	Operate and test the heat pump in diagnosis mode	9.7.2
I1 to I5	Call up information on the heat pump settings	9.7.3
A1 to A10	Call up the wizard for installing the heat pump	9.7.4

9.3 Menu areas

The third level contains functions for optimising the heating installation and can be set by heating engineers only via **vrDIALOG 810/2 and vrnetDIALOG 840/2 and 860/2**.

9.6 Resetting to factory settings

➤ Before you carry out the operation, make a note of all set values in the controller, both at operator level and at code level (→ **operating instructions**) and at code level **→ Ch. 9.7**.

Display shown	Description
Wed 10.03.10 9:35 Factory setting Cancel NO Timer programmes NO Everything NO >Adjustable values	**Caution:** **Possible malfunction as a result of resetting to factory setting!** Resetting to the factory setting can delete system-specific settings and cause malfunctions or the shutdown of the heat pump. The heat pump cannot be damaged. ➤ Before you reset the heating system to the factory settings, page through all controller menus and **make a note** of all set values. ➤ Press and hold both adjusters for at least 5 seconds in order to call up the "Factory setting" menu. ➤ Select whether only time programmes or all values are to be reset to the factory setting. ➤ To do this, turn the adjuster until the cursor is in front of the value in the line for the operation which is to be carried out: ➤ Press the adjuster in order to mark the value. ➤ Turn the adjuster until **YES** is displayed. ➤ Press the adjuster . The operation is carried out. The display switches to the basic display after a few seconds. ➤ After carrying out this operation, have the values which were noted down to hand. ➤ Page through all values on the controller. ➤ Check the value and reset the values which were noted down, where necessary.

Menu point	Input	Result
Cancel	Yes	The set parameters are retained.
Time programmes	Yes	All programmed time windows are deleted
Everything	Yes	All set parameters are restored to the factory setting

9.4 Resetting to factory settings

9.7 Calling up Code level menus

The Code level has different areas in which you can change parameters or merely view them, depending on the context. The context can always be seen from the menu designation.

➤ To call up the Code level menu, select ⊟ 9 in the operator level (→ **operating instructions**).

Display shown	Description	Factory setting
Code level ⊟ 9 Code number: > 0 0 0 0 Standard Code: 1 0 0 0 >Adjust numeric character	In order to go to the **Code level** (heating engineer level), set the appropriate code (standard code 1000) and press the adjuster ⊡. In order to be able to read setting values without inputting the code, you must press the adjuster ⊟ once. You can then read all parameters of the Code level by turning the adjuster ⊟, but you cannot change them. Do not turn the adjuster ⊡, because by so doing, you will unintentionally alter the Code. **Security function:** 15 minutes after your last change in the Code level (pressing an adjuster), your Code is again reset. In order to then return to the Code level, you must re-input the Code. **Caution:** **The function may be adversely affected by incorrectly set parameters!** Unintentional modification of the system-specific parameters can cause malfunctions or damage to the heat pump. ➤ Do not try to access the code level by making arbitrary entries in the code level.	1000

9.5 Calling up Code level menus

9.7.1 Menu C: Set parameters for the heating system

Display shown	Description	Factory setting
Menu C: Set parameters for the heating system	You can set parameters for the various functions of the heat pump in the menus C1 to C11.	
Code level C1 change Code number: > 0 0 0 0 Accept change? no >Adjust numeric character	Menu for changing the code number. You can replace the standard code 1000 with a user-defined four-digit code here. If you change the code, make a note of the new code, otherwise you will no longer be able to make changes in the Code level.	1000
HK2 C2 Parameters Type Direct circuit Heating curve 0,30 Max. limit outs.temp. >20 °C Comp. starts at -120° min >Select temperature	If a VR 60 is connected, this menu appears several times (for each heating circuit). **Type:** Direct circuit (for direct hydraulic systems), Mixed circuit (for buffered hydraulic systems), Fixed value. **Heating curve:** Adjustable heating curve (not with fixed value). **Max limit outs.temp.:** Temperature threshold for switching off Heating mode (summer function). **Comp.starts at:** Set the degree minutes until compressor start (only with direct hydraulics).	0,3 20 °C
HK2 C2 Parameters Max. limit outs.temp. >20 °C Comp. starts at -120° min Minimum temperature 15 °C Maximum temperature 43 °C >Select temperature	**Minimum/maximum flow temp.:** Setting the limiting temperatures (min. and max.) that the heating circuit can request. The maximum flow temperature is also used to calculate the value for the underfloor protective circuit (maximum HC temperature + compressor hysteresis + 2 K). If the mixed circuit heating circuit type is set, the underfloor protective circuit is disabled and the factory setting is 50 °C. **Heating curve:** The heating curve represents the relation between the outside temperature and target flow temperature. The setting is made separately for each heating circuit. The efficiency and convenient operation of the heating system significantly depend on the selection of the correct heating curve. If too high a heating curve is selected, the temperature in the heating system will be excessive and, as a result, energy consumption will be higher. If the selected heating curve is too low, the desired temperature level may only be reached after a while or not reached at all.	15 °C 43 °C

9.6 Menu C: Set parameters for the heating system

Display shown	Description	Factory setting
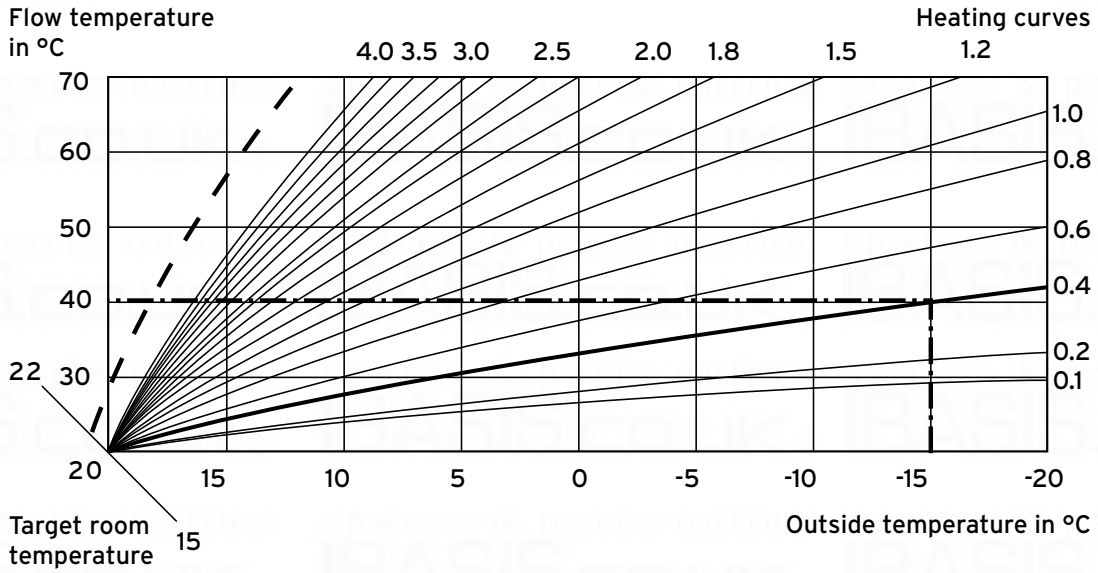		
HK2 C2 Parameters Type Fixed value Max. limit outs.temp. >20 °C Comp. starts at -120 °C >Select temperature	This display appears when "Fixed value" has been set. For energy balancing, the display "Comp. starts at" also appears.	
Buffer tank C3 Information Flow Temp. Setpoint 41 °C T buffer top <VF1> 29 °C T buffer Bottom <RF1> 25°C	This menu is only displayed if a buffer tank is used (e.g. Hydraulics diagram 2, 4 or 10). **Flow Temp. Setpoint:** Target flow temperature **T buffer top <VF1>:** Temperature of the buffer tank flow temperature sensor VF1 **T buffer Bottom <RF1>:** Temperature of the buffer tank return temperature sensor RF1	

9.6. Menu C: Set parameters for the heating system

Display shown	Description	Factory setting
HK2 C4 Information Flow Temp. Setpoint 41 °C Flow Temp. VF2 30 °C Status of pump OFF °mins lag/gain -183°min HK2 C4 Parameters Flow Temp. Setpoint 41 °C Flow Temp. VF2 29 °C Status of pump OFF Status hydr. mixer Open	For direct heating mode (e.g. Hydraulics diagram 1 or 3), the upper menu is displayed. The lower menu is only displayed if a buffer tank is used (e.g. Hydraulics diagram 2, 4 or 10 and when VR 60 is used, including repeatedly). **Flow Temp. Setpoint:** Flow temperature for the heating circuit **Flow Temp. VF2:** Current flow temperature VF2. **°mins lag/gain:** The °mins lag/gain is the sum of the difference between TARGET flow temperature and ACTUAL flow temperature per minute. The heat pump starts at a particular heat deficiency (see energy balance control (→ **Ch. 9.4.2**)). **Status of pump:** Indicates whether the pump is turned on or off (ON/OFF). **Status hydr. mixer:** The OPEN/CLOSED indication describes the direction in which the control system is driving the mixer. If the mixer is not activated, OFF appears. If a VR 60 is connected, the lower menu appears several times (for each heating circuit).	

9.6. Menu C: Set parameters for the heating system

Display shown	Description	Factory setting
HK2 C5 Parameters Switch-on room temp. >None Remote control YES 23 °C >Select mode	Only when VR 90 remote control is used: **Switch-on room temp.:** **None** = Room temperature from remote control is not taken into consideration during heating mode. The room temperature measured has no influence on cooling. **Switch on** = In addition to the set heating curve, the heating flow temperature is influenced depending on the difference between the room target and actual temperature. **Thermostat** = Room temperature from VR 90 is used directly for control (function of a room thermostat) The set heating curve is shifted. Heating is stopped as soon as the desired room temperature is exceeded by more than 1K. Heating is re-enabled when the temperature falls below the target room temperature. Select this setting if you have set energy balance control. **Cooling (only if external passive cooling is installed):** If the room temperature exceeds > RT_target (day) + 3K, cooling is requested. The essential requirement for a cooling request based on the room temperature is that the 24 hr outside temperature mean value is sufficiently high (less than 5K below the cooling start limit for the outside temperature-dependent cooling request). **Remote control:** Automatically indicates whether a VR 90 remote control unit is connected (YES/NO). If YES, the room temperature measured at the VR 90 is also displayed. This menu may appear repeatedly (for every heating circuit with remote control).	none 3K

9.6. Menu C: Set parameters for the heating system

Display shown	Description	Factory setting
Special function C6 Floor drying Day Temp. HK2: >1 0 °C HK3: HK4: >Set starting day	**Day:** You can select the start day for **floor drying**. **Temp.:** The temperature for the flow target temperature is called up automatically according to the floor drying function (day values 25/30/35 °C) (→ **Ch. 9.3.2**). It takes approx. 20 seconds for the actual value to be displayed! **Deactivating floor drying function:** set to Day "0". Depending on the configuration of the heating system, the display will indicate for other heating circuits if required.	0
Auxiliary heater C7 Aux on peak rate >NO Aux on during CH no CH Aux on during DHW no CH Aux heater on at -600° min >Select ↓	**Aux on during CH** **no CH:** CH blocked. **comfort:** CH is enabled, depending on the bivalence point and energy integral or buffer cylinder temperature. **CH only:** Heating only through auxiliary heating, e.g. during emergency operation. **Aux on during DHW** **no CH:** CH blocked. **comfort:** Auxiliary heater supplies the temperature level which cannot be achieved by the compressor (approx. > 55 °C cylinder temperature). **CH only:** Domestic hot water heating only through auxiliary heating, e.g. during emergency operation (if "no CH" was previously enabled, the max. domestic hot water of approx. 55 °C applies; if "comfort" was enabled, the set value for the max. domestic hot water in Menu ⊟ 4 applies). **Aux heater on at:** Set the degree minutes until the auxiliary heating starts, added to the degree minutes for the start of the compressor. Example: -600°min plus -120°min => start at -720°min. **Out T. aux htr on (Bivalence point):** Auxiliary heater for reheating is only enabled in heating mode below this outside temperature (settable in **Tab. 9.9, Menu A3**)..	no CH no CH

9.6. Menu C: Set parameters for the heating system

Display shown	Description	Factory setting
Auxiliary heater C7 Aux on peak rate >NO Aux on during CH no CH Aux on during DHW no CH Aux heater on at -600° min >Select ↓	**Aux on peak rate:** If you set wiring diagram 2, this menu item also appears in the top line. If you set "YES", auxiliary heating operation is enabled during the aux. on peak rate. This setting has precedence over the settings for "Aux on during CH" and "Aux on during DHW". The set auxiliary heating permanently ensures the heating up of the heating water and hot water up to the set target values. If the internal additional electric heating has been hydraulically integrated as auxiliary heating (factory setting), this may lead to high energy costs. (Not applicable for VWS/VWW ..0/2)	NO
Auxiliary heater C7 Hysteresis aux. heating. 5 K >Select	**Auxiliary heating hysteresis:** Forced switching on of the auxiliary heating if: Actual flow temperature < target flow temperature minus hysteresis Forced switching off of the auxiliary heating if: Actual flow temperature > target flow temperature plus hysteresis After 15 minutes, compressor mode applies for all system hydraulics. The amount of time until the auxiliary heating can start can be read from Menu D3.	5 K
Cooling C8 Flow temperature 22 °C Cooling Hours >Select	**Only if external passive cooling is installed, VWS only:** **Flow temperature:** Display of target flow temperature. The value can be changed. **Caution:** **Risk of damage caused by fall in temperature below thawing point and formation of condensation.** Adequate cooling is guaranteed even at a cooling mode flow temperature of 20 °C. ➤ Do not set the cooling mode flow temperature too low. **Cooling Hours:** Brine pump operating hours in cooling mode.	20°C

9.6. Menu C: Set parameters for the heating system

Display shown	Description	Factory setting
Legionella protect. C9 Parameters Legionella protect. OFF Legionella start 04:00 >Select	**Legionella protect.:** OFF/Mo/Tu/We/Th/Fr/Sa/Su **Legionella start:** The time which was set determines when the legionella protection function starts. The legionella protection function is carried out by the auxiliary heating on the preset day of the week, at the preset time, if the auxiliary heating has been activated. For this function, the controller sets the flow target temperature to 76 °C/74 °C (2 K hysteresis). The legionella protection function is terminated when the current flow temperature at the cylinder has reached 73 °C for at least 30 min, or after 90 minutes if 73 °C is not reached (e.g. if hot water is drawn during this period). The processes of the legionella protection function start in a connected drinking water station VPM W.	OFF 04:00
Pump control C10 Parameters Circulation pump 100 % >Select	**Circulation pump:** The setting range 1 - 100% is not a setting for the pump output, but is a division of time periods relating to an interval of 10 min., e.g. 80% = 8 min. operation, 2 min. break. The time period is active. In this time period, the circulation pump clocks in accordance with the set percentage value. The circulation pump does not start if the DHW cylinder is still too cold. Recommended settings for systems with VPS/2 → **Planning information**.	100 %
Solar tank C11 Parameters Maximum flow temp. 95 °C >Select temperature	This menu only appears if a solar tank is installed, e.g. VPS /2 **Maximum flow temp.:** If sufficient solar energy is available, a connected buffer tank VPS /2 is heated beyond the target temperatures for heating and hot water to the maximum temperature set here. The heating circuits connected to the buffer tank must be mixed circuits.	

9.6. Menu C: Set parameters for the heating system

9.7.2 Menu D: Carrying out diagnoses

Display shown	Description	Factory setting
Menu D: Perform diagnostics	**Caution:** **Risk of damage to heat pump components.** In diagnosis mode, internal safety equipment and settings are disabled. Frequent switching on and off can lead to compressor damage. ➤ As far as possible, do not switch diagnosis mode on and off repeatedly in succession. In Menus D1 to D5 you can operate and test the heat pump in diagnostic mode. For each setting, it is not possible to exit the diagnosis menus, except "Test" = "no" (menu D1). The system is automatically reset 15 minutes after the last keypress. **In the diagnostic mode, the pre-, minimum and run-on times of the compressor, pumps and other components are not heeded!**	
Diagnosis D1 Coolant circuit Test >no Comp high pressure 11.9 bar T outlet compressor 66 °C Comp Low Pressure 2.3 bar T inlet compressor 0 °C	**Test:** no/off/heating/hot water. Setting the operation mode for the heat pump in order to test the performance of the heat pump. **Comp High Pressure:** Display for compressor outlet refrigerant pressure **T outlet compressor:** (compressor outlet, high pressure): Display of temperature sensor T1.* **Comp Low Pressure:** Display for compressor inlet refrigerant pressure. **T inlet compressor:** (compressor inlet, intake side): Display of temperature sensor T2.*	–

9.7 Menu D: Carrying out diagnoses*

* see Figs. 1 and 2 in the appendix

Display shown	Description	Factory setting
Diagnosis D2 Coolant circuit Superheating 6 K Subcooling 10 K Temp TEV inlet 10 °C Compressor On	**Superheating:** Superheating of the coolant calculated from T2* and low pressure sensor. Only displayed when the compressor is operating. If the display "-50 °C" appears, the temperature sensor T2 on the compressor inlet is faulty. No warning message is recorded in the Error History. **Subcooling:** Subcooling of the coolant calculated from T4* and high pressure sensor. Only displayed when the compressor is operating. If the display "--°C" appears, the temperature sensor T4 on the Temp TEV inlet is faulty. No warning message is recorded in the Error History. **Temp TEV inlet:** Temperature at the inlet of the thermal expansion valve.* **Compressor:** Compressor status: ON/OFF/x min. (Time in minutes until the start of the compressor when a heat request is present)	–
Diagnosis D3 Central Heating Current flow temp. 27°C Current return temp 24 °C CH pump OFF CH pressure 1.2 bar Auxiliary heater OFF	**Current flow temp.:** Current flow temperature T6.* **Current return temp:** Current return temperature T5.* **CH pump:** CH pump status: Rotation speed in %/OFF. **CH pressure:** Pressure in the heating circuit (heating circuit pressure sensor). **Auxiliary heater:** Status of auxiliary heating: ON/OFF	–

9.7 Menu D: Carrying out diagnoses*

* see Figs. 1 and 2 in the appendix

Display shown	Description	Factory setting
Diagnosis D4 Heat source T return source 10 °C T outlet Evap. 9 °C Brine pump ON Brine pressure 1.5 bar	**T return source:** Brine water temperature/well water temperature at the heat pump inlet, T3.* **T outlet Evap.:** Brine water temperature/well water temperature at the heat pump outlet, T8.* **Brine pump:** VWS only: Brine pump status: ON/OFF. VWW only: Well pump status: ON/OFF **Brine pressure (VWS only):** Brine pressure at the heat source pressure sensor.	–
Diagnosis D5 Heating circuit Buffer VF1 45 °C Buffer RF1 36 °C Flow sensor VF2 38 °C Current DHW temp. 52 °C <UV1> HK	**Buffer VF1:** Flow temperature sensor VF1 of the buffer tank. **Buffer RF1:** Return temperature sensor RF1 of the buffer tank. **Flow sensor VF2:** Current heating flow temperature. **Current DHW temp.:** Temperature in the DHW tank. **<UV1>:** = Status of the 3-way diverter valve for heating/cylinder charging (CH = heating circuit, HW = hot water).	

9.7 Menu D: Carrying out diagnoses*

* see Figs. 1 and 2 in the appendix

9.7.3 Menu I: Display general information

Display shown	Description	Factory setting
Menu I: Displaying general information	In Menus I1 to I4 you can obtain information regarding the settings for the heat pump.	
Error History I1 Fault number >1 Fault code 96 10.03.10 07:18 Pressure sensor coolant error	Display of the error memory, showing the last 20 errors in the order they appeared. The last fault to appear always has fault number 1. The fault number is displayed with fault code, date/time of occurrence and a brief fault description. The error number shows the order in which the errors occurred. The error code identifies the error. A list can be found in **→ Ch. 11**. Turning the adjuster ⊟ displays the next fault.	–
Statistics I2 Compressor hours 7 hours Compressor starts 33 Auxiliary heater operation 2 hours Auxiliary heater starts 21	**Compressor hours:** Compressor operating hours to date. **Compressor starts:** Number of compressor starts to date. **Auxiliary heater operation:** Auxiliary heater operating hours to date. **Auxiliary heater starts:** Number of auxiliary heating starts to date.	–
Software versions I3 I/O card 1 4.04 User Interface 1 3.04 VR 90 4 2.21	**I/O card:** Software release I/O card (PCB in the heat pump). **User interface:** User interface software version (display in the operating panel). **VR 90:** displays the software release when a VR 90 is connected.	–

9.8 Menu I: Displaying general information

Display shown	Description	Factory setting
I4 Reset? NO Code 1: 0000 Code 2: FFFF Codes accepted ? NO >Select	**Reset:** Resetting fault messages with consequent switch-off. All functions currently in progress are immediately disconnected. The heat pump starts up again.	
	Caution: **Risk of damage to the heat pump.** Incorrect settings damage the heat pump. ➤ On no account must the Code values be changed.	
	Code 1/Code 2: Values must not be changed!	0000; FFFF NO

9.8 Menu I: Displaying general information

9.7.4 Menu A: Calling up Installation Assistent

Display shown	Description	Factory setting
Menu A: Calling up Installation Assistent	The Installation Assistent appears automatically when the heat pump is commissioned. You are guided through the first two menus A1 and A2. You now have the opportunity to subsequently change the settings once more.	
Installationsassistent A1 Sprache >DE deutsch Standort >DE >Sprache wählen	During the initial installation the controller always starts with this menu (Installation Assistent). **Sprache (Language):** Set the local language **Standort (Location):** (only when a VPM S solar charging station is installed) By inputting a location in the form of a country code, e.g. DE, and using the time of day established by a DCF receiver, an internal sun calendar in the solar station calculates the times of sunrise and sunset. Testing the collector temperature by switching on the solar pump in 10 minute intervals is suspended at night-time.	
Installation Assistent A2 Appliance Code 5 Hydraulic scheme 6 Electric Wiring Diagram 1 Accept change YES >Select	The hydraulic and wiring systems must be adjusted by the installer during commissioning. The Appliance Code has already been set in the factory and must not be changed. After resetting to factory settings, you must re-input the value, where required. **Appliance Code:** Type — Designation 11 — VWS 220/2 12 — VWS 300/2 13 — VWS 380/2 14 — VWS 460/2 23 — VWW 220/2 24 — VWW 300/2 25 — VWW 380/2 26 — VWW 460/2	

9.9 Menu A: Calling up Installation Assistent

Display shown	Description	Factory setting
	Hydraulic scheme: 1 = without buffer tank, without domestic hot water cylinder → **Fig. 5.2** 2 = with buffer tank, without domestic hot water cylinder → **Fig. 5.3** 3 = without buffer tank, with domestic hot water cylinder → **Fig. 5.4** 4 = with buffer tank, with domestic hot water cylinder or combination cylinder with solar and/ or drinking water station → **Fig. 5.5** 10 = with buffer tank. with domestic hot water cylinder or combination cylinder with solar and/ or drinking water station, with external passive cooling → **Fig. 5.6** **Electric Wiring Diagram:** 1 = all standard tariff → **Fig. 7.3** 2 = low tariff for compressor → **Fig. 7.5** **Accept change: YES/NO**; **"YES"** means that all the set values will be saved.	
Installation Assistant A3 Auxiliary heater Integration of the Auxiliary heater intern Out T. aux htr on 0 °C Cylinder type Coil >Select	**integration of the Auxiliary heater**: This setting determines if and where the auxiliary heating is hydraulically connected: – **none:** Internal and external auxiliary heating disabled. **Caution!** **Risk of damage caused by freezing** In this setting, there is no frost protection during emergency operation. ➤ Do not deactivate the auxiliary heating if there is a risk of frost. – **intern:** Additional electric heating in the heat pump. – **DHW + CH:** External auxiliary heating available for domestic hot water and heating circuit. – **DHW:** External auxiliary heating available only for domestic hot water.	Setting for VWS/VWW ..0/2 intern (Not applicable for VWS/VWW ..0/2)

9.9 Menu A: Calling up Installation Assistent

Display shown	Description	Factory setting
Installation Assistant A3 Auxiliary heater Integration of the Auxiliary heater intern Out T. aux htr on 0 °C Cylinder type Coil >Select	The controller will only activate the auxiliary heating if it is enabled in Menu C7 "Auxiliary heater" and the following condition is satisfied: **Out T. aux htr on (Bivalence point):** Auxiliary heater for reheating is only enabled in heating mode and during parallel operation below this outside temperature. **Cylinder type:** Setting type of cylinder for the domestic hot water cylinder. **Coil:** Pipe coil cylinder, e.g. VIH RW 300. **Layered:** Layered cylinder, e.g. VPS /2.	0 °C
Installation Assistent A4 Geothermal settings Freeze protect temp. -10 °C >Select	**Freeze protect temp. (VWS only):** Minimum permissible brine outlet temperature. If the temperature falls below this value, error message 21/22 or 61/62 appears and the compressor switches off. **Freeze protect temp. (VWW only):** Protection against frost = 4 °C.	-10 °C
Tool A5 Component Test 1 <HK2-P> On <CP> OFF <ZH> OFF <SK2-P> OFF >Select ↓ CH pump On Compressor On Brine pump On Soft start On <UV1> HK Brine mixer Open Cooling Valve Open	**Caution:** **Risk of damage due to improper operation.** The electronics of the high-efficiency pump and the compressor may be damaged by overfrequent starts. ➤ Start the pumps and the compressor a maximum of three in any one hour. The component test can be used to test the actuators of the heat pump. This intervention lasts for a maximum of 20 minutes and ignores current controller inputs during this time. The heat pump then returns to the previous operating state. When the compressor is switched on, the heating circuit pump and brine pump are also automatically connected. **UV1** = Heating/cylinder charging diverter valve in position DHW = "Hot water preparation" CH = "Heating mode"	OFF

9.9 Menu A: Calling up Installation Assistent

Display shown	Description	Factory setting
	Only if external passive cooling is installed: **Brine mixer** = brine mixing valve in position OFF, OPEN, CLOSED. **Cooling valve** = Heating/cooling diverter valve in position OPEN = "Heating" CLOSED = "Cooling"	
Tool A6 Component Test 2 Component VR 60 Addr. 4 Actuators OFF Sensors VF a 29 °C > select	This menu only appears if more than one heating circuit and at least one VR 60 are installed. The component test 2 can be used to test the actuators of the connected accessories. This intervention lasts for a maximum of 20 minutes and ignores current controller inputs during this time. Afterwards, the heat pump reverts to its previous operating condition.	
Tool A7 Venting prog OFF	**Venting prog (VWS only):** System venting programme is started by inputting the value 30. The brine pump alternates between 50 minutes operating and 10 minutes off. A connected circulation pump as well as the heating/cylinder charging diverter valve and cooling diverter valve (only if external passive cooling is installed) are also put into operation or switched.	–
Tool A8 Calibration Outside temperature 0.0 K DHW sensor SP 0.0 K VF2 flow sensor 0.0 K Buffer sensor RF1 0.0 K >Select correction value ↓	Manual adjustment of the displayed temperatures. Offset adjustment range **Outside temperature:** +/- 5 K, step size 1.0 K. **DHW sensor SP:** +/- 3 K, step size 0.5 K. **VF2 flow sensor:** The flow sensor VF2 is always displayed. +/- 3 K, step size 0.5 K. **Buffer sensor RF1:** +/- 3 K, step size 0.5 K. **T buffer top <VF1>:** +/- 3 K, step size 0.5 K.	 0 K 0 K 0 K 0 K 0 K
Tool A8 Calibration T buffer top <VF1> 0.0 K Display contrast 16	Internal sensors can only be changed via vrDIALOG or vrnetDIALOG, and buffer and cylinder sensors only with the appropriate hydraulics. **Display contrast:** Setting the display contrast (0 – 25).	 16

9.9 Menu A: Calling up Installation Assistent

Display shown	Description	Factory setting
Installation assistant A9 VPM W With electric heating element NO >Select	The menu only appears if a VPM W drinking water station is installed. **With electrical heating element:** Connection of an additionally installed additional electric heating system for creating the temperature for the Anti-legionella circuit in the circulation line by inputting "**YES**".	
Installation assistant A10 Compressor Compressor hyster. 7 K Max. CH return temp. 46 °C >Select	**Compressor hyster.:** The menu entry only appears for hydraulic schemes with direct heating mode. Forced switching on of the compressor if: Actual flow temperature < target flow temperature minus hysteresis Forced switching off of the compressor if: Actual flow temperature > target flow temperature plus hysteresis **Max. CH return temp.:** Setting the limit for the return temperature for the compressor operation. This function is intended to avoid unnecessary, short-time compressor operation.	7 K 46 °C
End of Installation Assistant Install. completed? >YES >Adjustable values	Commissioning: Only set "Install. completed?" to "YES" until you are sure that everything has been correctly adjusted. When you have confirmed with "**YES**", the controller switches to the basic display. The heat pump starts under its autonomous control system. This menu no longer appears once "**YES"** has been set during commissioning.	

9.9 Menu A: Calling up Installation Assistent

9.8 Parameters which can only be set with vrDIALOG

Settings via vrDIALOG must only be undertaken by an approved heating engineer.

Parameters	Description	Factory setting
Calibration of temperature sensors	Internal sensors (T1, T3, T5, T6 and T8) can only be calibrated via vrDIALOG 810/2.	
Change name: Heating circuit	**Change name:** You can name each heating circuit in the heating system individually. A maximum of ten letters are available per heating circuit for this purpose. The selected names are saved automatically and displayed on the corresponding displays. Depending on the system configuration, the names of additional heating circuits appear in the display.	HK2: HK2
Software version	The status provides information on the operating condition of the heat pump software.	–
Elec Tariff switch	**Elec Tariff switch:** Elec Tariff switch status by actuating the energy supplier contact (cut-off time by power supply operator): "no" = no cut-off time, "yes" = cut-off time active, actuation e. g. via ripple control receiver/ripple control signal.	–
Phase Status	**Phase Status:** displays whether all 3 phases are present (OK/Error).	–
Phase Sequence	**Phase Sequence:** The display shows whether the rotating field direction is correct (OK/error).	–
Minimum flow temp. Maximum flow temp.	**Minimum flow temp./Maximum flow temp.:** Setting the limiting temperatures (min. and max.) that the heating circuit can request. The maximum flow temperature is also used to calculate the value for the underfloor protection circuit (maximum CH temperature + compressor hysteresis + 2K).	15 °C 43 °C
Pre-loading time	**Pre-loading time:** To take account of the inertia of the underfloor heating, you can manually set a pre-heat before the start of the programmed heating time.	0 hrs

9.10 Parameters which can only be set with vrDIALOG

Parameters	Description	Factory setting
Max. heating time 20 min Max. DHW load time 40 min	**Max. heating time** = Maximum time after which the operation mode switches back to cylinder charging mode when there is still a parallel demand present for DHW. **Max. DHW load time** = Time after which the operation mode switches from cylinder charging mode to heating mode when a parallel demand for heating is present.	20 min. 40 min.
Compressor hyster.	**Compressor hyster.:** Forced switch-on of the compressor when: Current flow temperature < Setpoint flow temperature - Hysteresis Forced switch-off of the compressor when: Current flow temperature > Setpoint flow temperature + Hysteresis	7 K
Compressor starts	**Compressor starts/h:** Maximum possible number of compressor starts per hr (3 - 5).	3
Max. CH return temp. 46 °C	**Max. CH return temp.:** Setting the limit of the return temperature for compressor operation. This function is intended to avoid unnecessary, short-time compressor operation.	46 °C
Perm. temperature spread	**Perm. temperature spread**: Max. permissible difference between brine inlet and outlet temperature. An error message appears and the compressor switches off if it is exceeded. If 20 K has been set, the function is deactivated.	20 K
Brine pump pre-run	**Brine pump pre-run:** Time period by which the brine pump switches on before the compressor.	1 min.

9.10 Parameters which can only be set with vrDIALOG

Parameters	Description	Factory setting
Temp. fault detection after	**Temp. fault detection** If the setpoint for the flow temperature of a heating circuit is not reached after the preset time, a corresponding error message appears in the display and the error is stored in the error list (display of the last ten errors). This function can be switched on or off.	OFF
Next service due	**Acceleration mode** With Next service due ON, the time steps for the integral energy balance are changed from 1 min. to 1 sec. and the energy balancing is thereby accelerated by a factor of 60. The minimum run time of 4 min. and the minimum off time of 5 min of the compressor are not changed.	–
Aux heater on at	**Aux heater on at** This value is only relevant for the direct heating mode and when an external auxiliary heating system has been enabled for the heating mode. It specifies the value of the energy integral below which the auxiliary heating system to the compressor is connected. This value is relative to the energy integral start value for the compressor, i.e. for standard values, the switch-on threshold for the auxiliary heating system is: -120 °min. - 600 °min. = -720 °min. The auxiliary heating system is switched off if the flow target temperature at VF2 is exceeded by 3 K.	

9.10 Parameters which can only be set with vrDIALOG

10 Inspection and maintenance

10.1 Notes on inspection and maintenance

Continued efficient operation, reliability and a long service life require inspection and maintenance work to be carried out on the heating system by an approved heating engineer on an annual basis.
The inspection is intended to determine the actual condition of the respective device and compare it with the nominal condition. This is done by measuring, checking, observing.
Maintenance is required in order to correct possible deviations of the actual condition from the target condition. This normally is done by cleaning, adjustmenting and, if necessary, replacing individual components that are subject to wear.

Danger:
Risk of damage and personal injury through neglected and improper inspection and maintenance.
Inspection and maintenance must only be carried out by an approved heating engineer.
➤ Carry out the inspection and maintenance work described on a regular basis and to a professional standard.

Danger:
Risk of electric shock.
➤ Always switch off all power supplies before carrying out any electrical installation or servicing work.
➤ Check that there is no voltage.
➤ Ensure that the power supplies are secured against being inadvertently switched on again.

Danger:
Risk of combustion due to hot pipes and components.
Pipes and components of the heat pump can become extremely hot during operation.
➤ Allow the heat pump system to cool down sufficiently before inspection and maintenance work is started.

Only genuine Vaillant spare parts may be used for maintenance and repair work to ensure long-term correct operation of the geoTherm heat pump and to prevent the approved factory settings from being changed.

Replacement parts
An overview of the available genuine Vaillant spare parts can be obtained:
- From your parts wholesaler.
- Alternatively contact Spares Technical Enquiries on 01773 596615 or via email: technicalspares@groupservice.co.uk

10.2 Carrying out the inspection

The following work must be performed during the annual inspection.
- Check the pressure in the heating circuit.
- Check the quantity and concentration of the brine fluid and the pressure in the brine circuit (VWS only).

10.3 Carrying out the maintenance work

The heat pump is designed in such a way that only a very few maintenance operations need to be carried out. These maintenance operations must be carried out once a year, or as a result of the inspection.
- Check and clean the dirt filters in the heating circuit.
- Check and clean the dirt filters in the well water circuit (VWW only).
- Check the expansion vessel in the heating circuit for correct operation.
- Top up the heating water if the pressure in the heating circuit is too low (→ **Ch. 6.2**).

Danger:
Risk of personal injury through improper maintenance of the coolant circuit.
The burning of coolant produces toxic cyanide gases. If the point where coolant is escaping is touched, it may lead to frostbite.
➤ Ensure that only officially certified specialists with appropriate protective equipment perform maintenance work or access the coolant circuit.

According to Article 3 of (EC) Ordinance No. 842/2006 of the European Parliament and the Council of 17th May 2006 regarding specific fluorinated greenhouse gases, the operator of heat pumps with hermetically-sealed systems containing more than 6 kg of fluorinated greenhouse gases is obliged to have the leak-tightness of the system checked by qualified personnel once a year.
VWS/VWW 380/2 and 460/2 only:
- Check all components of the coolant circuit for corrosion and wear.
- Check the coolant circuit for leak tightness.

10.4 Carrying out a restart and trial operation

Danger:
Risk of injury due to hot and cold components.
The heat pump may only be put into operation after all the cladding sections have been fitted.
- Before restating, refit any heat pump panel parts which may have been removed, as described in (→ **Ch. 7.9**).

- Start the heat pump.
- Check the heat pump for faultless operation.

11 Fault diagnosis and rectification

Danger:
Risk of damage and personal injury due to incorrect fault diagnosis and improper rectification.
Operations for fault diagnosis and fault rectification must only be performed by an approved heating engineer.
➤ Carry out the operations described in a professional manner.

Danger:
Risk of electric shock!
➤ Always switch off all power supplies before starting work on the heat pump.
➤ Make sure that they are secured against inadvertent switching on again.

11.1 Fault types

To call up the Error History, see → **operating instructions**.

Five types of fault may occur, of which the first four are indicated by fault codes in the display:
- Faults on **components** which are connected via **eBUS**.
- **Faults with a consequent temporary warning message**
  The heat pump remains in operation and is not switched off.
- **Faults with consequent temporary switch-off**
  The heat pump is temporarily switched off and starts running again of its own accord. The fault is displayed and disappears automatically when the cause of the fault is no longer present or has been eliminated.
- **Faults with consequent permanent switch-off**
  The heat pump is permanently switched off. The heat pump can be started again after the cause of the fault has been rectified and the fault reset in the Error History (**Menu I 1**) (→ **Tab. 9.8**).
- In addition, **other types of fault/malfunction** may occur in the heat pump or heating system.

11.2 Faults in eBUS components

Fault code	Error text/description	Possible cause	Solution
1	XXX address YY not achievable	A component XXX connected via the eBUS, e.g. VR 60 with the address YY is not recognised.	➤ Check the eBUS lead and plug. ➤ Check that the address switch is correctly set.
4	XXX Address YY Sensor fault ZZZ	A sensor ZZZ of one of the components XXX connected via the eBUS, with the address YY, is faulty.	➤ Check the Pro-E plugs on the circuit boards. ➤ Check the sensors for correct operation. ➤ Replace the sensors.
5	XXXX setpoint not achieved	XXXX setpoint not achieved.	➤ Check the temperature target value. ➤ Check the contact of the temperature sensor with the medium to be measured and establish a proper contact if necessary.

11.1 Faults in eBUS components

11.3 Faults with temporary warning

The following warnings are caused by temporary malfunctions in the operation of the heat pump. The heat pump, including the compressor, remains in operation. The following faults are displayed in the Menu ☰ 1 as a warning message and in the Error History (→ **operating instructions**).

Fault code	Error text/description	Possible cause	Solution
26	Overheating on compressor pressure side	Excessively high output with a high flow temperature. VRC DCF receiver with integrated outside temperature sensor not connected (display "-60 °C" = calculated flow temperature too high).	➤ Reduce the heating curve. ➤ Check the required heating output (floor drying, building shell) and reduce if necessary. ➤ Connect the VRC DCF receiver provided.
36 (VWS only)	Low brine pressure	Pressure drop in the brine circuit due to leaks or air cushions. Pressure < 60 kPa (0.6 bar)	➤ Check the brine circuit for leaks. ➤ Top up the brine fluid. ➤ Rinse and bleed the brine circuit.

11.2 Faults with temporary warning

11.4 Fault with temporary switch-off

The compressor shuts down, the heat pump remains in operation. The compressor can start again after 5 min. at the earliest. (see below for exceptions).

Fault code	Error text/description	Possible cause	Solution
20	Heat source frost protect monitoring source outlet Heat source temperature spread (T3 - T8) > set value "Perm. temp. spread" This fault message is deactivated by default and can only be activated via vrDIALOG parameter "Perm. temp. spread" (20 K spread means deactivated).	Brine pump faulty, temperature sensor T8 or T3 faulty. Too little volume flow in the brine circuit. Air in the brine circuit.	➤ Check heat source flow rate. ➤ Check the quality of plug contact on the circuit board and on the cable harness. ➤ Check sensors for correct operation (resistance measurement based on VR 11 characteristics, see attachment). ➤ Replace the sensors. ➤ Check the volume flow of the brine pump (optimum spread approx. 3-5 K). ➤ Bleed the brine circuit.
21 (VWW only)	Heat source frost protect monitoring source outlet Source outlet temperature T8 too low (<4 °C)	Temperature sensor T8 faulty. No/full dirt filter in source return.	➤ Check the temperature level of the heat source. ➤ Check the quality of plug contact on the circuit board and on the cable harness. ➤ Check sensors for correct operation (resistance measurement based on VR 11 characteristics, **→ Tab. 17.2.** ➤ Replace the sensors. ➤ Check the volume flow of the well pump (optimum spread approx. 3-5 K). ➤ Fit/clean dirt filter.
22 (VWS only)	Heat source frost protect monitoring source outlet Source outlet temperature T8 too low (< Freeze protect temp. parameter in Menu A4)	Brine pump faulty, temperature sensor T8 faulty. Too little volume flow in the brine circuit. Air in the brine circuit.	➤ Check heat source flow rate. ➤ Check the quality of plug contact on the circuit board and on the cable harness. ➤ Check sensors for correct operation (resistance measurement based on VR 11 characteristics, see attachment). ➤ Replace the sensors. ➤ Check the volume flow of the brine pump (optimum spread approx. 3-5 K). ➤ Bleed the brine circuit.
23 (VWW only)	No ground water flow Integrated flow switch does not detect any volume flow	Filter in the heat source circuit blocked. Well pump faulty. Motor protection switch on the well pump has tripped. Flow switch faulty or not connected.	➤ Clean the filter. ➤ Check the correct operation of the well pump, and replace if necessary. ➤ Check the well pump for overload, e.g. through jamming of phase failure. ➤ Check the well pump, sluice and motor protection switch, and replace if necessary. ➤ Check the correct operation of the flow switch.

11.3 Fault with temporary switch-off

Fault code	Error text/description	Possible cause	Solution
27	Coolant pressure too high Heat consumption of heating circuit is too low. The integrated high pressure switch tripped at 3 MPa (30 bar) (g). The heat pump can start again after a 60 minute wait at the earliest.	Air in the heating system.	➤ Bleed the heating system.
		Pump output has dropped or heating pump is faulty.	➤ Check the heating pump, and replace if necessary.
		Radiator heating without hydraulic switch or buffer tank.	➤ Check the heating system.
		Buffer tank, sensors VF1 and RF1 interchanged.	➤ Check the position of the sensors.
		Too low a volume flow as a result of closing individual room controllers in an underfloor heating system. Heating mode is operated briefly after every HW loading if the outside temperature falls below the OT switch-off threshold. The control system checks if there is a heat demand.	➤ Check the heating system.
		Existing dirt strainers clogged or incorrectly dimensioned.	➤ Clean dirt strainers.
		Stop valves closed.	➤ Open all stop valves.
		Coolant flow rate too low (e.g. thermal expansion valve TEV incorrectly adjusted or faulty).	➤ Have the coolant circuit checked. Inform the factory customer service department.
		For VWS/VWW 38/2 and 46/2 only: The fault relay on the in-rush current limiter has responded. The red LED on the in-rush current limiter is flashing: 2x = Incorrect phase sequence 3x = Compressor motor overcurrent 4x = Thyristor module excess temperature 5x = Low voltage/phase failure 6x = Min./max. power frequency 7x = No compressor connected	➤ Check whether the green LED on the in-rush current limiter is lit. If the green LED is not lit, there is no power supply or the in-rush current limiter is faulty. ➤ Check the power supply and restore. ➤ Check the in-rush current limiter and inform the factory customer service department if necessary. ➤ VWS/VWW 38/2 and 46/2 only: If the green LED lights up and red LED is flashing, find the cause in the list of flash codes above and rectify the fault, and inform the factory customer service department if necessary.

11.3 Fault with temporary switch-off

Fault code	Error text/description	Possible cause	Solution
28	Coolant pressure too low Brine side/well water side is supplying too little heat. The integral low pressure switch has tripped at 125 kPa (1.25 bar) (g).	(VWS only) Air in the brine circuit. Brine fluid concentration too low.	➤ Bleed the brine circuit. ➤ Check the brine fluid frost protection and increase the brine concentration if necessary.
		(VWS only) The pump output of the brine pump has dropped or the brine pump is faulty.	➤ Check the brine pump, and replace if necessary.
		(VWS only) Not all circuits are circulating equally. Can be seen from the difference in the severity of icing on individual brine circuits.	➤ Adjust the brine circuits.
		Not all the required stop valves are open.	➤ Open all stop valves.
		Coolant flow rate too low (e.g. thermal expansion valve TEV incorrectly adjusted or faulty).	➤ Have the coolant circuit checked. Inform the factory customer service department.
		For VWS/VWW 38/2 and 46/2 only: The fault relay on the in-rush current limiter has responded. The red LED on the in-rush current limiter is flashing: 2x = Incorrect phase sequence 3x = Compressor motor overcurrent 4x = Thyristor module excess temperature 5x = Low voltage/phase failure 6x = Min./max. power frequency 7x = No compressor connected	➤ Check whether the green LED on the in-rush current limiter is lit. If the green LED is not lit, there is no power supply or the in-rush current limiter is faulty. ➤ Check the power supply and restore. ➤ Check the in-rush current limiter and inform the factory customer service department if necessary. ➤ VWS/VWW 38/2 and 46/2 only: If the green LED lights up and red LED is flashing, find the cause in the list of flash codes above and rectify the fault, and inform the factory customer service department if necessary.
29	Coolant pressure outside the range If the error occurs twice in a row the heat pump cannot be started until after 60 min. at the earliest.	Coolant pressure too high or too low, all causes mentioned at fault 27 and 28 are possible..	See faults 27 and 28.

11.3 Fault with temporary switch-off

11.5 Fault with permanent switch-off

The heat pump is switched off after the occurrence of a critical fault. After the cause of the faulty has been rectified, the heat pump can only be started again by resetting the fault (deleting the Error History)(see Menu I 1).
An exception applies in the case of fault 90 and 91. These do not have to be reset.
When the cause of the fault has been rectified, the heat pump restarts.

Emergency mode
Depending on the type of the fault message, you may be able to set the heat pump to continue running in an emergency mode via an external electric auxiliary heating system or an external boiler until the cause of the fault has been rectified. You can find out from (→ **Tab. 11.4**) for which fault messages emergency operation is possible.

For emergency operation, it is necessary that the hydraulic integration of the auxiliary heating system is guaranteed and an integrated auxiliary heating system has also been activated.

- ➤ Check whether in Menu A3 (→ **Tab. 9.9**) an auxiliary heating system has not been locked. The setting "none" locks all installed emergency functions and frost protection functions of an auxiliary heating system. The factory setting is "none". If an external auxiliary heating system is connected, you can set "DHW+CH" here.
- ➤ For emergency operation, set the parameters of the auxiliary heating system for "Heating mode" and "Hot water mode" to "CH only" in Menu C7 (→ **Tab. 9.6**).

In the case of a fault with consequent permanent switch-off, the following parameters appear in the display under the fault message "Low pressure switch-off":

- Reset (YES/NO)
  Deletes the fault message and enables compressor operation.
- DHW priority (YES/NO)
  Enables auxiliary heating hot water mode.
- CH priority (YES/NO)
  Enables auxiliary heating for heating mode.

Emergency operation can be activated either for heating mode (YES), hot water mode (YES) or for both (YES/YES).

Note that emergency operation which has been activated manually must also be deactivated manually, otherwise this function remains active.
The emergency operation function is otherwise only disconnected by:

- Disconnection of the controller circuit board power supply (power failure in the mains power supply or disconnection via domestic fuses/circuit breakers) or
- RESET of the software (I4) or
- Resetting the fault message

The heat pump is then restarted with compressor operation.

You can see from the basic display whether the emergency operation function is (still) because only the vertical arrow (auxiliary heating system) is shown in black, whereas the horizontal arrow (environmental energy) appears in white.

- ➤ After the fault has been rectified, switch off emergency operation by selecting the setting "Reset" "YES" in the display "Low pressure switch-off"
  (Turn the adjuster fully to the left).

Fault code	Error text/description	Emergency mode	Possible cause	Solution
32	Error heat source sensor T8 Short circuit/disconnection in the sensor	possible	The internal temperature sensor for the brine outlet temperature is faulty or not plugged in correctly on the circuit board.	➤ Check the quality of plug contact on the circuit board and on the cable harness. ➤ Check sensors for correct operation (resistance measurement based on VR 11 characteristics, → **Tab. 17.2**). ➤ Replace the sensors.
33	Error heat circuit pressure sensor Short circuit/disconnection in the pressure sensor	–	The pressure sensor in the heating circuit is faulty or not properly plugged in.	➤ Check the quality of plug contact on the circuit board and on the cable harness. ➤ Check the pressure sensor for correct operation. ➤ Replace the pressure sensor.
34	Error brine pressure sensor (VWS only) Short circuit/disconnection in the pressure sensor	possible	The pressure sensor in the brine circuit is faulty or not properly plugged in.	
40	Error comp outlet sensor T1 Short circuit/disconnection in the sensor	possible	The internal temperature sensor on the high pressure side of the compressor is faulty or not properly plugged into the PCB.	➤ Check the quality of plug contact on the circuit board and on the cable harness. ➤ Check sensors for correct operation (resistance measurement based on VR 11 characteristics, → **Tab. 17.2**). ➤ Replace the sensors.
41	Error heat source sensor T3 Short circuit/disconnection in the sensor	possible	The internal temperature sensor for the brine inlet temperature is faulty or not plugged in correctly on the circuit board.	
42	Error HP return sensor T5 Short circuit/disconnection in the sensor	possible	The internal temperature sensor on the heating return line is faulty or not properly plugged into the PCB.	
43	Error HP flow sensor T6 Short circuit/disconnection in the sensor	possible	The internal temperature sensor on the heating flow line is faulty or not properly plugged into the PCB.	
44	Error outdoor sensor AF Short circuit/disconnection in the sensor	possible	The outside temperature sensor or its connecting cable is faulty or it is not connected correctly.	➤ Check the Pro-E plug on the circuit board, check the connection line. ➤ Replace the sensors.
45	Error DHW tank sensor SP Short circuit/disconnection in the sensor	possible	The temperature sensor in the DHW tank is faulty or it is not connected correctly.	➤ Check the Pro-E plug on the circuit board. ➤ Check sensors for correct operation (resistance measurement based on VR 10 characteristics, → **Tab. 17.1**). ➤ Replace the sensors.
46	Error HB flow sensor VF1 Short circuit/disconnection in the sensor	possible	The flow temperature sensor of the buffer tank is faulty or the connection is incorrect.	
47	Error HB return sensor RF1 Short circuit/disconnection in the sensor	possible	The return temperature sensor of the buffer tank is faulty or the connection is incorrect.	
48	Error flow sensor VF2 Short circuit/disconnection in the sensor	Hot water mode possible	The clamp-on temperature sensor VF2 in the heating circuit is faulty or it is not connected correctly.	

11.4 Fault with permanent switch-off

Fault code	Error text/description	Emergency mode	Possible cause	Solution
52	Sensors do not match the hydraulic scheme	_	Hydraulics diagram incorrectly inputted. Sensors not connected correctly.	➤ Check the hydraulics diagram and sensor positions based on the existing heating system.
60	Heat source frost protect monitoring source outlet Error 20 has occurred three times in a row	possible	See Error 20.	See Error 20.
61 (VWW only)	Heat source frost protect monitoring source outlet Fault 21 has occurred three times in succession.	possible	See Error 21.	See Error 21.
62 (VWS only)	Heat source frost protect monitoring source outlet Error 22 has occurred three times in a row	possible	See Error 22.	See Error 22.
63 (VWW only)	No ground water flow Fault 23 has occurred three times in succession.	possible	See Error 23.	See Error 23.
72	Flow temperature too high for underfloor heating Flow temperature higher than set value for 15 min. (max. CH temperature + compressor hysteresis + 2 K) ➔ **Ch. 9.8**,, factory setting: 52 °C).	_	Flow sensor VF2 fitted too close to the heat pump.	➤ Change the position of the flow sensor according to the hydraulics diagram.
			Flow sensor VF2 is faulty	➤ Check flow sensor VF2, replace if necessary.
			Pump output of the external heating circuit pump has dropped or pump is faulty.	➤ Check the external heating circuit pump, and replace if necessary.
			Existing dirt strainers clogged or incorrectly dimensioned.	➤ Clean dirt strainers.
			Mixer behind buffer tank is faulty.	➤ Test mixer, replace if necessary.
			Max. CH temperature set too low.	➤ Check "Max. CH temp." setting.
81	Coolant pressure too high Error 27 has occurred three times in a row	possible	See Error 27.	See Error 27.
83	Coolant pressure too low. Check heat source Fault 28 has occurred three times in succession	possible	See Error 28.	See Error 28.

11.4 Fault with permanent switch-off

Fault code	Error text/description	Emergency mode	Possible cause	Solution
84	Coolant pressure outside the range Error 29 has occurred three times in a row	possible	See Error 29.	See Error 29.
			Motor protection switch of the compressor (Kriwan module) has opened due to excessive winding temperature.	Kriwan module closes of its own accord after 30 minutes.
			For VWS/VWW 22/2 and 30/2 only: Circuit breaker of the temperature monitor on the in-rush current limiter faulty.	➤ Check bypass (ICL compressor) and wiring. If the green LED on the in-rush current limiter does not light up, the temperature monitor circuit breaker is faulty. ➤ Inform the factory customer service department.
			For VWS/VWW 38/2 and 46/2 only: The fault relay on the in-rush current limiter has responded. The red LED on the in-rush current limiter is flashing: 2x = Incorrect phase sequence 3x = Compressor motor overcurrent 4x = Thyristor module excess temperature 5x = Low voltage/phase failure 6x = Min./max. power frequency 7x = No compressor connected	➤ Check whether the green LED on the in-rush current limiter is lit. If the green LED is not lit, there is no power supply or the in-rush current limiter is faulty. ➤ Check the power supply and restore. ➤ Check the in-rush current limiter and inform the factory customer service department if necessary. ➤ For VWS/VWW 38/2 and 46/2 only: If the green LED lights up and red LED is flashing, find the cause in the list of flash codes above and rectify the fault, and inform the factory customer service department if necessary.
			For VWS/VWW 38/2 and 46/2 only: Phase failure in combination with fault 94.	➤ See fault 94.
90	Heating system pressure too low Pressure <50 kPa (0.5 bar). Heat pump shuts down and goes into operation automatically when the pressure rises above 70 kPa (0.7 bar).	–	Pressure drop in the heating system due to leaks, air cushions or a faulty expansion vessel.	➤ Check the heating system for leaks. ➤ Top up water and bleed. ➤ Check the expansion vessel.
			Screw couplings at the rear of the heat pump are not sealing correctly.	➤ Retighten screw couplings.
			Compression screw connections on the 3-way diverter valve are leaking.	➤ Retighten the compression screw connections on the 3-way diverter valve for heating/cylinder charging.
91	Brine pressure too low Pressure < 20 kPa (0.2 bar) Heat pump shuts down and goes into operation automatically when the pressure rises above 40 kPa (0,4 bar).	possible	(VWS only) Pressure drop in the brine circuit due to leaks or air cushions.	➤ Check the brine circuit for leaks, top up brine and bleed.
			(VWS only) Brine pressure sensor faulty.	➤ Check the quality of plug contact on the circuit board and on the cable harness. ➤ Check the pressure sensor for correct operation. ➤ Replace the pressure sensor.
			Circuit breaker F1 on printed circuit board faulty.	➤ Check circuit breaker F1 and replace if necessary.
			Brine pressure switch fitted on-site (VWS only) or limit thermostat has opened.	➤ Check the brine pressure switch or limit thermostat.

11.4 Fault with permanent switch-off

Fault code	Error text/description	Emergency mode	Possible cause	Solution
94	Phase loss. Check fuse One or more phases have failed	possible	Loss of a phase or a fuse has tripped.	➤ Check fuses and cable connections (power supply to the compressor).
			Badly tightened electrical connections.	➤ Check electrical connections.
			Mains voltage too low.	➤ Measure voltage at heat pump terminal box.
			Energy supply company switch-off to incorrectly set electric wiring diagram (e. g. Electric Wiring Diagram 1).	➤ Check the setting of the wiring diagram.
			In-rush current limiter faulty or incorrectly connected.	➤ Check the in-rush current limiter and inform the factory customer service department if necessary.
95	Incorrect compressor direction of rotation Correct the phase sequence Phase sequence incorrect	possible	No voltage (temporary switch-off by energy supply company)	➤ Connect the contact of the ripple control receiver to terminal 13.
			Phases switched over.	➤ Change the phase sequence by switching over 2 phases at a time on the mains feed.
			In-rush current limiter faulty or incorrectly connected.	➤ Check the in-rush current limiter and inform the factory customer service department if necessary.
96	Coolant circuit pressure sensor fault short-circuit in the pressure sensor	possible	A pressure sensor in the coolant circuit is faulty or not properly plugged in.	➤ Check the quality of plug contact on the circuit board and on the cable harness. ➤ Check the pressure sensor for correct operation. ➤ Replace the pressure sensor.

11.4 Fault with permanent switch-off

11.6 Other errors/malfunctions

Malfunction sign	Possible cause	Solution
The auxiliary heating system does not work even though it has been enabled by the controller (e. g. during the switch-off time by the power supply operator (energy supply company switch-off time)), the heating system or the DHW tank do not reach the desired temperature.	The auxiliary heating system is connected on a low-rate tariff and this tariff has just been blocked by the power supply operator.	➤ Check whether the auxiliary heating is on a low-rate tariff and a power company blockage is in effect.
	The auxiliary heating safety thermostat has triggered.	➤ Release the safety thermostat by pressing the pushbutton.
	Possible causes if the thermostat trips again:	
	Air in the heating system. Blocked dirt filter in the return of the heating system.	➤ Bleeding heating circuit. Clean the blocked dirt filters.
	The heating pump has stopped or is running too slowly.	➤ Check the heating pump and replace if necessary.
Noise in the heating circuit.	Air in the heating circuit.	➤ Bleeding heating circuit.
	Dirt in the heating circuit.	➤ Flush the heating circuit.
	Bivalent temperature incorrectly set.	➤ Change the bivalent temperature (**Menu A3**) → **Tab. 9.9**.
	Pump output of the external heating pump has dropped or pump is faulty.	➤ Check functioning of the pump; replace if necessary.
Traces of water under or next to the heat pump.	The condensate drain is blocked.	➤ Condensate inside the unit is collected in the condensate pan and may be discharged under the heat pump (not a fault). Check the line insulation inside the unit, and re-insulate if necessary in order to reduce condensate formation.
	Leaks in the heating circuit.	➤ Check the heating circuit components (pump, auxiliary heating system, pipes) for leaks. ➤ If necessary, retighten the screw couplings and replace the seals.
Outside temperature indicates -60 °C.	Outside temperature sensor not connected or faulty.	➤ Check outside temperature sensor.
Temperatures in the heating circuit too low or too high.	Target room temperature not optimally set.	➤ Change the target room temperature (Menu ⊟ 1, → **operating instructions**).
	Night set back temperature not optimally set.	➤ Change the night set back temperature (Menu ⊟ 1, → **operating instructions**).
	Heating curve not optimally set.	➤ Change the heating curve (**Menu C2**) → **Tab. 9.6**

11.5 Other errors/malfunctions

12 Recycling and disposal

Both the geoTHERM heat pump and the associated transport packaging are made predominantly out of recyclable raw materials.

12.1 Disposing of the heat pump

If the Vaillant unit is identified with this symbol, it does not regarded as household waste at the end of its useful life. Therefore, ensure that the Vaillant unit and any accessories are properly disposed of at the end of their useful life.

12.2 Disposing of the packaging

➤ Make sure that the transport packaging is handed over to a proper disposal organisation.

12.3 Disposing of brine fluid (VWS only)

Danger:
Risk of explosion and combustion!
The brine fluid ethanol is extremely flammable, both as liquid and steam. A potentially explosive combination of steam/air may accumulate.
➤ Keep away from heat, sparks, naked flames and hot surfaces.
➤ Ensure that there is sufficient ventilation in the event of accidental release.
➤ Avoid the accumulation of steam/air mixtures. Keep brine fluid containers closed.
➤ Observe the safety data sheet that accompanies the brine fluid.

Danger:
Risk of injury due to chemical burns!
Brine fluids are harmful to health.
➤ Avoid contact with the skin and eyes.
➤ Do not inhale or swallow.
➤ Always wear gloves and protective goggles.
➤ Observe the safety data sheet that accompanies the brine fluid.

➤ Ensure that the brine fluid is disposed of at an appropriate waste site or waste incineration plant, for example, in compliance with local regulations.
➤ Contact the local municipal sanitation department or the mobile environmental service for quantities under 100 l.

12.4 Arranging disposal of coolant

The geoTherm heat pump is filled with R 407 C coolant. The coolant must be disposed of separately from the heat pump.
➤ Arrange for the coolant to be recycled or disposed of by accredited specialists in accordance with regulations.

Caution:
Risk of damage to the environment.
This heat pump contains R 407 C coolant. The coolant must not be allowed to escape into the atmosphere. R 407 C is a fluorinated greenhouse gas covered by the Kyoto Protocol, with a GWP of 1653 (GWP = Global Warming Potential).
➤ Before the heat pump is disposed of, have the coolant which it contains completely drained into a suitable container so that it can then be recycled or disposed of in accordance with regulations.

13 Customer service and guarantee

13.1 Vaillant warranty

Vaillant provides a full parts and labour warranty for this appliance.
The appliance must be installed by a suitably competent person in accordance with the Gas Safety (Installation and Use) Regulations 1998, and the manufacturer's instructions. In the UK competent persons approved at the time by the Health and Safety Executive undertake the work in compliance with safe and satisfactory standards. All unvented domestic hot water cylinders must be installed by a competent person to the prevailing building regulations at the time of installation (G3).

Terms and conditions apply to the warranty, details of which can be found on the warranty registration card included with this appliance.

Failure to install and commission this appliance in compliance with the manufacturer's instructions may invalidate the warranty (this does not affect the customer's statutory rights).

13.2 Vaillant Service

To ensure regular servicing, it is strongly recommended that arrangements are made for a Maintenance Agreement. Please contact Vaillant Service Solutions (0870 6060 777) for further details.

14 Technical data

14.1 Technical Data VWS

Description	Unit	VWS 220/2	VWS 300/2	VWS 380/2	VWS 460/2
Type	–	Brine-to-water heat pump			
Area of application	–	The heat pumps are intended exclusively for domestic use as heating appliances for closed heating and hot water systems and for hot water generation.			
Dimensions Height without connections Width Depth without pillars Depth with pillars	 mm mm mm mm	 1200 760 900 1100			
Weights Total weight - with packaging - without packaging - ready for operation	 kg kg kg	 356 326 341	 370 340 359	 394 364 386	 417 387 414
Electrical data Nominal voltage / Measuring voltage - Compressor - Control circuit		 3/N/PE 400V 50Hz 1/N/PE 230V 50Hz			
- Brine pump		1/N/PE 230V 50Hz		3/N/PE 400V 50Hz	
- CH pump (on-site) - Auxiliary heater system (on-site)		1/N/PE 230V 50Hz (max. 2 A) 3/N/PE 400V 50Hz			
- Power factor	cos φ	0,7 - 0,84	0,72 - 0,83	0,76 - 0,86	0,75 - 0,86
- Required max. network impedance - With factory-set in-rush current limiter	Ohm	0,472	0,450	0,270	0,100
Fuse - Trigger characteristics - Breaking current	 – A	 C, three-pole switching (disconnection of the three mains connection lines by a switching operation) 20	 25	 32	 40
Start-up current - without in-rush current limiter - With factory-set in-rush current limiter	 A A	 99 44	 127 65	 167 85	 198 110
Electrical power consumption: - min. at B-5/W35 - max. at B20/W60 - Auxiliary heater system (on-site, max.)	 kW kW kW	 5,0 10,0 3 x 2,3	 6,4 12,0 3 x 2,3	 8,5 16,0 3 x 2,3	 10,1 18,0 3 x 2,3
EN 60529 level of protection	-	IP 20			
Hydraulic connections - Heating circuit flow and return - Heat source flow and return	 Inch, mm Inch, mm	 G 1 1/2", DN 32 G 1 1/2", DN 32			

14.1 Technical Data VWS

Description	Unit	VWS 220/2	VWS 300/2	VWS 380/2	VWS 460/2
Heat source circuit / Brine circuit - Brine type/brine concentration - max. operating pressure - min. inlet temperature warm brine - max. inlet temperature warm brine	 - MPa (bar) °C °C	 Ethylene glycol/min. 25% vol., max. 30% vol. 0,3 (3) -10 20			
- Volume of the heat source circuit in the heat pump	l	6,2	8,6	10,0	12,4
- Nominal volumetric flow rate ΔT 3K - Pressure loss at nominal volumetric flow rate ΔT 3K - Electrical power consumption/brine pump rated power	m^3/h kPa (mbar) W	5,3 36,0 (360) 200	7,1 32,0 (320) 200	9,1 51,0 (510) 400	11,0 39,0 (390) 400
- Type of pump		Integrated wet rotor pump			
- Energy label pump according to the Europump classification scheme		D		C	
- Heat source circuit materials within the heat pump	-	Cu, CuZn-Alloy, Stainless Steel, Fe, EPDM			
Heating circuit - Permitted water condition - max. operating pressure - min. flow temperature - max. flow temperature	 MPa (bar) °C °C	 Do not enrich heating water with frost or corrosion protection agents. Soften the heating water at water hardnesses from 3.0 mmol/l (16.8° dH) according to Directive VDI2035 sheet 1 0,3 (3) 25 62			
– Volume of water content of the brine circuit in the heat pump	l	8,3	10,3	12,0	14,1
- Nominal volumetric flow rate ΔT 5K - Pressure loss at nominal volumetric flow rate ΔT 5K - Nominal volumetric flow rate ΔT 10K - Pressure loss at nominal volumetric flow rate ΔT 10K	m^3/h kPa (mbar) m^3/h kPa (mbar)	3,8 7,2 (72) 1,9 1,6 (16)	5,2 8,6 (86) 2,6 2,5 (25)	6,6 13,7 (137) 3,3 5,0 (50)	8,0 18,0 (180) 3,9 5,5 (55)
- Heating circuit materials within the heat pump	-	Cu, CuZn-Alloy, Stainless Steel, Fe, EPDM			
Coolant circuit - coolant type	 -	 R 407 C			
- Quantity - Number of revolutions EX valve	kg -	4,1 6,5	5,99 9	6,7 8	8,6 6,5
- Permissible operating overpressure - Compressor type - Oil	MPa (bar) - -	2,9 (29) Scroll Ester (EMKARATE RL32-3MAF)			
- Oil filling quantity	l	4,0	4,0	4,14	4,14

14.1 Technical Data VWS

Description	Unit	VWS 220/2	VWS 300/2	VWS 380/2	VWS 460/2
Heat pump performance data	The following performance data is applicable to new units with clean heat exchangers.				
B0/W35 ΔT 5K In accordance with DIN EN 14511					
- Heating output	kW	22,0	29,8	38,3	45,9
- Power consumption	kW	5,0	6,5	8,5	10,0
- Output figure/coefficient of performance COP	-	4,4	4,6	4,5	4,6
B0/W35 ΔT 10K In accordance with DIN EN 255					
- Heating output	kW	22,3	30,3	37,8	45,5
- Power consumption	kW	4,7	6,3	8,0	9,7
- Output figure/coefficient of performance COP	-	4,60	4,8	4,7	4,7
B0/W55 ΔT 5K In accordance with DIN EN 14511					
- Heating output	kW	20,3	26,8	36,2	42,3
- Power consumption	kW	6,6	8,8	11,7	14,1
- Output figure/coefficient of performance COP	-	3,1	3,0	3,1	3,0
Interior noise level (B0/W35 in accordance with EN 12102)	dB(A)	63	63	63	65
Installation location - permitted ambient temperature	°C	Interior/dry 7 - 25			
Application limits At the same volume flow rates as for the nominal output test under standard nominal conditions with nominal volume flow rates and a spread of ΔT 3K in the brine circuit and ΔT 5K in the heating circuit		B-10/W25 B-10/W55 B-5/W62 B20/W62 B20/W25 Operation of the pump outside the application limits results in the heat pump being switched off by the internal control and safety installations.			

14.1 Technical Data VWS

14.2 Technical Data VWW

Description	Unit	VWW 220/2	VWW 300/2	VWW 380/2	VWW 460/2
Type	–	Water-to-water heat pump			
Area of application	–	The heat pumps are intended exclusively for domestic use as heating appliances for closed heating and hot water systems and for hot water generation.			
Dimensions Height without connections Width Depth without pillars Depth with pillars	 mm mm mm mm	 1200 760 900 1100			
Weights Total weight - with packaging - without packaging - ready for operation	 kg kg kg	 340 310 325	 354 324 343	 374 344 366	 397 367 394
Electrical data Nominal voltage / Measuring voltage - Compressor - Control circuit		3/N/PE 400V 50Hz 1/N/PE 230V 50Hz			
- Brine pump / Well pump (on-site)		3/N/PE 400V 50Hz (max. 3 x 5 A)		3/N/PE 400V 50Hz (max. 3 x 8,5 A)	
- CH pump (on-site) - Auxiliary heater system (on-site)		1/N/PE 230V 50Hz (max. 2 A) 3/N/PE 400V 50Hz			
- Power factor	cos φ	0,7 - 0,84	0,72 - 0,83	0,76 - 0,86	0,75 - 0,86
Required max. network impedance - with factory-set in-rush current limiter	Ohm	0,472	0,450	0,270	0,100
Fuse - Trigger characteristics - Breaking current	 – A	 C, three-pole switching (disconnection of the three mains connection lines by a switching operation) 20	 25	 32	 40
Start-up current - without in-rush current limiter - with factory-set in-rush current limiter	 A A	 99 44	 127 65	 167 85	 198 110
Electrical power consumption: - min. at W10/W35 - max. at W20/W60 - Auxiliary heater (On-site, max.)	 kW kW kW	 5,0 10,0 3 x 2,3	 6,4 12,0 3 x 2,3	 8,5 16,0 3 x 2,3	 10,1 18,0 3 x 2,3
EN 60529 level of protection	-	IP 20			
Hydraulic connections - Heating circuit flow and return - Heat source flow and return	 Inch, mm Inch, mm	 G 1 1/2", DN 32 G 1 1/2", DN 32			
Heat source circuit / Well water circuit - permitted water condition - max. operating pressure - min. inlet temperature warm brine - max. inlet temperature warm brine	 - MPa (bar) °C °C	 pH difference in accordance with DIN 38404-C10-R2 (< +0.5 / > -0.5) Corrosion in accordance with DIN 50930 T4 (1993) (S1 < 0.5) Corrosion in accordance with DIN 50930 T5 (S3 < 0.5 / > 1.0) 0,3 (3) 4 20			
- Volume of the heat source circuit in the heat pump	l	6,2	8,6	10,0	12,4
- Nominal volumetric flow rate ΔT 3K - Internal pressure loss at nominal volumetric flow rate	m^3/h kPa (mbar)	6,42 51,2 (512)	8,76 58,2 (582)	10,8 71,9 (719)	13,1 86,0 (860)
- Heat source circuit materials within the heat pump	-	Cu, CuZn-Alloy, Stainless Steel, Fe, EPDM			

14.2 Technical Data VWW

Description	Unit	VWW 220/2	VWW 300/2	VWW 380/2	VWW 460/2
Heating circuit - Permitted water condition		Do not enrich heating water with frost or corrosion protection agents. Soften the heating water at water hardnesses from 3.0 mmol/l (16.8° dH) according to Directive VDI2035 sheet 1			
- max. operating pressure	MPa (bar)	0,3 (3)			
- min. flow temperature	°C	25			
- max. flow temperature	°C	62			
– Volume of water content of the brine circuit in the heat pump	l	8,3	10,3	12,0	14,1
- Nominal volumetric flow rate ΔT 5K	m^3/h	5,10	6,96	8,70	10,44
- Pressure loss at nominal volumetric flow rate ΔT 5K	kPa (mbar)	12,6 (126)	15,2 (152)	21,8 (218)	30,3 (303)
- Nominal volumetric flow rate ΔT 10K	m^3/h	2,60	3,60	4,50	5,52
- Pressure loss at nominal volumetric flow rate ΔT 10K	kPa (mbar)	3,9 (39)	4,5 (45)	6,7 (67)	9,6 (96)
- Heating circuit materials within the heat pump	-	Cu, CuZn-Alloy, Stainless Steel, Fe, EPDM			
Coolant circuit - coolant type	-	R 407 C			
- Quantity	kg	4,3	5,99	6,7	8,6
- Number of revolutions EX valve	-	8,5	9,5	8,5	9,5
- Permissible operating overpressure	MPa (bar)	2,9 (29)			
- Compressor type	-	Scroll			
- Oil	-	Ester (EMKARATE RL32-3MAF)			
- Oil filling quantity	l	4,0	4,0	4,14	4,14
Heat pump performance data	The following performance data is applicable to new units with clean heat exchangers.				
W10/W35 ΔT 5K In accordance with DIN EN 14511					
- Heating output	kW	29,9	41,6	52,6	63,6
- Power consumption	kW	5,8	7,8	9,8	12,4
- Output figure/coefficient of performance COP	-	5,2	5,3	5,3	5,1
W10/W35 ΔT 10K In accordance with DIN EN 255					
- Heating output	kW	30,2	42,4	52,3	64,7
- Power consumption	kW	5,5	7,5	9,4	12,0
- Output figure/coefficient of performance COP	-	5,5	5,7	5,5	5,4
W10/W55 ΔT 5K In accordance with DIN EN 14511					
- Heating output	kW	26,9	37,2	47,4	57,3
- Power consumption	kW	7,6	10,4	12,9	15,8
- Output figure/coefficient of performance COP	-	3,5	3,6	3,6	3,6
Interior noise level (W10/W35 in accordance with EN 12102)	dB(A)	63	63	63	65
Installation location - permitted ambient temperature	°C	Interior/dry 7 - 25			
Application limits At the same volume flow rates as for the nominal output test under standard nominal conditions with nominal volume flow rates and a spread of ΔT 3K in the brine circuit and ΔT 5K in the heating circuit		W7/W25 W7/W62 W20/W62 W20/W35 W10/W25 Operation of the pump outside the application limits results in the heat pump being switched off by the internal control and safety installations.			

14.2 Technical Data VWW

15 Commissioning report

- Fill out the following report form before you commission the heat pump.
- Only operate the heat pump when all points have been satisfied in essence.

Heating circuit checklist	
During planning, was consideration given to parts of the building that are to be heated at a later time?	
Was the power for the domestic hot water supply considered?	
Were the heating circuits in the system hydraulically balanced?	
Were leakage pressures determined by pipe network calculations?	
If planning calculations showed that pressure losses were to be expected: Was a second pump incorporated to overcome the pressure losses?	
Was the nominal volumetric flow rate of the heat pump taken into consideration?	
Was a dirt filter incorporated in the return?	
Was the heating system provided with all the safety installations described in this manual?	
Were an overflow funnel and blow-out line incorporated?	
Was the heating circuit flushed, filled and bled?	
Was the heating circuit checked for leaks?	
Were the pipes thermally insulated (against diffusion)?	
Brine circuit checklist (VWS only)	
Was the correct brine fluid used for filling?	
Was the brine circuit checked for leak tightness?	
Was the brine circuit properly bled?	
Which frost protection agent was used and what setting for frost protection was inputted in the controller?	
Was the frost protection (-15 °C ± 1 K) checked with a frost protection tester?	
Was a pressure switch built into the brine circuit?	
Was the pressure switch connected to the heat pump?	
Was a dirt filter used at the brine side inlet of the heat pump for the filling operation? After completion, was the dirt filter removed?	
Were non-return valves built into the brine circuit?	
Were balancing valves built into the brine circuit?	

15.1 Commissioning report

Brine circuit checklist (VWS only)	
Were the brine circuits hydraulically equalised?	
Was the brine expansion tank fitted?	
Was the brine circuit filled to a pressure of 200 kPa (2 bar) ?	
Was the brine expansion tank filled to 2/3 full?	
Were isolating devices fitted ahead of the heat pump?	
Were the pipes thermally insulated against vapour diffusion?	
Were cold pipe clips used for the installation of the brine circuit lines inside the building?	
Well water circuit checklist (VWW only)	
Was the water or its composition examined?	
Was a second heat exchanger used for decoupling?	
Was a dirt filter fitted at the water side input to the heat pump?	
Were isolating devices fitted ahead of the heat pump?	
Were the pipes thermally insulated against vapour diffusion?	
Electrical installation checklist	
Is a separator with 3-pole switch-off and a contact opening of at least 3 mm available on-site and has this been labelled accordingly?	
Were all electrical connections carried out properly and according to the specified wiring diagrams?	
Was the protective earth properly connected?	
Do all cables have the required cable cross sections?	
Were the required automatic safety devices used and labelled in accordance with the conductor cross-sections and installation methods used?	
Were all cables fastened using strain relief clamps?	
If available, was a ripple control signal connected to the heat pump by the power supply operator?	
Assembly checklist	
Were all the cladding panels fitted?	

15.1 Commissioning report

16 Reference

➤ Fill out the following tables in order to facilitate any servicing work which may be necessary.

Installation and commissioning were carried out by:

Heat source construction	
Date:	
Company:	
Name:	
Address	
Telephone:	

Electrical installation	
Date:	
Company:	
Name:	
Address	
Telephone:	

Start-up	
Date:	
Company:	
Name:	
Address	
Telephone:	

Planning for the heat pump installation	Details
Details regarding heat demand	
Heating load of the property	
Domestic hot water	
Was a central DHW supply used?	
Was the user's behaviour regarding domestic hot water demand taken into account?	
During planning, was the increased hot water demand of Jacuzzis and showers taken into account?	
Units used in the heat pump installation	**Details**
Unit designations of the installed heat pump	
Details regarding the domestic hot water cylinder	
Domestic hot water cylinder type	
Domestic hot water cylinder capacity	
External electric auxiliary heating system? Yes/No	
Details regarding room thermostats	
VR 90/other/none	
Details regarding the heat source system	**Details**
Ground probe (number, drilling depth, spacing between probes)	
Number of probes	
Spacing between probes	
Drilling depth of the probes	
Details regarding the ground collector	**Details**
Number of brine circuits	
Distance between the installed pipes	
Pipe diameter	
Installation depth of the collector in the ground	
Length of the longest brine circuit	

16.1 Reference checklist

Details for VWW	Details
Size of the mass flow rate which can be taken from the well.	
Well water pump type	
Details regarding the heat consuming system	**Details**
If a second pump was incorporated to overcome the pressure losses: Manufacturer and type of the second pump	
Heating load of the underfloor heating	
Heating load of the wall heating	
Heating load of the combination underfloor heating/radiators	
Was a secondary return installed? (Yes/No)	
Commissioning of the heat pump installation	**Details**
Checks before handing over to the user	
Pressure of the heating circuit in a cold state	
Does the heating system get warm?	
Does the water in the DHW tank get warm?	
Were the basic settings made on the controller?	
Was the legionella protection function programmed? (Interval and temperature)	
Handover to the user	**Details**
Was the user instructed on the following points?	
Basic function and operation of the controller	
Operation of externally placed bleed valves	
Maintenance intervals	
Documentation handover	**Details**
Was the operating instructions handed over to the user?	
Was the installation manual handed over to the user?	
Were the manuals for all the accessories handed over to the user?	

16.1 Reference checklist

17 Appendix

Sensor characteristics

External heat pump temperature sensors VR 10

Temperature (°C)	Resistance (ohms)
-40	87879
-35	63774
-30	46747
-25	34599
-20	25848
-15	19484
-10	14814
-5	11358
0	8778
5	6836
10	5363
15	4238
20	3372
25	2700
30	2176
35	1764
40	1439
45	1180
50	973
55	807
60	672
65	562
70	473
75	400
80	339
85	289
90	247
95	212
100	183
105	158
110	137
115	120
120	104
125	92
130	81
135	71
140	63
145	56
150	50
155	44

17.1 Appendix, VR 10 sensor characteristics

Internal heat pump temperature sensors VR 11

Temperature (°C)	Resistance (ohms)
-40	327344
-35	237193
-30	173657
-25	128410
-20	95862
-15	72222
-10	54892
-5	42073
0	32510
5	25316
10	19862
15	15694
20	12486
25	10000
30	8060
35	6535
40	5330
45	4372
50	3605
55	2989
60	2490
65	2084
70	1753
75	1481
80	1256
85	1070
90	916
95	786
100	678
105	586
110	509
115	443
120	387
125	339
130	298
135	263
140	232
145	206
150	183
155	163

17.2 Appendix, VR 11 sensor characteristics

VRC-DCF outside temperature sensor

Temperature (°C)	Resistance (ohms)
-25	2167
-20	2067
-15	1976
-10	1862
-5	1745
0	1619
5	1494
10	1387
15	1246
20	1128
25	1020
30	920
35	831
40	740

17.3 Appendix, VRC DCF sensor characteristics

Heat pump schematic - VWS

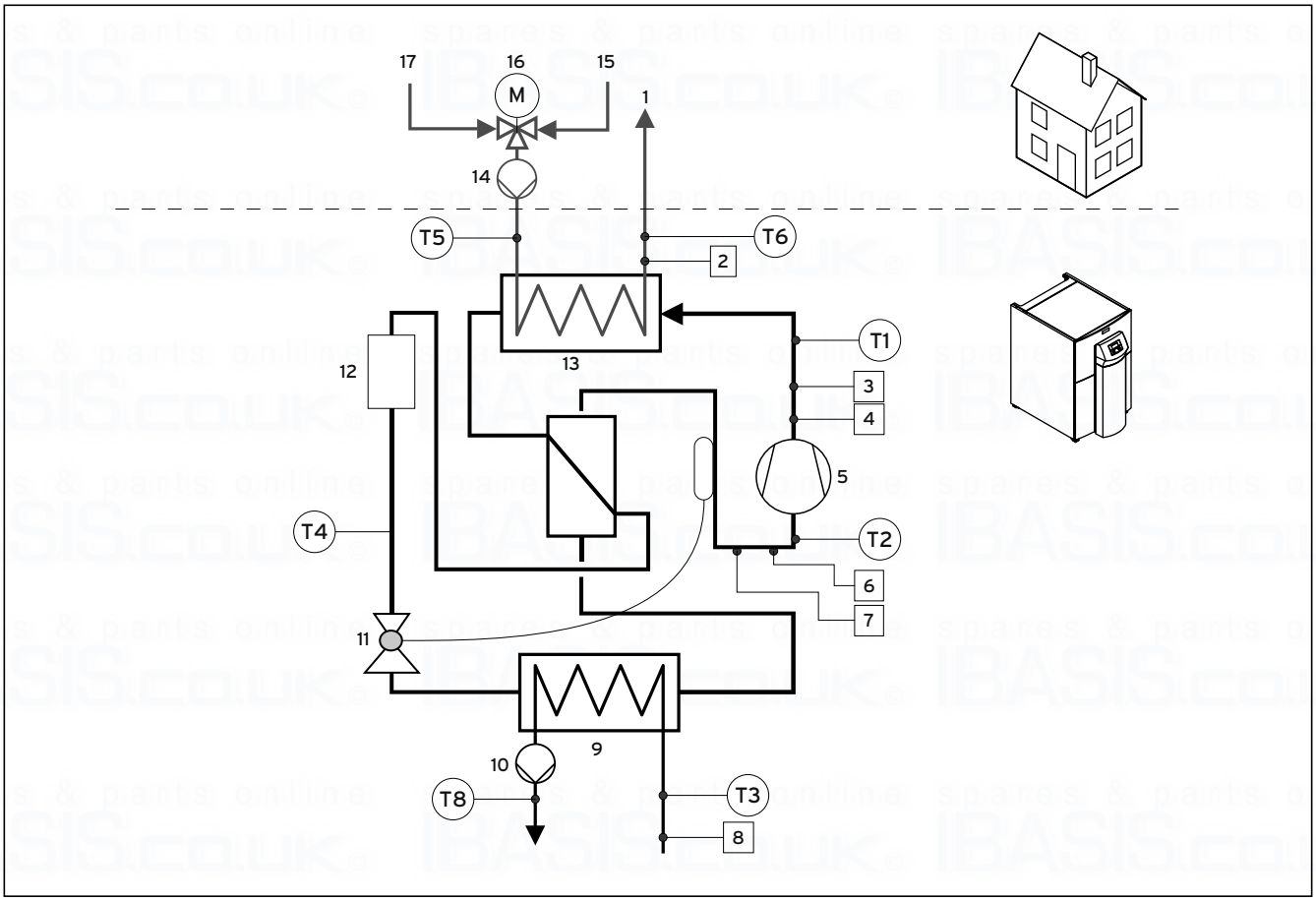

17.1 Appendix, Heat pump scheme VWS ..0/2

Key

1 Heating supply line
2 Heating circuit pressure sensor
3 High pressure sensor
4 High pressure switch
5 Compressor
6 Low pressure sensor
7 Low pressure switch
8 Brine circuit pressure sensor
9 Evaporator
10 Brine circuit pump
11 Expansion valve
12 Filter drier
13 Condenser
14 heating circuit pump (to be fitted on-site)
15 Heating return line
16 3-way heating/cylinder charging diverter valve (to be fitted on-site)
17 DHW return line

Heat pump schematic - VWW

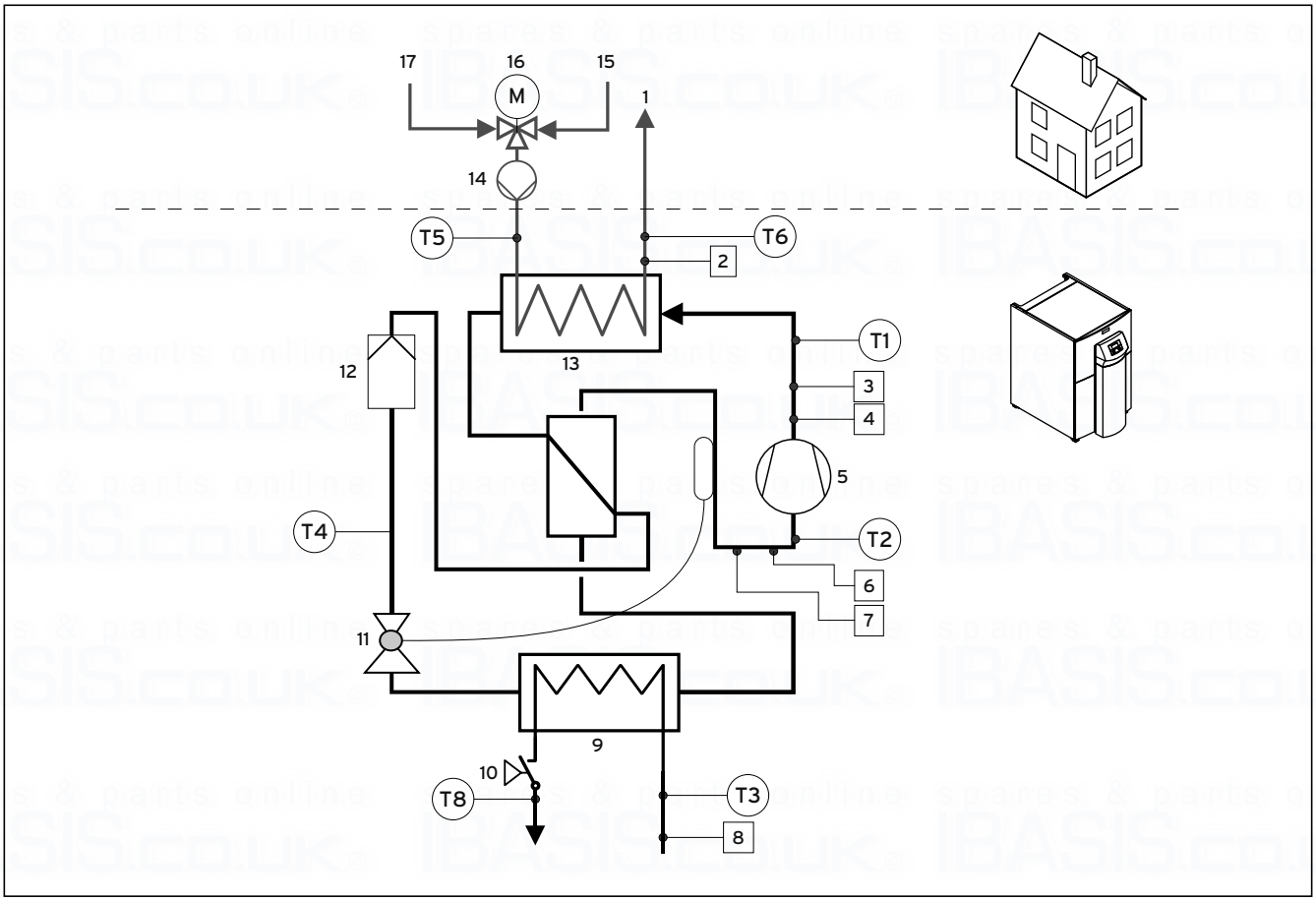

17.2 Appendix, Heat pump scheme VWW ..0/2

Key

1 Heating supply line
2 Heating circuit pressure sensor
3 High pressure sensor
4 High pressure switch
5 Compressor
6 Low pressure sensor
7 Low pressure switch
8 Heat source circuit pressure sensor
9 Evaporator
10 Flow switch
11 Expansion valve
12 Filter drier
13 Condenser
14 heating circuit pump (to be fitted on-site)
15 Heating return line
16 3-way heating/cylinder charging diverter valve (to be fitted on-site)
17 DHW return line

Electrical circuit diagram - VWS

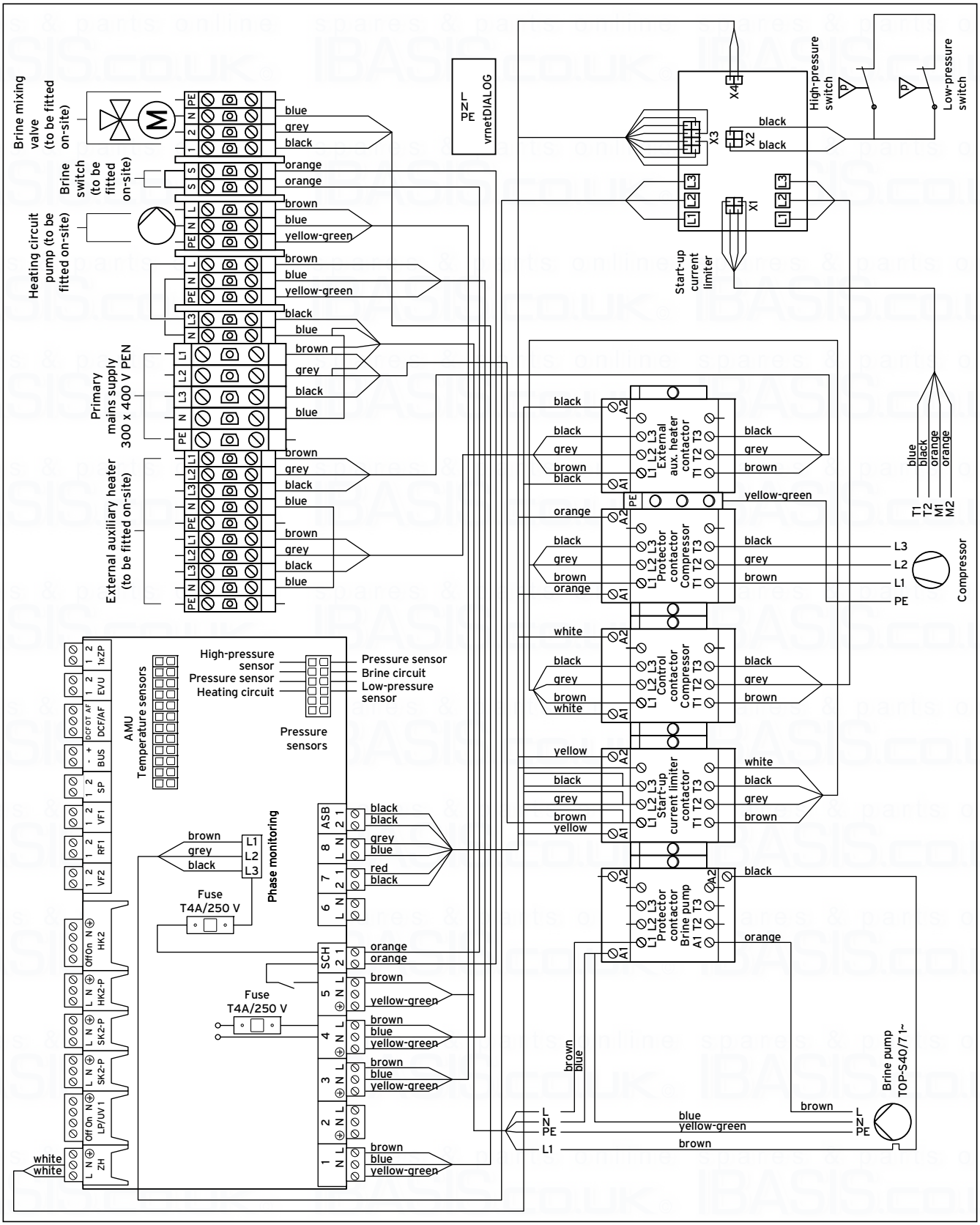

17.3 Appendix, Electrical circuit diagram VWS 220/2 - VWS 300/2

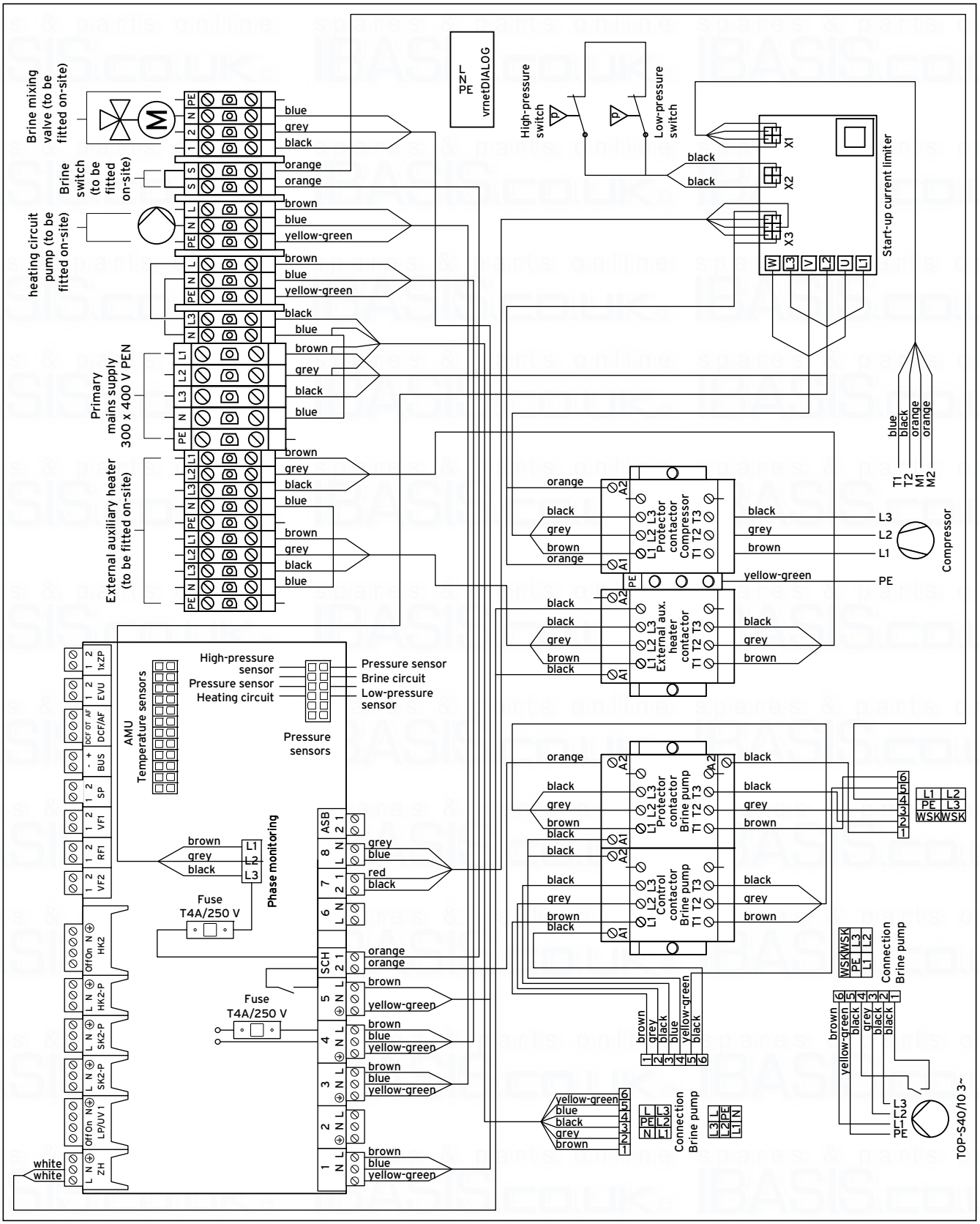

17.4 Appendix, Electrical circuit diagram VWS 380/2 - VWS 460/2

Electrical circuit diagram - VWW

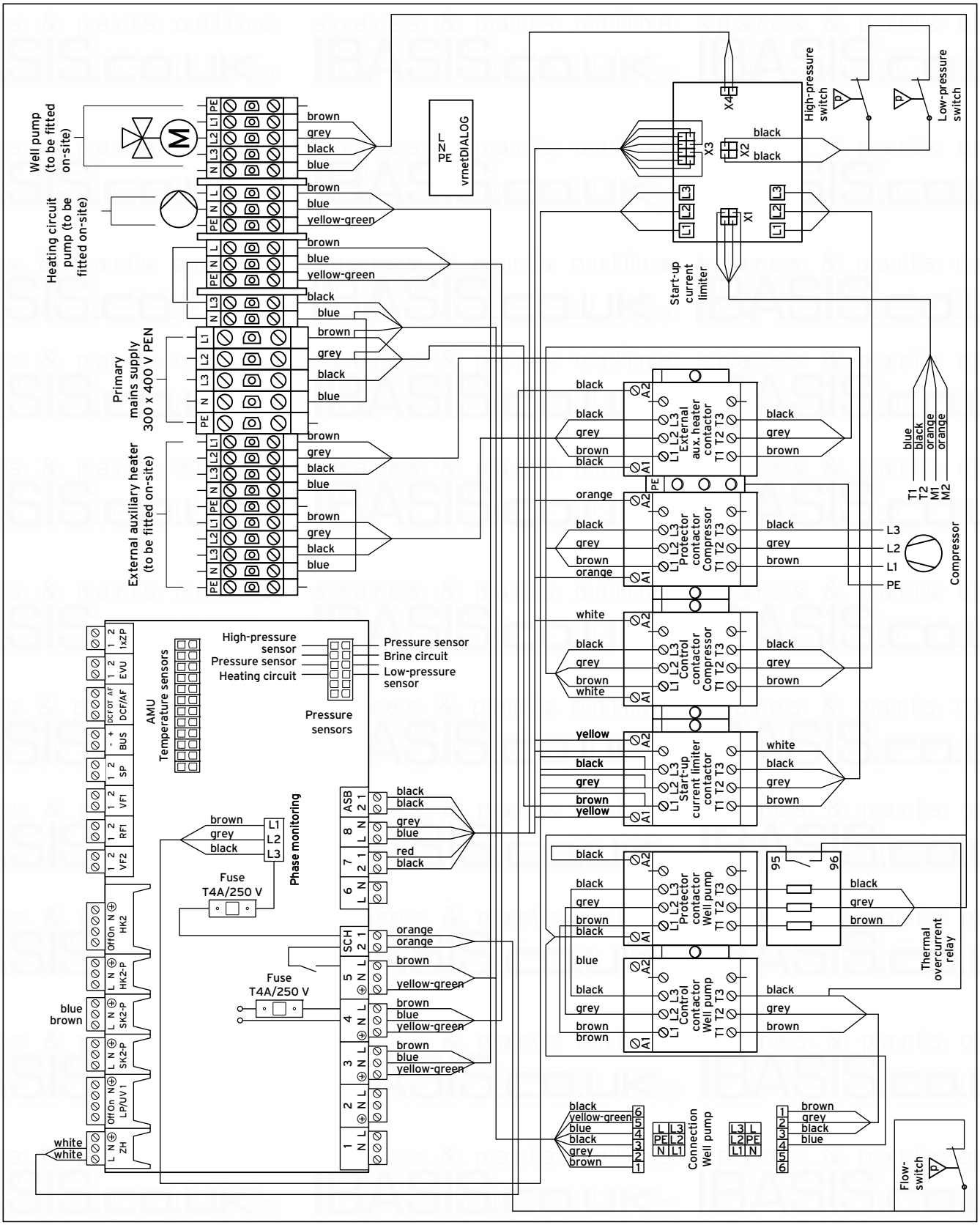

17.5 Appendix, Electrical circuit diagram VWW 220/2 - VWW 300/2

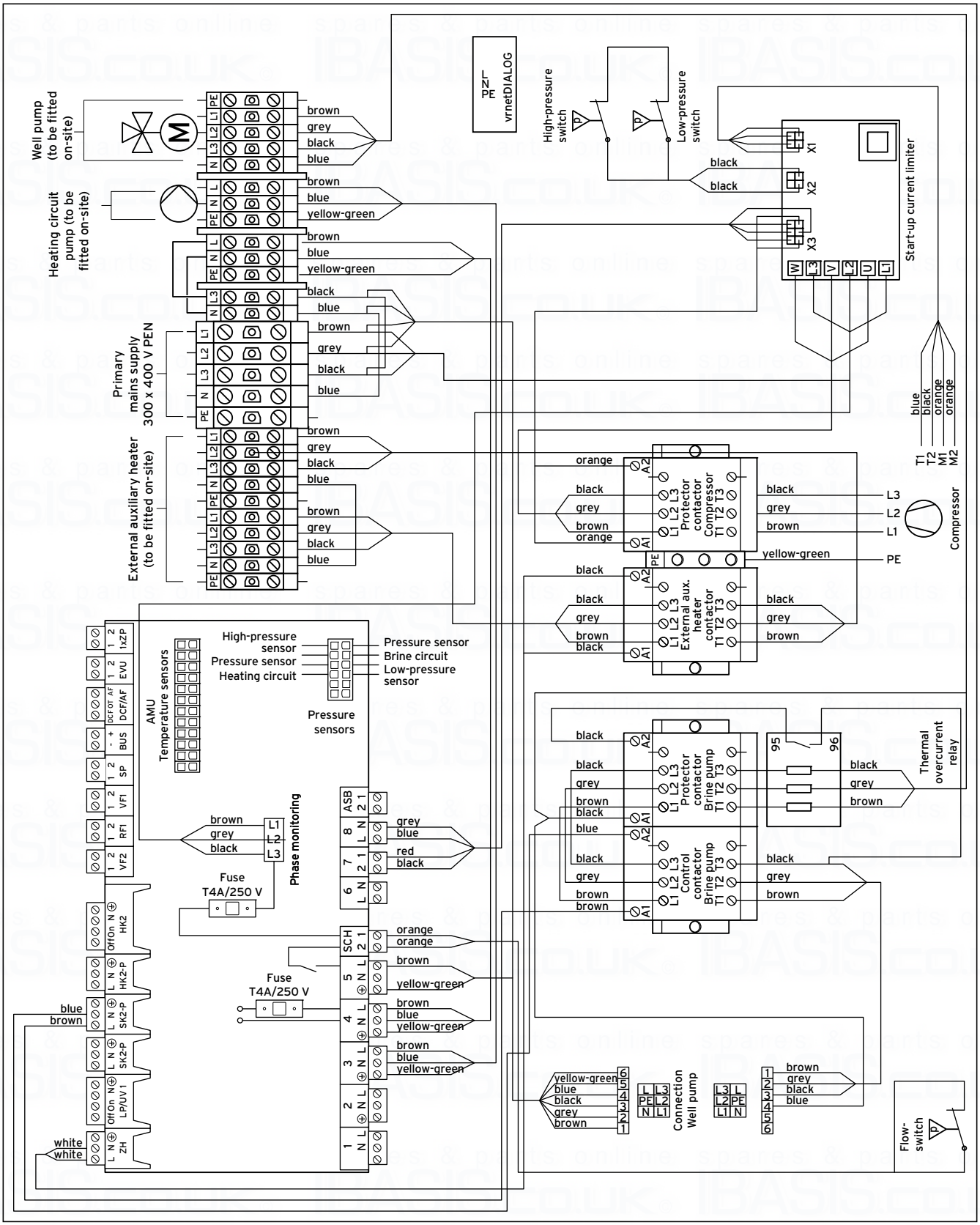

17.6 Appendix, Electrical circuit diagram VWW 380/2 - VWW 460/2

Index

A

Additional functions 69
Alignment 22
Article number 9
Assemblies 12

B

Blocking error
  Reset 87
Brine expansion tank 35
Brine Switch 55

C

CE label 5
Connection pipework 23
Connections 11

D

Data badge 9
Design 11
diagnosis
  Central Heating 84
  Coolant circuit 83, 84
  Heating circuit 85
  Heat source 85
Dimensions 16

F

Fernox 38
Frost protection
  Domestic hot water cylinder 69
  Emergency function 69
  Heating 69

G

Groundwater quality 14

H

Heating curve 77
Heating water
  Additives 38
  Quality 38

I

Information
  Error History 86
  Software version 86
  Statistics 86
Installation Assistent
  Cylinder type 80, 90
  Electric Wiring Diagram 88
  Freeze protect temp 90
  Hydraulic scheme 88
  Language selection 88
Installation clearances 17
Installation requirements 14
Installation space 14
Installer level 75

L

Limit thermostat 55

M

Mains supply 47

O

Outside temperature switch-off threshold 77

P

Parameters
  Buffer tank 77
  Cooling 81
  Floor drying 80
  Heating installation 76
  Legionella protection 82
  Solar tank 82
  VR 60 78
  VR 90 79

S

Safety instructions 6
Scale drawing 16
Scope of delivery 18
Sentinel 38
Symbols used 4

T

Transport lock 19
Type designation 4

W

water hardness 38
Well water quality 14

spares & parts online
IBASIS.CO.UK

spares & parts online IBASIS.CO.UK

Supplier

Vaillant Ltd
Nottingham Road ▮ Belper ▮ Derbyshire ▮ DE56 1JT
Telephone 0845 602 2922 ▮ www.vaillant.co.uk ▮ info@vaillant.co.uk

Manufacturer

Vaillant GmbH
Berghauser Str. 40 ▮ D-42859 Remscheid ▮ Telefon 0 21 91/18-0
Telefax 0 21 91/18-28 10 ▮ www.vaillant.de ▮ info@vaillant.de

0020051574_03 GB 122011 – Subject to change