For the heating engineer

Installation instructions

geoTHERM

Heat pump

vws/vww

GB

spares & parts online IBASIS.CO.UK

Contents

1 Notes on the documentation ... 3
1.1 Storage of the documents ... 3
1.2 Symbols used ... 3
1.3 Applicability of the manual ... 4
1.4 CE label ... 4
1.5 Intended use ... 4

2 Description of the appliance ... 5
2.1 Data badge ... 5
2.2 Functional principle ... 6
2.3 Design of the heat pump ... 7
2.3.1 Component groups - VWS ... 8
2.3.2 Component groups - VWW ... 9
2.4 General notes on operating modes and functions ... 9

3 Safety instructions and regulations ... 10
3.1 Safety instructions ... 10
3.2 Regulations, rules, guidelines ... 11
3.2.1 Preliminary remarks for room sealed appliances ... 11
3.2.2 Related documents ... 11
3.3 Coolant ... 11

4 Assembly and installation ... 12
4.1 Accessories ... 12
4.2 Requirements of the installation site ... 12
4.3 Dimensions and clearances ... 13
4.4 Assembly/Installation at a glance ... 14
4.5 Preparatory work in the installation area ... 14
4.6 Requirements of the heating circuit ... 15
4.7 Scope of delivery ... 15
4.8 Unpacking the unit and checking the delivery ... 16
4.9 Transporting the heat pump ... 16
4.10 Installing the heat pump ... 17
4.11 Removing the cladding ... 18
4.12 On-site installation ... 19
4.12.1 Assembly of the heating system ... 20
4.12.2 Assembly of the brine circuit (VWS only) ... 20
4.12.3 Assembly of the well system (VWW only) ... 21
4.13 Fitting the VRC DCF outside temperature sensor ... 21
4.14 Fitting the VR 90 remote control unit ... 21
4.15 Installing the VR 60 mixer module ... 21

5 Filling the heating and heat source systems ... 21
5.1 Filling the heating circuit ... 21
5.2 Filling the brine circuit (VWS only) ... 22
5.3 Well system (VWW only) ... 23

6 Electrical installation ... 24
6.1 Safety and installation information ... 24
6.2 Regulations pertaining to electrical installations ... 24
6.3 Electrical control box ... 25
6.4 Connecting the power supply ... 25
6.4.1 Unblocked mains supply (Electroplan 1) ... 26
6.4.2 Dual circuit feed, heat pump tariff (Electroplan 2) ... 27
6.4.3 Dual circuit feed, special tariff (Electroplan 3) ... 28
6.4.4 Connecting external components ... 29
6.5 Connecting the start-up current limiter (accessory) ... 29
6.6 Controller PCB at a glance ... 30
6.7 Wiring the controller PCB ... 31
6.7.1 Connecting the VR 10 standard sensor ... 31
6.7.2 Direct heating operation (Hydraulic plan 1) ... 32
6.7.3 Mixer circuit with buffer cylinder (Hydraulic plan 2) ... 33
6.7.4 Direct heating operation and domestic hot water cylinder (Hydraulic plan 3) ... 34
6.7.5 Mixer circuit with buffer cylinder and domestic hot water cylinder (Hydraulic plan 4) ... 35
6.7.6 Cooling ... 36
6.8 Connecting the DCF receiver ... 36
6.9 Connecting accessories ... 36
6.9.1 Installing the VR 90 remote control unit ... 36
6.9.2 Connecting further mixer circuits ... 37
6.9.3 Connecting vrnetDIALOG ... 37
6.10 Connecting an external boiler ... 38
6.11 Fitting the cladding and the operating panel ... 38

7 Start-up ... 41
7.1 General points regarding start-up ... 41
7.2 Operating the controller ... 41
7.2.1 Finding your way around the controller ... 41
7.2.2 Calling up the screens ... 42
7.3 Carrying out the initial commissioning ... 42
7.4 Bleeding the brine circuit (VWS only) ... 43
7.5 Bleeding the heating circuit ... 43
7.6 Handing the system over to the operator ... 43

8 Controller ... 44
8.1 Operating modes and functions ... 44
8.2 Automatic auxiliary functions ... 44
8.3 Settable auxiliary functions ... 45
8.3.1 Auxiliary functions in the Operator Level: ... 45
8.3.2 Auxiliary functions in the Code Level: ... 45
8.3.3 Auxiliary functions via vrDIALOG: ... 46
8.4 Description of the controller ... 46
8.4.1 Possible system circuits ... 46
8.4.2 Energy balance control ... 46
8.4.3 Buffer cylinder charging principle ... 47
8.4.4 Resetting to factory settings ... 47
8.4.5 Controller organisation ... 47
8.5 Operator level sequence diagram ... 48
8.6 Code level sequence diagram ... 49
8.7 Displays in the operator level ... 51
8.8 Displays in the code layer ... 56
8.9 Installer Menu ... 64

8.10 Parameters that can be set with vrDIALOG 810/2 ... 66

9 Inspection and maintenance ... 68
9.1 General notes ... 68
9.2 Inspection work to be performed ... 68
9.3 Servicing and repairs ... 68
9.4 Test operation and restarting ... 68

10 Troubleshooting and diagnostics ... 68
10.1 Error messages on the controller ... 68
10.2 Malfunctions of eBUS components ... 69
10.3 Displays in the error memory and under "Warning message" ... 69
10.4 Temporary shut-down ... 70
10.5 Blocking error ... 72
10.6 Other errors/malfunctions ... 74

11 Recycling and disposal ... 75
11.1 Appliance ... 75
11.2 Packaging ... 75
11.3 Coolant ... 75

12 Customer service and guarantee ... 75
12.1 Vaillant warranty ... 75
12.2 Vaillant Service ... 75

13 Technical data ... 76
13.1 Technical data - VWS ... 76
13.2 Technical data - VWW ... 77

14 Start-up checklist ... 79

15 Reference ... 81

Appendix ... 84
Sensor characteristics ... 84
VRC-DCF outside temperature sensor ... 85
Heat pump schematic - VWS ... 86
Heat pump schematic - VWW ... 87
Electrical circuit diagram - VWS ... 88
Electrical circuit diagram - VWW ... 89

1 Notes on the documentation

The following notes are intended as guidance throughout the entire documentation.
Further documents apply in combination with this installation manual.
We accept no liability for any damage caused by failure to observe these instructions.

Other applicable documents
Installation manual for the Start-up Current Limiter VWZ 30/2 SV No. 0020057445
Installation instructions for the VPA Multicylinder No. 0020051599
Installation instructions for the VDH Double Wall Storage Tank No. 0020051594
Installation manual for vrnetDIALOG No. 839189

The manuals for any accessories and controllers used also apply.

1.1 Storage of the documents

Please pass this installation manual and all other valid documents on to the owner of the installation in order for him or her to store it so that it is available whenever it is required.

1.2 Symbols used

Please observe the safety instructions in this installation manual for the installation of the appliance.

Danger!
Immediate risk of serious injury or death

Danger!
Danger of death by electric shock!

Danger!
Danger of burning and scalding!

Caution!
Potentially dangerous situation for the product and environment.

Note!
Useful information and instructions

- Symbol for a necessary task

1.3 Applicability of the manual

These installation instructions apply exclusively to appliances with the following part numbers:

Type name	Article number
Brine/Water Heat Pumps	
VWS 61/2	0010002778
VWS 81/2	0010002779
VWS 101/2	0010002780
VWS 141/2	0010002781
VWS 171/2	0010002782
Water/Water Heat Pumps	
VWW 61/2	0010002789
VWW 81/2	0010002790
VWW 101/2	0010002791
VWW 141/2	0010002792
VWW 171/2	0010002793

Table 1.1 Type designations and article numbers

The part number of the equipment can be taken from the identification plate.

1.4 CE label

With the CE mark, we confirm as equipment manufacturers that the appliances in the geoTHERM range satisfy the basic requirements of the following Directives:

- Electromagnetic Compatibility Directive (Council Directive 89/336/EEC)
- Low voltage directive (73/23/EEC)
- EN 14511 (heat pumps with electrically-driven compressors for heating, specifications for appliances for space heating and for warming drinking water)
- EN 378 (safety and environmentally related specifications for refrigerating systems and heat pumps)

1.5 Intended use

Valliant geoTHERM heat pumps are state-of-the-art appliances which are designed in accordance with recognised safety regulations. Nevertheless, there is still a risk of death or serious injury to the user or others or of damage to the device and other property in the event of improper use or use for which it is not intended.
This unit is not intended for use by persons (including children) having limited physical, sensory or mental capacities or who have inadequate experience and/or knowledge, unless they are supervised by a person responsible for their safety or have been given instructions by him regarding the operation of the unit.
Children must be supervised to ensure that they do not play with the unit.

The units are intended as heat generators for closed hot-water central heating installations, for cooling operation and for hot water generation. Any other use or extended use is considered to be improper. The manufacturer or supplier is not liable for any resulting damage. The user alone bears the risk.
The appliances are intended for operation on a power supply network with a system impedance Z_{max} at the transfer point (house connection) of 0.16 ohms maximum. With larger system impedances, the VWZ 30/2 SV start-up current limiter (Part No. 0020025744) must be fitted to the heat pump.
Intended use includes the observance of the installation manual.

Caution!
Any improper use is forbidden.

The appliances must be installed by a heating engineer, who is responsible for adhering to the existing regulations, rules and guidelines.

2 Description of the device

2.1 Data badge

An identification plate is attached to the baseplate on the inside of the geoTHERM heat pump. The type designation is located at the top of the grey pillar frame.

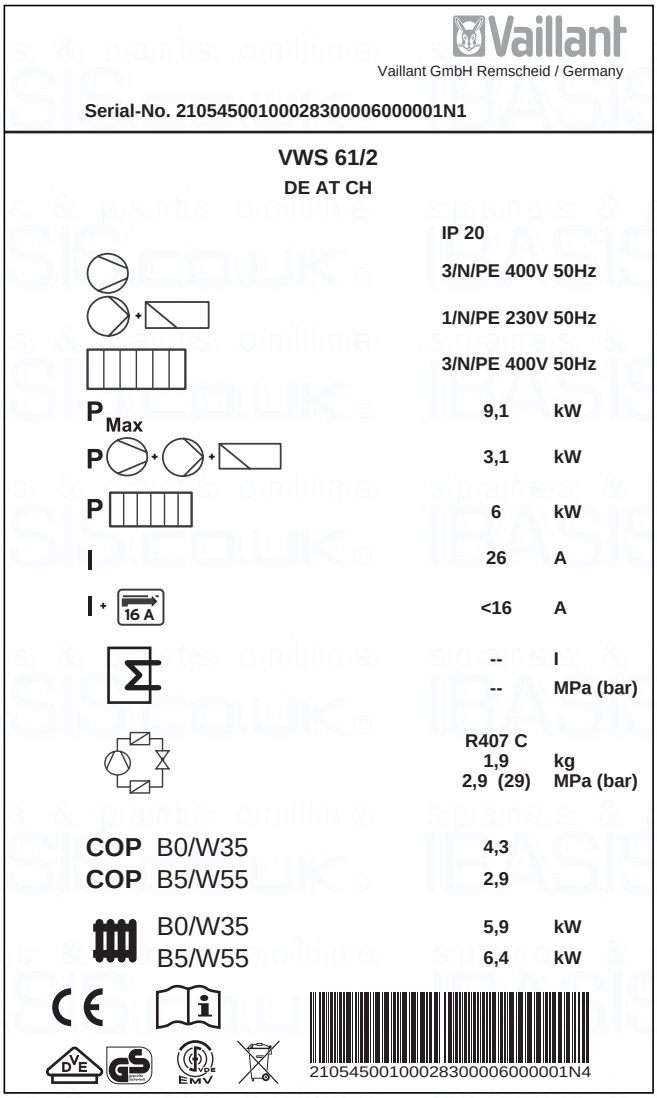

Fig. 2.1 Example of an identification plate

Explanation of the symbols on the identification plate

	Rated voltage - compressor
+	Rated voltage - pumps + controller
	Rated voltage - auxiliary heating
P_{Max}	Rated maximum power
P + +	Rated power - compressor, pumps and controller
P	Rated power - auxiliary heating
I	Start-up current without start-up current limiter
I + 16 A	Start-up current with start-up current limiter
Σ	Service water tank capacity
	Permissible rated overpressure
	Coolant type
	Filling quantity
	Permissible rated overpressure
COP B0/W35	Performance figure at a brine temperature of 0 °C and a heating flow temperature of 35 °C
COP B5/W55	Performance figure at a brine temperature of 5 °C and a heating flow temperature of 55 °C
B0/W35	Heating output at a brine temperature of 0 °C and a heating flow temperature of 35 °C
B5/W55	Heating output at a brine temperature of 5 °C and a heating flow temperature of 55 °C
CE	CE mark
DVE GS	VDE/GS mark
	Read the Operating and Installation Manual!
IP 20	Humidity protection class
	Ensure proper disposal at the end of its useful life (not household waste)
2105450010002830000600001N4	Serial Number

Table 2.1 Explanation of symbols

2.2 Functional principle

Heat pump systems consist of separate circuits in which liquids or gases transport the heat from the heat source to the heating system. As these circuits operate with differing media (brine/water, coolant and heating water), they are coupled to one another by means of heat exchangers. In these heat exchangers the heat passes from a medium at a high temperature to a medium at a lower temperature.

The Vaillant geoTHERM heat pump can be supplied from different heat sources such as, e.g. geothermal heat (geoTHERM VWS) or ground water (geoTHERM VWW).

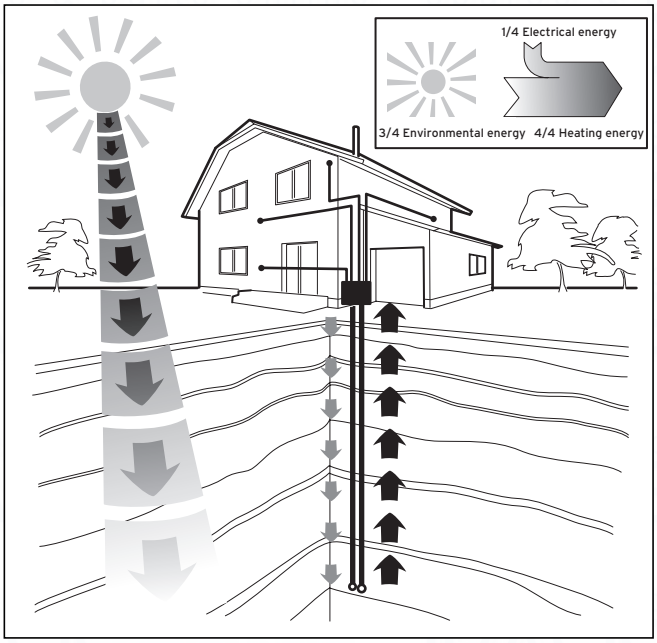

Fig. 2.2 Using geothermal heat as a heat source

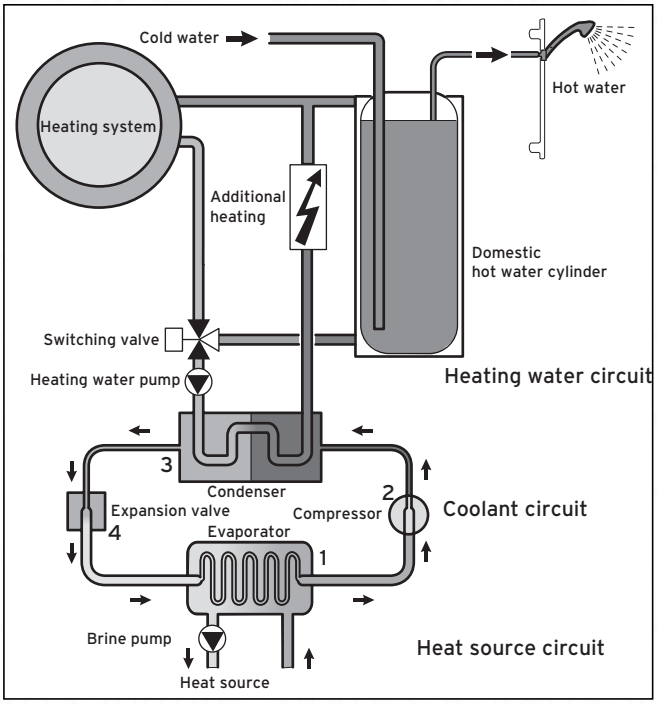

Fig. 2.3 Principle of operation of the heat pump

The system consists of separate circuits which are coupled to one another by means of heat exchangers. These circuits are:

- The heat source circuit, by means of which the energy from the heat source is transported to the coolant circuit.
- The coolant circuit, which releases its heat to the heating water circuit by means of evaporation, compression, liquefaction and expansion.
- The heating water circuit, which supplies the heating and the hot water generation for the domestic hot water cylinder.

The coolant circuit is connected by means of the evaporator (**1**) to the environmental heat source, from which it extracts thermal energy. At the same time, the physical state of the coolant changes; it evaporates. The coolant circuit is connected by means of the condenser (**3**) to the heating system, to which it releases the heat again. In so doing, the coolant becomes liquid again; it condenses.

As thermal energy can only pass from a body at a higher temperature to a body at a lower temperature, the coolant in the evaporator must have a lower temperature than the environmental heat source. On the other hand, the temperature of the coolant in the condenser must be higher than that of the heating water in order to be able to release the heat to it.

These different temperatures are produced in the coolant circuit by means of a compressor (**2**) and an expansion valve (**4**), which are situated between the evaporator and the condenser. The coolant flows in vapour form from the evaporator into the compressor, where it is compressed. This causes the pressure and temperature of the coolant vapour to rise sharply. After this process it flows through the condenser, where it releases its heat to the heating water by condensation. It flows as a liquid to the expansion valve, where it expands significantly and in so doing loses much of its pressure and temperature. This temperature is now lower than that of the brine which flows through the evaporator. The coolant can thus take up more heat in the evaporator, turning into vapour in the process and flowing to the compressor. The cycle starts again.
If required, the electric auxiliary heating can be switched in by means of the integrated controller.
To prevent the formation of condensate in the interior of the unit, the pipes of the heat source circuit and the coolant circuit are insulated. Should condensate appear, however, it is collected in a pan inside the unit (see Fig. 2.7) and fed away underneath it. Drop formation under the unit is thus possible.

2.3 Design of the heat pump

The Vaillant geoTHERM heat pump is available in the versions listed below. The versions differ principally in their output.

Type name	Heating output (kW)
Brine/Water Heat Pumps (B0/W35)	
VWS 61/2	5.9
VWS 81/2	8.0
VWS 101/2	10.4
VWS 141/2	13.8
VWS 171/2	17.3
Water/Water Heat Pumps (W10/W35)	
VWW 61/2	8.2
VWW 81/2	11.6
VWW 101/2	13.9
VWW 141/2	19.6
VWW 171/2	24.3

Table 2.2 Type summary

You can read the type designation of the heat pump from the sticker (see Fig. 2.4, Item **1**) on the pillar frame. The heat pump is designed to implement all current electrical supply tariffs.

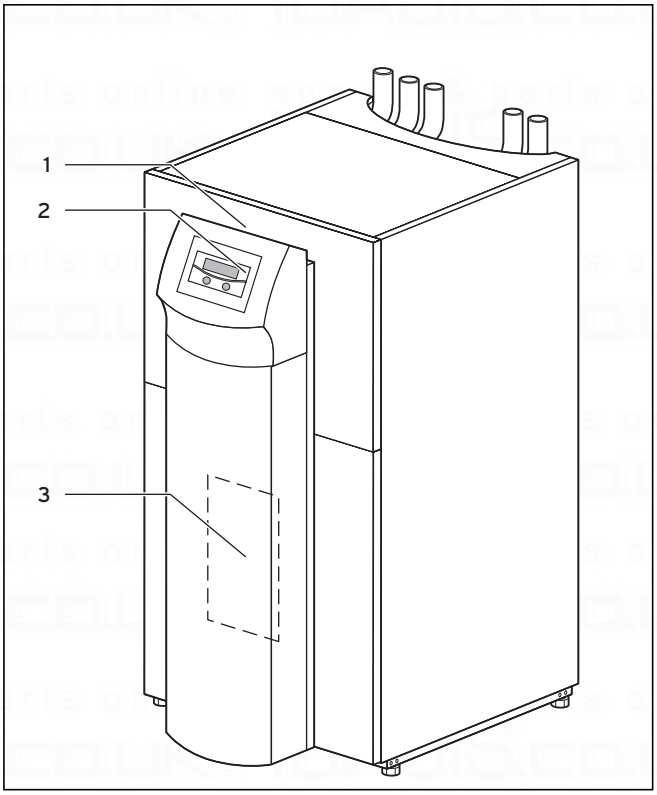

Fig. 2.4 Front view VWS/VWW

Key to Fig. 2.4
1 Label with heat pump type designation
2 Operating panel
3 vrnetDIALOG mounting plate (behind the pillar cladding)

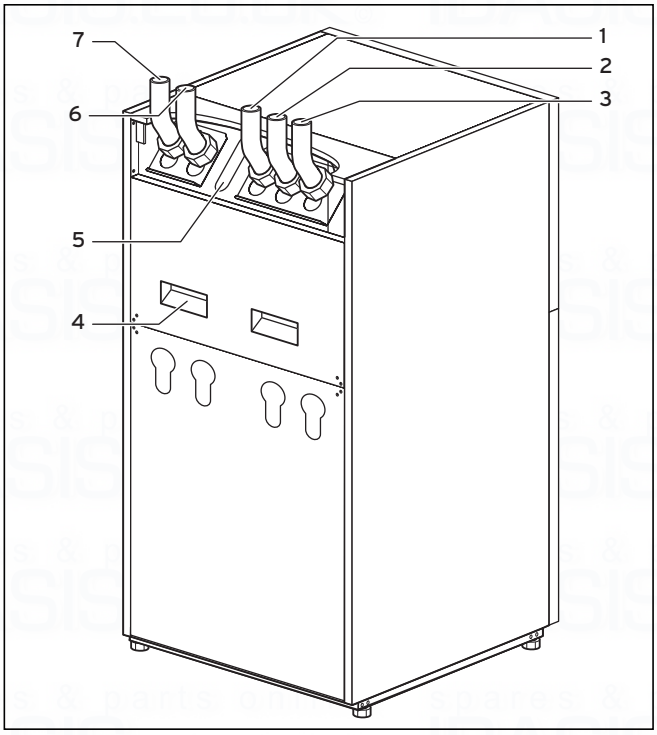

Fig. 2.5 Rear view VWS/VWW

Key to Fig. 2.5
1 Return to domestic hot water cylinder
2 Heat source to the heat pump
3 Heat source from the heat pump
4 Transportation handles
5 Cable feedthrough for electrical connections
6 Heating return
7 Heating feed

2.3.1 Component groups - VWS

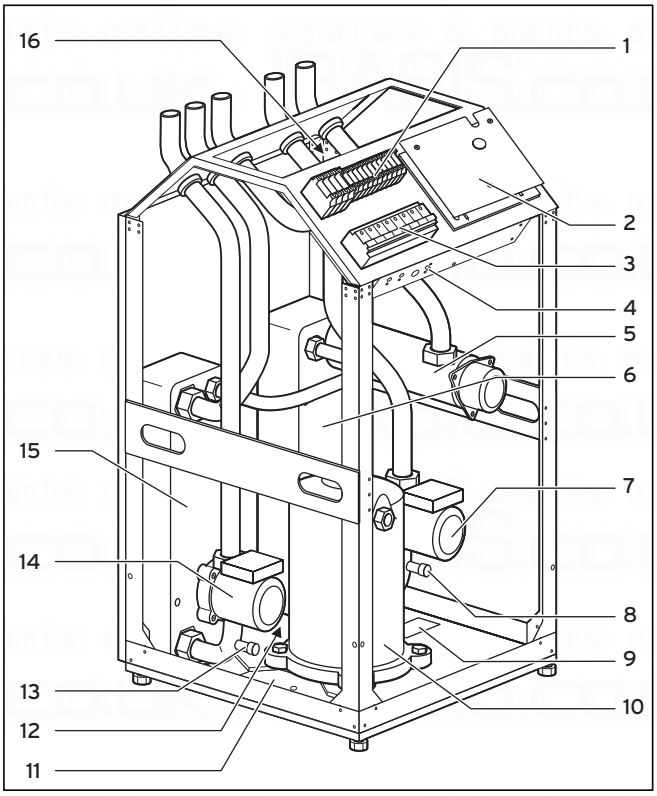

Fig. 2.6 VWS - Front view, covers removed

Key to Fig. 2.6
1 Electrical connections
2 Controller PCB (under cover plate)
3 Contactors
4 Safety thermostat STL for the auxiliary heating
5 Electric auxiliary heating
6 Condenser
7 CH pump
8 Fill/drain valve for heating circuit
9 Identification plate
10 Compressor
11 Condensate pan
12 Expansion Valve
13 Fill/drain valve for brine circuit
14 Brine pump
15 Evaporator
16 3-way valve

2.3.2 Component groups - VWW

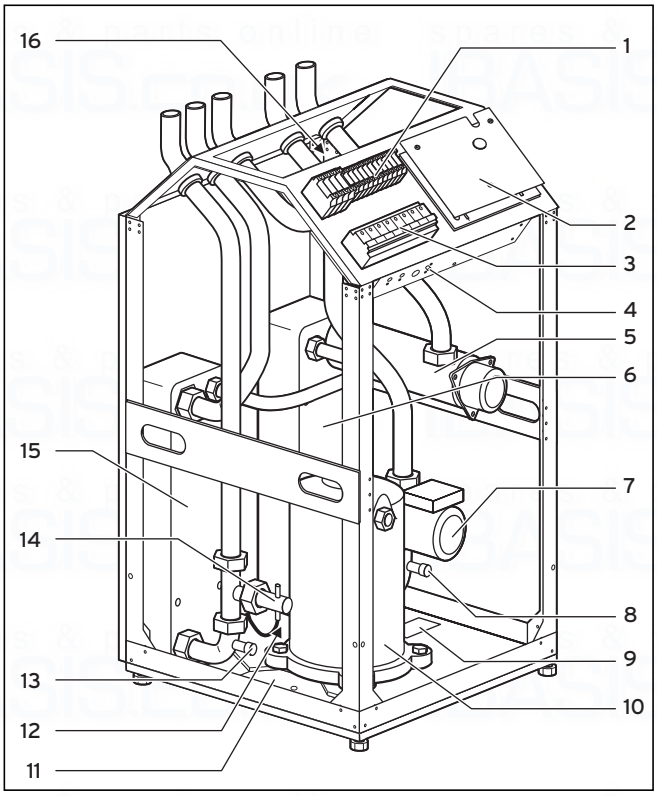

Fig. 2.7 VWW - Front view, covers removed

Key to Fig. 2.7
1 Electrical connections
2 Controller PCB (under cover plate)
3 Contactors
4 Safety thermostat STL for the auxiliary heating
5 Electric auxiliary heating
6 Condenser
7 CH pump
8 Fill/drain valve for heating circuit
9 Data badge
10 Compressor
11 Condensate pan
12 Expansion Valve
13 Fill/drain valve for coolant circuit
14 Flow switch for coolant circuit
15 Evaporator
16 3-way valve

2.4 General notes on operating modes and functions

There are five operating modes available for the heating circuit and these can be used for time and temperature control of the heat pump (see Chap. 8 "Control system").
There are a further three operating modes available for the integrated domestic hot water cylinder.
During start-up, you will tell the heat pump which of the connection configurations listed in the appendix corresponds to your installation by entering the number of the corresponding hydraulic plan into the controller.
Thus all the operating parameters will be set to predetermined values, so that the heat pump can work optimally. However, you can individually set and adapt the operating modes and functions afterwards.
You will find all the information on operating modes, auxiliary and special functions in Chapter 8, "Control system".

The heat pump is equipped with numerous **automatic auxiliary functions** to ensure trouble-free operation (see also Chap. 8.2 "Automatic auxiliary functions"):

- **Frost protection**
  Prevents the heating system from freezing
- **Tank frost protection**
  Prevents the connected tanks from freezing
- **Checking the external sensors**
  Checking the connected sensors during initial commissioning using the basic hydraulic circuit that was entered previously
- **Protection against loss of heating water**
  Shuts down when there is a loss of heating water and switches on again when there is sufficient water pressure
- **Pump blocking protection**
  Prevents seizing of pumps in the system
- **Protection against loss of brine**
  Shuts down if the brine pressure is too low and switches on again when the pressure is sufficient
- **Floor protection circuit**
  Overheating protection for the floor (important for wooden floors)
- **Phase monitoring**
  Compressor shut-down if 400 V supply faulty
- **Freeze protection function**
  Shuts down the compressor if the temperature of the heat source falls below a predetermined value

Additionally, there are further **settable auxiliary functions** available (see also Chap. 8.3 "Settable auxiliary functions"):

- **Timer programmes**
  To set the heating times for each heating circuit
- **Holiday programming**
  Programming of two holiday periods with date entry and set-back temperature
- **Party function**
  Carries the heating and hot water times forward to the next shut-off point
- **Energy saving function**
  Lowers the flow setpoint temperature for a presettable period
- **Cooling mode**
  The cooling mode allows you to use the heat pumps for cooling.
  Cooling mode is only possible when using the VWZ NC 14/17 accessory, and only for VWS 14 and VWS 17 heat pumps.
- **Screed floor drying**
  For drying out screed floors
- **Anti-Legionella function**
  Kills germs in the tank and in the pipes
- **Fixed value control**
  To set a fixed flow temperature via vrDIALOG
- **Remote maintenance**
  Diagnostics and setting via vrDIALOG or vrnetDIALOG

3 Safety instructions and regulations

3.1 Safety instructions

The heat pump must be installed by an approved technician, who will be responsible for adhering to the existing standards and regulations. We accept no liability for any damage caused by failure to observe these instructions. Find out the transport and operating weights of the heat pump from the Technical Data and take heed of them during transportation and installation. Pay particular attention to Chap. 4.2, "Requirements of the installation site", before assembly.

Danger!
The coolant circuit is pressurised. Furthermore, high temperatures can arise. The appliance may only be opened and serviced by Vaillant factory customer service or by a qualified specialist technician. Work on the coolant circuit may only be carried out by a qualified refrigeration engineer.

Danger!
Risk of electric shock!
Always switch off all power supplies before carrying out any electrical installation or servicing work. Make sure that they are secured against inadvertent switching on again.

Caution!
Risk of damage!
Do not add any antifreeze or corrosion protection agents to the heating water, as seals and other components can be damaged as a result and this can lead to water leaks.

Soften the heating water if the hardness is 3.0 mmol/l (21,05 °e) or greater. You can use the Vaillant Ion Exchanger (Part. No. 990 349) for this. Observe the enclosed instructions for use.

Caution! For VWW only:
Risk of damage to the heat pump.
The incoming ground water must be checked for quality to ensure that no damage occurs to the suction well, pipes or evaporator.

3.2 Regulations, rules, guidelines

3.2.1 Preliminary remarks for room sealed appliances

This appliance should only be installed in conjunction with either a Vaillant flue system or an alternative approved system (details of flue approval categories can be found in the technical section of the installation manual). Install the flue system as detailed in the separate flue installation instructions supplied with this boiler.

3.2.2 Related documents

The installation of the boiler must be in accordance with the relevant requirements of Gas Safety (Installation and Use) Regulations 1998, Health and Safety Document No. 635 (The Electricity at Work Regulations 1989), BS7671 (IEE Wiring Regulations) and the Water Supply (Water Fitting) Regulations 1999, or The Water Bylaws 2000 (Scotland). It should also be in accordance with the relevant requirements of the Local Authority, Building Regulations, The Building Regulations (Scotland), The Building Regulations (Northern Ireland) and the relevant recommendations of the following British Standards:
BS 6700: Services supplying water for domestic use within buildings and their curtilages.
BS 6798: Specification for installation of gas fired boilers not exceeding 60 kW input.
BS 6891: Specification for installation of low pressure gas pipework up to 28 mm (R1) in domestic premises (2nd family gas).
BS 7593: Treatment of water in domestic hot water central heating systems. Institute of Gas Engineers Publication IGE/UP/7/1998: "Guide for gas installations in timber framed housing"
BS. 5482 Pt. 1 Domestic butane and propane gas burning installations.
IGE/UP1 Soundness testing and purging of industrial and commercial gas installation.
IGE/UP2 Gas installation pipework, boosters and compressors on industrial and commercial premises.
IGE/UP10 Installation of gas appliances in industrial and commercial premises.
BS. 6644 Installation of gas fired hot water boilers of rated inputs between 60 kW and 2 MW (2nd and 3rd family gases).
BS. 5449 Forced circulation hot water central heating systems for domestic premises. Note: only up to 45 kW.
BS. 6880 Low temperature hot water heating systems of output greater than 45 kW.
Part 1 Fundamental and design considerations.
Part 2 Selection of equipment.
Part 3 Installation, commissioning and maintenance.
BS. 4814 Specification for: Expansion vessels using an internal diaphragm, for sealed hot water heating systems.
BS. 5440 Installation and maintenance of flues and ventilation for gas appliances of rated input not exceeding 70 kW net (1st, 2nd and 3rd family gases).
Part 1 Specification for installation of flues.
Part 2 Specification for installation and maintenance of ventilation for gas appliances.

3.3 Coolant

The heat pump is delivered with an operational filling of R 407 C coolant. This is a chlorine-free coolant which does not affect the Earth's ozone layer. R 407 C is neither a fire hazard nor an explosion risk.
However, maintenance work and interventions into the coolant circuit may only be undertaken by an expert technician with appropriate protective equipment.

Danger!
R 407 C coolant!
Do not inhale gases or vapours emanating from leaks in the coolant circuit. Risk to health! Avoid contact with the skin and eyes. Escaping coolant can cause freezing if the exit point is touched! R 407 C coolant presents no danger in normal use and under normal conditions. With improper use, however, it can cause injury and damage.

Caution!
This appliance contains the coolant, R 407 C. The coolant must not be allowed to escape into the atmosphere.
R 407 C is a fluorinated greenhouse gas covered by the Kyoto Protocol, with a GWP of 1653 (GWP = Global Warming Potential).
Before the appliance is disposed of, the coolant it contains must be completely drained into a suitable vessel so that it can then be recycled or disposed of in accordance with the regulations.
The relevant work in connection with the coolant may only be carried out by officially certified specialists.
Draining or filling with new coolant (see identification plate for quantity) may only be carried out via the service valves. All warranties become void if any approved replacement coolant other than the R 407 C recommended by Vaillant is used.

4 Assembly and installation

4.1 Accessories

Note!
Please see current price lists for information on possible necessary accessories.

You can fit the following accessories to expand the heat pump system. You can find more detailed information on the installation of accessories in Chap. 6.9.

Mixer module VR 60
With the mixer module, you can expand the control system of the heating installation by two mixer circuits. You can connect a maximum of six mixer modules.

VR 90 remote control unit
A separate remote control device can be connected for the first eight heating circuits (heat zone 1 - heat zone 8).

VR 10 standard sensor
Additional sensors may be required, e.g. as flow, return, collector or cylinder sensors, depending on the configuration of the system.

vrDIALOG 810/2
vrDialog is a communications unit with software and connecting cable which enables you to carry out diagnosis, monitoring and parameter setting on the heat pump from a computer.

vrnetDIALOG 840/2, 860/2
The vrnetDIALOG communications unit enables you to carry out remote diagnosis, monitoring and parameter setting on the heat pump from a computer over a telephone connection or via an integrated GSM modem.

Start-up current limiter VWZ 30/2 SV
The VWZ 30/2 SV is used to limit the short-term very high current consumption which occurs when the compressor starts up. This is recommended or stipulated by some power companies.

VPS heating water buffer cylinder
The VPS buffer cylinder is used as an intermediate cylinder for heating water and can be installed between the heat pump and the heating circuit. It provides the necessary to bridge over the power company blocking periods.

VIH and VDH domestic hot water cylinder
The Vaillant VIH coiled tube tank and the Vaillant VDH double wall tank are specially designed to be combined with heat pumps and are used for heating and storing hot water.

VPA combination cylinder
The Vaillant VPA combination cylinder can be fed from various energy sources and is used for heating both heating water and DHW.

VWZ compact collector
The VWZ ground collector system is used as a heat source with a small space requirement and simple, fast installation. It can only be combined with heat pump types VWS 81/2 and 101/2.

External cooling VWZ NC 14/17
With the VWZ external cooling accessory, you can also use the VWS 14 and VWS 17 heat pumps for cooling.

Other accessories
- Heat transfer fluid
- Filling pump
- Safety assembly and tundish
- Expansion vessel for the heating circuit

4.2 Requirements of the installation site

- Choose a dry room that is generally frost-proof.
- The floor must be level and sufficiently stable to be able to bear the weight of the heat pump, together with the DHW and possibly a buffer tank.
- It must be possible to install suitable pipe conduits (for heat source, DHW and heating).
- When choosing the installation site, bear in mind that when operating, the heat pump can transmit vibrations to the floor or nearby walls.
- In accordance with DIN EN 378 T1, the minimum size of the installation space for heat pumps, (V_{min}), is calculated as follows:
  $V_{min} = G/c$
  G = coolant fill quantity in kg
  c = practical limit in kg/m^3
  (for R 407C c = 0.31 kg/m^3)
  This yields the following minimum installation space:

Heat pump type	Coolant fill quantity [kg]	Minimum installation space [m^3]
VWS 61/2 VWW 61/2	1.9	6.1
VWS 81/2 VWW 81/2	2.2	7.1
VWS 101/2 VWW 101/2	2.05	6.6
VWS 141/2 VWW 141/2	2.9	9.4
VWS 171/2 VWW 171/2	3.05	9.8

Table 4.1 Minimum installation space

4.3 Dimensions and clearances

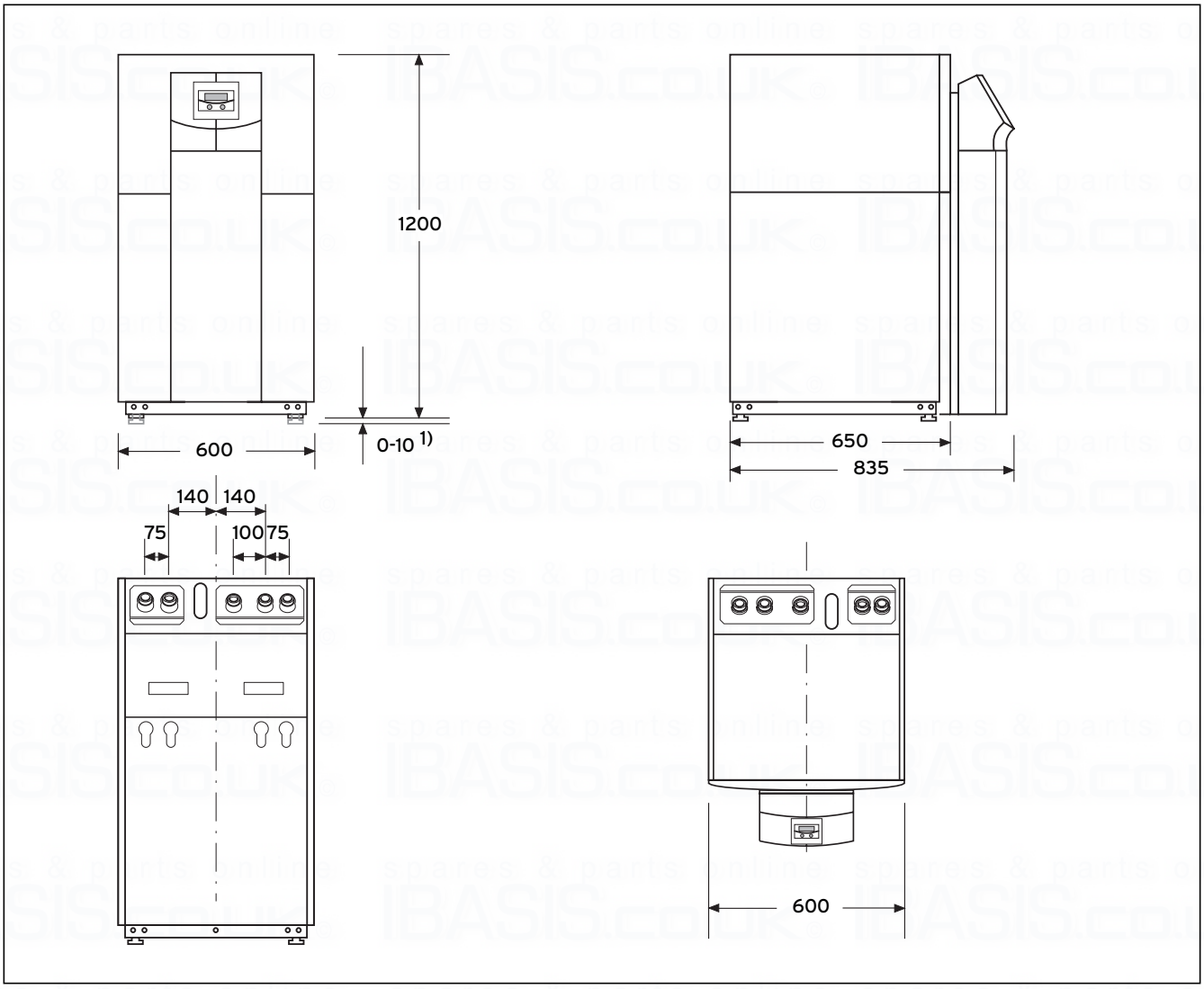

Fig. 4.1 Dimensions and clearances

[1] Adjustable feet adjustable in height by 10 mm

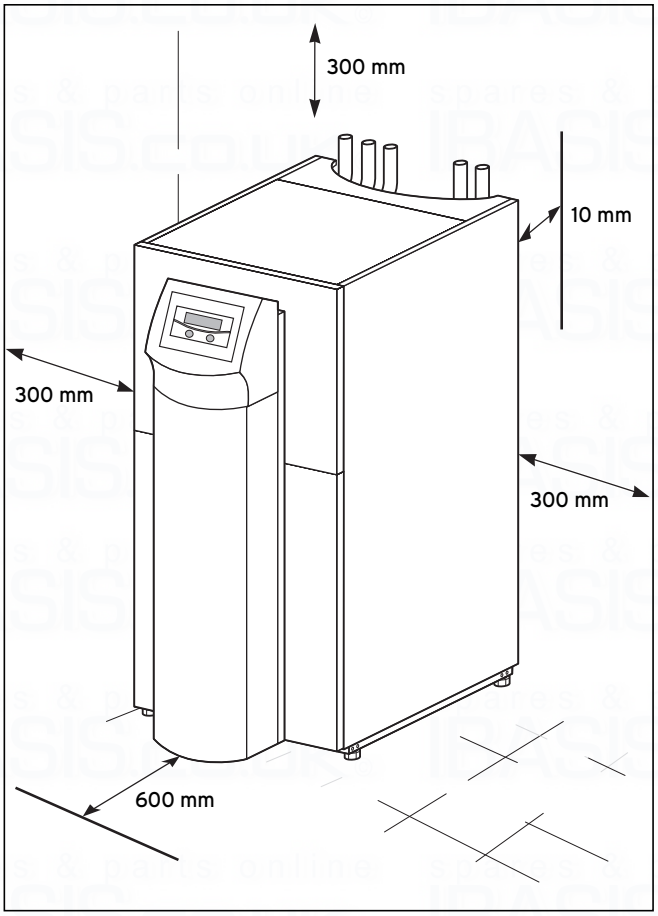

Fig. 4.2 Minimum clearances for installing the heat pump

4.4 Assembly/Installation at a glance

- Remove packing material.
- Remove transportation safety devices.
- Transport the heat pump to the installation area.
- Position and align the heat pump in the intended assembly location.
- Remove the upper cladding.
- Remove the front cladding.
- Connect the on-site piping.
- Carry out the electrical installation.
- Fill the heating circuit.
- Fill the heat source circuit.
- Fit the cladding.
- Fit the operating console.
- Carry out the initial commissioning.
- Fill out the start-up checklist.
- Hand over system to the user and familiarise him with it.

4.5 Preparatory work in the installation area

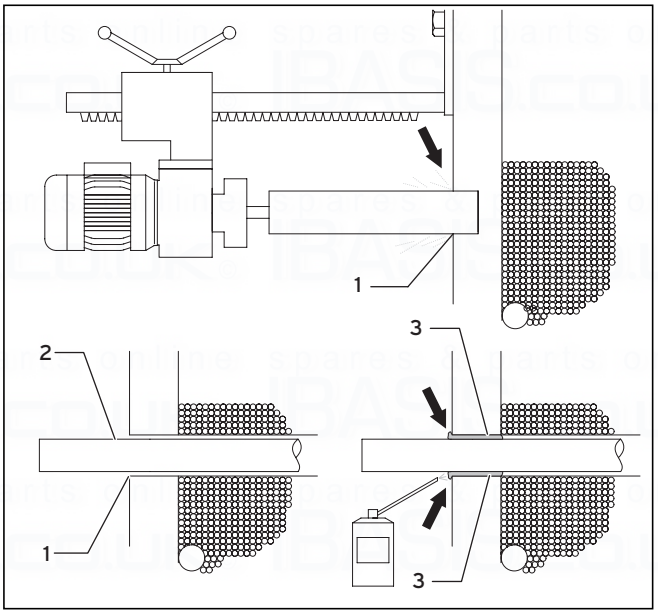

Fig. 4.3 Preparatory work in the installation area

- Make sure that the substrate is sufficiently stable (see Chap. 4.2 "Requirements for the installation site").
- Make at least two bore holes, bearing in mind the dimensions of the unit and its connections (**1**).
- Each pipe from the heat source requires its own bore hole.
- Special pipe feedthroughs must be used if there is a risk of ground water penetration (follow the manufacturer's instructions).
- Take account of the distances to the core barrels for the rest of the installation.
- Pass the heat source pipes (**2**) from the outside into the installation area.
- Lay the heat source pipes (**2**) centrally in the bore holes (**1**) to facilitate all-round thermal insulation.
- Seal the annular gap (**1**) as shown with foam insulation (e.g. PE foam) (**3**).
- Insulate the heat source pipes in cellar areas against vapour diffusion, as condensation will otherwise accumulate (pipe temperature can be as low as - 15 °C).

4.6 Requirements of the heating circuit

The heat pump is only suitable for connection to a closed central heating installation. To ensure trouble-free operation, the central heating installation must have been installed by authorised specialists in compliance with the applicable regulations.
A heat pump is suited to low temperature heating systems. The system must therefore be designed for low flow temperatures (ideally around 30 to 35 °C). Furthermore, it must be ensured that power company outages are bridged over.
EN 12828 requires the following the heating system installation:

- a filling valve, in order to fill the heating system with water or be able to drain the water,
- a diaphragm expansion vessel in the return line of the heating circuit,
- an overpressure safety valve (opening pressure 3 bar) with pressure gauge (safety group) in the flow line of the heating circuit, immediately after the appliance,
- an air/dirt separator in the return line of the heating circuit.

To avoid energy losses in accordance with the Energy Saving Order (EnEV) and to protect against freezing, all connection lines must be provided with thermal insulation.
The pipes must be dirt free - if necessary, flush them thoroughly before filling.

Caution!
Risk of damage!
Do not add any antifreeze or corrosion protection agents to the heating water, as seals and other components can be damaged as a result and this can lead to water leaks.

In hydraulic installations that are predominantly equipped with thermostatically or electrically controlled valves, it is necessary to ensure a constant, adequate flow through the heat pump. Regardless of the choice of heating system, the nominal flow rate of heating water must be ensured. This is guaranteed by a professionally installed buffer cylinder.

4.7 Scope of delivery

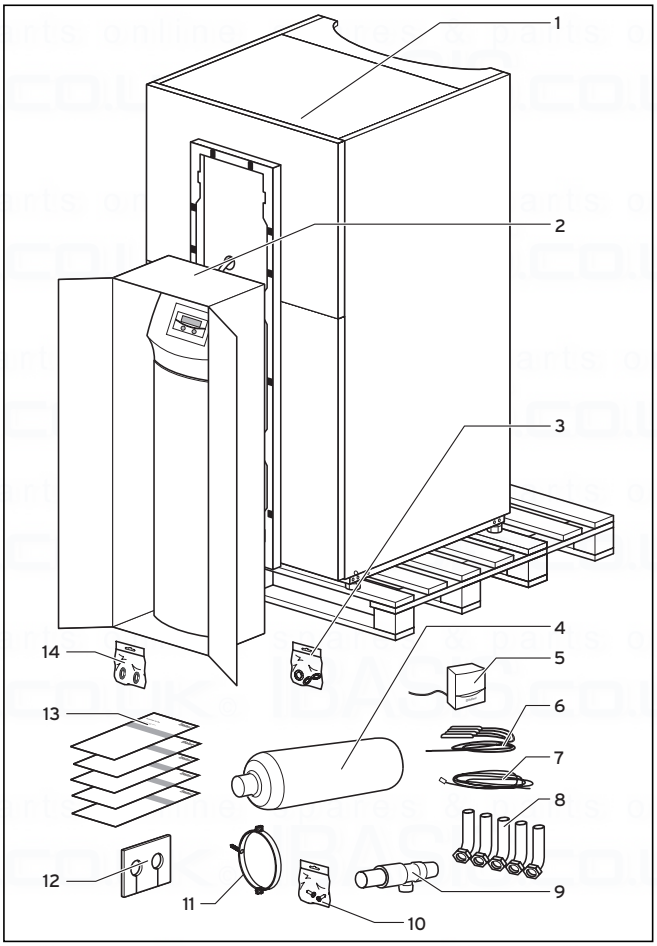

Fig. 4.4 Checking the supplied material

For key, see Table 4.2.

The heat pump is delivered on a pallet in two packing units.

- Check the heat pump and the separately packaged operating console for any transport damage.

Pos.	Amount	Description
1	1	Heat pump
2	1	Operating console, pillar cover
3	3 2 3 2	Gaskets (yellow/green) for heating circuit elbow unions M6 flat-headed screws for fitting the operating console to the frame (plus one spare screw) Self-tapping screws for the operating console frame (incl. one spare screw) Self-tapping screws for fastening the vrnetDIALOG unit
4	1	6 Litre brine expansion tank incl. brass adapter, max. 3 bar
5	1	VRC-DCF outside temperature sensor
6	4	VR 10 sensors
7	1	Control cable for vrnetDIALOG
8	5	45° connection elbow with cap nuts
9	1	Expansion relief valve for brine circuit, 1/2", 3 bar
10	1	Bag of small parts for fastening the brine expansion tank
11	1	Clamp for fastening the brine expansion tank
12	1	Insulation matting for heat source connection on the rear wall
13	5	Installation instructions, operating manual
14	2	Seals with metal support rings for heat source circuit connection elbows

Table 4.2 Scope of delivery

The frame for the operating console is already fastened to the heat pump casing on delivery.

4.8 Unpacking the unit and checking the delivery

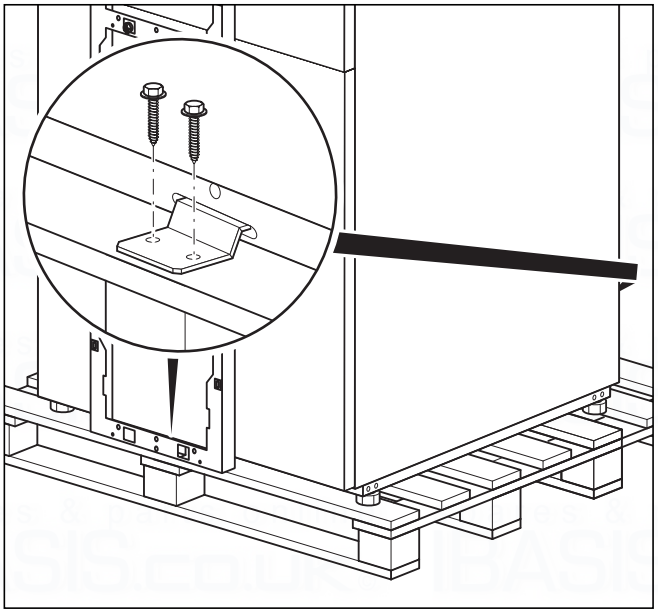

Fig. 4.5 Removing the transport securing device

- Carefully remove the packaging and padding, taking care not to damage any parts of the unit.
- Unfasten the transport securing devices (brackets) with which the heat pump is fixed to the pallet.

The brackets are no longer required.

4.9 Transporting the heat pump

The handles on the rear side of the unit are provided as transportation aids (see Fig. 2.5, Item. **4**).

Danger!
Risk of injury!
Depending on type, the heat pump weighs 140 - 195 kg in the unfilled state. To avoid injury, use several people to lift it.

Caution!
Risk of damage!
Regardless of the mode of transport, the heat pump must never be tilted by more than 45°. Otherwise it can cause malfunctions in the coolant circuit during later operation, which in the worst case can lead to a failure of the whole system.

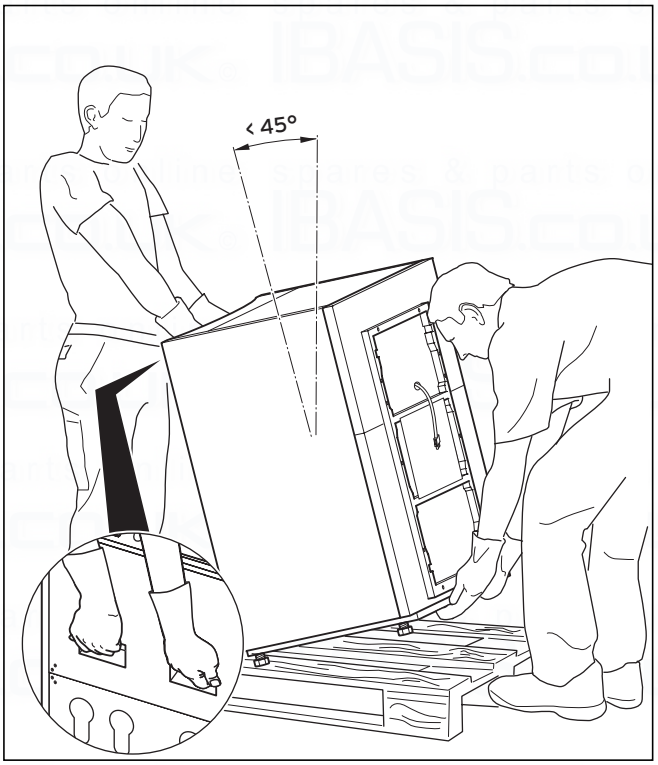

Fig. 4.6 Transporting the complete unit (carrying)

We recommend that the heat pump be transported with the aid of a suitable barrow.

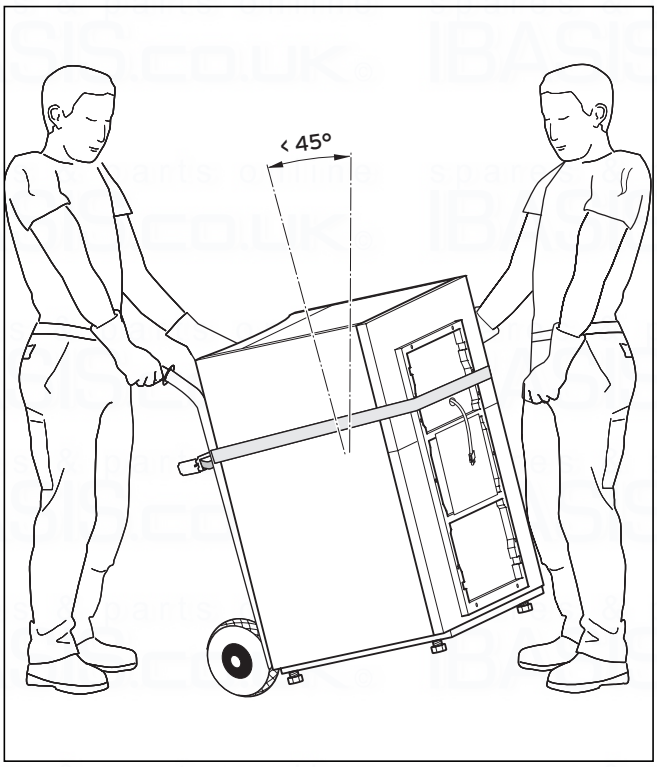

Fig. 4.7 Transporting the complete unit (barrow)

Caution!
Risk of damage!
Find out the weight of the heat pump from the Technical Data and make sure that the transportation method you select is appropriately constructed.

When using a barrow, take note:
- Only use the barrow on the **rear** side of the heat pump, as the weight distribution is then the most favourable.
- Fasten the heat pump with a restraining strap.
- Use a ramp when pushing the barrow from the pallet, e.g. a batten and a sturdy board.

4.10 Installing the heat pump

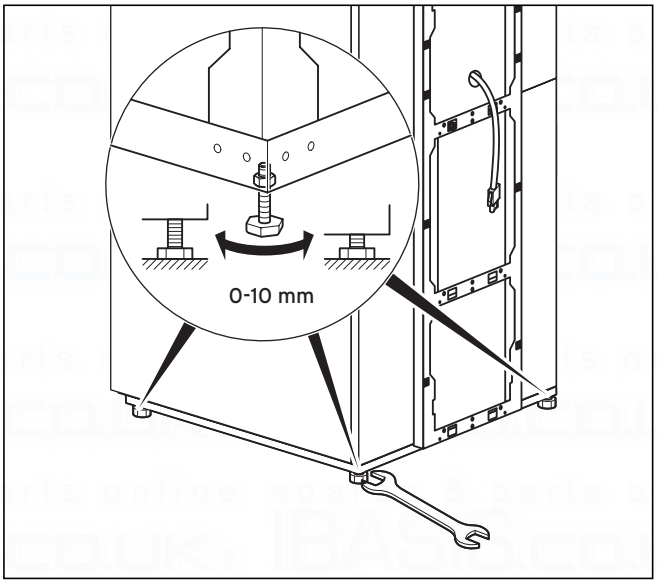

Fig. 4.8 Adjusting the feet

- Pay attention to the minimum wall clearances when installing the heat pump (see Fig. 4.2).
- Align the heat pump horizontally by adjusting the feet.

4.11 Removing the cladding

The cladding panels are screwed on and additionally provided with retaining clips.

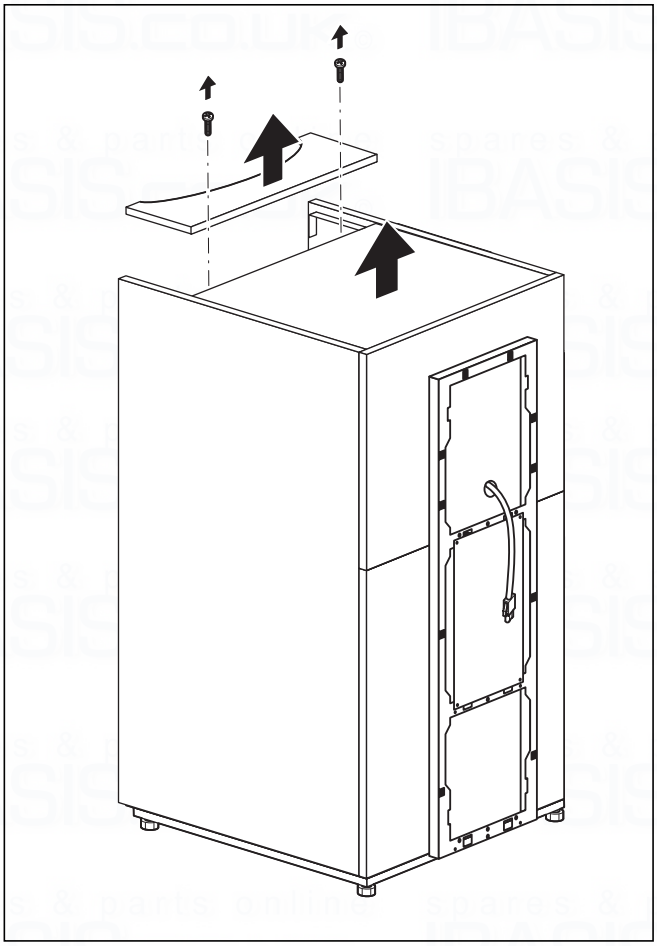

Fig. 4.9 Removing the upper cover

- Remove the pipe access cover, which is fastened with retaining clips, by pulling it gently upwards.
- Unfasten the screws for the upper cover which are concealed beneath it.
- Remove the upper cover in an upwards direction.

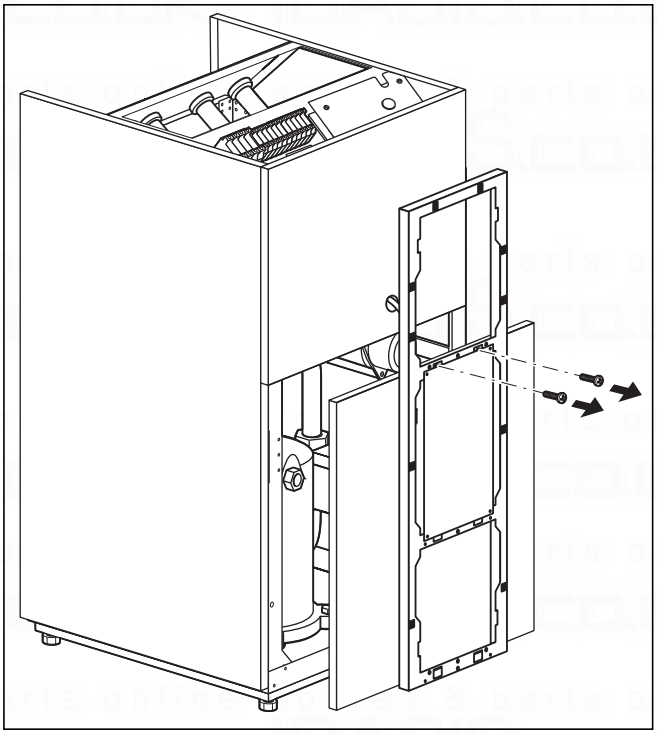

Fig. 4.10 Removing the front lower cladding

- Unfasten the two screws on the console frame and pull it, together with the front lower cladding, away from the casing.

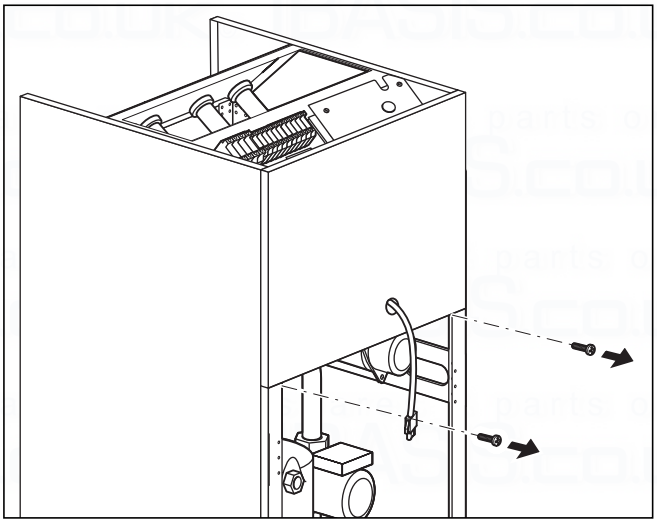

Fig. 4.11 Removing the front upper cladding

- Unfasten the two screws on the front of the front upper cladding and remove the cladding.

4.12 On-site installation

Caution!
Flush the heating system thoroughly before connecting the appliance!
By doing that, residue such as welds, cinder, hemp, putty, rust, rough dust and similar substances are removed from the pipes. Otherwise such substances can be deposited in the appliance and cause damage.

Caution!
To prevent leaks, take care that no mechanical stresses are created on the connection lines!

- The pipework installation must be carried out in accordance with the dimensional and connection drawings in Fig. 4.1.
- The installation must be performed by a specialist fitter.
- The applicable regulations must be observed during the installation.

Note!
Air in the heating system leads to impaired operation and reduces the heating output. Fit bleed valves as required.

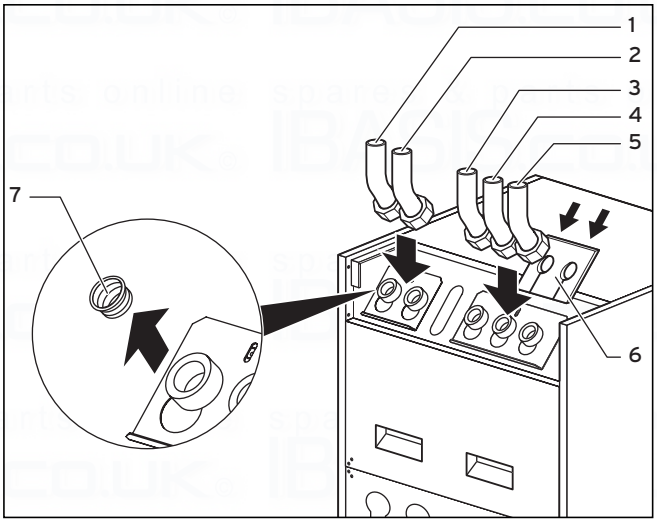

Fig. 4.12 Fitting the connection elbows

Key to Fig. 4.12
1 Heating feed
2 Heating return
3 Return to domestic hot water cylinder
4 Heat source to the heat pump
5 Heat source from the heat pump
6 Insulating pad
7 Blanking plugs

Caution!
To avoid leaks, take care that the correct seals are used on the connecting elbows!
Leaks can result if the seals with the metal support ring are not used in the heat source circuit!

- Remove the blanking plugs from the appliance connections (**7**). They are no longer needed and can be disposed of.
- Fit the three connecting elbows (**1** to **3**) with the yellow/green gaskets supplied with the accessories.
- Fit the two connecting elbows (**4** and **5**) with the seals with the metal support ring supplied with the accessories.
- The accessory kit contains an insulating pad for insulating the connection plate. Fit this insulating pad to the two right hand screwed connections (**6**).

4.12.1 Assembly of the heating system

Caution!
Risk of damage!
In order to be able to clear any possible overpressure, the heat pump must be connected to an expansion vessel and an expansion relief valve, at least DN 20 with a maximum opening pressure of 3 bar (not supplied).

Danger!
Risk of scalding!
The blow-off line on the expansion relief valve must be the size of the valve's outlet aperture and be installed in a frost-free environment. It must remain constantly open. It must be fitted in such a way that persons are not endangered by hot water or steam when it blows off.
We recommend the installation of a Vaillant safety assembly and tundish.

- Fit the heating flow and return lines with all components.
- Insulate all the pipes.

4.12.2 Assembly of the brine circuit (VWS only)

- Install the heat source pipes and all their associated components.

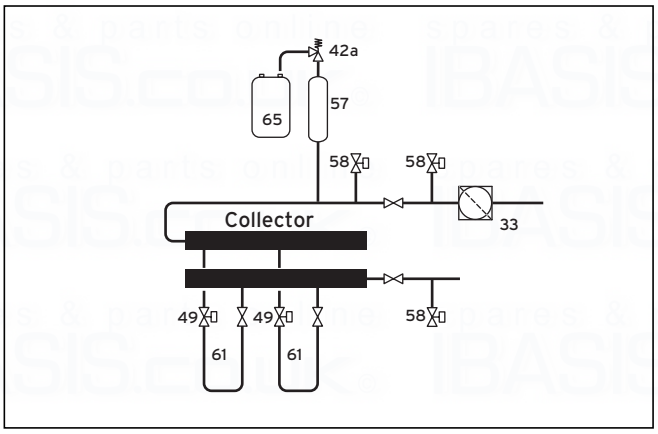

Fig. 4.13 VWS heat source circuit

Key to Fig. 4.13

33	Air separator/Dirt filter
42a	Expansion relief valve
49	Flow rate adjuster
57	Brine expansion tank
58	Filling and drainage tap
61	Brine circuit
65	Brine collecting tank

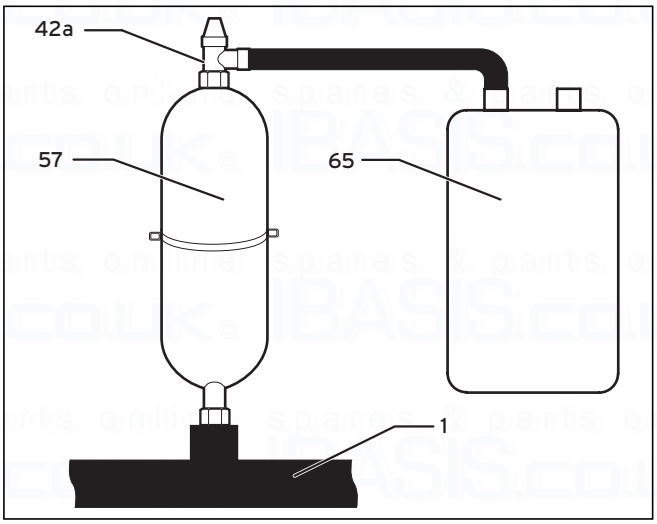

Fig. 4.14 Fitting the brine expansion tank

Note!
The brine expansion tank has a capacity of approx. 6 litres and is thus adequate for brine circuits up to a maximum of 1900 litres.

Caution!
Material damage resulting from escaping brine!
The screw couplings on the brine expansion tank must be sealed with hemp. Sealing with, e.g., teflon tape can lead to leaks in the brine circuit.

- Fit the bracket for the brine expansion tank to the wall using the wall plug and the screw.
- Unfasten the pre-assembled connection pieces from the brine expansion tank (**57**).
- Wind hemp into the outer threads of the connection pieces.
- Fit the first connection piece to the 3 bar expansion relief valve (**42a**) enclosed with the heat pump.
- Using the second connection piece, fit the brine expansion tank (**57**) from the accessory kit to the pipe (**1**) running from the heat source to the heat pump.
- Fix the brine expansion tank with the bracket.
- Fit the connection piece with the expansion relief valve to the brine expansion tank.
- Fit the brine collecting tank (**65**) to the expansion relief valve (**42a**) at zero pressure.
  The brine collecting tank must not be completely closed, as otherwise the functioning of the expansion relief valve is not guaranteed.
- Provide all the pipes with vapour-proof thermal insulation. The accessory kit contains the insulating mat provided for the thermal insulation of the connection plate.

4.12.3 Assembly of the well system (VWW only)

Caution!
Risk of damage!
Make sure that no negative pressure can arise in the lines during operation and after the well pump has been switched off. The flexible hoses within the heat pump can be damaged as a result of negative pressure in the lines.

With water as the heat source, the well system is in most cases implemented with a suction and injection well. The customer-side well pump (immersion pump) should be fitted in the suction well. Follow the well pump installation and assembly instructions in this respect. See Chap. 6.4.4. for the electrical connections to the well pump
When using ground water as a heat source, the quality of the water must be investigated before installation. To this end, a water sample must be examined in the laboratory and, using the aids provided by Vaillant for assessing ground water quality (tables, calculation software), a decision made as to whether the ground water can be used as a heat source. In the event of poor ground water quality, it may be necessary to use a VWS heat pump with a customer-side intermediate heat exchanger (for more details, see Vaillant PLI geoTHERM, No. 877959).

- Install the heat source pipes and all their associated components.
- Provide all the pipes with vapour-proof thermal insulation. The accessory kit contains an insulation mat for insulating the connection plate.

4.13 Fitting the VRC DCF outside temperature sensor

Fit the sensor in accordance with the enclosed installation instructions.

4.14 Fitting the VR 90 remote control unit

If you install several heating circuits, you can connect a separate VR 90 remote control unit for each of the first eight of them. It allows the operating mode and target room temperature to be set, and takes into account the actual room temperature measured by the built-in room sensor, if necessary.
It is also possible to adjust the parameters for the associated heating circuit (timer programme, heating curve etc.) and to select the special functions (party, etc.).
In addition, it is possible to query the heating circuit and to display service and fault messages.
For assembly of the VR 90 remote control unit, see its enclosed installation instructions. Regarding installation see Chapter 6.9.1.

4.15 Installing the VR 60 mixer module

With the mixer module, you can expand the control system of the heating installation by two mixer circuits.
You can connect a maximum of six mixer modules.
A unique bus address is set on the mixer module by means of a rotary switch. The setting of the heating programme and all the required parameters is carried out from the operating console. All heating circuit connections (sensors and pumps) are made directly on the mixer module using a ProE plug.
For assembly of the VR 60 mixer module, see its enclosed installation instructions. Regarding installation see Chapter 6.9.2.

5 Filling the heating and heat source systems

The heating circuit and the brine circuit (VWS only) must be filled before the heat pump can be put into operation.

Note!
The heat pump cladding sections are only fitted after the filling and subsequent bleeding of the heating circuit.

5.1 Filling the heating circuit

Caution!
Malfunction!
Fill the heating circuit via the integrated filling and draining valve, so that the heating circuit is completely bled.
If there is a DHW cylinder connected, make sure that the 3-way valve is in the centre position.

- If there is a DHW cylinder connected, set the 3-way valve (see Fig. 2.6, Item **16**) to the centre position.
- Open all the thermostatic valves in the heating system.
- Connect a filling hose to a water tap.
- Attach the free end of the filling hose to the filling valve (see Fig. 2.6, Item **8**).
- Open the filling valve.
- Turn the water tap on slowly and fill with water until the pressure gauge indicates a system pressure of approx. 1.5 bar.
- Close the filling valve and detach the hose.
- Bleed the system again at the points provided.
- Re-check the water pressure in the system (repeat the filling process if necessary).

5.2 Filling the brine circuit (VWS only)

The brine fluid consists of water mixed with a heat transfer fluid concentrate. As an additive we recommend propylene glycol (alternative: ethylene glycol) with corrosion-inhibiting additives. A DN 40 collector hose has a capacity of approx. 1 litre per continuous metre.

The brine fluids that may be used differ greatly from region to region. Please find out about this from the authorities responsible.

Vaillant only approves of operating the heat pump with the following brine media:

- max. 30 % ethylene glycol/water
- max. 33 % propylene glycol/water
- potassium carbonate/water
- max. 60 % ethanol/water

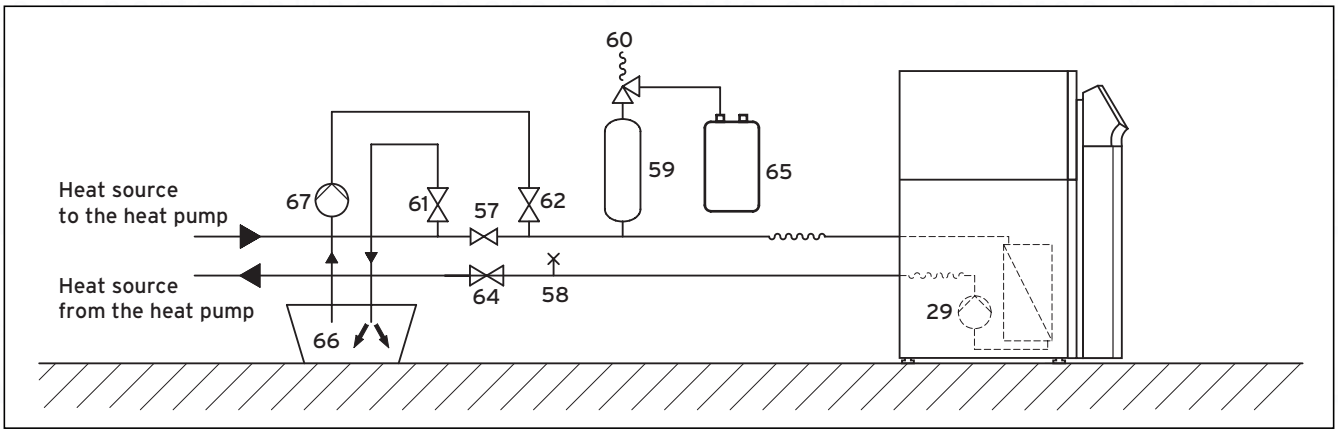

Fig. 5.1 Brine circuit

Key to Fig. 5.1

29	Brine pump
57	Stop valve
58	Bleed valve
59	Brine expansion tank
60	Expansion relief valve
61	Stop valve
62	Stop valve
64	Stop valve
65	Brine collecting tank
66	Brine reservoir
67	Filling pump

Caution!
Environmental hazard!
Leakage of brine media must not result in any contamination of the ground water or the soil. Substances must be selected that are non-toxic and biologically degradable.

Note!
Only fit the heat pump cladding sections after the filling and subsequent bleeding of the heating circuit.

To fill the brine circuit, proceed as follows:

- Mix the antifreeze used by Vaillant in Germany, Austria and Switzerland, 1.2 % propylene glycol, with water in the proportion 1 : 2.
  This offers frost protection down to -15 °C.
- Mix water and antifreeze to the specified concentration in an external container (e.g. plastic canister, see Fig. 6.1, Item. **66**). Every batch of the mixture must be carefully blended.
- Check the mixing proportions of the brine fluid. Vaillant recommends the use of a refractometer for this purpose.
- Then fill the brine mixture from the container (**66**) into the heat source system. This will require a filling pump (**67**) that simultaneously bleeds the collector circuit as it fills it. Vaillant recommends the Vaillant filling pump (Art.No. 307 093). Connect the pressure line on the pump to stop valve (**62**).
- Close stop valve (**57**).
- Open stop valves (**62**) and (**64**).
- Open stop valve (**61**) and connect a hose to it, with the other end of the hose draining into the glycol mixture.
- Start the filling pump (**67**) in order to fill the collector hose.
- Allow the filling pump (**67**) to run until fluid free of air emerges from the hose connected to stop valve (**61**).
- Now open valve (**57**)
  so that the air between valves (**61**) and (**62**) can escape.
- Close valve (**61**) and pressurise the brine circuit using the filling pump (**67**). Take care that the pressure does not exceed 3 bar.
- Now close valve (**62**) as well.
- Switch off the filling pump (**67**) and remove the filling hose.
- Open the expansion relief valve (**60**) to allow any possible overpressure to discharge. The brine expansion tank must be 2/3 full of fluid. Make sure that valve (**61**) is closed.
- Fill any remaining brine fluid into a suitable container (e.g. plastic canister) for topping up later and hand it over to the user for safekeeping.

Further bleeding is carried out after the cladding sections have been fitted and the heat pump has been started (see Chap. 7.4).

Check the filling level of the brine fluid

Caution!
Risk of damage!
The filling level is correct when the brine expansion tank is 2/3 full. The installation can be damaged if the filling level is too high.

- Top up the brine fluid when the filling level has fallen so low that it is no longer visible in the expansion tank.

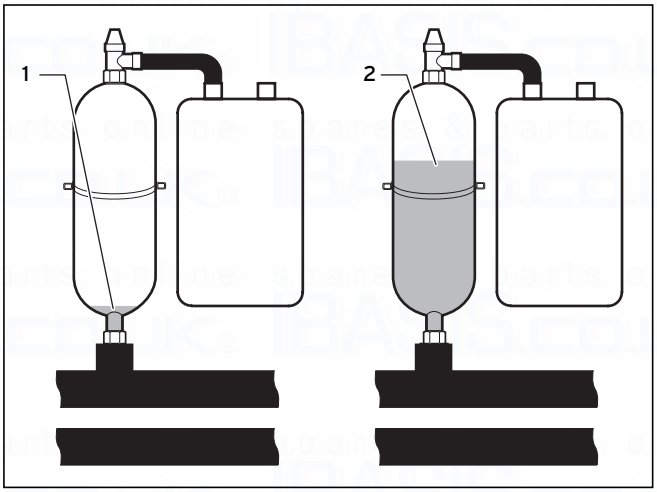

Fig. 5.2 Filling level of the brine expansion tank

Key to Fig. 5.2
1 Filling level too low
2 Filling level correct

The filling level of the brine fluid can fall a little in the first month following commissioning of the system; this is quite normal. The filling level can also vary depending on the temperature of the heat source, but under no circumstances should it fall so far that it is no longer visible in the expansion tank.

5.3 Well system (VWW only)

When using water as the heat source, it is not necessary to fill the heat source system as it is an open system.

6 Electrical installation

6.1 Safety and installation information

Danger!
Risk of electric shock!
Always switch off the power supply before carrying out any electrical installation work. Make sure that it is secured against inadvertent switching on again.

Caution!
Risk of damage!
The electrical connection must be equipped with a customer-supplied isolation device having a contact separation of at least 3 mm on all lines (e.g. a line protection switch).

It makes sense to fit this isolation device in the immediate vicinity of the heat pump.

Caution!
Risk of damage!
The electrical installation may only be undertaken by an authorised engineer.

Caution!
Risk of short circuits!
When connecting conductors carrying 230 V to the ProE plug, do not strip the insulation back by more than 30 mm for safety reasons.
If you strip back by more than this, there is a risk of short circuits to the PCB if the conductors are not correctly attached in the plug.

Caution!
Risk of malfunction!
The lines for the outside temperature sensor and the room thermostat carry small, weak currents. Interference from the environment can have an effect on the sensor lines and transmit incorrect information to the heat pump controller, and for this reason the sensor lines must be run absolutely correctly.
Low current lines must be run at an adequate distance from high current lines. If low and high current lines are run in parallel, a minimum distance of 25 cm applies for lengths greater than 10 m.

At start-up, the controller automatically checks for the correct phase sequence. Switch two phases over if there is an error message.

Furthermore, take note:
- For power, connect the heat pump to a 400 V three-phase mains supply with one **neutral and one earth conductor**. Fuse this connection as specified in the technical data.
- Install the heat pump with a fixed mains connection.
- The required conductor cross sections must be determined by a qualified technician, using the values specified in the technical data for the maximum rated output. In any case, take into account the on-site installation conditions.
- If the local power company stipulates that the heat pump should be controlled by a blocking signal, fit an appropriate contact switch, as specified by the power company, and connect it to the heat pump with a two-core cable.

6.2 Regulations pertaining to electrical installations

The maximum sensor cable length of 50 m may not be exceeded.
Where lengths are greater than 10m, route the connection cables carrying 230 V/400 V separately from the sensor or bus cables.

Do not use free terminals on the appliance as support terminals for other wiring.

6.3 Electrical control box

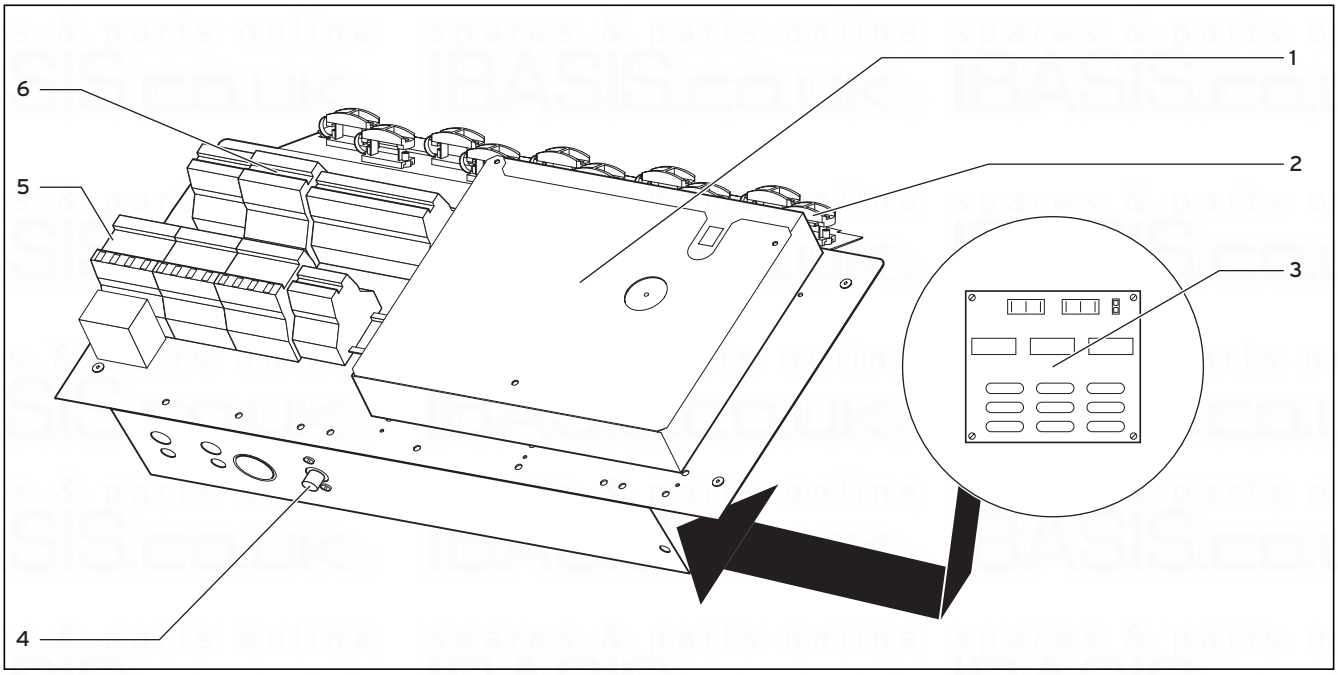

Fig. 6.1 Electrical control box

Key to Fig. 6.1

1 Controller PCB (under the cover plate) with connection strip for sensors and external components
2 Cable clamps
3 Start-up current limiter PCB (accessory), lower level of control box
4 Safety thermostat (STL) for the auxiliary heating
5 Contactors for the auxiliary heating element and compressor, for the VWW only: Well pump contactor with motor protection switch
6 Power supply connection terminals

The exact allocation of the connection terminals (**6**) can be found in Chap. 6.4.

Additionally, there are two coiled cables hanging inside the control box (not shown here):
- small two-way plug:
  connecting cable for the operating console
- large three-way plug:
  power supply for vrnetDIALOG

A control cable for the vrnetDIALOG is also supplied (accessories).

6.4 Connecting the power supply

Different types of power supply are provided for heat pumps by the power companies. The heat pump can be operated with various types of mains feed. Three types of connection are described on the following pages.

- Pass the power supply cable(s) through the elongated hole in the rear of the unit.
- Pass the cables through the unit, through the appropriate strain relief clamps and on to the connection terminals on the connector strip.
- Carry out the wiring of the connection as illustrated in the following wiring diagrams.

Caution!
The appliance covers must be fitted after completion of the installation work.

6.4.1 Unblocked mains supply (Electroplan 1)

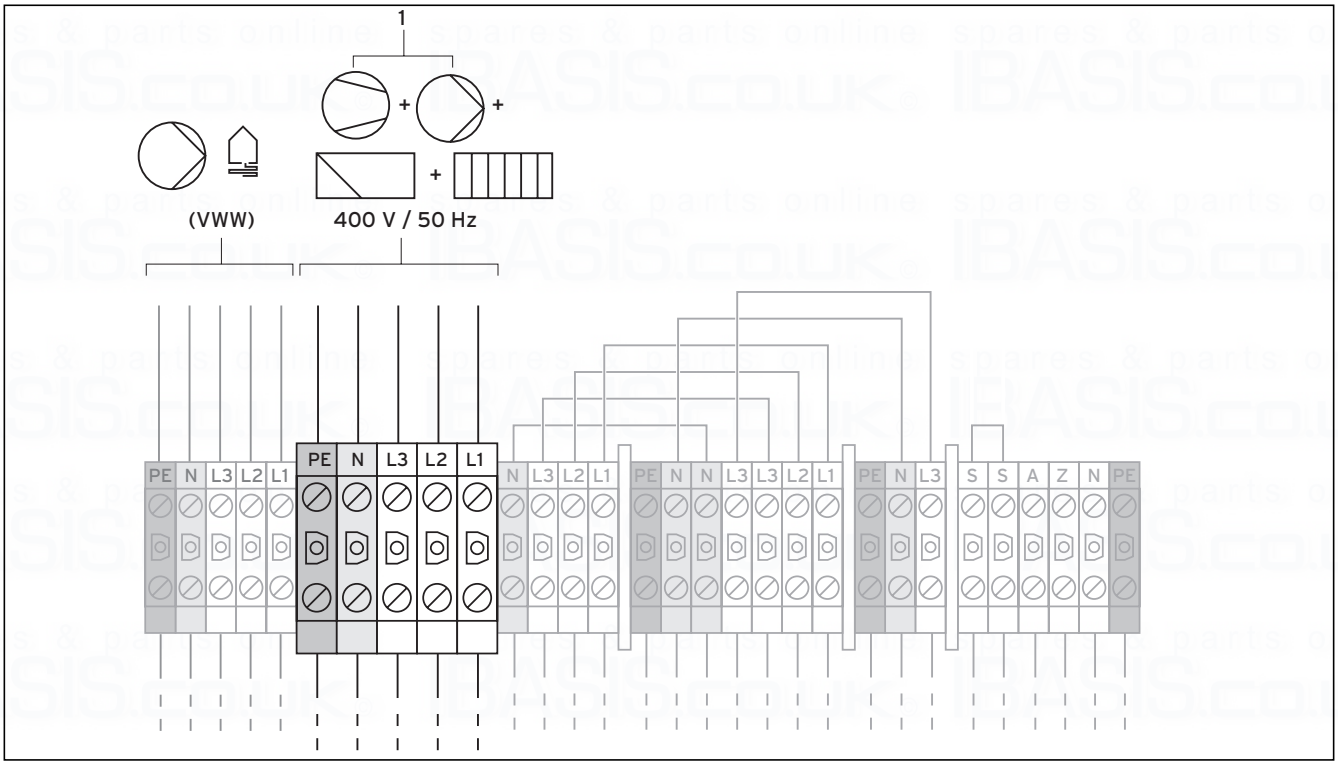

Fig. 6.2 Unblocked mains feed (supplied configuration)

Key to Fig. 6.2

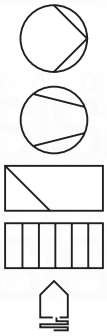

Pump

Compressor

Controller

Auxiliary heater

Heat source circuit

This is how the heat pump is wired when delivered. The heat pump is connected to the mains on a single tariff (one consumer meter) (**1**). The power company reserves the right to switch off the compressor and the auxiliary heating as required by means of a ripple control signal. The duration and frequency of the shutdowns is determined by the company, or should be clarified with them.

- Connect the power supply to the principal mains feed (**1**).
- Connect the ripple control signal relay to terminal 13, "EVU" (see Fig 6.6), if required by the power company. The heat pump is blocked with this signal when the contact is closed.

You will find an overview of the complete wiring diagram in the appendix.

6.4.2 Dual circuit feed, heat pump tariff (Electroplan 2)

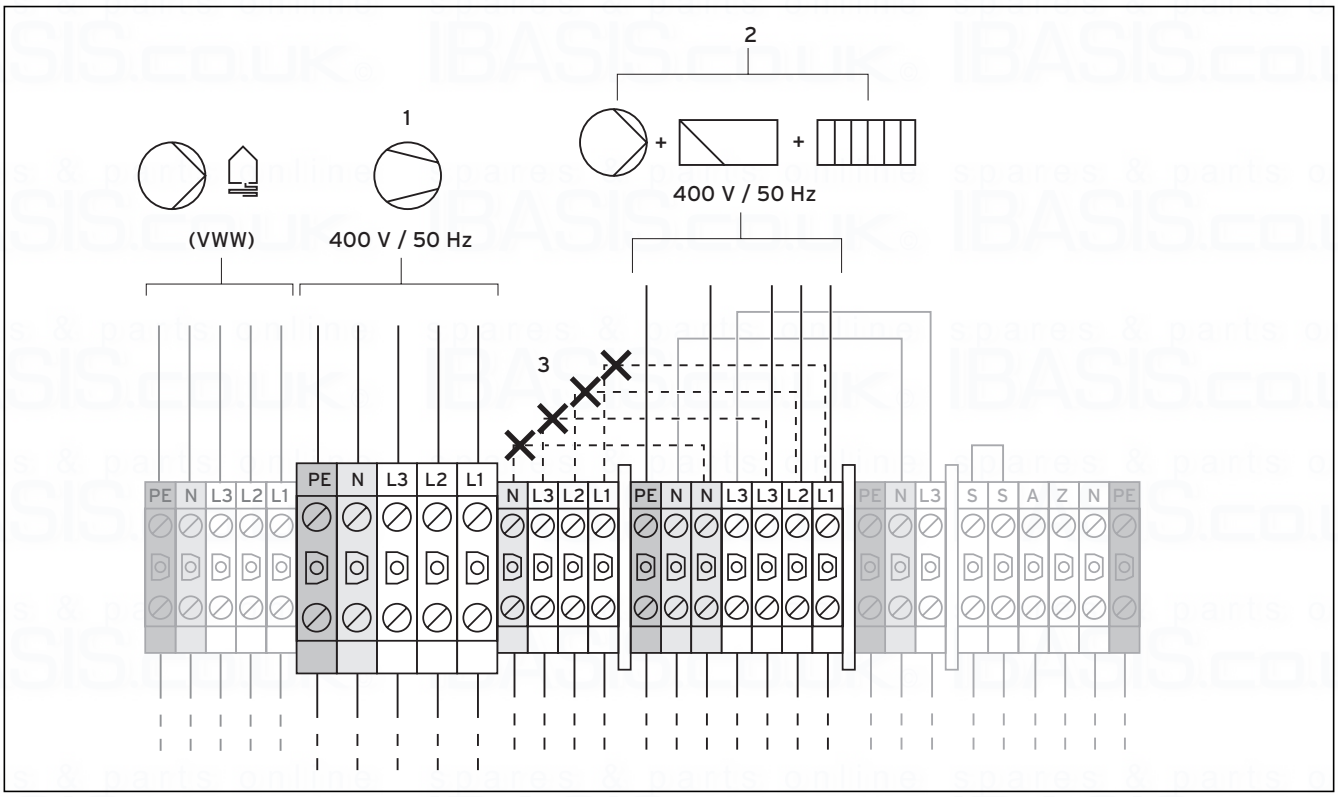

Fig. 6.3 Dual circuit feed, heat pump tariff

Key to Fig. 6.3

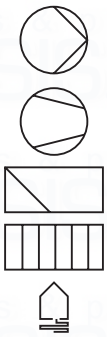

Pump

Compressor

Controller

Auxiliary heater

Heat source circuit

In this instance the heat pump is operated on two tariffs (two consumer meters). A permanent supply (**2**) for the **secondary consumers (auxiliary heating, circulation pumps, controller, etc.)** must be ensured via a meter. The **low tariff supply (1) for the compressor** is effected via a second meter and can be interrupted by the power company at peak times.

- Remove the jumpers (dashed lines, **3**).
- Connect the permanent power supply to the high tariff mains feed (**2**).
- Connect the low tariff power supply to the low tariff mains feed (**1**).
- Connect the ripple control signal relay to terminal 13, "EVU" (see Fig 6.6), if required by the power company. The heat pump is blocked with this signal when the contact is closed.

You will find an overview of the complete wiring diagram in the appendix.

6.4.3 Dual circuit feed, special tariff (Electroplan 3)

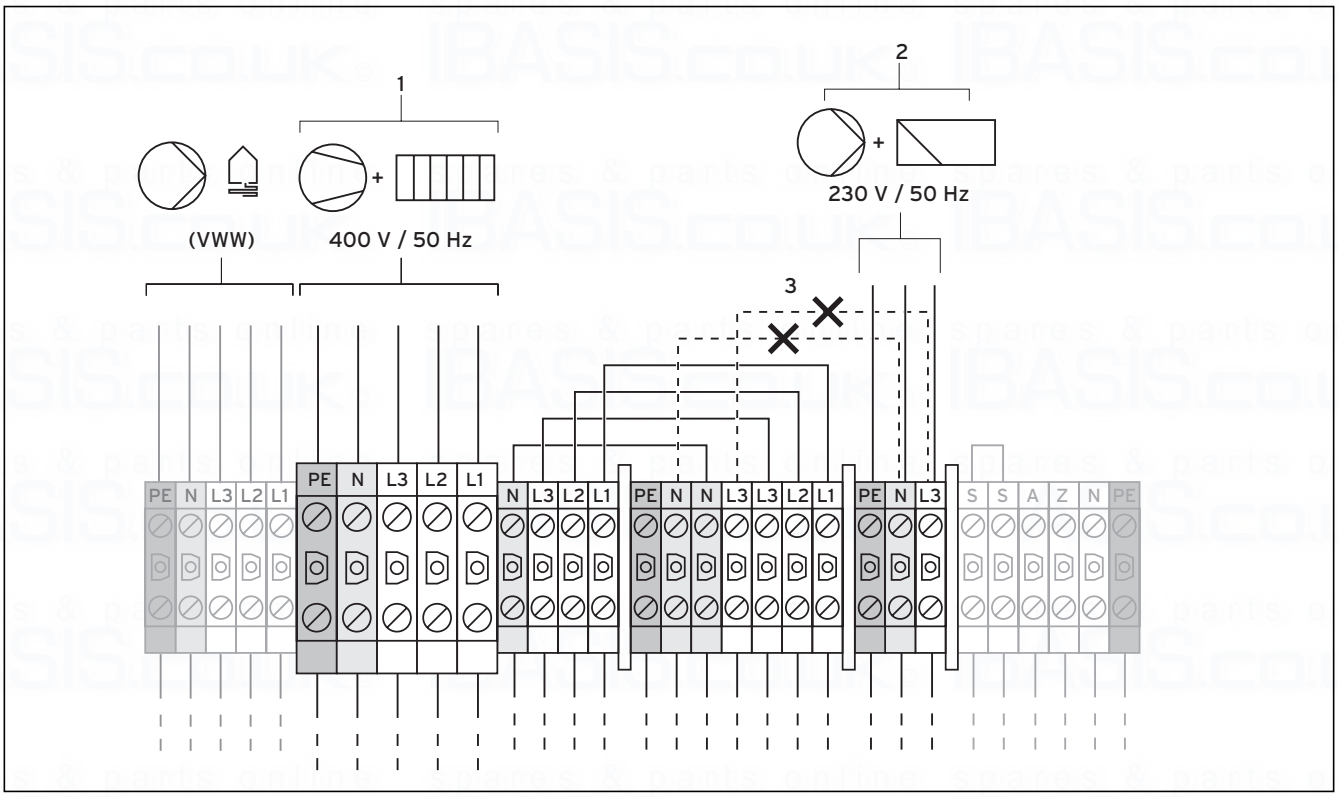

Fig. 6.4 Dual circuit feed, special tariff

Key to Fig. 6.4

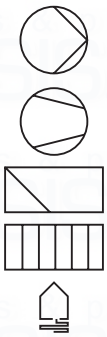

Pump

Compressor

Controller

Auxiliary heater

Heat source circuit

In this instance the heat pump is operated on two tariffs (two consumer meters). A permanent supply (**2**) for the **secondary consumers (circulation pumps, controller, etc.)** must be ensured via a meter. The **low tariff supply (1) for the compressor and the auxiliary heating** is effected via a second meter and can be interrupted by the power company at peak times.

- Remove the jumpers (dashed lines, **3**).
- Connect the permanent power supply to the controller mains feed (**2**).
- Connect the low tariff power supply to the low tariff mains feed (**1**).
- Connect the ripple control signal relay to terminal 13, "EVU" (see Fig 6.6), if required by the power company. The heat pump is blocked with this signal when the contact is closed.

You will find an overview of the complete wiring diagram in the appendix.

6.4.4 Connecting external components

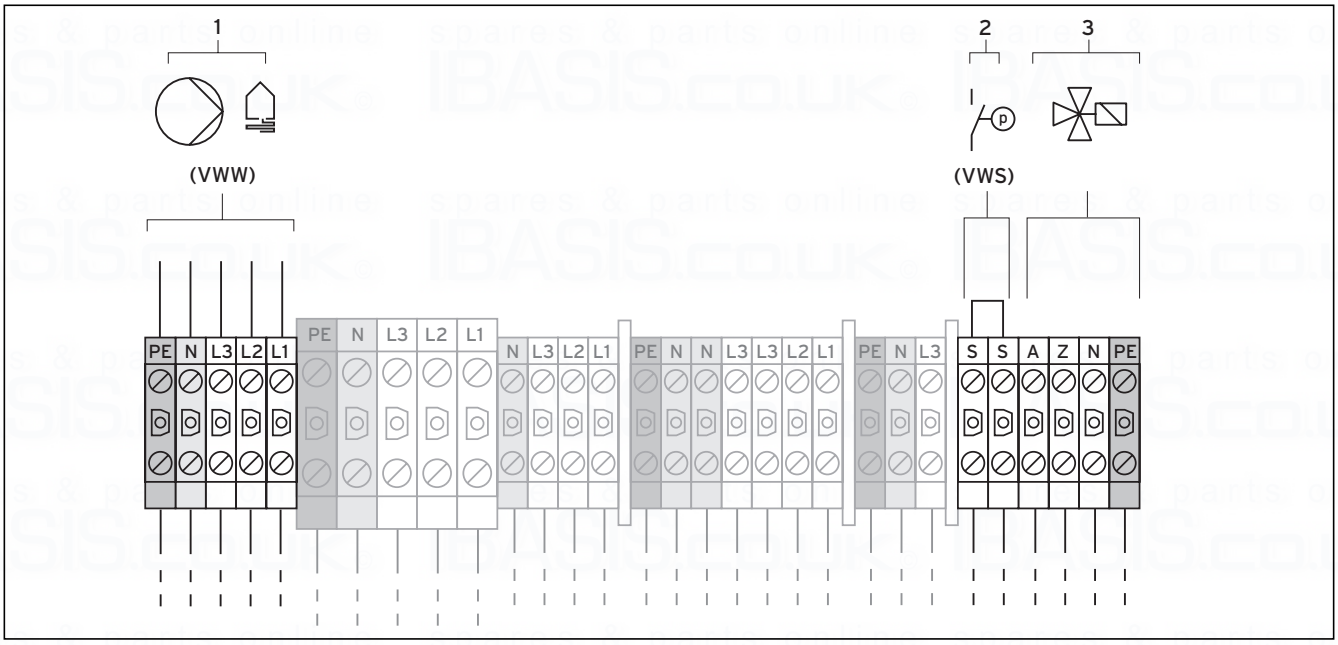

Fig. 6.5 Connecting external components

Key to Fig. 6.5

Pump

Heat source circuit

Brine Switch

3-way valve with solenoid

Only if the VPA Multi-cylinder or some other multi-cylinder is installed

- Connect the external 3-way valve for the multi-cylinder to the terminals (**3**).

Note!
When using an external 3-way valve, the proper functioning of the heat pump is only assured if the valve supplied with the VPA Multi-cylinder is used.

VWW only:

- Connect the customer-side well pump to the terminals (**1**).

The well pump is connected to the 400 V three-phase supply via the well pump contactor.
A motor protection switch in the heat pump (see Fig. 6.1, Item **5**) protects the well pump from overload. The switch should be set to the well pump's rated current (0.8 – 2.7 A).

Caution!
Risk of damage!
The well pump will not be protected from overload unless the motor protection switch is properly set.

VWS only:
Should you wish to connect an external brine pressure switch to the heat pump, use the terminals (**2**) for this.

6.5 Connecting the start-up current limiter (accessory)

Some power companies demand the installation of a start-up current limiter (Art. No. 0020025744) for the heat pump.

- Fit the start-up current limiter PCB beneath the controller PCB as described in its manual (see Fig. 6.1).
- Connect the start-up current limiter in accordance with its manual.

6.6 Controller PCB at a glance

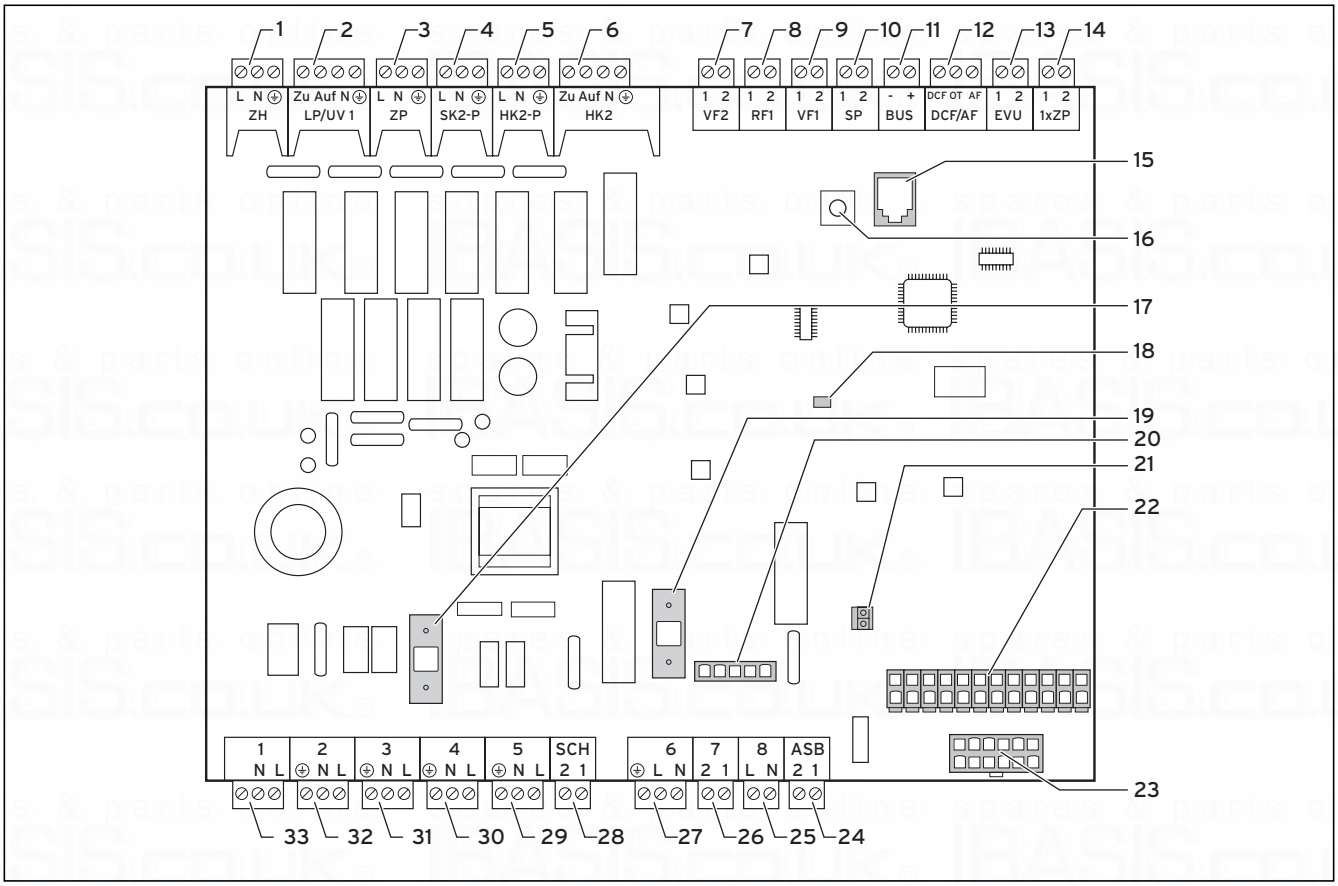

Fig. 6.6 Controller PCB

Key to Fig. 6.6

Upper connection terminals

1	<ZH>	Electric auxiliary heating
2	LP / UV 1	3-port diverter valve for hot water generation
3	<ZP>	Circulation pump for hot water
4	<SK2-P>	VWW only: Well pump contactor
5	<HK2-P>	External (second) heating circuit pump
6	<HK2>	3-way mixer valve
7	VF2	External flow sensor
8	RF1	Buffer cylinder base temperature sensor
9	VF1	Buffer cylinder head temperature sensor
10	SP	DHW cylinder temperature sensor
11	BUS	eBUS
12	DCF / AF	Outside temperature sensor + DCF signal
13	EVU	EVU contact (supply interruption, ripple control signal from power company) open: compressor operation permitted closed: compressor operation blocked
14	1xZP	Contact for non-recurring request for the circulation pump, e.g. via pushbutton

PCB components

15 eBUS/vrDIALOG
16 eBUS address rotary switch, set to "1" (factory setting)
17 Fuse T 4A/250 V
18 Check LED for power supply (lights green if OK)
19 Fuse T 4A/250 V for brine pump
20 Monitoring of compressor phase sequence
21 Controller plug (User Interface)
22 Sensor connection plug 1
23 Sensor connection plug 2

Lower connection terminals

24	ASB	Starting current limiter
25	8	Compressor contactor
26	7	Pressure switch
27	6	(not connected)
28	SCH	Accessory - brine pressure switch (VWW: Flow switch)
29	5	Brine pump (VWS only)
30	4	Voltage supply
31	3	Internal heating circuit pump
32	2	unused
33	1	unused

The controller PCB has a protective cover plate which has cut-outs for the eBUS/vrDIALOG (Item **15**) connection, as well as for the power supply LED (Item **18**).
The cover plate must be removed to change the fuses, Items **17** and **19**.

6.7 Wiring the controller PCB

The controller has an automatic sensor recognition function. You must configure the connected heating circuits in accordance with the system combination. In the following you will find various options for operating the heat pump.

6.7.1 Connecting the VR 10 standard sensor

Additional sensors are required as flow, return, collector or cylinder sensors, depending on the configuration of the system. The VR 10 standard sensor is so designed that it can be used as an immersion sensor, e.g. as a cylinder sensor in a cylinder sensor tube, or as a flow sensor in a hydraulic switch. Using the enclosed cable tie you can also attach it as a contact sensor to the heating flow or return pipes. We recommend that the pipe together with the sensor be insulated to ensure optimum temperature measurement.

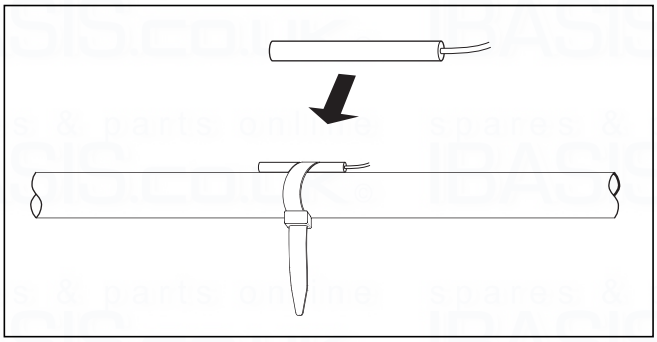

Fig. 6.7 VR 10 standard sensor

6.7.2 Direct heating operation (Hydraulic plan 1)

The heat pump is connected directly to the underfloor heating circuit. Control is carried out using energy balance control by default (see Chap. 8.4.2). To do this, the VF2 flow temperature sensor must be connected (floor protection circuit).

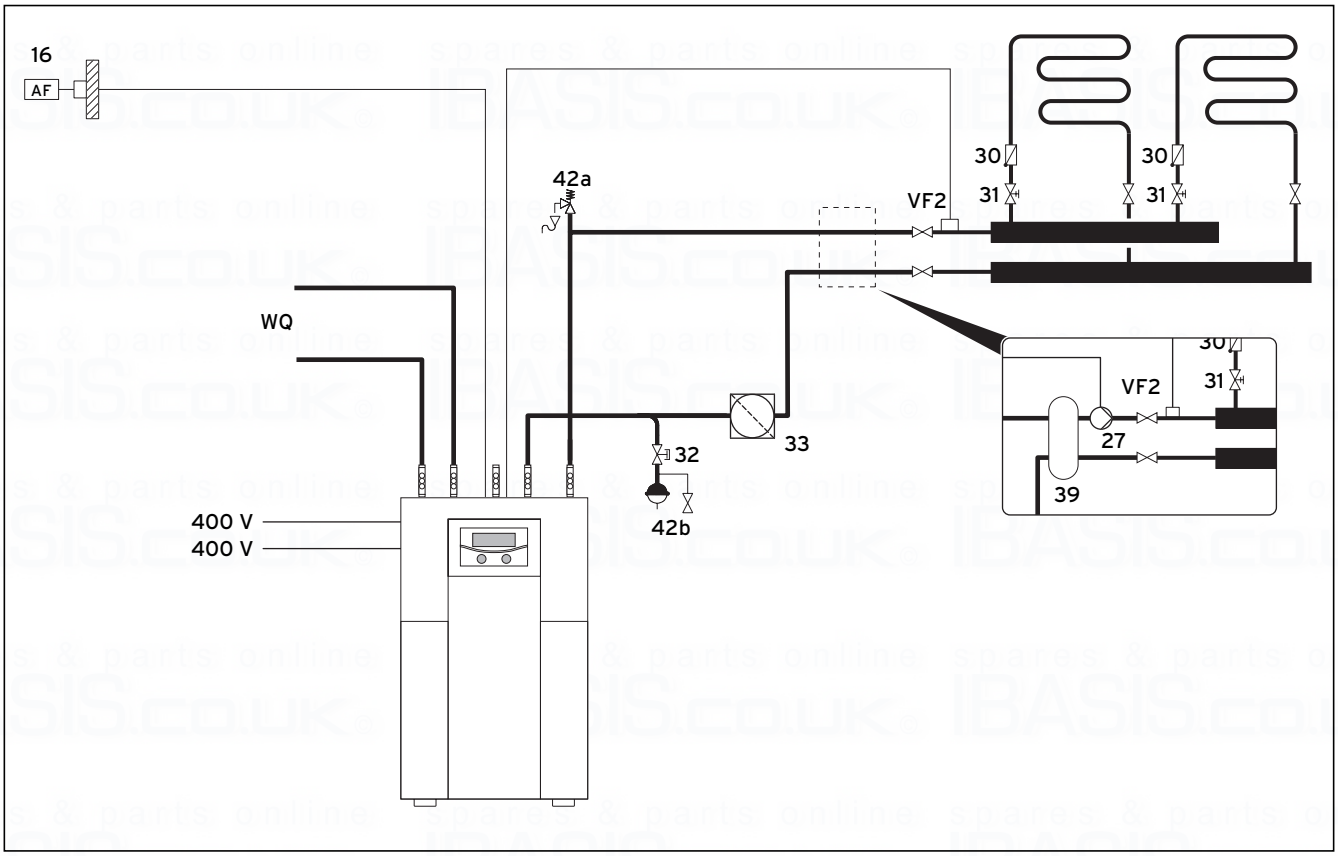

Fig. 6.8 Hydraulic plan 1

Key to Fig. 6.8

16	External sensor (AF)
30	Non-return valve
31	Control valve with position indication
32	Cap valve
33	Air separator/Dirt filter
42a	Expansion relief valve
42b	Expansion vessel
43	Safety group for hot water pipe
VF2	Supply temperature sensor
WQ	Heat source circuit

optional for hydraulic decoupling:

27	Heating circuit pump with control line to the heat pump
39	Low loss header

Note!
Should hydraulic decoupling of the heating circuit be necessary, then fit a low loss header and an external heating circuit pump as shown in Fig. 6.8.

Note!
If you have fitted a low loss header between the heat pump and the heating system, then the VF2 temperature sensor must be mounted in the flow line from the low loss header to the heating system.

6.7.3 Mixer circuit with buffer cylinder (Hydraulic plan 2)

The unregulated underfloor heating circuits are operated by the external heating circuit pump from the buffer cylinder via a mixer. The flow temperature sensor sits behind the external pump.
The heat pump responds to a demand for heat from the buffer cylinder.

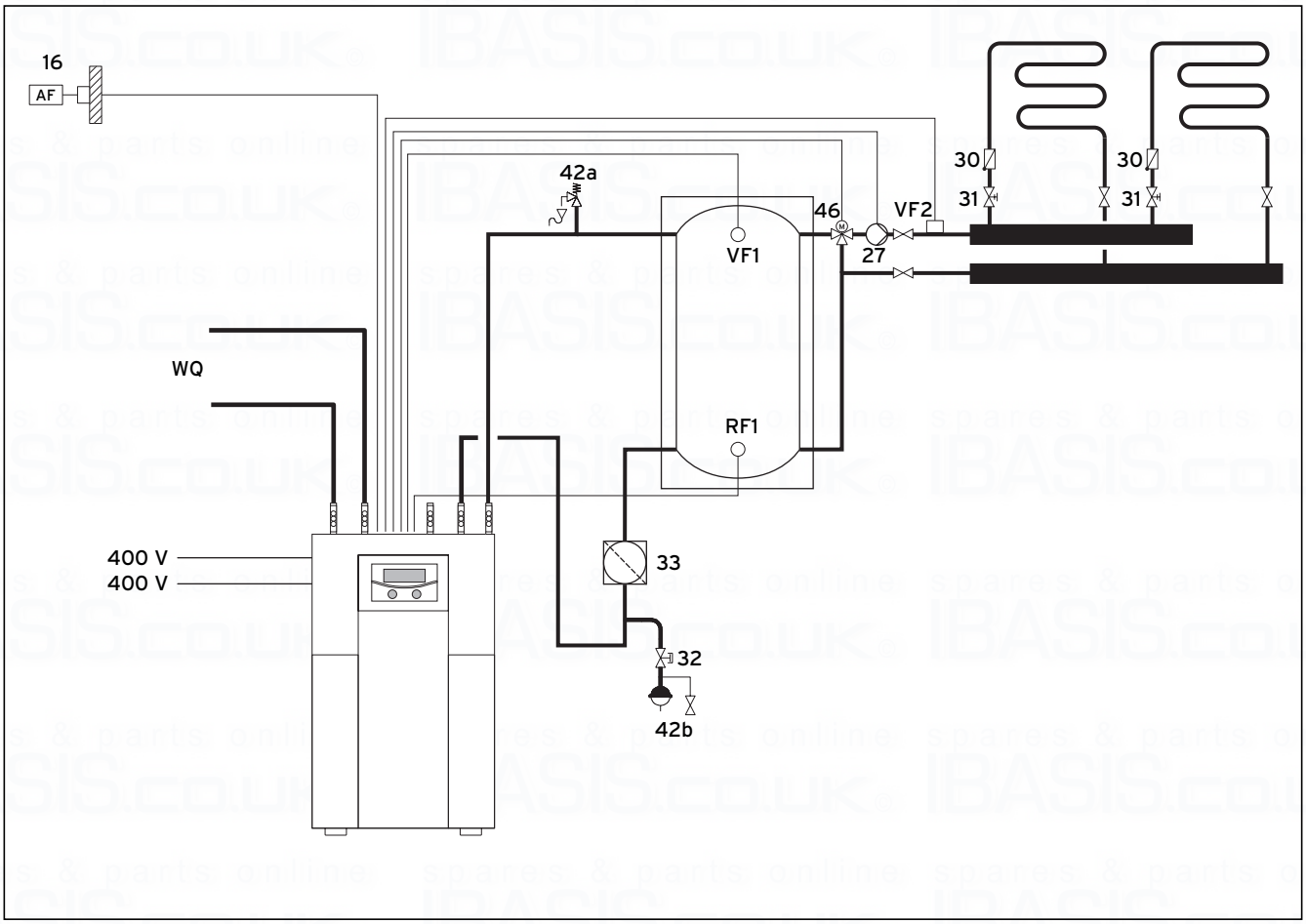

Fig. 6.9 Hydraulic plan 2

Key to Fig. 6.9

16	External sensor (AF)
27	CH pump
30	Non-return valve
31	Control valve with position indication
32	Cap valve
33	Air separator/Dirt filter
42a	Expansion relief valve
42b	Expansion vessel
46	3-way mixer valve
VF1	Buffer cylinder head temperature sensor
VF2	Supply temperature sensor
RF1	Buffer cylinder base temperature sensor
WQ	Heat source circuit

6.7.4 Direct heating operation and domestic hot water cylinder (Hydraulic plan 3)

The heat pump is connected directly to the underfloor heating circuit. Control system is carried out using energy balance control by default (see Chap. 8.4.2). The VF2 flow temperature sensor must be connected (floor protection circuit).
The heat pump also supplies a domestic hot water cylinder.

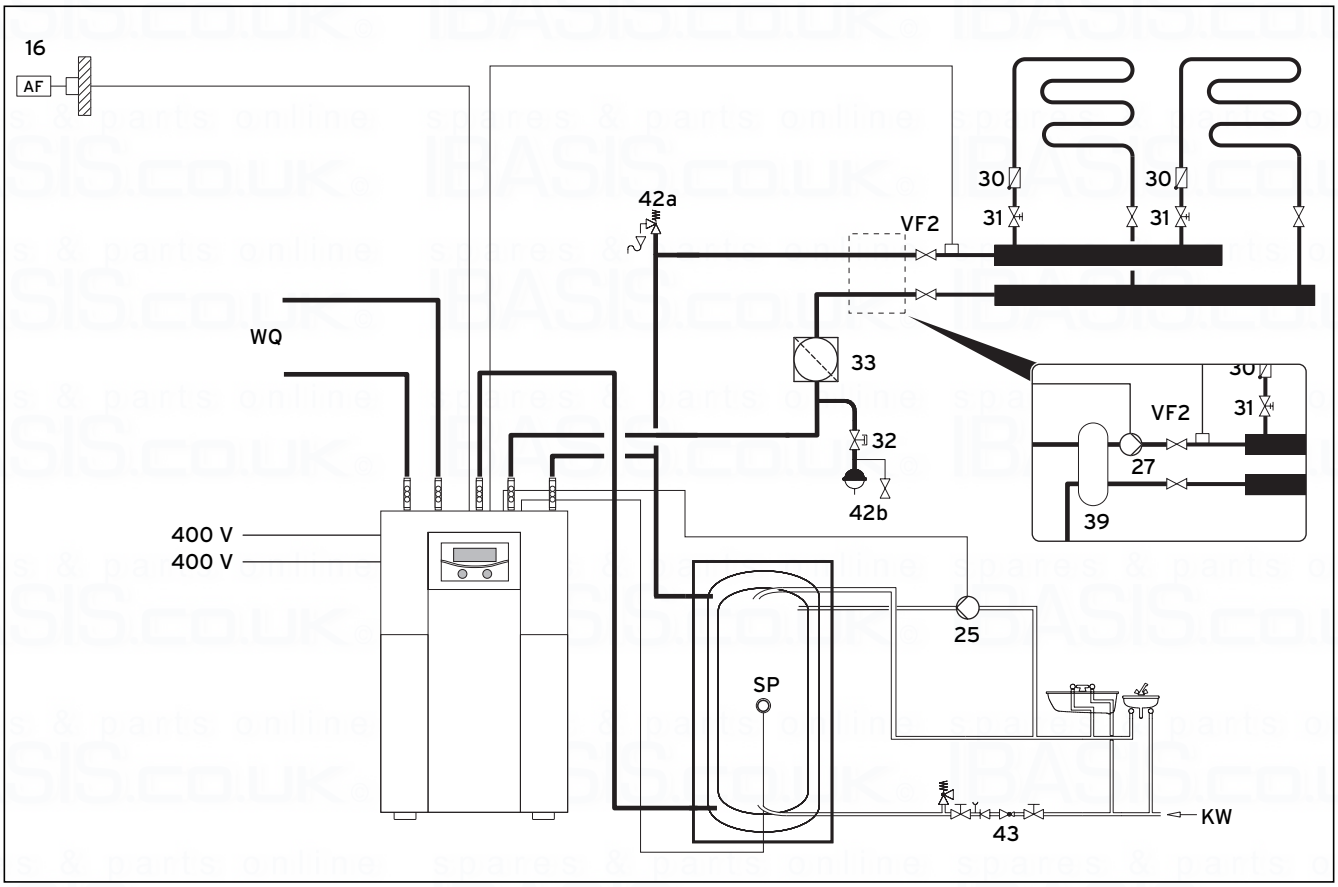

Fig. 6.10 Hydraulic plan 3

Key to Fig. 6.10

16	External sensor (AF)
25	Circulation pump
30	Non-return valve
31	Control valve with position indication
32	Cap valve
33	Air separator/Dirt filter
42a	Expansion relief valve
42b	Expansion vessel
43	Safety group for hot water pipe
VF2	Supply temperature sensor
SP	Cylinder temperature sensor
WQ	Heat source circuit
KW	Cold water

optional for hydraulic decoupling:

27	Heating circuit pump with control line to the heat pump
39	Low loss header

Note!
Should hydraulic decoupling of the heating circuit be necessary, then fit a low loss header and an external heating circuit pump as shown in Fig. 6.10.

Note!
If you have fitted a low loss header between the heat pump and the heating system, then the VF2 temperature sensor must be mounted in the flow line from the low loss header to the heating system.

6.7.5 Mixer circuit with buffer cylinder and domestic hot water cylinder (Hydraulic plan 4)

The unregulated underfloor heating circuits are operated by the external heating circuit pump from the buffer cylinder via a mixer. The flow temperature sensor sits behind the external pump.
The heat pump responds to a demand for heat from the buffer cylinder.

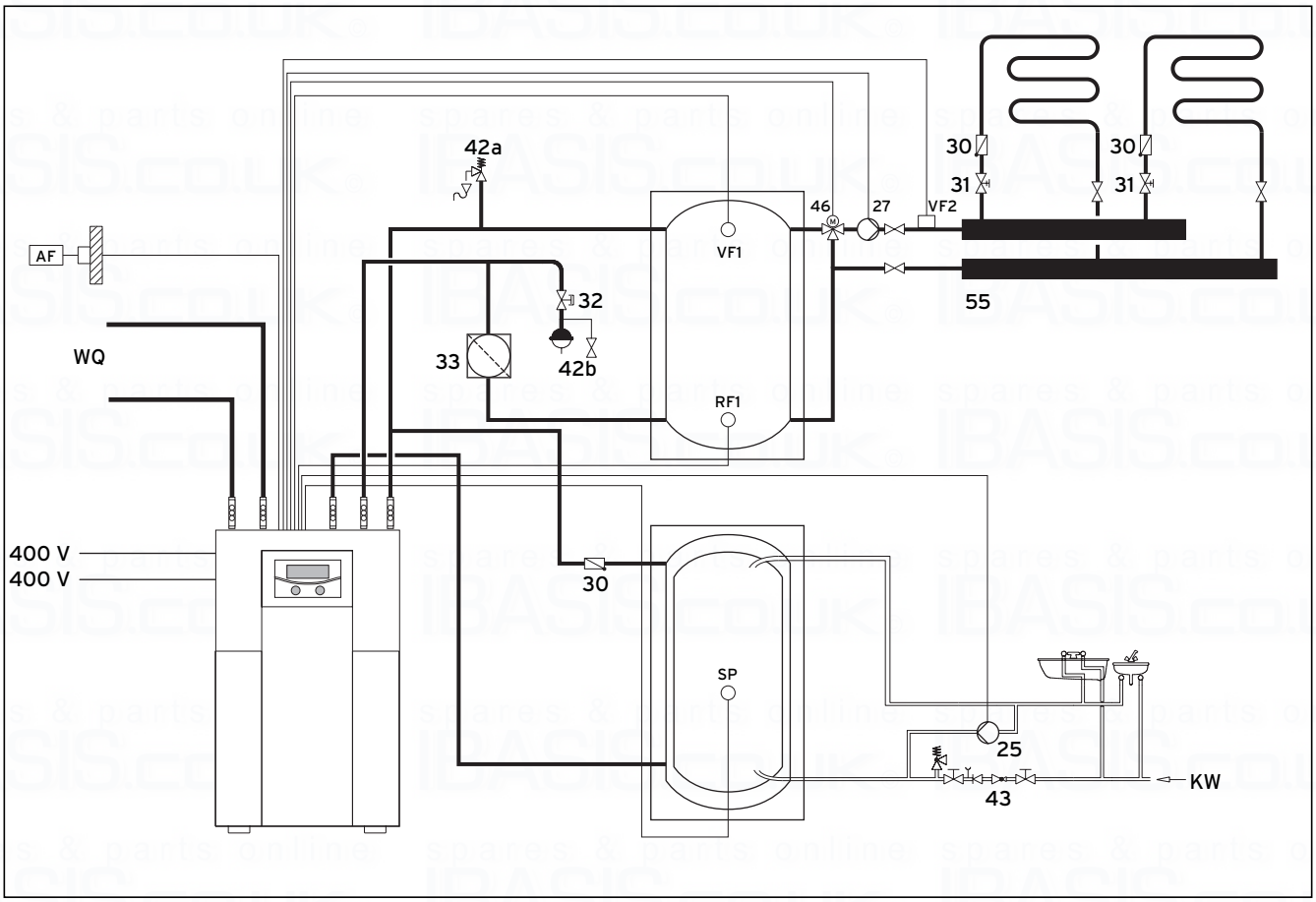

Fig. 6.11 Hydraulic plan 4

Key to Fig. 6.11

16	External sensor (AF)
25	Circulation pump
27	CH pump
30	Non-return valve
31	Control valve with position indication
32	Cap valve
33	Air separator/Dirt filter
42a	Expansion relief valve
42b	Expansion vessel
43	Safety group for hot water pipe
46	3-way mixer valve
VF1	Buffer cylinder head temperature sensor
VF2	Supply temperature sensor
RF1	Buffer cylinder base temperature sensor
SP	Cylinder temperature sensor
WQ	Heat source circuit
KW	Cold water

6.7.6 Cooling

Cooling mode is only possible when using the VWZ NC 14/17 accessory, and only for VWS 14 and VWS 17 heat pumps. More detailed information about this can be found in the installation manual for the VWZ NC 14/17 accessory. Information regarding the hydraulic plans can be found in the installation manual for the VWZ NC 14/17 accessory.

6.8 Connecting the DCF receiver

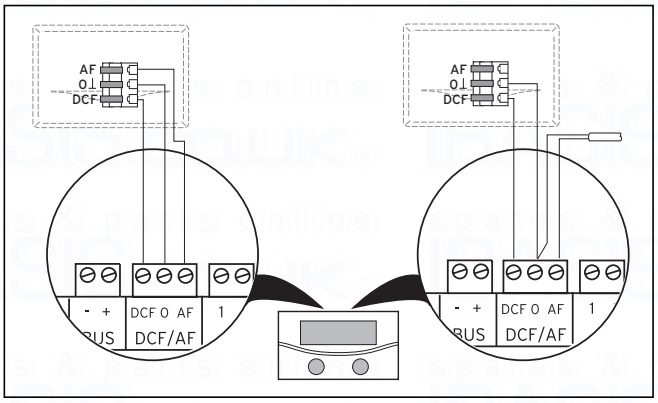

Fig. 6.12 Connecting the VRC DCF receiver

- Wire the DCF receiver as shown in Fig. 6.12:
  - left: enclosed external sensor (DCF receiver)
  - right: alternative solution with separate external sensor

A special solution with a separate VRC 693 outdoor sensor is necessary if, e.g., no radio reception is available at the location of the outdoor sensor.

6.9 Connecting accessories

Caution!
Risk of damage!
Switch off the power before connecting additional units to the eBUS.

You can connect the following accessories:
- Up to six VR 60 mixer modules to expand the system by system circuits (factory pre-set as mixer circuits).
- Up to eight VR 90 remote control units to control the first eight heating circuits.
- vrnetDIALOG 840/2 or 860/2
- Connection in each case to the eBUS terminal (Fig. 6.6, Item **11**), connected in parallel.

6.9.1 Installing the VR 90 remote control unit

The VR 90 remote control units communicate with the heating controller via the eBus. You can connect them to any interface in the system. You need only make sure that the bus interfaces are connected to the heat pump controller.

The structure of the Vaillant system allows you to run the eBus from component to component (see Fig. 6.13). Interchanging the cables does not lead to any impairment in communication.

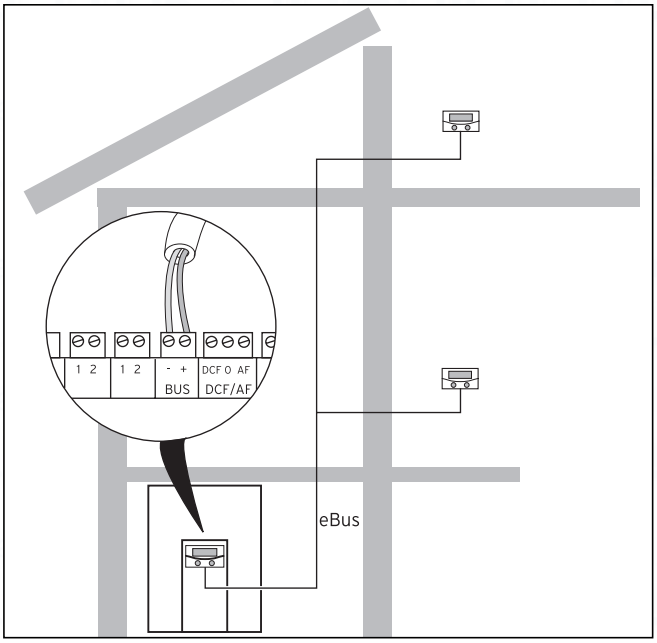

Fig. 6.13 Connecting remote control devices

All eBus connector plugs are designed to allow you to wire at least 2 x 0.75 mm² per pigtail.
The use of cable with a cross-section of 2 x 0.75 mm² is therefore recommended for eBUS cables.

Setting the bus address

In order to ensure perfect communication between all components it is necessary to provide the remote control unit with an address that matches the heating circuit to be controlled.
- Set the bus address on the first additional VR 90 remote control unit to "2".
- Set different, sequential bus addresses for any further remote control units. Take note of the VR 90 installation manual.

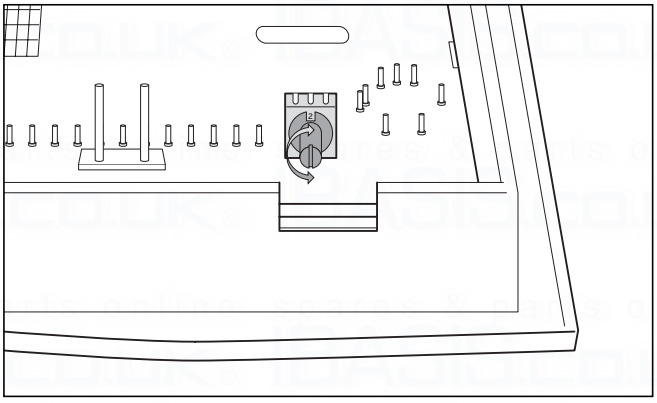

Fig. 6.14 Setting the bus address

6.9.2 Connecting further mixer circuits

Like the VR 90 remote control units, the VR 60 mixer modules also communicate with the heating controller via the eBUS. When installing, observe the same procedure as for connecting the remote control units (see Chap. 6.9.1).
The configuration of the system can be seen in Fig. 6.15. Pay attention to the installation manual for the expansion module.

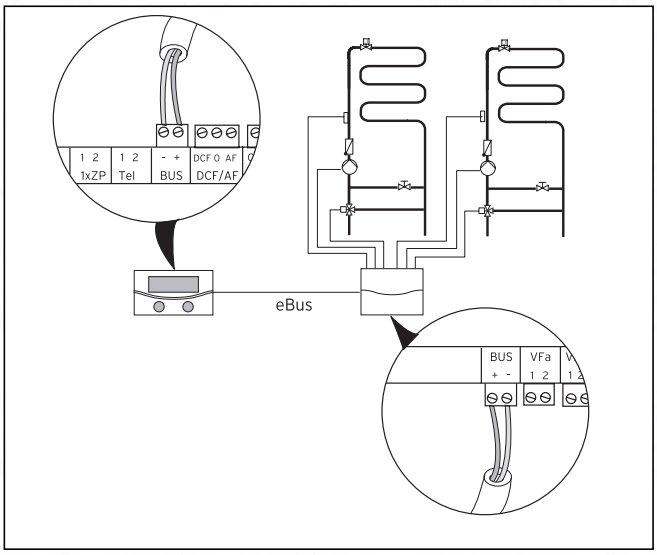

Fig. 6.15 Connecting further mixer circuits

6.9.3 Connecting vrnetDIALOG

The vrnetDIALOG communications unit (accessory) is fastened to the mounting plate provided on the frame of the operating console and connected to the controller PCB.

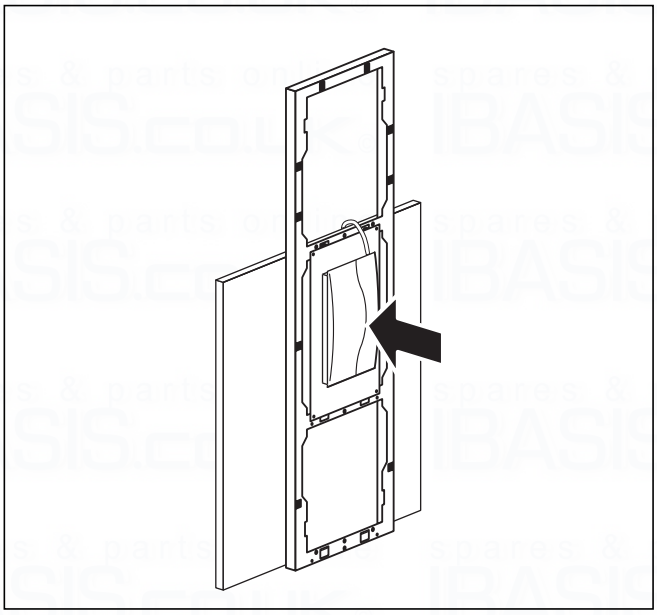

Fig. 6.16 Fitting vrnetDIALOG

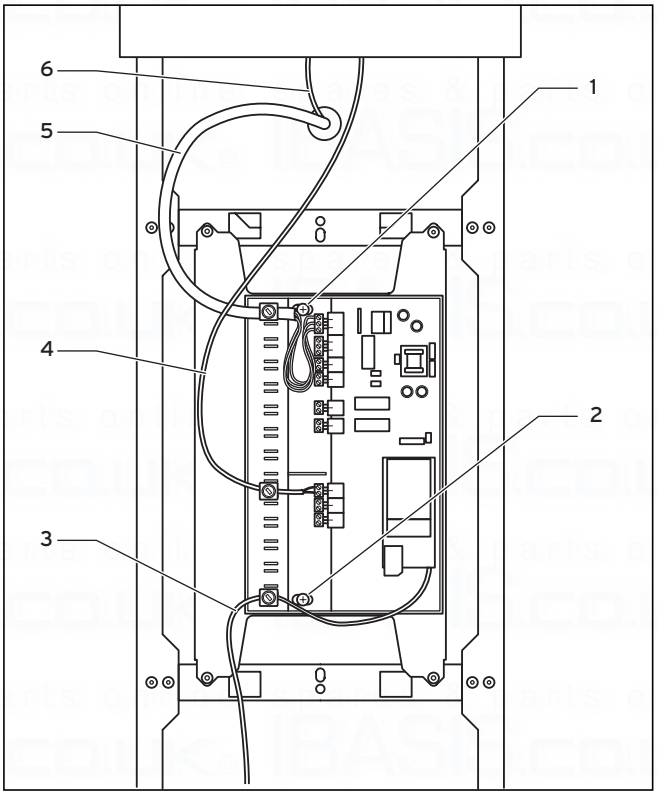

Fig. 6.17 Connecting vrnetDIALOG

- Fasten the casing of the vrnetDIALOG to the mounting panel of the operating console using the self-tapping screws (**1**) and (**2**) from the accessory bag. For fixing, see also the vrnetDIALOG manual.
- Pass the power supply cable present within the heat pump (**5**) through the opening in the upper front cladding and connect it to the vrnetDIALOG unit.
- Next pass the connecting cable (**6**) from the operating console through the opening in the upper front cladding and connect to it the adapter cable from the accessory pack (**4**) for connecting between the vrnetDIALOG unit and the heat pump.

The connector on the adapter cable is intended for the operating console; the second cable is intended for connection to the eBUS plug from the vrnetDIALOG unit.

Any other eBUS cables already present on the vrnetDIALOG unit are not required and can thus be removed.

- Now connect the aerial or telephone cable (**3**) to the vrnetDIALOG unit (see also the vrnetDIALOG manual). These cables must not be fed through the heat pump.

6.10 Connecting an external boiler

If your external boiler has a Vaillant eBUS interface, you can connect it to the heat pump eBUS via the VR 32 accessory (see also the VR 32 manual regarding this).

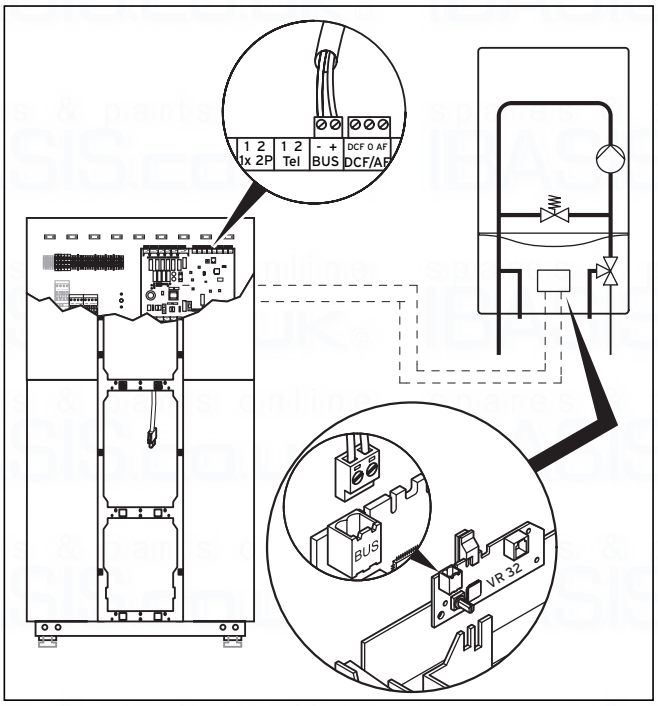

Fig. 6.18 Connecting to a boiler with an eBUS interface

Boilers without eBUS interfaces are connected to the internal auxiliary heating contact (ZH, see Fig. 6.6) via an isolating relay (accessory, Vaillant No. 306249).

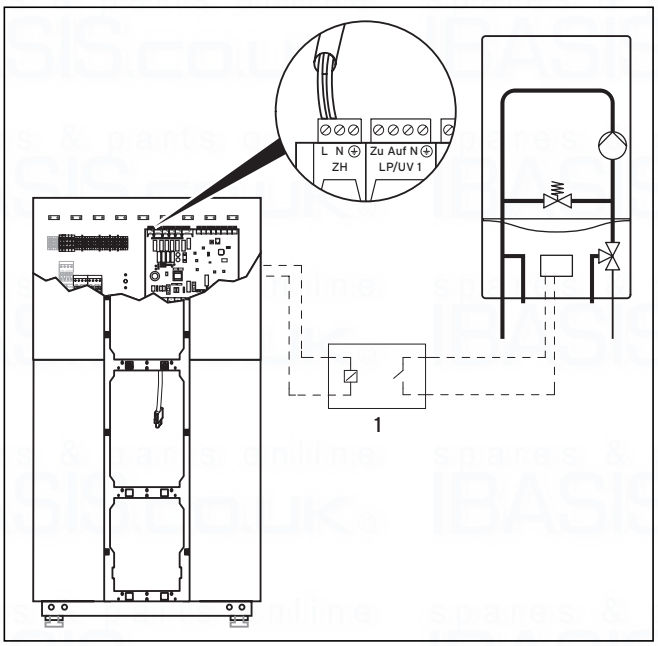

Fig. 6.19 Connecting to a boiler without an eBUS interface

Key to Fig. 6.19

1 Isolating relay (Accessory No. 306249)

In both cases, the heat pump switches in the external boiler depending on the heat demand and the controller setting. To do this, set the hydraulic connection in Menu C8 "Auxiliary heater 1".

6.11 Fitting the cladding and the operating panel

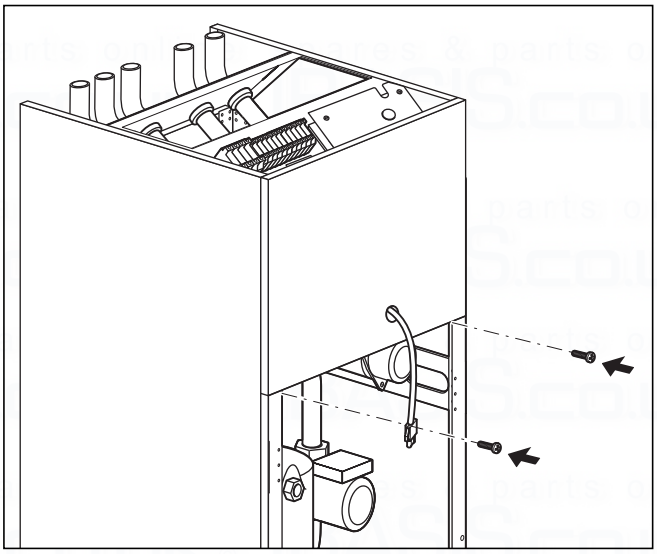

Fig. 6.20 Fitting the front upper cladding

- Feed the console connector through the opening in the front lower cladding panel and then press the panel into the spring retainer on the casing frame.
- Screw the cladding panel to the casing with the two screws, as shown in Fig. 6.3.

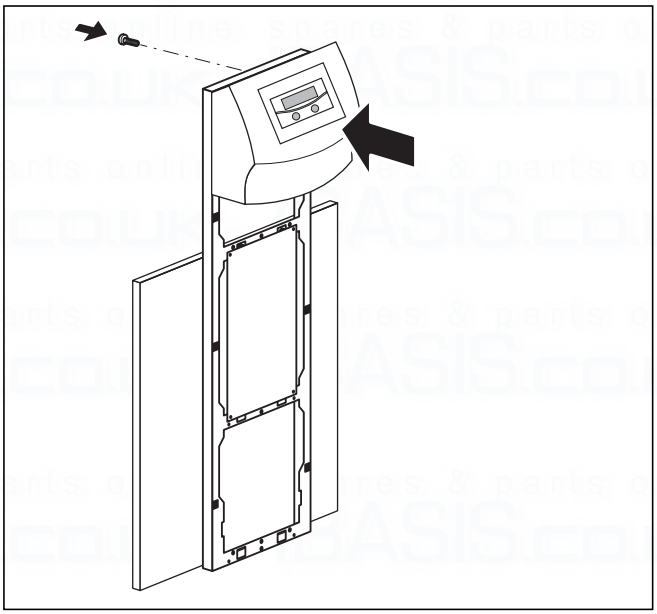

Fig. 6.21 Fitting the operating console

- If you have fitted the vrnetDIALOG communications unit, plug in the connecting plug and the control cable supplied in the heat pump accessory kit (see the vrnetDIALOG manual and Chap. 6.9.3).

Danger!
Risk of electric shock!
If the vrnetDIALOG accessory is not being used or does not receive its power supply from the heat pump, the vrnetDIALOG connecting plug (230 V supply) must remain secured inside the heat pump.

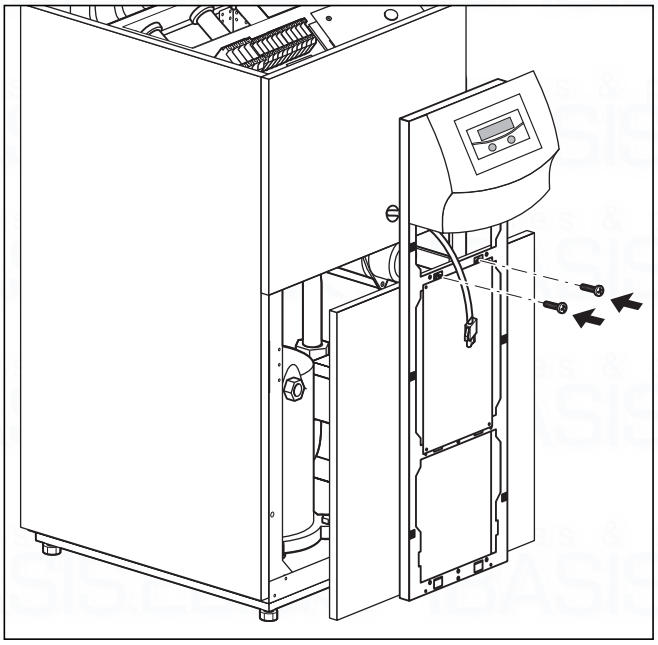

Fig. 6.22 Fitting the front lower cladding

- Press the lower cladding panel into the spring retainer on the casing and securely screw the console frame to the casing using the two screws, as shown in Fig. 6.5.

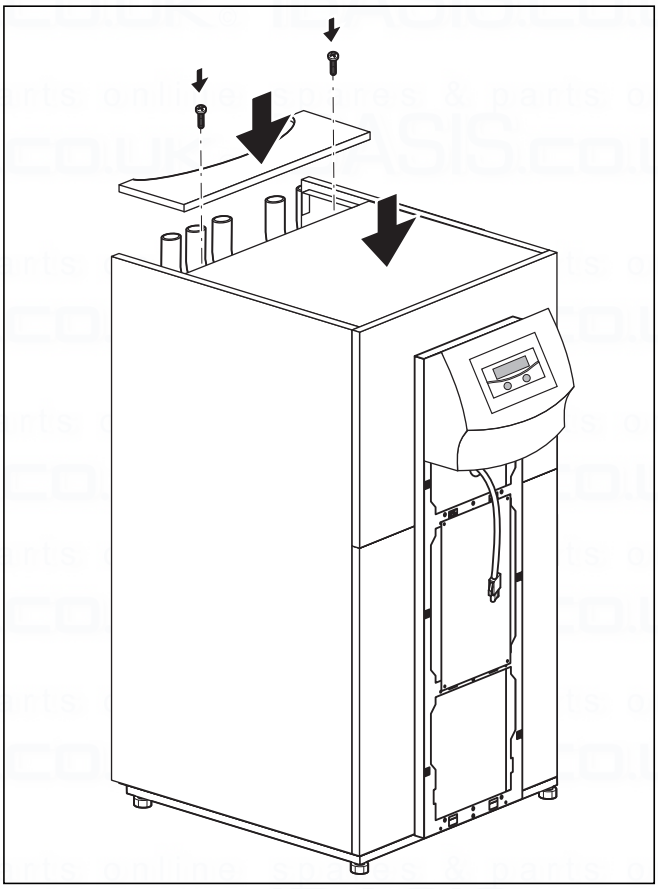

Fig. 6.23 Fitting the upper cover

- Attach the upper cover and screw it down securely with the two associated screws.
- Press the pipe access cover into the spring retainer.

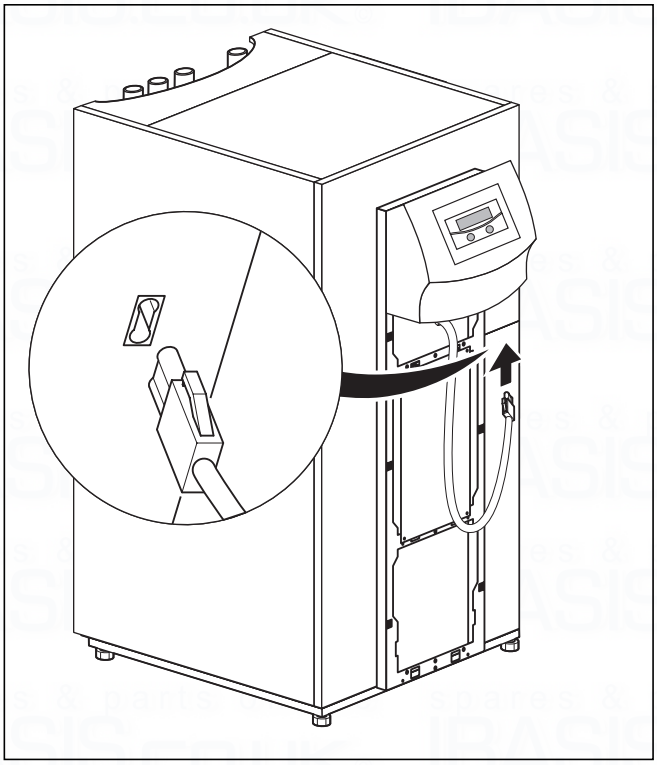

Fig. 6.24 Fitting and connecting the operating console

- Connect the connecting cable to the operating console.

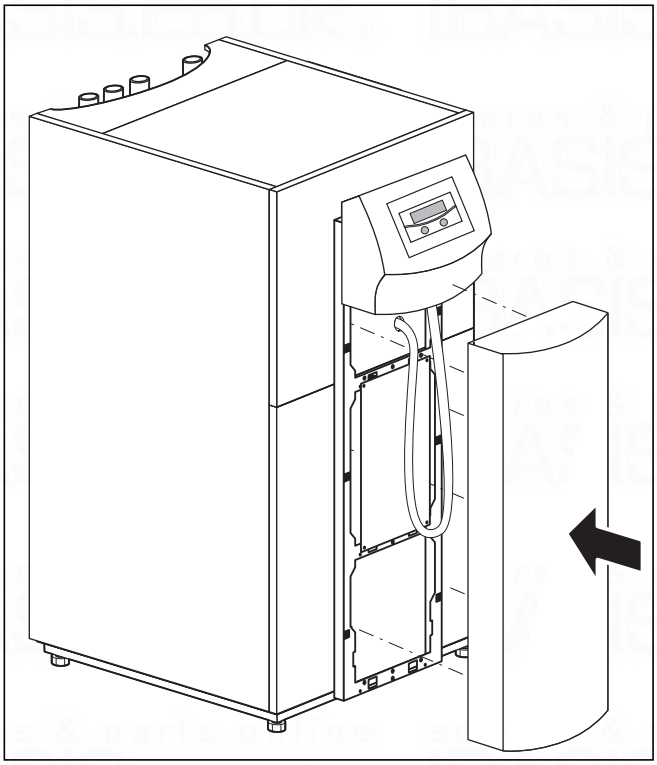

Fig. 6.25 Fitting the front panel of the operating console

- Insert the front panel of the operating console into the spring retainer on the console frame.

7 Start-up

Danger!
Risk of injury!
The heat pump may only be put into operation after all the cladding sections have been fitted.

7.1 General points regarding start-up

- Before putting the heat pump into operation, first check the Start-up Checklist in Chap. 14.

The heat pump may only be started if all the points noted there have been satisfied.

Before you actually start up the heat pump, familiarise yourself with the controller interface described below.

7.2 Operating the controller

7.2.1 Finding your way around the controller

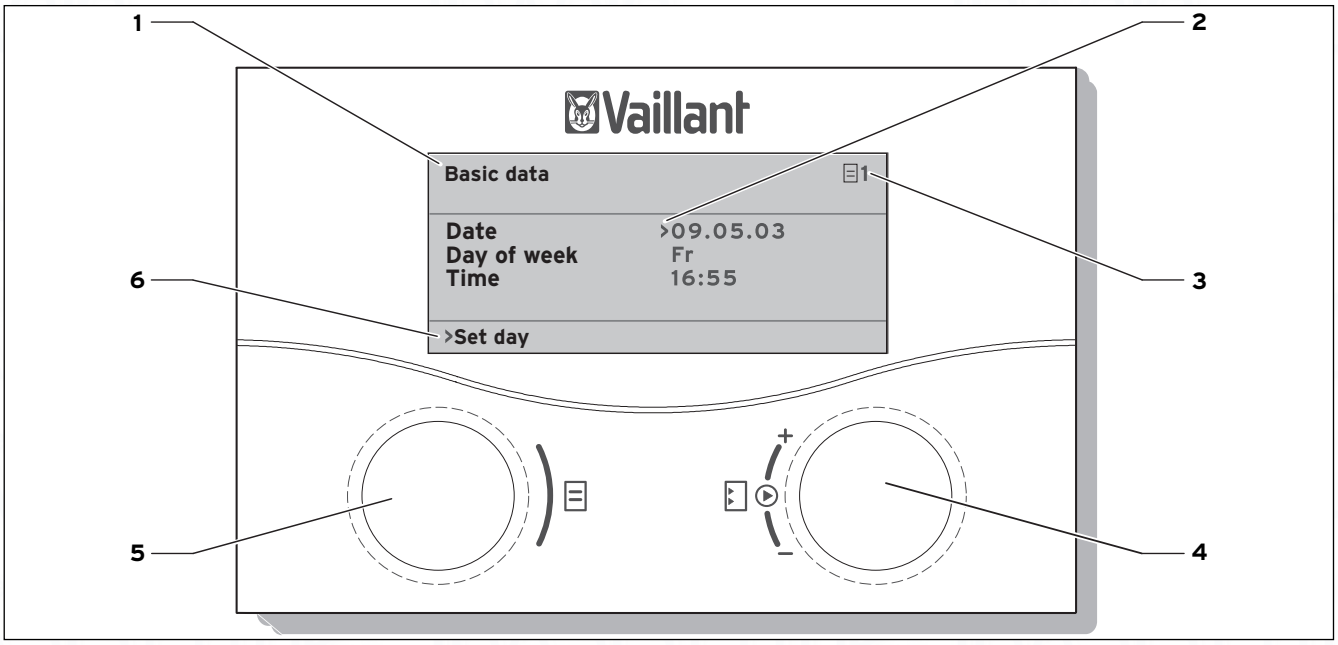

Fig. 7.1 Operating overview

Key

1 Menu name
2 Cursor indicating the selected parameter
3 Menu number
4 Dial ⊡,
Set parameter (turn). Select parameter (press)
5 Dial ⊟,
Select menu (turn). Activate special operating mode (press)
6 Line with information (in the example, an operation prompt)

7.2.2 Calling up the screens

The menus are identified by a number at the top right of the display. You can access the next menu by turning the ⊟ dial. The numbers make it easier to find individual menus during programming.

7.2.3 Typical operating sequence on the operator level

- Turn the ⊟ dial until the required menu is selected.

- Turn the ⊡ dial until the parameter to be changed is selected.

- Press the ⊡ dial to mark the parameter to be changed. The parameter will be highlighted on a dark background.

- Turn the ⊡ dial to change the set value of the parameter.

- Press the ⊡ dial to accept the new value.
- Repeat this sequence until all the settings have been made.

7.3 Carrying out the initial commissioning

As soon as the heat pump is supplied with power during the initial commissioning, an internal self-test starts automatically, whereby the heat pump checks itself and any connected components for functional capability. At the same, the sensor configuration is checked, the phase sequence of the AC supply is determined and the functioning of the sensors in use is checked.

If the self-test was not successful, an error message appears on the controller display (see Chap. 10, "Troubleshooting and diagnosis").

- Switch on the circuit breaker, so that the heat pump is supplied with power.

The heat pump starts, the controller software is initialised:

```
Vaillant

Loading...
```

Fig. 7.2 Controller being initialised

After a short time the controller is ready for operation and detects that this is an intial commissioning. During the initial installation the controller always starts with the Installation Assistant - Menu A1.

```
Installation                    A1
Language selection
Language                  >GB english

>Select
```

Fig. 7.3 Menu A1: Language selection

Change the language setting if necessary and turn the ⊟ dial to the next menu.

```
Installation Assistant          A2

Hydraulic plan                   0
Electroplan                      0

Accept change                   No
>Select
```

Fig. 7.4 Menu A2: Installation Assistant

The heat pump type has already been set at the factory and may not be changed!

Selecting the hydraulic plan

Caution!
Possible malfunctions.
Take care to select the correct hydraulic plan, as otherwise malfunctions can occur in the system.

- Turn the ⊟ dial until the cursor **>** points to the number that indicates **Hydraulic plan No.**
- Press the ⊡ dial. The parameter will be activated and displayed in inverse video.

- Turn the ⊟ dial until the hydraulic plan matching your system has been selected (see Table 7.1).
  You will find the hydraulic diagram for your installation in Chap. 6.7.2 ff.
- Press the ⊡ dial to confirm the selection.

Hydraulic plan No.	Buffer tank	CH circuit	DHW cylinder	Probe	Fig. No.
1		X		AF, VF2	6.8
2	X	X		AF, VF1, VF2, RF1	6.9
3		X	X	AF, SP, VF2	6.10
4	X	X	X	AF, SP, VF1, VF2, RF1	6.11

Table 7.1 Selecting the Hydraulic plan No.

Selecting the electroplan

- Turn the ⊟ dial until the cursor > points to the number of the electroplan.
- Press the ⊡ dial. The parameter will be activated and displayed in inverse video.
- Select
- Turn the ⊟ dial until the electroplan, "1", "2" or "3", matching your mains supply is selected (see Chap. 6.4):
  1 = Unblocked mains supply
  2 = Dual circuit feed, heat pump tariff
  3 = Dual circuit feed, special tariff

- Press the ⊡ dial to confirm the selection.

Adopting the settings

- Turn the ⊟ dial until the cursor > on the right of the "accept" menu entry points to NO.
- Press the ⊡ dial. The parameter will be activated and displayed in inverse video.
- Turn the ⊟ dial until "YES" appears.
- Press the ⊡ dial to confirm the selection.

Note!
A complete description of the displays (Menus A1 to A9) for the initial commissioning can be found in Table 8.4

- Make all the necessary settings and continue with the Installation Assistant to the end.

Installation completed	A9
Exit mode?	>yes
>Values can be set	

Fig. 7.5 Menu A9: Ending the installation

- Only set "Exit mode?" to "YES" if you are sure that everything has been set correctly.

Once you have confirmed with "YES", the controller switches to the graphics display. The heat pump starts under its autonomous control system.

7.4 Bleeding the brine circuit (VWS only)

To bleed the brine circuit, activate the "Brine bleeding" menu point in Menu A7. The brine pump now alternates between 50 minutes operation and 10 minutes standstill. Check whether the fluid level in the brine expansion tank has stabilised.

- Let the brine pump continue to run, so that the air trapped in the system can be collected in the expansion tank. The level of the fluid in the expansion tank falls as a result of the discharge of air and must be topped up again as described in Chap. 5.2.
- Open the expansion relief valve to allow any possible overpressure to discharge. The tank must be filled to 2/3 full with fluid.

7.5 Bleeding the heating circuit

- If manual switching of the heating circuit pump and the 3-way valve is necessary to bleed the heating circuit, perform this via Menu A5/A6 (see Table 8.4).

7.6 Handing the system over to the operator

- Instruct the operator of the system in the handling and function of all the equipment.
- Hand over all the instruction manuals and documents for the appliance to the operator for safe keeping.
- Tell the operator to keep the manuals nearby the controller. Inform the owner of the need for regular inspection of the system.

8 Controller

To operate the heat pump economically, it is important to match the control system to the customer's heating system and to the pattern of use.
In the following chapter, all the functions of the weather-controlled energy balance controller will be explained.

8.1 Operating modes and functions

There are five operating modes available for the heating circuit:
- **Auto:** the operation of the heating circuit alternates between the "Heating" and "Energy saving" modes in accordance with a preset timer programme.
- **Eco:** the operation of the heating circuit alternates between the "Heating" and "Off" modes in accordance with a preset timer programme. The heating circuit is switched off during the set-back period provided the frost protection function (which depends on the outside temperature) is not activated.
- **Energy saving:** the heating circuit is operated at the set-back temperature independently of any preset timer programme.
- **Heating:** the heating circuit is operated at the flow temperature setpoint independently of any preset timer programme.
- **Off:** the heating circuit is out of operation, provided that the frost protection function (which depends on the external temperature) is not activated.

The "Auto", "On and "Off" operating modes are available for connected domestic hot water cylinders:
- **Auto:** the commands for recharging the cylinder or enabling the circulating pump are given according to a preset timer programme.
- **On:** recharging is constantly enabled, i.e. the cylinder is immediately re-heated when needed, and the circulating pump is constantly in operation.
- **Off:** the cylinder is not heated and the circulation pump is not in operation. Only when the storage tank temperature falls below 10 °C is the storage tank reheated to 15 °C for frost protection reasons.

8.2 Automatic auxiliary functions

Frost protection
The controller is equipped with a frost protection function. This function ensures that the heating system is protected from frost in all operating modes.
The set-back temperature is pre-set automatically for each heating circuit if the outside temperature falls below 3 °C.

Cylinder frost protection
This function starts automatically if the current DHW temperature falls below 10 °C. The cylinder is then heated to 15 °C. This function is also active in the "Off" and "Auto" operating modes, regardless of the timer programmes.

Checking the external sensors
The necessary sensors are configured using the basic hydraulic circuit that you specified during the initial commissioning. The heat pump constantly checks automatically that all sensors are installed and functioning.

Protection from loss of heating water
An analogue pressure sensor monitors for any potential loss of water and switches the heat pump off if the water pressure is below 0.5 bar gauge pressure, and on again when the water pressure is above 0.7 bar gauge pressure.

Pump blocking and valve blocking protection
To prevent the heating, circulation or brine pumps, or the hot water diverter valve UV1, from seizing, those pumps and the valve that have not been in operation for the last 24 hours are turned on in sequence for approximately 20 seconds every day.

Protection against loss of brine (VWS only)
An analogue pressure sensor monitors for any loss of brine and switches the brine pump off if the brine pressure falls even once below 0.2 bar gauge pressure and Error 91 is displayed in the error memory.
The heat pump switches on again when the brine pressure rises above 0.4 bar gauge pressure.
A warning message appears in Menu 1 if the brine pressure falls below 0.6 bar gauge pressure for longer than one minute.

Floor protection switching for all hydraulic systems without a buffer cylinder (e.g. for Hydraulic Plans 1 and 3)
If the heating flow temperature in the underfloor heating circuit measured by sensor VF2 continuously exceeds a value of (max. HK temp. + compressor hysteresis + 2 K, default setting: 52 °C) for longer than 15 Minuten, the heat pump switches off with error message F.72 (see Chap. 10.6). The heat pump switches on again when the flow temperature has fallen below this value and the error has been reset.
The maximum heating flow temperature can be changed via vrDIALOG with the "Maximum heating circuit temperature" parameter.

Caution!
Risk of damage to the floor.
Only set the value for the floor protection circuit high enough that heated floors are not damaged by excessively high temperatures.

Phase monitoring
The sequence and presence of the phases (clockwise rotating field) of the 400 V supply are checked at the initial commissioning and continuously checked during operation. If the sequence is not correct or if one phase drops out, a fault-induced shutdown of the heat pump takes place to prevent damage to the compressor.

Freezing protection function
The outlet temperature of the heat source is measured continuously. If the heat source outlet temperature falls below a defined value, the compressor switches off temporarily with error message 20 or 21 (see Chap. 10.4). If these errors appear three times in succession, a fault-induced shutdown takes place (see Chap. 10.5).
You can set the value (default setting - 10 °C) for the freezing protection for geoTHERM VWS heat pumps in Installation Assistant A4.
A value of + 4 °C is factory set for geoTHERM VWW heat pumps. This value cannot be changed.

8.3 Settable auxiliary functions

You can set the following auxiliary functions from the controller yourself and thus adapt the system to local circumstances or the operator's wishes.

Note:
Operation of the controller is sub-divided into three levels:
- Operator level -> for the operator
- Code level -> for the expert technician
- vrDIALOG -> for the expert technician

8.3.1 Auxiliary functions in the Operator Level:

Time programme
You can set the heating times for each heating circuit. You can store up to three heating periods per day or per block (Block = Mon - Fri or Mon - Sun or Sat - Sun).
See Table 8.3, Menu 3 "Timer programs".

Holiday programming
You can programme two holiday periods with date entry. You can additionally define the set-back temperature to which the system should be regulated during the period of absence.
See Table 8.3, Menu 4 "Holiday programming".

Party function
The party function permits you to extend the current heating and hot water periods beyond the next switch-off time, to the start of the next heating period.
See Chap. 8.9.

Energy-saving function
This function allows you to set back the heating for an adjustable period of time.
See Chap. 8.9.

Cooling
Cooling mode is only possible when using the VWZ NC 14/17 accessory, and only for VWS 14 and VWS 17 heat pumps. More detailed information about this can be found in the installation manual for the VWZ NC 14/17 accessory.

8.3.2 Auxiliary functions in the Code Level:

Floor drying
You can dry out a freshly laid screed floor using this function in accordance with Table 8.1. The flow temperature corresponds to a routine stored in the controller and is independent of the outside temperature. All the selected operating modes are interrupted when this function is activated. See Table 8.4, Menu C6.

Day after starting the function	Target flow temperature for this day
Starting temperature	25 °C
1	25 °C
2	30 °C
3	35 °C
4	40 °C
5 – 12	45 °C
13	40 °C
14	35 °C
15	30 °C
16	25 °C
17 – 23	10 °C (frost protection function, pump in operation)
24	30 °C
25	35 °C
26	40 °C
27	45 °C
28	35 °C
29	25 °C

Table 8.1 Progress of the screed floor drying

The operating mode is displayed together with the current day and the target flow temperature. The current day can be set manually.
If the brine circuit is not yet finished, the drying of the screed floor can be accomplished by means of the auxiliary heating. In order that the drying of the screed floor can take place by means of the auxiliary heating, select the value "**ZH only**" for the "Heating mode" parameter in Menu C7, "Auxiliary heating".

Caution!
Overloading of the heat source!
If too much energy is extracted from the heat source while drying out a floor (e.g. in the winter months), the source can be overloaded and its regeneration impaired.

When the function is started, the current time of the start is saved. The day is changed exactly at this time. After network-off/-on, the floor-drying begins as follows:

Last day before mains off	Start after mains on
1 - 15	1
16	16
17 - 23	17
24 - 28	24
29	29

Table 8.2 Progress of the screed floor drying following mains off/on

If you do not wish to carry out the drying with the specified temperatures and/or times, you can specify variable flow temperature setpoints by means of fixed value controlling (see following section). When doing this, take note of the applicable compressor hysteresis (settable via vrDIALOG, see Chap. 8.10).

Legionella protect
The purpose of the "Legionella protect" function is to kill off germs in the DHW tank and in the pipes.
Once a week, the domestic hot water cylinder is raised to a temperature of approx. 70 °C.
The expert technician activates the "Legionella protect" function in the Code level and there can set a starting time and a starting day (weekday) on which the heating is to take place (see Table 8.4, Menu C9).

Remote parameter setting/alerting/diagnostics
It is possible to diagnose and adjust the heat pump by remote commands via vrDIALOG 810/2 or vrnetDIALOG 840/2 or 860/2. You will find more detailed information on this in the respective manuals.

8.3.3 Auxiliary functions via vrDIALOG:
Using its computer-supported graphics visualisation and configuration, vrDIALOG 810/2 (eBUS) enables you to optimise heating appliances and control systems and thus make use of their energy saving potential. Both of them enable you to create a visual impression of the processes in your control system and influence them at any time. The programmes enable you to record and graphically prepare system data, to load device configurations and change and save them online and to save information in the form of reports.
Using vrDIALOG 810/2, you can make all the settings for the heat pump as well as other settings for optimisation. See Chap. 8.10.

Acceleration mode
This operating mode simplifies the diagnosis of heat pump functions by speeding up the energy balancing in hydraulic plan 1 or 3 by a factor of 60. It is used as a test function.
See Chap. 8.10.

Fixed value controlling
Using this function you can set, via vrDIALOG, a fixed flow temperature independently of the weather-controlled control system. See Chap. 8.10.

8.4 Description of the controller

8.4.1 Possible system circuits
The controller can control the following system circuits:
- one heating circuit,
- one indirectly heated hot water cylinder,
- one hot water circulation pump,
- one buffer circuit.

To expand the system, you can, with the aid of a buffer circuit, connect up to six additional VR 60 mixer circuit modules (accessories), each with two mixer circuits.
The mixer circuits are programmed via the controller in the heat pump operating console.

For convenient operation, you can connect the VR 90 remote control unit for the first eight heating circuits (see Chap. 4.13).

8.4.2 Energy balance control
Energy balance control is applicable only to hydraulic systems without buffer cylinders (e.g. Hydraulic Plans 1 and 3).
For economical and fault-free operation of a heat pump, it is important to regiment the starting of the compressor. The start-up of the compressor is the point at which the highest loading occurs. Using the energy balance controller it is possible to minimise the number of heat pump start-ups without having to forgo the convenience of a comfortable room environment.
As with other weather-controlled heating controllers, the controller first measures the outside temperature and then determines a flow temperature setpoint by means of a heating curve. The energy balance calculation is made on the basis of this flow temperature setpoint and the current temperature in the heating circuit - the difference per minute is measured and totalised:

1 degree minute [°min] = 1 K temperature difference in the course of 1 minute

The heat pump starts up at a defined heat deficit (selectable on the controller, see Menu C4) and only switches off again when the supplied heat is equal to the heat deficit.
The larger the preset negative numerical value is, the longer the periods for which the compressor is kept running or at standstill.

8.4.3 Buffer cylinder charging principle

The buffer cylinder is controlled depending on the setpoint flow temperature. The heat pump heats when the temperature measured by the sensor at the top of the buffer cylinder, VF1, is lower than the setpoint temperature. It heats until the temperature measured by the sensor at the base of the buffer cylinder, RF1, has reached the setpoint temperature plus 2 K.
With reference to heating the DHW cylinder, the buffer cylinder is likewise heated when the temperature of the sensor at the top of the cylinder, VF1, is less than 2 K above the setpoint temperature (early reheating):
VF1 < T VL setpoint + 2 K.

8.4.4 Resetting to factory settings

Caution!
Inadvertent deletion of specific settings!
When you reset the control system to the default settings, specific system settings can be deleted and the system can sut down. The system cannot be damaged.

- Press both dials simultaneously for at least 5 seconds in the top-level display of the graphics display.

After that you can select whether to reset only the timer programs, or all values, to the default settings.

8.4.5 Controller organisation

The **top level display** is a **graphics display**. It is the starting point for all the available screens. This display reappears automatically if you do not actuate any of the dials for a long time when setting values.

In the following illustrations you can see all the controller screens in an overview in the form of a flow chart. You will find descriptions of the individual screens in the sections that follow them.

Controller operation is subdivided into three levels:
The Operator level is intended for the operator.
The Code level (Menus C1 - C9, D1 - D5, I1 - I5 and A1 - A9) is reserved for the specialist and is protected against unintentional adjustments by means of a code input.
The following parameters can be displayed in the individual menus, but the values cannot be changed if no password is entered, i. e. access to the code level is disabled.
In Menus C1 to C9 you can set parameters for the various functions of the heat pump for the heating circuit.
In Menus D1 to D5 you can operate and test the heat pump in diagnostic mode.
In Menus I1 to I5 you can obtain general information regarding the settings for the heat pump.
In Menus A1 to A9 you are guided through the installation menu during the initial commissioning of the heat pump.
Furthermore it is possible to display and select special functions, such as the energy saving function. To do this, press the dial once , twice, or three times, starting from the top-level display (see Fig. 8.1).
The third level contains functions for optimising the system and can only be set by a specialist using vrDIALOG 810/2 (see Chap. 8.10).

8.5 Operator level sequence diagram

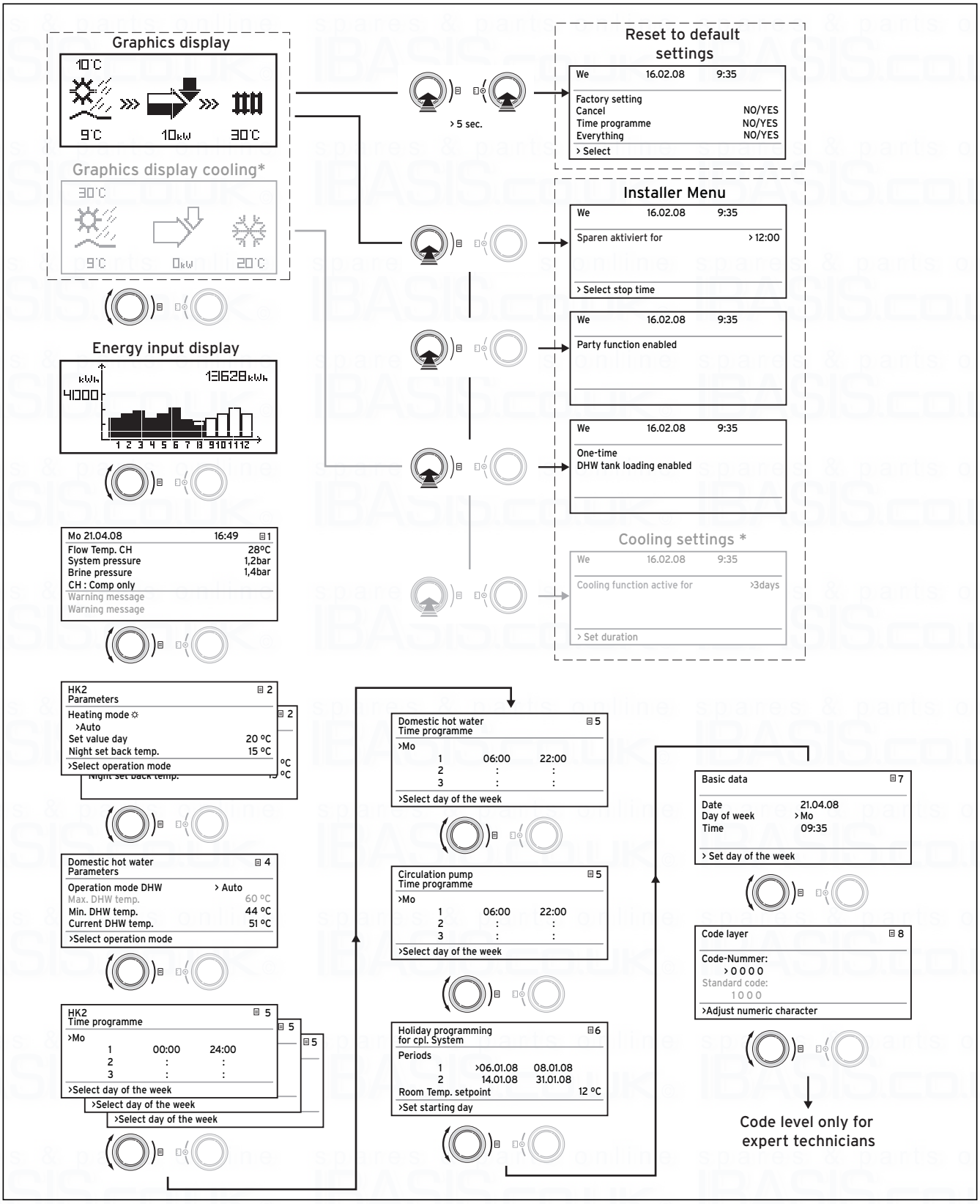

*) Displays shown in grey are dependent on the hydraulic plan selected

Fig. 8.1 Displays in the Operator level

8.6 Code level sequence diagram

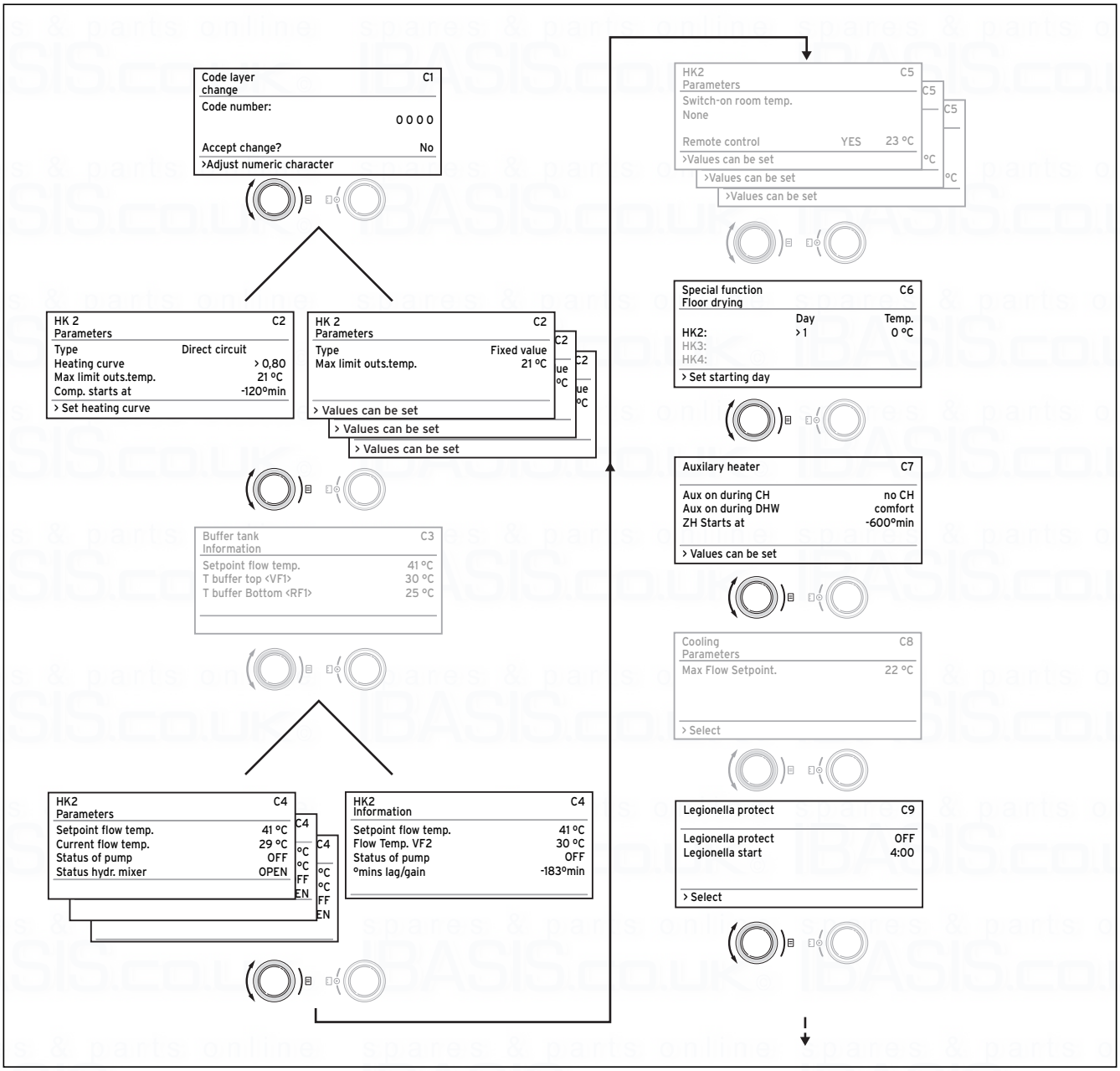

*) Displays shown in grey are dependent on the hydraulic plan selected

Fig. 8.2 Displays in the Code level

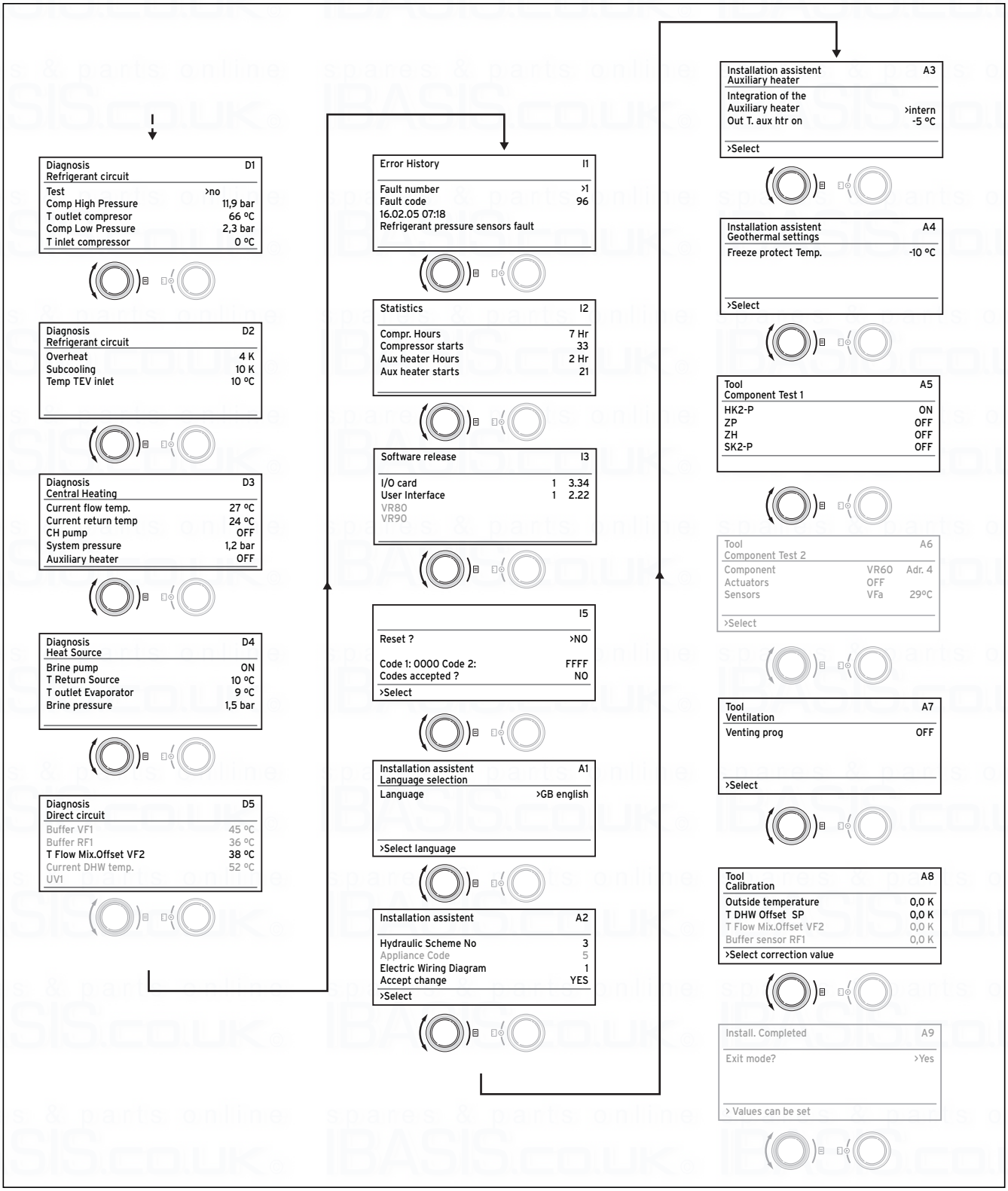

*) Displays shown in grey are dependent on the hydraulic plan selected

Fig. 8.3 Displays in the Code level (cont.)

8.7 Displays in the operator level

Display shown	Description
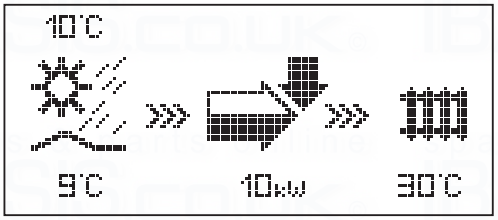	**Graphics display (Top-level display)** You can read off the instantaneous state of the system from this display. This will always be shown if you have not actuated either of the dials for a long time while another display is showing. Outside temperature (here 10 °C) Source inlet temperature: temperature sensor T3; 9 °C in the example (see Figs. 1 and 2 in the appendix) The output of the heat source is displayed under the arrow (10 kW in the example). The degree of darkening of the arrow provides a graphical representation of the energy efficiency of the pump under the specified operating conditions. The output of the heat source should not be equated with the heating output. The heating output corresponds approximately with the output of the heat source + the compressor output When the compressor or the electric auxiliary heating is switched on, the arrow is shown filled. **>>>** Left and right flash when the compressor is switched on and energy is consequently being taken from the environment and fed to the heating system. **>>>** Right flashes when energy is being supplied to the heating system (e.g. only from the electric auxiliary heating). The heat pump is in the CH mode. The heating flow temperature is also displayed (30 °C in the example). The symbol indicates that the domestic hot water cylinder is being heated or that the heat pump is in the ready state. The temperature in the domestic hot water cylinder is also displayed. This symbol indicates that the heat pump is in cooling mode. The current heating flow temperature is displayed below the symbol (20 °C in the example). **Note**: Cooling mode is only possible when using the VWZ NC 14/17 accessory, and only for VWS 14 and VWS 17 heat pumps.

Table 8.3 Parameters that can be set in the Operator level

Display shown	Description
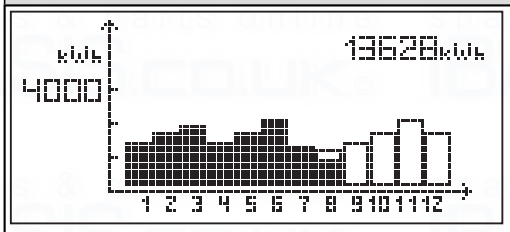	**Energy input display** Shows the energy extracted from the environment for each of the 12 months of the current year (black bar). White-filled bars represent the future months of the year; the height of the bar corresponds to the yield for the month in the previous year (to permit comparison). On commissioning, the height of the bars is zero for all months, as no information is available yet. The scaling (in the example, 4000 kWh) adapts automatically to the month's highest value. The total amount of the environmental yield since start-up is displayed at top right (in the example: 13628 kWh).
Mo 21.04.08 16:49 1 Current flow temp. 28 °C CH pressure 1.2 bar Brine pressure 1.4 bar CH : comp. only. Warning message Warning message	The day of the week, the date, the time of day and also the flow temperature, the heating system pressure and the heat source pressure are displayed. **Current flow temp.**: Current flow temperature in the unit. **CH pressure**: Heating circuit pressure sensor. **Brine pressure**: Heat source pressure (Pressure sensor for heat source circuit; brine pressure) **CH : comp. only**: this status message gives information about the current operating status. Possible messages are: CH: comp. only. CH: Comp+Aux CH: aux only CH: Comp&aux off DHW: Comp&aux off DHW: Comp only DHW: aux only Peak Rate: DHW Peak Rate: Stand-by Acceleration mode Frost prot. Heating Frost prot. Cylind. Legionella protect. Automatic pump spin Floor drying Venting mode Lockout: Forced CH Shutdown: Forced CH Lockout: Forced DHW Shutdown: Forced DHW Malfunction Blocking error Operation interlock CH Comp overrun DHW Comp overrun Cooling & DHW CH return too high In critical operating conditions, a warning message is displayed on the two lower lines of the display. These lines are clear when the operating condition is normal.

Table 8.3 Parameters that can be set in the Operator level (cont.)

Display shown	Description	Factory setting
<HK2> 2 Parameters Heating mode >Auto Set value day 22 °C Night set back temp. 15 °C >Select operation mode	The **Set value day** is the temperature at which the heating is to regulate in the "Heating" mode or during the time window. The **set-back temperature** is the temperature to which the heating is regulated during the set-back period. Each heating circuit can be set to its own set-back temperature. The selected operating mode determines under what conditions the assigned heating circuit or hot water circuit is to be controlled. The following operating modes are available for heating circuits: **Auto:** the operation of the heating circuit alternates between the "Heating" and "Energy saving" modes in accordance with a presettable timer programme. **Eco:** the operation of the heating circuit alternates between the "Heating" and "Off" modes in accordance with a presettable timer programme. The heating circuit is switched off during the set-back period provided the frost protection function (which depends on the outside temperature) is not activated. **Heating:** the heating circuit is operated at the target room temperature independently of any presettable timer programme. **Energy Saving:** the heating circuit is operated at the set-back temperature independently of any presettable timer programme. **Off:** the heating circuit is off when the frost protection function (dependent on the external temperature) is not activated. **Note:** Additional heating circuits are displayed, depending on the system configuration.	Set value day: 20 °C Set-back temp.: 15 °C

Table 8.3 Parameters that can be set in the Operator level (cont.)

Display shown	Description	Factory setting
DHW 4 Parameters Hot water mode >Auto Max. DHW temp. 60 °C Min. DHW temp. 44 °C Current DHW temp. 51 °C Select flow temperature	The auto, on, and off operating modes are possible for the connected domestic hot water cylinders and the circulation circuit: The **maximum DHW temperature** determines the temperature to which the domestic hot water cylinder should be heated. The **minimum DHW temperature** determines the limit below which the domestic hot water cylinder is heated. **Note:** The maximum DHW temperature is only displayed when the auxiliary hot water heating is enabled (see Menu C7). Without electric auxiliary heating, the DHW temperature is limited by the pressure sensor control shut-off in the cooling circuit and cannot be adjusted! **Current DHW temp.**: Current temperature in the domestic hot water cylinder	Min. hot water temp. 44 °C
<HK2> 5 Time programme >Mo 1 00:00 24:00 2 : : 3 : : >Select day of the week	You can set the heating times for each heating circuit in the **HK2 timer program** menu. Up to three heating times can be programmed per day or block. The control system operates according to the heating curve and the room setpoint temperature.	Mon – Fri 0:00 – 24:00
DHW loading 5 Time programme >Mo 1 06:00 22:00 2 : : 3 : : >Select day of the week	You can set the times at which the domestic hot water cylinder is heated in the **DHW timer program** menu. Up to three times can be programmed per day or block.	Mon – Fri 6:00 – 22:00 Sat 7:30 – 23:30 Su. 7:30 – 22:00
Circulation pump 5 Time programme >Mo 1 06:00 22:00 2 : : 3 : : >Select day of the week	You can set the times at which the circulation pump is to be operational in the **Circulation pump timer program** menu. Up to three times can be programmed per day or block. If the hot water mode (see Menu 3) is set to "ON", the circulation pump runs constantly.	Mon – Fri 6:00 – 22:00 Sat 7:30 – 23:30 Su. 7:30 – 22:00

Table 8.3 Parameters that can be set in the Operator level (cont.)

Display shown	Description	Factory setting
Holiday programming for cpl. System ⊟ 6 Periods 1 >06.01.08 08.01.08 2 14.01.08 30.01.08 Room Temp. setpoint 12 °C >Set starting day	It is possible to program two holiday periods by specifying the dates for the controller and all system components connected to it. In addition, you can set the desired target room temperature for holidays here, i.e.independently of the preset timer program. After the holiday time has elapsed, the controller automatically goes back to the previously selected operating mode. The holiday program can be activated only in auto and eco operating mode. Connected cylinder charging circuits or circulation pump circuits are automatically switched to OFF operating mode during the holiday time program.	Period 1: 01.01.2003 – 01.01.2003 Period 2: 01.01.2003 – 01.01.2003 Room Temp. setpoint 15 °C
Basic data ⊟ 7 Date 21.04.08 Day of week Mo Time 09:35 >Values can be set	In the **Basic data** menu, you can set the current **date**, the **day of the week** and, if no DCF radio reception is possible, the current **time** for the controller. These settings apply to all connected system components.	
Code layer ⊟ 8 Code number: >0 0 0 0 Standard code: 1 0 0 0 >Adjust numeric character	To access the **Code layer** (Technician level), enter the appropriate Code (standard code 1000) and press the right hand dial⊟. To view set values without entering the code, you must press the ⊟ dial once. You can then view all parameters of the code level by turning the dial ⊟but not change them. **Security function:** Your code entry is reset again 15 minutes after your last change in the Code level (actuation of one of the dials). To gain entry to the Code level again after that, you will have to enter the code once more.	1000

Table 8.3 Parameters that can be set in the Operator level (cont.)

8.8 Displays in the code layer

The Code layer has different areas in which you can change parameters or merely view them, depending on the context. The context can always be recognised from the menu name.
Menu C: Set parameters for the heating system
Menu D: Perform diagnostics
Menu I: Display general information
Menu A: Installation Assistant
Your code entry is reset again 15 minutes after your last change in the Code level (actuation of one of the dials). To gain entry to the Code level again after that, you will have to enter the code once more.

Display shown	Description	Factory setting
Menu C: Set parameters for the heating system	In Menus C1 to C9 you can set the parameters for the various functions of the heat pump.	
Code layer change C1 Code number: >0 0 0 0 Accept change? No >Adjust numeric character	Menu for changing the code number. You can replace the standard code 1000 with a user-defined four-digit code here. **Note:** If you change the code, make a note of the new code, otherwise you will not be able to make any more changes in the code level!	1000
<HK2> C2 Parameters Type direct circuit Heating curve 0.80 Max limit outs.temp. 21 °C Comp.start at -120 °min >Values can be set	**Type:** Direct circuit (for direct hydraulics), Mixer circuit (for buffered hydraulics), Fixed value (can only be set via vrDIALOG 810/2). **Heating curve:** Adjustable heating curve (not with fixed value). **Maximum limit outside temperature**Temperature limit for switching off heating mode (summer function). **Comp.Start:** Set the degree minutes until compressor start (only with direct hydraulics)	0.3 22 °C
<HK2> C2 Parameters Type Fixed value Max limit outs.temp. 21 °C >Values can be set	This display appears if "Fixed value" has been set via vrDIALOG 810/2. If a VR 60 is connected, this menu appears several times (for each heating circuit).	
Buffer tank C3 Information Setpoint flow temp. 41 °C T buffer top <VF1> 29 °C T Buff.Bot RF1 25 °C	This display is only shown when a buffer cylinder is used (e.g. Hydraulic Plans 2 and 4). **Setpoint flow temp.:** Target flow temperature **T buffer top VF1:** Temperature at the buffer cylinder top sensor VF1 **T buffer bottom RF1:**Temperature at the buffer cylinder bottom sensor RF1 (see Section **8.4.3)**	

Table 8.4 Parameters that can be set in the Code level

Display shown	Description	Factory setting
<HK2> C4 Information Setpoint flow temp. 41 °C Flow temp. VF2 30 °C Status of pump Off Actual °mins lag/gain -183 °min <HK2> C4 Parameters Setpoint flow temp. 41 °C Flow temp. VF2 29 °C Status of pump Off Status hydr. mixer Open	The lower menu is only displayed when a buffer cylinder is used (e.g. Hydraulic Plans 2 and 4, and possibly on more than one occasion when a VR 60 is used). In the direct heating mode (e.g. Hydraulic Plans 1 and 3), the upper display is shown. **Setpoint flow temp.:** Setpoint flow temperature for the heating circuit **Flow temp. VF2:** Current flow temperature VF2. **Actual °mins lag/gain:** The energy integral is the cumulative difference between the VF2 flow temperature and the target flow temperature per minute. The heat pump starts when the energy deficit is at a defined level (see Energy balance control, Chap. 8.4.2) **Status of pump:** indicates whether the pump is turned on or off (ON/OFF). **Status hydr. mixer:**Caution!The OPEN/CLOSED indication describes the direction in which the control system is driving the mixer. If the mixer is not activated, OFF appears. If a VR 60 is connected, the lower menu appears several times (for each heating circuit).	
<HK2> C5 Parameters Switch-on room temp. None Remote control: Yes 23 °C >Values can be set	Only when using the VR 90 / VR 80 remote control: **Switch-on room temperature:** **None** = Room temperature from the remote control is not taken into account. **Switch on** = In addition to the selected heating curve, the heating flow temperature is also affected by the difference between the setpoint and current room temperatures. **Thermostat** = The room temperature from the VR 90 is used directly for controlling - i.e., the function of a room thermostat. **Remote control:** Automatically indicates whether a VR 90 remote control unit is connected (YES/NO). If YES, the room temperature measured by the VR 90 is also displayed. This menu occasionally appears on more than one occasion (for each heating circuit).	None
Special function C6 Floor drying Day Temp. HK2: >1 0 °C HK3: HK4: >Set starting day	You can select the starting day for **floor drying**; the flow temperature setpoint is automatically called up in accordance with the floor drying function (daily values 25/30/35 °C), see Chap. 8.3 "Settable auxiliary functions". It takes approx. 20 seconds for the actual value to be displayed! Deactivating the floor drying function: set to Day "0". Depending on the configuration of the heating system, the display will indicate for other heating circuits if required.	0

Table 8.4 Parameters that can be set in the Code level (cont.)

Display shown	Description	Factory setting
Auxiliary heater C7 Aux on during CH no CH Aux on during DHW comfort CH start at -600 °min >Values can be set	**Aux on during CH** **no CH:** CH blocked. **comfort** CH enabled, dependent on Out T. aux htr on and °mins lag/gain. **CH only:** Heating mode by means of auxiliary heating only, e.g. in emergency operation **Hot water operation** **no CH:** CH blocked **comfort** Auxiliary heating supplies the temperature level that the compressor cannot provide (approx. > 58 °C cylinder temperature) **CH only:** DHW heating by means of auxiliary heating only, e.g. in emergency operation (if "no CH" was previously activated, a max. DHW temp. of approx. 58 °C applies; if "CH" was activated, the max. DHW temp set in C6 applies **CH start at:** Setting the degree minutes until the auxiliary heating starts, added to the degree minutes for compressor start. Example: -600°min plus -120°min => start at -720°min. Out T. aux htr on: The auxiliary heating is only enabled for post-heating in heating mode below this temperature (can be set in Menu A3).	no CH no CH
Cooling C8 Max Flow Setpoint. 22 °C >Select	The menu is only displayed for hydraulics with cooling mode. **Flow temperature:** Display of target flow temperature The value can be changed. Cooling mode is only possible when using the VWZ NC 14/17 accessory, and only for VWS 14 and VWS 17 heat pumps.	20°C
Legionella protect C9 Parameters Legionella protect Off Legionella protect time 04:00 >Select	**Legionella protect:** OFF/Mo/Tu/We/Th/Fr/Sa/Su **Legionella protect time:** The preset time of day determines when the anti-Legionella function will start. The anti-Legionella function is carried out by the auxiliary heating on the preset day of the week, at the preset time, if the auxiliary heating has been activated. For this purpose, the controller sets the flow setpoint to 76 °C/74 °C (2K hysteresis). The anti-Legionella function is terminated when the current flow temperature at the cylinder has reached 73 °C for a duration of at least 30 min, or after 90 minutes if 73 °C is not reached (e.g., if hot water is drawn during this period).	Off 04:00

Table 8.4 Parameters that can be set in the Code level (cont.)

Display shown	Description	Factory setting
Menu D: Perform diagnostics	In Menus D1 to D5 you can operate and test the heat pump in diagnostic mode. The diagnostic menus cannot be exited with any setting apart from "Test = no" (Menu D1). An auto reset occurs 15 minutes after the last button is actuated. **In the diagnostic mode, the pre-, minimum and run-on times of the compressor, pumps and other components are not heeded!** Malfunctions can occur if the diagnostic mode is frequently turned on and off.	
diagnosis D1 refrigerant circuit Test >no Comp High Pressure 11.9 bar T outlet compresor 66 °C Comp. low pressure 2.3 bar T inlet compressor 0 °C	**Test**: no/off/heating/hot water/cooling[1)] *. Set the operating mode for the heat pump in order to test its behaviour. **Comp. high pressure**: Display of coolant pressure Compressor output. **T outlet compressor** (compressor output, high pressure): Display of temperature sensor T1.* **Comp. low pressure**:Display of coolant pressure Compressor input. **T inlet compressor** (compressor input, intake side): Display of temperature sensor T2.*	–
diagnosis D2 refrigerant circuit overheat 4 K Subcooling 10 K Temp TEV inlet 10 °C	**Superheating** of the coolant calculated from T2* and low pressure sensor. Only displayed when the compressor is operating. **Subcooling** of the coolant calculated from T4* and high pressure sensor. Only displayed when the compressor is operating. **Temp TEV inlet:** Temperature at the inlet of the thermal expansion valve*	–
diagnosis D3 Central Heating Current flow temp. 27 °C Current return temp 24 °C CH pump Off CH pressure 1.2 bar Auxiliary heater Off	Current **flow temperature** T6.* Current **return temperature** T5.* Status of **CH pump**: ON/OFF **CH pressure** (heating circuit pressure sensor). Status of **auxiliary heating**: ON/OFF	–
diagnosis D4 Heat Source Brine pump On T Return Source 10 °C T outlet Evaporator 9 °C Brine pressure 1.5 bar	Status of **brine pump**: ON/OFF **T return source**: Temperature of the heat source, T3.* **T outlet evaporator:** Heat source temperature at the outlet of the heat pump, T8.* VWS only: **Brine pressure** (Pressure sensor for heat source circuit; brine pressure)	–

Table 8.4 Parameters that can be set in the Code level (cont.)

1) Cooling mode is only possible when using the VWZ NC 14/17 accessory, and only for VWS 14 and VWS 17 heat pumps.

* see Figs. 1 and 2 in the appendix

Display shown	Description	Factory setting
diagnosis D5 CH circuit Buffer VF1 45 °C Buffer RF1 36 °C Sensor VF2 38 °C Current DHW temp. 52 °C <UV1> HK	**Buffer VF1:** Buffer cylinder top temperature sensor **Buffer RF1:** Buffer cylinder base temperature sensor **Sensor VF2:** Current CH flow temperature **Hot water SP:** Temperature in the domestic hot water cylinder. **UV1:** = Status of 3-way valve (HK = heating circuit, WW = hot water)	
Menu I: Display general information	In Menus I1 to I4 you can obtain information regarding the settings for the heat pump.	
Error History I1 Fault number >1 Fault code 96 16.02.08 07:18 Error Error - sensor fault	Display of the error memory, showing the last 10 errors in the order they appeared. The error number with error code, the date/time of the occurrence and a short description of the error can all be read. The error number shows the order in which the errors occurred. The error code identifies the error. You will find a listing in Chap. 10. Turning the ⊟ dial shows the next error.	–
Statistics I2 Compressor hours 7 hours Compressor starts 33 Aux. heating hours 2 hours Aux. heating starts 21	**Compressor hours**: Compressor operating hours to date. **Compressor starts**: Number of compressor starts. **Aux. heating hours**: Auxiliary heating operating hours to date. **Aux. heating starts**: Number of auxiliary heating starts.	–
Software releases I3 I/O card 1 3.34 User Interface 1 2.22 VR 80 VR 90	Software release **I/O card** (PCB in the heat pump). Software release of the **User Interface** (display in the operating console). VR 80: displays the software release when a VR 80 is connected. VR 90: displays the software release when a VR 90 is connected.	–
I4 Reset? No Code 1: 0000 Code 2: FFFF Codes accepted ? No	**Reset**: Reset of fault-induced shutdowns; all running processes are immediately interrupted; the heat pump starts up again. Code 1/Code 2: No function! Values must not be changed!	0000; FFFF No

Table 8.4 Parameters that can be set in the Code level (cont.)

* see Figs. 1 and 2 in the appendix

Display shown	Description	Factory setting
Menu A: Installation Assistant	You will be guided through the Installation Assistant, Menus A1 and A2, during the initial commissioning of the heat pump. The Installation Assistant appears automatically during initial commissioning.	
Installation A1 Language selection Language >GB english >Select	**Language**: Set the local language During the initial installation the controller always starts with this menu (Installation Assistant).	
Installation assistant A2 Hydraulic scheme 3 Heat pump type 5 Electroplan 1 Accept change Yes >Select	The hydraulic and electro plans must be set by the installer during initial commissioning. The heat pump type has already been set at the factory and may not be changed! **Hydraulic plan:** 1 = no buffer cylinder, no DHW cylinder 2 = with buffer cylinder, no DHW cylinder 3 = no buffer cylinder, with DHW cylinder 4 = with buffer cylinder, with DHW cylinder See Figs. 6.8 to 6.11. **Note**: Other hydraulic plans may only be set if the VWZ NC 14/17 accessory is used. More detailed information regarding this can be found in the installation manual for the VWZ NC 14/17 accessory. **Heat pump type:** Type Description 4 VWS 61/2 6 VWS 81/2 8 VWS 101/2 9 VWS 141/2 10 VWS 171/2 16 VWW 61/2 18 VWW 81/2 20 VWW 101/2 21 VWW 141/2 22 VWW 171/2 **Electroplan:** 1 = all on the high tariff (see Fig. 6.2). 2 = low tariff for the compressor (see Fig. 6.3). 3 = low tariff for the compressor and electric auxiliary heating (see Fig. 6.4). **Accept change:**Yes/No; "Yes" means that all the set values will be saved.	

Table 8.4 Parameters that can be set in the Code level (cont.)

Display shown	Description	Factory setting
Installation assistant A3 Auxiliary heater integration of the Auxiliary heater WW+HK Out T. aux htr on - 5 °C >Values can be set	**Auxiliary heating**: Determines whether, and where, the auxiliary heating is hydraulically connected: - internal (electric auxiliary heating in the heat pump) - WW + HK: external auxiliary heating available for hot water and the heating circuit - no auxiliary heating (no frost protection during emergency operation) - DHW: external auxiliary heating available only for hot water The controller will only activate the auxiliary heating if it is enabled in Menu C7 "Auxiliary heating" and the following condition is satisfied: **Out T. aux htr on**: The auxiliary heating is only enabled for post-heating in the heating mode if the outside temperature is below this value.	intern - 5 °C
Installation assistant A4 Geothermal settings Freeze protect temp. - 10 °C >Values can be set	VWS only: **Freeze protect temp.**: Minimum permissible heat source outlet temperature. If the temperature falls below this value, error message 21/22 or 61/62 appears and the compressor switches off. VWW: Freeze protect temp. = 4 °C.	- 10 °C
Tool A5 Component Test 1 <HK2-P> On <ZP> Off <ZH> Off <SK2-P> Off	You can check the heat pump actuators with the component test. This intervention lasts for a maximum of 20 minutes and ignores current controller inputs during this time. Afterwards, the heat pump reverts to its previous operating condition. **Note:** If the compressor is activated, the CH pump and the brine pump or well pump will also be turned on automatically. UV1 = DHW: Changeover valve in "DHW loading" position. UV1 = HK: Changeover valve in "CH mode" position.	Off

Table 8.4 Parameters that can be set in the Code level (cont.)

Display shown	Description	Factory setting
Tool A6 Component Test 2 Component VR 60 Addr. 4 Actuators Off Sensors VF a 29 °C Select	The display only appears is several heating circuits and at least one VR 60 are installed. You can check the actuators for the connected accessories with the component test 2. This intervention lasts for a maximum of 20 minutes and ignores current controller inputs during this time. Afterwards, the heat pump reverts to its previous operating condition.	
Tool A7 Ventilation Venting prog Off	Venting prog.: The brine pump alternates between 50 minutes operating and 10 minutes off. 24 hours of intermittent operation of the brine pump and the circulation pump, and also UV1 and the cooling UV/mixer if necessary.	–
Tool A8 Outside temperature 0.0 K DHW sensor SP 0.0 K T Flow Mix.OffsetVF2 0.0 K Buffer sensor RF1 0.0 K	Manual adjustment of the displayed temperatures. Offset adjustment range **Outside temperature**: +/- 5 K, step size 1.0 K. all others: +/- 3 K, step size 0.5 K. **Flow sensor VF2 temp.** is always displayed. Internal sensors can only be changed via vrDIALOG; buffer sensors and cylinder sensors only if the corresponding hydraulics are installed. Turn the right hand dial to display more sensors. Setting the **display contrast** (0 – 25).	0 K 0 K 0 K 0 K 16 (Display)
Installation completed A9 Exit mode? >yes >Values can be set	**Note regarding initial commissioning:** Do not set "Exit mode" to "YES" unless you are sure that everything has been set correctly. Once you have confirmed with "YES", the controller switches to the graphics display. The heat pump starts under its autonomous control system. This menu will not appear again once **YES** has been selected.	

Table 8.4 Parameters that can be set in the Code level (cont.)

8.9 Installer Menu

Special functions can be selected only from the basic display. To do so, press the left hand dial ⊟.
To change the parameter, you must turn the ⊡ dial. The following special functions can be selected:

- Energy saving function: Press ⊟ dial once.
- Party function: Press ⊟ dial twice.
- One-time charging: Press ⊟ dial 3 x.
- Cooling: Press ⊟ dial 4 x

To activate one of the functions, you merely have to select it. In the energy saving function it is additionally necessary to enter the time until which the energy saving function (regulation to set-back temperature) is to apply.

The top-level display appears either after the function has completed (time expires) or if the ⊟ dial is pressed.

Display shown	Description
We 16.02.08 9:35 Energy saving enabled >Select stop time	**Energy-saving function**: You can reduce the heating times for a presettable period using the energy-saving function. Enter the time for the end of the energy-saving function in the format hh:mm (hours:minutes).
We 16.02.08 9:35 Party function enabled	**Party function**: With the party function you can set the heating and hot water times beyond the next switch off time on to the next start of heating. You can only use the party function with those heating circuits or hot water circuits for which the "Auto" or "Eco" mode is set.
We 16.02.08 9:35 one-time DHW tank loading enabled	**One-time DHW tank loading**: This function allows you to charge the hot water cylinder once, regardless of the current time program.

Table 8.5 Special functions

Display shown	Description
We 16.02.08 9:35 Cooling function active for > 3 days	This menu is only displayed when the heating system is fitted with an external cooling plant (accessory VWZ NC 14/17) and an appropriate hydraulic plan has been set. Cooling duration: OFF/1 to 99 days. If the cooling mode is active, a snowflake symbol appears in the graphics display.

Table 8.5 Special functions (cont.)

- Resetting to default settings: Keep the ⊟ dial and the ⊡ dial pressed down simultaneously for longer than 5 seconds. After that you can select whether to reset only the timer programs, or all values, to the default settings.

Display shown	Description
We 21.04.08 9:35 Factory setting cancel NO/YES Time programme NO/YES Everything NO/YES >Values can be set	The default settings will be reinstated. **Caution!** Leave the resetting of the default settings to the specialist. The system-specific settings will be reset. The system can stop operating. The system cannot be damaged. Press the two dials for at least 5 seconds to call up the default settings menu.

Table 8.6 Reinstating default settings

8.10 Parameters that can be set with vrDIALOG 810/2

Using its computer-supported graphics visualisation and configuration, vrDIALOG 810/2 (eBUS) enables you to optimise heating appliances and control systems and thus make use of their energy saving potential. Both of them enable you to create a visual impression of the processes in your control system and influence them at any time. The programmes enable you to record and graphically prepare system data, to load device configurations and change and save them online and to save information in the form of reports.
Using vrDIALOG 810/2, you can make all the settings for the heat pump as well as other settings for optimisation. Settings via vrDIALOG may only be performed by an experienced specialist.

Parameters	Description	Factory setting
Calibration of temperature sensors	Internal sensors can only be calibrated via vrDIALOG 810/2.	
Change name: CH circuit	A maximum of ten letters are available per heating circuit for this purpose. A maximum of ten letters are available per heating circuit for this purpose. The selected names are saved automatically and displayed on the corresponding displays. Depending on the system configuration, the names of additional heating circuits appear in the display.	HK2: <HK2>
Software version	The status provides information about the operating state of the heat pump software.	–
Elec Tariff switch	Status of power interruption due to activation of the EVU contact (blocking initiated by the power company): "no" = no blocking, "yes" = blocking active, activation by means of e.g. ripple control signal/receiver.	–
Phase Status	Phase status: displays whether all 3 phases are present (OK/Error).	–
Phase Sequence	Phase sequence: displays whether the phase sequence is correct (OK/Error).	–
Starting current limiter	Soft start status: ON/OFF	–
Fixed value day Fixed value night	This display only appears if the setting **Type** "Fixed value" has been selected via vrDIALOG. Here the flow temperature is controlled around a fixed setpoint, independently of the outside temperature. **Fixed value day:** Flow setpoint temperature (e.g. for manually set screed floor drying). **Fixed value night:** Flow setpoint temperature at night.	 35 °C 30 °C
Type HK2	Setting the heating circuit type: – **Direct circuit:** (Hydraulic plan 3) Heating mode runs with the setpoint flow temperature determined by the weather-controlled energy balance controller. – **Mixer circuit:** (Hydraulic plan 4) Heating mode runs with the setpoint flow temperature determined by the weather-controlled controller. – **Fixed value:** Fixed settings for the setpoint flow temperatures for day and night; see Menu C5.	direct circuit

Table 8.7 Parameters that can be set with vrDIALOG 810/2

Parameters	Description	Factory setting
Minimum flow temp. Maximum flow temp.	**Minimum/Maximum temperature:** Setting the limiting temperatures (min. and max.) that the heating circuit can request. Together with the maximum temperature, the value for the floor protection switching is also calculated (max. HK temp. + Compr. hysteresis + 2K).	15 °C 43 °C
Pre-loading time	**Pre-loading time:** To take account of the inertia of the underfloor heating, you can manually set a pre-heat before the start of the programmed heating time.	0 hrs.
CH run in HW mode20r.p.m. Max DHW load time40r.p.m.	**Max. heating time** = Maximum time after which the cylinder heating operation switches back on when there is still a parallel demand present for the cylinder. **Max. DHW load time:** = Time after which the operation switches from cylinder loading to heating mode, when there is a parallel demand for heating present.	20 min 40 mins
Compressor hyster.	Compressor hysteresis (only for hydraulic plans 1 and 3): Forced switch-on of the compressor when: Current flow temperature < Setpoint flow temperature - Hysteresis Forced switch-off of the compressor when: Current flow temperature > Setpoint flow temperature + Hysteresis	7 K
Compressor starts	Comp. starts/h: max. allowable no. of compressor starts per hour. (3-5).	3
Max. CH return temp. HK46°C	Max. CH return temp. HK: Sets the return temperature limits for compressor operation. This function should prevent unnecessary short-term operation of the compressor.	46 °C
Delta T. T3-T7	**Delta T. T3-T7**: Max. permissible difference between the heat source inlet and outlet temperatures. An error message appears and the compressor switches off if it is exceeded. The function is deactivated if 20 K is set.	20 K
Brine pump pre-run	**Brine pump pre-run:** Interval by which the brine pump switches on ahead of the compressor.	1 min
Temperature fault detection after	Temp. fault detection: If the setpoint for the flow temperature of a heating circuit is not reached after the preset time, a corresponding error message appears in the display and the error is stored in the error list (display of the last ten errors). This function can be switched on or off.	Off
Next service due	Quick test. With "Next service due" ON, the time intervals for the energy balance integral are changed from 1 minute to 1 second and the energy balancing is thus acclerated by a factor of 60. The minimum run time of 4 minutes and the minimum off time of 5 minutes for the compressor are unchanged.	–

Table 8.7 Parameters that can be set with vrDIALOG 810/2 (cont.)

9 Inspection and maintenance

9.1 General notes

In contrast to heaters based on fossil fuels, no expensive maintenance work is necessary for the Vaillant geoTHERM heat pump. However an annual inspection of the system by a specialist is a prerequisite for continuing operational safety, reliability and a long working life.

Danger!
Inspection and repairs may be carried out only by an approved heating installation company.
Inspections / Maintenance work not carried out can result in damage to property and personal injury.

Danger!
Risk of fatal electric shock from touching live connections! Before commencing work on the heat pump, disconnect the power supply (circuit breaker) and secure it against being switched on again inadvertently.

Only genuine Vaillant replacement parts may be used for maintenance work, to ensure the long-term working order of all functions of your Vaillant appliance and to prevent changes to the approved production standard. Any spare parts which might be required are listed in the relevant current spare parts catalogues.
Information can be obtained from Vaillant Customer Service Centres.

9.2 Inspection work to be performed

The heat pump is engineered in such a way that only a few inspection tasks need to be carried out:

VWS:
- Manually actuate the safety assemblies in the brine and heating circuits at regular intervals.
- Check the dirt filter in the brine circuit regularly.
- Check the pressures in the brine and heating circuits regularly.

VWW:
- Manually actuate the safety assemblies in the heating circuit at regular intervals.
- Check the dirt filter in the water circuit regularly.
- Check the pressure in the heating circuit regularly.

9.3 Servicing and repairs

The Vaillant geoTHERM heat pump requires no servicing work.
To carry out repairs to defective parts on the inside of the heat pump:

- Remove the heat pump cladding sections in the reverse order to that described in Chap. 6.4.

9.4 Test operation and restarting

Danger!
Risk of injury!
The heat pump may only be put into operation again after all the cladding sections have been fitted.

- Fit all the heat pump cladding sections as described in Chap. 6.4.
- Start up the heat pump.
- Check the heat pump for correct functioning.

10 Troubleshooting and diagnostics

Danger!
Troubleshooting and diagnostics measures may only be carried out by a recognised expert technician company.

Danger!
Risk of fatal electric shock from touching live connections! Before commencing work on the heat pump, disconnect the power supply (circuit breaker) and secure it against being switched on again inadvertently.

10.1 Error messages on the controller

Error messages appear on the display approximately 20 seconds after the error has occurred and are written to the controller's error memory if the error is present for approximately 3 minutes. You can call up the error memory in Menu I1. As long as the fault is present, you can call up the fault display by turning the left hand dial 1 x to the left, starting from the graphics display.

Error History	I1
Fault number	>1
Fault code	41
16.02.08 07:18	
Error CH circuit	
Heat source inlet sensor T3	

Fig. 10.1 Error message in error memory, Menu I1

The geoTHERM control system recognises three different types of malfunction:
- Malfunction of **components** that are connected via the **eBUS**.

- **Temporary shut-down**
  The heat pump remains in operation. The error is displayed and disappears independently when the cause of the fault is removed.
- **Fault-induced shutdown**
  The heat pump is shut down. It can only be restarted by resetting the error after removing the cause of the fault (see Menu I 1).
- In addition,**other errors/malfunctions** can occur on the unit or system.

10.2 Malfunctions of eBUS components

Fault code	Error text/description	Possible cause	Remedy
1	XXX address YY not accessible	A component XXX connected via the eBUS, e.g. VR 60 with the address YY is not recognised.	Check the eBUS cable and plug. Check that the address switch is correctly set.
4	XXX address YY sensor fault ZZZ	A sensor ZZZ on one of the components XXX connected via the eBUS, with the address YY, is defective.	Check the ProE plugs on the PCBs, check the sensor for correct functioning, replace sensor.
5	XXXX setpoint not achieved	XXXX setpoint not achieved.	Check temperature setpoint. Check position of temperature sensor. Deactivate temperature error detection (C13).

Table 10.1 Malfunctions of eBUS components

10.3 Displays in the error memory and under "Warning message"

The heat pump, including the compressor, remains in operation. The following errors are displayed in the error memory and in Menu 1 as warning messages.

Fault code	Error text/description	Possible cause	Remedy
26	Overheating on pressure side of compressor	Excessively high output with a high flow temperature.	Reduce the heating curve. Check the required heating output (floor drying, building shells) and reduce if necessary.
36	Brine pressure low	Pressure drop in the heat source system as a result of leakage or air lock. Pressure < 0.6 bar	Check heat source system for leaks, top up brine, bleed.

Table 10.2 Display in error memory and under "Warning message" in Menu 1, no shut-down

10.4 Temporary shut-down

The compressor shuts down, the heat pump remains in operation. The compressor can start again after 5 minutes at the soonest. (see below for exceptions).

Fault code	Error text/description	Possible cause	Remedy
20	Heat source outlet frost protection monitoring Temperature difference at the heat source (T3 - T8) > preset value "Delta T. T3-T7" This error message is deactivated as standard and can only be activated via vrDIALOG parameter "Delta T. T3-T7" (20 K difference means deactivated).	Heat source pump defective, temperature sensor T8 or T3 defective. Too low a volume flow in the heat source circuit. No/full dirt filter in source return line. Air in brine circuit.	Check heat source flow rate. Check the plug contact on the PCB and the cable harness, check the sensor for correct position and function (resistance measurement using VR 11 characteristics, see Appendix), replace sensor. Check the volume flow of the well pump/brine pump (optimum temp. difference approx. 3-5 K). Fit/clean dirt filter. Bleed the brine circuit.
21 (VWW only)	Heat source outlet frost protection monitoring Source outlet temperature T8 too low (<4 ºC)	Temperature sensor T8 defective. No/full dirt filter in source return line.	Check temperature level of the heat source. Check the plug contact on the PCB and the cable harness, check the sensor for correct position and function (resistance measurement using VR 11 characteristics, see Appendix), replace sensor. Check the volume flow of the well pump/brine pump (optimum temp. difference approx. 3-5 K). Fit/clean dirt filter.
22 (VWS only)	Heat source outlet frost protection monitoring Source outlet temperature T8 too low (< Freeze protect temp. parameter in Menu A4)	Heat source pump defective, temperature sensor T8 defective. Too low a volume flow in the heat source circuit. No/full dirt filter in source return line. Air in brine circuit.	Check heat source flow rate. Check the plug contact on the PCB and the cable harness, check the sensor for correct position and function (resistance measurement using VR 11 characteristics, see Appendix), replace sensor. Check the volume flow of the well pump/brine pump (optimum temp. difference approx. 3-5 K). Clean the filter Bleed the brine circuit.
23 (VWW only)	No ground water flow Integral flow switch not detecting any volume flow	Filter in heat source circuit blocked. Well pump defective. Motor protection switch on the well pump has tripped. Flow switch defective or not connected.	Clean the filter Check the functioning of the well pump, replace if necessary. Check for overloading, e.g. by blocking or a phase missing. Check the well pump, contactor and motor protection switch, replace if necessary. Check the functioning of the flow switch.

Table 10.3 Temporary malfunctions

Fault code	Error text/description	Possible cause	Remedy
27	Coolant pressure too high The integral high pressure switch has tripped at 30 bar (g). The heat pump can start again after a 60 minute wait at the earliest.	Heat consuming side using too little heat. Possible causes:	
		Air in the heating system.	Bleed the heating system.
		Defective heating pump or pump output has reduced.	Check pump, replace if necessary.
		Radiator heating without low loss header or buffer cylinder.	Check the system.
		Buffer cylinder, sensors VF1 and RF1 interchanged.	Check the sensor positions.
		Too low a volume flow as a result of closing individual room controllers in an underfloor heating system. Brief heating operation occurs after every DHW charge if the outside temperature falls below the outside temp. switch-off limit! The control system checks if heating operation is required.	Check the system.
		Domestic hot water cylinder with too low a power input installed.	Check power input.
		Existing dirt strainers clogged or incorrectly dimensioned.	Clean dirt strainers.
		Stop valves closed.	Open all stop valves.
		Coolant flow rate too low (e.g. thermal expansion valve TEV incorrectly adjusted or defective).	Check coolant circuit.
28	Coolant pressure too low The integral low pressure switch has tripped at 1,25 bar (g).	Heat source providing too little heat. Possible causes:	
		(VWS only) Air in heat source circuit.	Bleed the heat source circuit.
		(VWS only) Brine pump defective or pump output has reduced.	Check brine pump.
		(VWS only) Not all circuits are circulating equally. Recognisable by different degrees of icing on individual brine circuits.	Adjust the brine circuits.
		Existing dirt strainers clogged or incorrectly dimensioned.	Clean dirt strainers.
		Not all the required stop valves are open.	Open all stop valves.
		Coolant flow rate too low (e.g. thermal expansion valve TEV incorrectly adjusted or defective).	Check coolant circuit.
29	Coolant pressure outside specified range If the error occurs twice in succession, the heat pump can start again after a 60 minute wait at the earliest.	Coolant pressure too high or too low, all above-mentioned causes possible Errors (27 and 28).	See Errors 27 and 28.

Table 10.3 Temporary malfunctions (cont.)

10.5 Blocking error

The heat pump is shut down. It can only be restarted by resetting the error after removing the cause of the fault (see Menu I 1).
With the exception of Errors 90 and 91, these do not need to be reset. The heat pump starts again when the cause of the error has been removed.

Emergency mode

Depending on the nature of the malfunction, there are settings that can be made to allow the heat pump to continue operating in an emergency mode (by means of the integrated electrical heating) until the fault is cleared, either in heating operation (display: "CH priority"), hot water operation (display: "DHW priority") or both (display: "CH priority/DHW priority"), see the following tables, "Emergency operation" column.

Fault code	Error text/description	Emergency mode	Possible cause	Remedy
32	Error, heat source sensor T8 Short circuit in sensor	possible	The internal sensor for the source outlet temperature is defective or not properly plugged into the PCB.	Check the plug contact on the PCB and the cable harness, check the sensor for correct position and function (resistance measurement using VR 11 characteristics, see Appendix), replace sensor.
33	Error, heating circuit pressure sensor Short circuit in pressure sensor		The pressure sensor in the heating circuit is defective or not properly plugged in.	Check the plug contact on the PCB and the cable harness, check pressure sensor for correct functioning, replace pressure sensor.
34	Fault with brine pressure sensor Short circuit in pressure sensor	possible	The pressure sensor in the heat source circuit is defective or not properly plugged in.	
40	Error comp outlet sensorT1 Short circuit in sensor	possible	The internal temperature sensor on the high pressure side of the compressor is defective or not properly plugged into the PCB.	Check the plug contact on the PCB and the cable harness, check the sensor for correct position and function (resistance measurement using VR 11 characteristics, see Appendix), replace sensor.
41	Error, heat source sensor T3 Short circuit in sensor	possible	The internal sensor for the source inlet temperature is defective or not properly plugged into the PCB.	
42	Error HP return sensor T5 Short circuit in sensor	possible	The internal temperature sensor on the heating return line is defective or not properly plugged into the PCB.	
43	Error HP flow sensor T6 Short circuit in sensor	possible	The internal temperature sensor on the heating flow line is defective or not properly plugged into the PCB.	
44	Error, external sensor AF Short circuit in sensor	possible	The outside temperature sensor or its connecting cable is defective or it is not connected correctly.	Check the ProE plug on the PCB, check the connecting cable, replace the sensor.
45	Error DHW tank sensor SP Short circuit in sensor	possible	The cylinder temperature sensor is defective or it is not connected correctly.	Check the ProE plug on the PCB, check the sensor for correct function (resistance measurement using VR 10 characteristics, see Appendix), replace sensor.
46	Error HB flow sensor VF1 Short circuit in sensor	possible	The upper sensor in the buffer cylinder is defective or it is not connected correctly.	
47	Error HB return sensor RF1 Short circuit in sensor	possible	The lower sensor in the buffer cylinder is defective or it is not connected correctly.	
48	Error flow sensor VF2 Short circuit in sensor	DHW operation possible	The contact temperature sensor VF2 in the heating circuit is defective or it is not connected correctly.	
52	Sensors do not match the hydraulic plan	–	Hydraulic plan not entered correctly, sensors not connected correctly.	Check the hydraulic plan and sensor positions using the existing system.

Table 10.4 Fault-induced shutdown

Fault code	Error text/description	Emergency mode	Possible cause	Remedy
60	Heat source outlet frost protection monitoring Error 20 occurred three times in succession	possible	See Error 20.	See Error 20.
61 VWW only	Heat source outlet frost protection monitoring Error 21 occurred three times in succession	possible	See Error 21.	See Error 21.
62 VWS only	Heat source outlet frost protection monitoring Error 22 occurred three times in succession	possible	See Error 22.	See Error 22.
63 VWW only	No ground water flow Error 23 occurred three times in succession	possible	See Error 23.	See Error 23.
72	Flow temperature too high for underfloor heating Flow temperature is higher than a preset value for 15 min (max. HK temp. + compr.hysteresis + 2 K) (see Chap. 8.10, default setting: 52 °C)	_	Flow sensor VF2 fitted too close to the heat pump.	Relocate flow sensor in accordance with hydraulic plan.
			Flow sensor VF2 is defective	Check flow sensor VF2, replace if necessary.
			Defective heating circulation pump or pump output has reduced.	Test heating circulation pump, replace if necessary.
			Existing dirt strainers clogged or incorrectly dimensioned.	Clean dirt strainers.
			Mixer behind buffer cylinder is defective.	Test mixer, replace if necessary.
			Max. HK temp. set too low.	Check "Max. HK temp." setting.
81	Coolant pressure too high Error 27 occurred three times in succession	possible	See Error 27.	See Error 27.
83	Coolant pressure too low. Check heat source Error 28 occurred three times in succession	possible	See Error 28.	See Error 28.
84	Coolant pressure outside specified range Error 29 occurred three times in succession	possible	See Error 29.	See Error 29.
90	Heating system pressure too low Pressure < 0.5 bar Heat pump shuts down and goes into operation automatically when the pressure rises above 0.7 bar	_	Pressure drop in the heating system as a result of leakage, air lock or defective expansion vessel.	Check heating system for leaks, top up water, bleed, check the expansion vessel.
			Screw couplings at the rear of the heat pump are not sealing correctly .	Retighten screw couplings.
			Compression fittings on 3-way valve are leaking.	Retighten compression fittings on 3-way valve.

Table 10.4 Fault-induced shutdown (cont.)

Fault code	Error text/description	Emergency mode	Possible cause	Remedy
91	Brine pressure too low Pressure < 0.2 bar Heat pump shuts down and goes into operation automatically when the pressure rises above 0.4 bar	possible	Pressure drop in the heat source system as a result of leakage or air lock.	Check heat source system for leaks, top up brine, bleed.
			Brine pressure sensor defective.	Check the plug contact on the PCB and the cable harness, check pressure sensor for correct functioning, replace pressure sensor.
			L1 and N connections on the PCB interchanged.	Check L1 and N connections on the PCB and connect correctly if necessary.
94	Phase loss Check circuit breaker One or more phases dropped out.	possible	Loss of a phase or a circuit breaker has tripped.	Check circuit breakers and cable connections (power supply to the compressor).
			Badly tightened electrical connections.	Check electrical connections.
			Mains voltage too low.	Measure voltage at heat pump terminal box.
			Power company block on incorrectly set E-plan (e.g. E-plan 1).	Check E-plan setting.
			Start-up current limiter defective or incorrectly connected.	Check start-up current limiter.
95	Wrong direction of rotation. Change comp. phases Phase sequence not correct	possible	Phases switched over.	Change the phase sequence by switching over 2 phases at a time on the mains feed.
			Start-up current limiter defective or incorrectly connected.	Check start-up current limiter.
96	Error - sensor fault Short circuit in pressure sensor	possible	A pressure sensor in the cooling circuit is defective or not properly plugged in.	Check the plug contact on the PCB and the cable harness, check pressure sensor for correct functioning, replace pressure sensor.

Table 10.4 Fault-induced shutdown (cont.)

10.6 Other errors/malfunctions

Fault indication	Possible cause	Remedy
The auxiliary heating does not function, even though it has been enabled by the controller (e.g. when the supply has been blocked by the power supply company (Power company blockage)); the heating or the domestic hot water cylinder do not reach the desired temperature.	The auxiliary heating is tied to a low-rate tariff which has been blocked by the power company.	Check whether the auxiliary heating is on a low-rate tariff and a power company blockage is in effect.
	The safety thermostat (STB) on the auxiliary heating has tripped.	Release the STB by pushing the button.
	Possible causes if the thermostat trips again:	
	Air in the heating system. Blocked dirt filters in the heating system return line.	Bleed the heating circuit. Clean the blocked dirt filters.
	The heating circulation pump has stopped or is running too slowly.	check the heating circulation pump and replace if necessary.
Noises in the heating circuit.	Air in the heating circuit.	Bleed the heating circuit.
	Dirt in the heating circuit.	Flush the heating circuit.
	"Out T. aux htr on" incorrectly set.	Change "Out T. aux htr on" (Menu A3).
	Pump defective.	Check functioning of the pump; replace if necessary.
Traces of water beneath or next to the appliance.	The condensate drain is blocked.	Condensate in the interior of the unit is collected in the condensate pan and, if necessary, fed away under the unit (not a fault). Check the insulation on the pipes in the interior of the unit and re-insulate, if necessary, to reduce the accumulation of condensate.
	Leaks from the heating circuit.	Check the heating circuit components (pump, auxiliary heating, pipes) for leaks. If necessary, retighten the screw couplings and replace the seals.
Outside temperature indicates - 60 ºC.	Outside temperature sensor defective.	Check outside temperature sensor.
Temperatures in the heating circuit too cold or too warm.	Room target temp. not optimally set	Change room target temp. (Menu ⊟ 1).
	Set-back temp. not optimally set	Change set-back temp. (Menu ⊟ 1).
	Heating curve not optimally set.	Change heating curve (Menu C2).

Table 10.5 Other errors/malfunctions

11 Recycling and disposal

Both your Valliant geoTHERM heat pump and its associated packaging consist mainly of raw materials that can be recycled.

11.1 Appliance

If your heat pump is identified with this symbol, it does not belong with your household waste at the end of its useful life. In this case, make sure that the Vaillant appliance and any accessories present are properly disposed of at the end of their useful life.
As this Vaillant appliance is not covered by the law regarding the marketing, return and environmentally friendly disposal of electrical and electronic equipment (ElektroG in Germany), free disposal at a municipal collection point is not provided.

11.2 Packaging

Make sure that the transport packaging is handed over to a proper disposal organisation.

11.3 Coolant

The Vaillant heat pump is filled with R 407 C coolant.

Danger!
R 407 C coolant!
Disposal of the coolant must only be by qualified specialists.
Do not inhale gases or vapours when disposing of the coolant.
Risk to health! Avoid contact with the skin and eyes. Escaping coolant can cause freezing if the exit point is touched! R 407 C coolant presents no danger in normal use and under normal conditions. With improper use, however, it can cause injury and damage.

Caution!
Environmental hazard!
Before disposal of the heat pump, the coolant must be disposed of at special facilities.

12 Customer service and guarantee

12.1 Vaillant warranty

Vaillant provide a full parts and labour warranty for this appliance. The appliance must be installed by a suitably competent person in accordance with the Gas Safety (Installation and Use) Regulations 1998, and the manufacturer's instructions. In the UK 'CORGI' registered installers undertake the work in compliance with safe and satisfactory standards.
All unvented domestic hot water cylinders must be installed by a competent person to the prevailing building regulations at the time of installation (G3).

Terms and conditions apply to the warranty, details of which can be found on the warranty registration card included with this appliance.

Failure to install and commission this appliance in compliance with the manufacturer's instructions may invalidate the warranty (this does not affect the customer's statutory rights).

12.2 Vaillant Service

To ensure regular servicing, it is strongly recommended that arrangements are made for a Maintenance Agreement. Please contact Vaillant Service Solutions (0870 6060 777) for further details.

13 Technical data

13.1 Technical data - VWS

Description	Unit	VWS 61/2	VWS 81/2	VWS 101/2	VWS 141/2	VWS 171/2
Article number	-	0010002778	0010002779	0010002780	0010002781	0010002782
Height without connections	mm	1200				
Width	mm	600				
Depth without pillars	mm	650				
Depth with pillars	mm	840				
Weight						
- with packaging	kg	156	163	167	187	194
- without packaging	kg	141	148	152	172	179
- ready for operation	kg	147	155	160	182	191
Rated voltage	-					
- Heating circuit/Compressor		3/N/PE 400 V 50 Hz				
- Control circuit		1/N/PE 230 V 50 Hz				
- Auxiliary heating		3/N/PE 400 V 50 Hz				
Fuse, slow-blow	A	3 x 16	3 x 16	3 x 16	3 x 25	3 x 25
Start-up current						
- without start-up current limiter	A	26	40	46	64	74
- with start-up current limiter	A	< 16	< 16	< 16	< 25	< 25
Electrical power consumption:						
- min. for B-5W35	kW	1.3	1.8	2.3	3.1	3.9
- max. for B20W60	kW	3.1	3.8	4.9	6.8	7.7
- Auxiliary heating	kW	6	6	6	6	6
EN 60529 level of protection	-	IP 20				
Hydraulic connections						
- Heating circuit flow and return	mm	G 1 1/4", diameter 28				
- Heat source flow and return	mm	G 1 1/4", diameter 28				
Heat source circuit (brine circuit)						
- Brine type	-	Ethylene glycol 30 %				
- max. operating pressure	MPa (bar)	0.3 (3)				
- min. inlet temperature	°C	-10				
- max. inlet temperature	°C	20				
- Nominal flow rate dT 3K	l/h	1431	1959	2484	3334	3939
- Residual head dT 3K	mbar	386	327	272	252	277
- Nominal flow rate dT 4K	l/h	1073	1469	1863	2501	2954
- Residual head dT 4K	mbar	464	426	386	428	487
- Electrical power consumption - pump	W	132	132	132	205	210
CH circuit						
- max. operating pressure	MPa (bar)	0.3 (3)				
- min. flow temperature	°C	25				
- max. flow temperature	°C	62				
- Nominal flow rate dT 5K	l/h	1019	1373	1787	2371	2973
- Residual head dT 5K	mbar	391	340	258	345	313
- Nominal flow rate dT 10K	l/h	504	698	902	1187	1538
- Residual head dT 10K	mbar	488	468	442	551	603
- Electrical power consumption - pump	W	93	93	93	132	205
refrigerant circuit						
- Coolant type	-	R 407 C				
- Quantity	kg	1.9	2.2	2.05	2.9	3.05
- Permissible operating overpressure	MPa (bar)	2.9 (29)				
- Compressor type	-	Scroll				
- Oil	-	Ester				
Heat pump performance data						
B0W35 dT5						
- Heating output	kW	5.9	8.0	10.4	13.8	17.3
- Power consumption	kW	1.4	1.9	2.4	3.2	4.1
- Performance figure/COP	-	4.3	4.3	4.4	4.3	4.3
B0W35 dT10						
- Heating output	kW	5.9	8,1	10.5	13.8	17.9
- Power consumption	kW	1.4	1.8	2.3	3.1	3.9
- Performance figure/COP	-	4.3	4,5	4.8	4,5	4.6
B5W55						
- Heating output	kW	6.4	8.5	11.0	15.2	18.6
- Power consumption	kW	2.2	2.7	3.4	4.7	5.8
- Performance figure/COP	-	2.9	3.1	3.2	3.2	3.2

Table 13.1 Technical data - VWS

Description	Unit	VWS 61/2	VWS 81/2	VWS 101/2	VWS 141/2	VWS 171/2
Internal sound level	dbA	46	48	50	52	53
Conforms to safety regulations	-	CE mark Low Voltage Directive 73/23/EWG EMC Directive 89/336/EWG EN 60335 ISO 5149				

Table 13.1 Technical data - VWS (cont)

Caution!
R 407 C is a chlorine-free coolant which does not affect the ozone layer. Nevertheless, any servicing work on the coolant circuit should only be carried out by authorised specialists.

13.2 Technical data - VWW

Description	Unit	VWW 61/2	VWW 81/2	VWW 101/2	VWW 141/2	VWW 171/2
Article number	-	0010002789	0010002790	0010002791	0010002792	0010002793
Height without connections Width Depth without pillars Depth with pillars	mm mm mm mm	1200 600 650 840				
Weight - with packaging - without packaging - ready for operation	 kg kg kg	 154 139 145	 161 146 153	 164 149 157	 182 174 186	 189 174 186
Rated voltage - Heating circuit/Compressor - Control circuit - Auxiliary heating	-	3/N/PE 400 V 50 Hz 1/N/PE 230 V 50 Hz 3/N/PE 400 V 50 Hz				
Fuse, slow-blow	A	3 x 16	3 x 16	3 x 16	3 x 25	3 x 25
Start-up current - without start-up current limiter - with start-up current limiter	 A A	 26 < 16	 40 < 16	 46 < 16	 64 < 25	 74 < 25
Electrical power consumption: - min. for W10W35 - max. for W20W60 - Auxiliary heating	 kW kW kW	 1,5 3.1 6	 2.1 3.8 6	 2.5 4.9 6	 3.5 6.8 6	 4.3 7.7 6
EN 60529 level of protection	-	IP 20				
Hydraulic connections - Heating circuit flow and return - Heat source flow and return	 mm mm	 G 1 1/4", diameter 28 G 1 1/4", diameter 28				
Heat source circuit - max. operating pressure - min. inlet temperature - max. inlet temperature	 MPa (bar) °C °C	 0.3 (3) 4 20				
- Nominal flow rate dT 3K - Residual head dT 3K - Nominal flow rate dT 4K - Residual head dT 4K - Electrical power consumption - pump	l/h mbar l/h mbar W	1816 - 1362 - -	2604 - 1953 - -	3045 - 2284 - -	4267 - 3200 - -	4983 - 3737 - -
CH circuit - max. operating pressure - min. flow temperature - max. flow temperature	 MPa (bar) °C °C	 0.3 (3) 25 62				
- Nominal flow rate dT 5K - Residual head dT 5K - Nominal flow rate dT 10K - Residual head dT 10K - Electrical power consumption - pump	l/h mbar l/h mbar W	1404 297 728 450 93	1998 180 993 418 93	2371 97 1229 382 93	3370 92 1724 469 132	4173 0 2050 516 205

Table 13.2 Technical data - VWW

Description	Unit	VWW 61/2	VWW 81/2	VWW 101/2	VWW 141/2	VWW 171/2
refrigerant circuit						
- Coolant type	-	R 407 C				
- Quantity	kg	1.9	2.2	2.05	2.9	3.05
- Permissible operating overpressure	MPa (bar)	2.9 (29)				
- Compressor type	-	Scroll				
- Oil	-	Ester				
Heat pump performance data						
W10W35 dT5						
- Heating output	kW	8.2	11.6	13.9	19.6	24.3
- Power consumption	kW	1.6	2.1	2.6	3.7	4.6
- Performance figure/COP	-	5.2	5.5	5.3	5.3	5.3
W10W35 dT10						
- Heating output	kW	8.5	11.6	14.0	20.1	23.9
- Power consumption	kW	1,5	2.1	2.5	3.5	4.3
- Performance figure/COP	-	5.6	5.7	5.5	5.7	5.6
W10W55						
- Heating output	kW	7.5	10,2	13.3	19.2	23.4
- Power consumption	kW	2.3	3.0	3.5	5.1	5.9
- Performance figure/COP	-	3.3	3.5	3.8	3.8	3.7
Internal sound level	dbA	46	48	50	52	53
Conforms to safety regulations	-	CE mark Low Voltage Directive 73/23/EWG EMC Directive 89/336/EWG EN 60335 ISO 5149				

Table 13.2 Technical data - VWW (cont)

14 Start-up checklist

Check the following checklist before putting the heat pump into service. Only operate the heat pump when all points have been satisfied in essence.

Heating circuit checklist	
During planning, was consideration given to parts of the building that are to be heated at a later time?	
Was the power for the hot water supply considered?	
Were the heating circuits in the system hydraulically balanced?	
Were leakage pressures determined by pipe network calculations?	
If planning calculations showed that pressure losses were to be expected: Was a second pump incorporated to overcome the pressure losses?	
Was the minimum mass flow of the heat pump considered?	
Was a dirt filter incorporated in the return line?	
Was the system provided with all the safety devices described in this manual?	
Were an overflow funnel and blow-out line incorporated?	
Were the pipes insulated with thermal insulation?	
Was the heating circuit flushed, filled and bled?	
Was the heating circuit checked for leaks?	
Were the pipes thermally insulated against vapour diffusion?	
Brine circuit checklist (VWS only)	
Was the brine circuit pressure tested with water and checked for leaks?	
Were the water/antifreeze mixing proportions (2:1) adhered to?	
Was the frost protection (- 15 °C) tested with a frost protection tester?	
Was a pressure switch incorporated in the brine circuit?	
Was the pressure switch connected to the heat pump?	
Was a dirt filter fitted at the brine side input to the heat pump?	
Were stop valves incorporated into the brine circuit?	
Were pressure regulating valves incorporated into the brine circuit?	
Were the brine circuits hydraulically balanced?	
Was the brine expansion tank fitted?	
Was the brine source circuit filled to a pressure of 1.5 bar?	
Was the brine expansion tank filled to 2/3 full?	
Were isolating devices fitted ahead of the heat pump?	
Were the pipes thermally insulated against vapour diffusion?	

Table 14.1 Start-up checklist

Water circuit checklist (VWW only)	
Was the water or its composition examined?	
Was a second heat exchanger used for decoupling?	
Was a dirt filter fitted at the water side input to the heat pump?	
Were isolating devices fitted ahead of the heat pump?	
Were the pipes thermally insulated against vapour diffusion?	
Electrical installation checklist	
Is there an isolation device with at least 3 mm contact opening fitted on the customer side and was it appropriately labelled?	
Were all electrical connections properly made and in accordance with the specified electrical circuit diagrams?	
Was the protective earth properly connected?	
Do all conductors have the required cross-sections?	
Were the required automatic safety devices used and labelled in accordance with the conductor cross-sections and installation methods used?	
Were all cables fastened using strain relief clamps?	
Was any available ripple control signal from the power company connected to the heat pump?	
Assembly checklist	
Were all the cladding panels fitted?	

Table 14.1 Start-up checklist (cont.)

15 Reference

To the technician: Please fill in the following tables to facilitate any servicing work that may arise.

Installation and commissioning were carried out by:

Heat source construction	
Date:	
Company:	
Name:	
Telephone:	

Electrical installation	
Date:	
Company:	
Name:	
Telephone:	

Start-up	
Date:	
Company:	
Name:	
Telephone:	

Planning the heat pump installation	Details
Details regarding heat demand	
Heating load of the property	
Hot water supply	
Was a central DHW supply used?	
Was the user's behaviour regarding hot water demand taken into account?	
During planning, was the increased hot water demand of Jacuzzis and showers taken into account?	
Equipment used in the heat pump system	**Details**
Unit designations of the installed heat pump	
Details regarding the domestic hot water cylinder	
Domestic hot water cylinder type	
Domestic hot water cylinder capacity	
Electric auxiliary heating? Yes/No	
Details regarding room thermostats	
VR 90/other/none	
Details regarding the heat source system	**Details**
Ground probe (number, drilling depth, spacing between probes)	
Number of probes	
Spacing between probes	
Drilling depth of the probes	
Details regarding the ground collector	**Details**
Number of brine circuits	
Distance of the installed pipes from one another	
Pipe diameter	
Installation depth of the collector in the ground	
Length of the longest brine circuit	

Table 15.1 Reference checklist

Details for VWW	Details
Magnitude of the mass flow that can be extracted from the ground water/well	
Ground water pump type	
Details regarding the heat consuming system	**Details**
If a second pump was incorporated to overcome the pressure losses: Manufacturer and type of the second pump	
Heating load of the underfloor heating	
Heating load of the wall heating	
Heating load of the combination underfloor heating/radiators	
Was a secondary return installed? (Yes/No)	
Starting up the hear pump system	**Details**
Checks before handing over to the user	
Pressure of the heating circuit in a cold state	
Does the heating system get warm?	
Does the water in the DHW cylinder get warm?	
Controller settings	
Were the basic settings made on the controller?	
Was the anti-Legionella function programmed? (Interval and temperature)	
Handover to the user	**Details**
Was the user instructed on the following points?	
Basic function and operation of the controlller	
Operation of the bleeding device	
Maintenance intervals	
Documentation handover	**Details**
Was the operating manual handed over to the user?	
Was the installation manual handed over to the user?	
Were the manuals for all the accessories handed over to the user?	

Table 15.1 Reference checklist (cont.)

Appendix

Sensor characteristics

VR 10 external temperature sensors

Temperature (°C)	Resistance (ohms)
-40	87879
-35	63774
-30	46747
-25	34599
-20	25848
-15	19484
-10	14814
-5	11358
0	8778
5	6836
10	5363
15	4238
20	3372
25	2700
30	2176
35	1764
40	1439
45	1180
50	973
55	807
60	672
65	562
70	473
75	400
80	339
85	289
90	247
95	212
100	183
105	158
110	137
115	120
120	104
125	92
130	81
135	71
140	63
145	56
150	50
155	44

Table 1, Appendix, VR 10 sensor characteristics

VR 11 internal temperature sensors

Temperature (°C)	Resistance (ohms)
-40	327344
-35	237193
-30	173657
-25	128410
-20	95862
-15	72222
-10	54892
-5	42073
0	32510
5	25316
10	19862
15	15694
20	12486
25	10000
30	8060
35	6535
40	5330
45	4372
50	3605
55	2989
60	2490
65	2084
70	1753
75	1481
80	1256
85	1070
90	916
95	786
100	678
105	586
110	509
115	443
120	387
125	339
130	298
135	263
140	232
145	206
150	183
155	163

Table 2, Appendix, VR 11 sensor characteristics

VRC-DCF outside temperature sensor

Temperature (°C)	Resistance (ohms)
-25	2167
-20	2067
-15	1976
-10	1862
-5	1745
0	1619
5	1494
10	1387
15	1246
20	1128
25	1020
30	920
35	831
40	740

Table 3, Appendix, VRC DCF sensor characteristics

Heat pump schematic - VWS

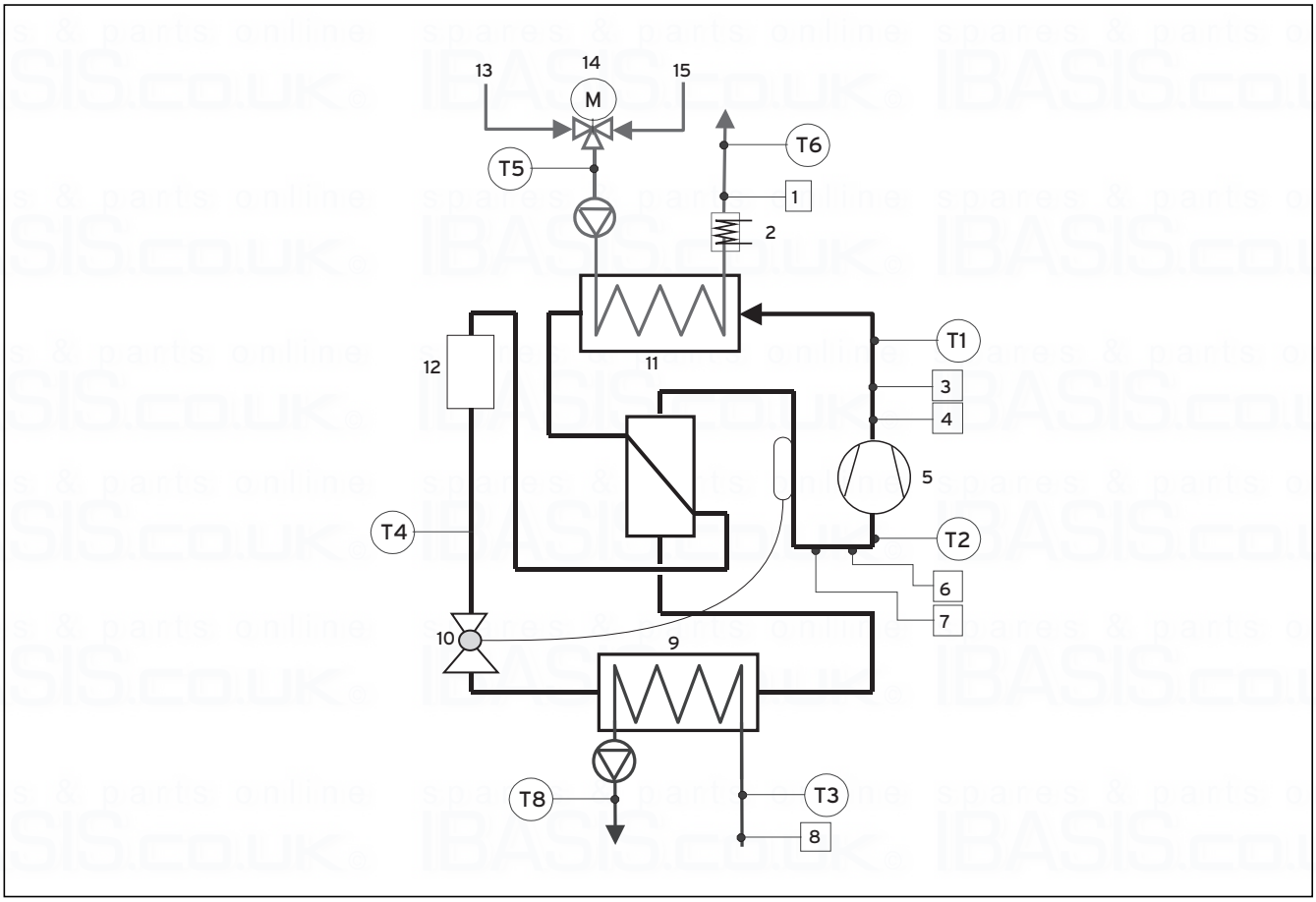

Fig. 1, Appendix, Heat pump schematic - VWS

Key to Fig. 1, Appendix

1 Heating circuit pressure sensor
2 Electric auxiliary heating
3 High pressure sensor
4 High pressure switch
5 Compressor
6 Low pressure sensor
7 Low pressure switch
8 Heat source circuit pressure sensor
9 Evaporator
10 Expansion Valve
11 Condenser
12 Filter drier
13 DHW return line
14 Heating return
15 Heating feed

Heat pump schematic - VWW

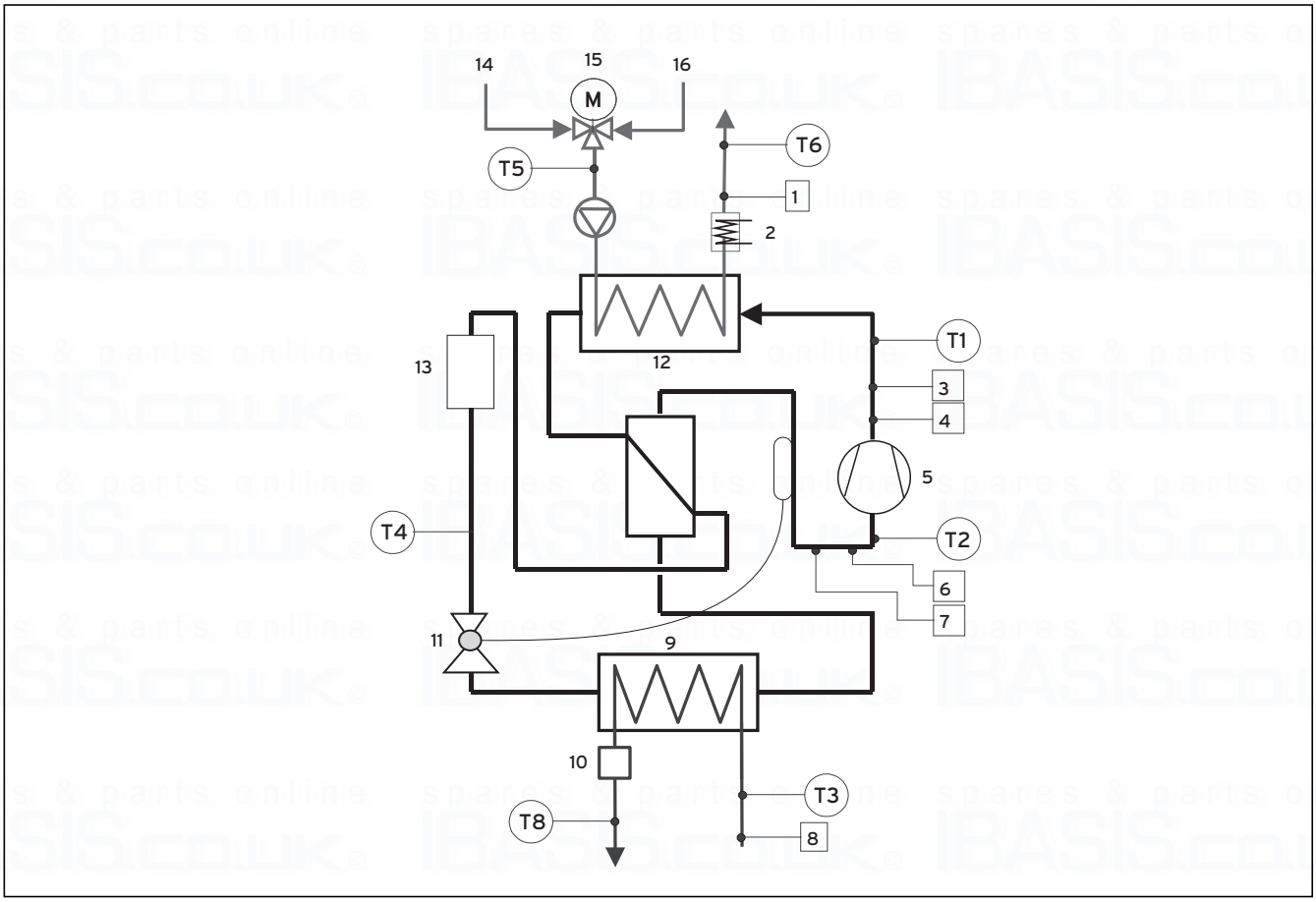

Fig. 2, Appendix, Heat pump schematic - VWW

Key to Fig. 2, Appendix

1 Heating circuit pressure sensor
2 Electric auxiliary heating
3 High pressure sensor
4 High pressure switch
5 Compressor
6 Low pressure sensor
7 Low pressure switch
8 Heat source circuit pressure sensor
9 Evaporator
10 Flow Switch
11 Expansion Valve
12 Condenser
13 Filter drier
14 DHW return line
15 Heating return
16 Heating feed

Electrical circuit diagram - VWS

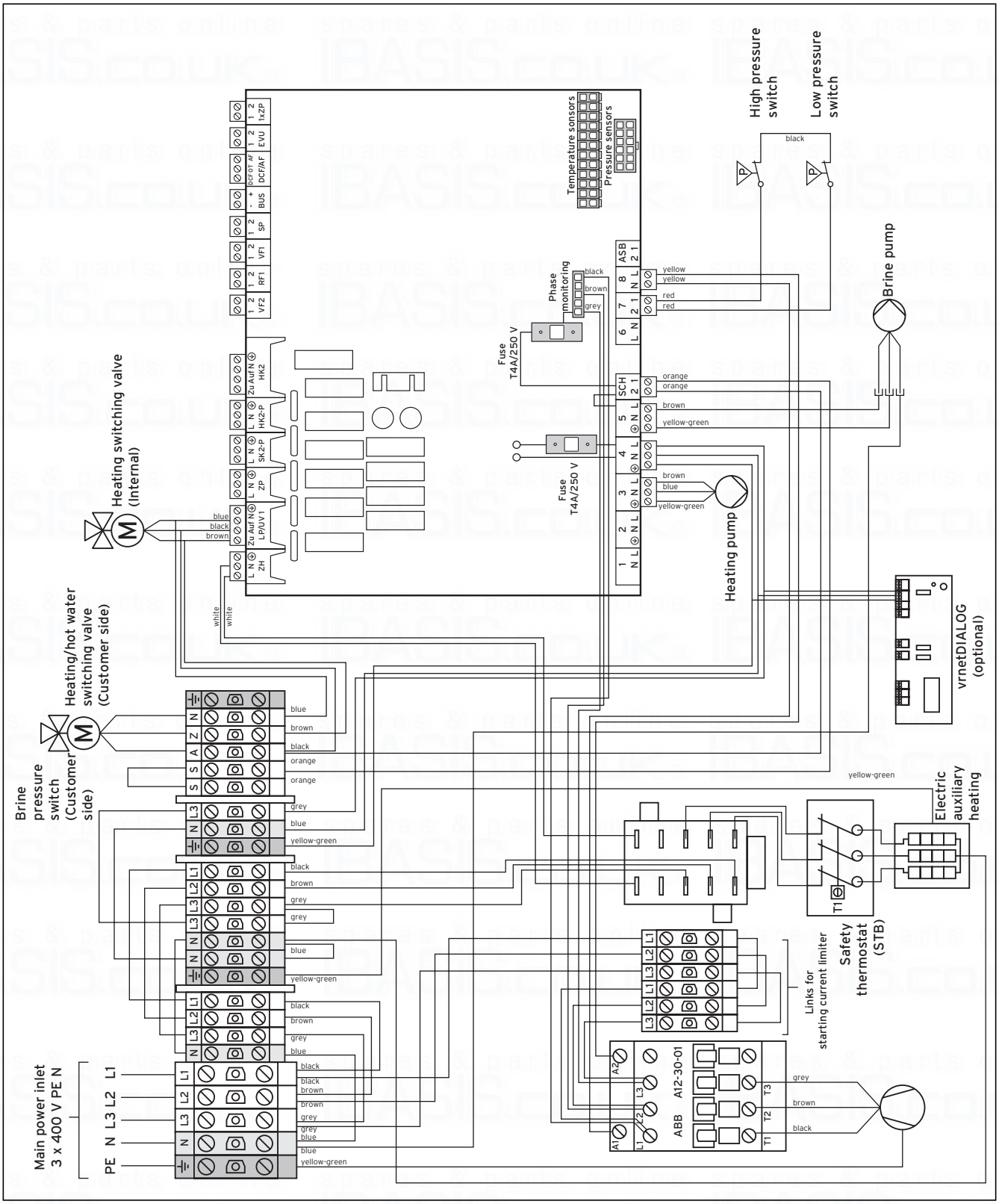

Fig. 3, Appendix, Electrical circuit diagram - VWS

Electrical circuit diagram - VWW

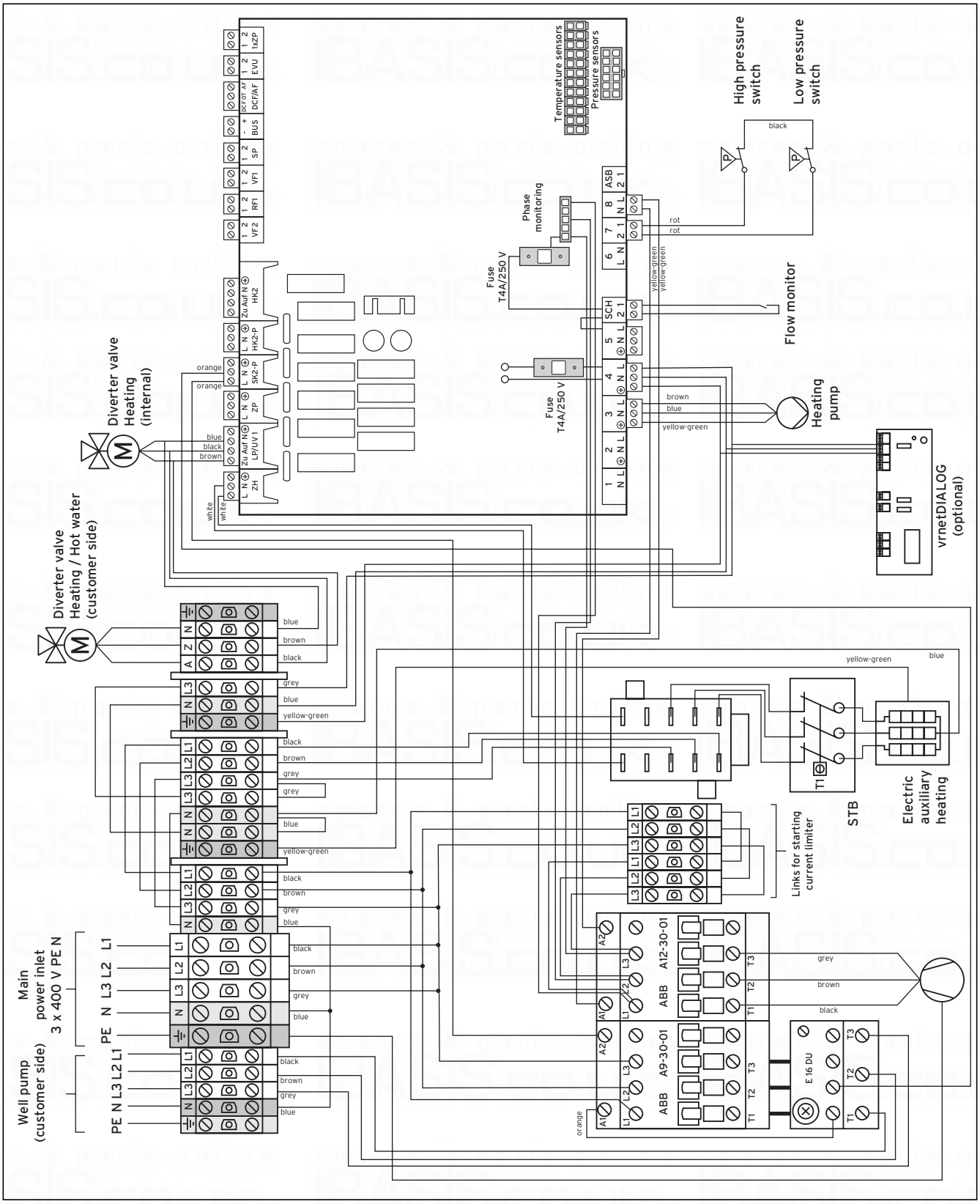

Fig. 4, Appendix, Electrical circuit diagram - VWW

spares & parts online
IBASIS.CO.UK

spares & parts online
IBASIS.CO.UK

Vaillant Ltd
Nottingham Road ▮ Belper ▮ Derbyshire ▮ DE56 1JT
Telephone 0845 602 2922 ▮ www.vaillant.co.uk ▮ info@vaillant.co.uk

0020057444_01 GB 072008

spares & parts online IBASIS.CO.UK