For the competent person

Installation and maintenance instructions

ecoTEC plus

VU

GB, IE

Publisher/manufacturer
Vaillant GmbH
Berghauser Str. 40 ▮ D-42859 Remscheid
Tel. +49 21 91 18-0 ▮ Fax +49 21 91 18-28 10
info@vaillant.de ▮ www.vaillant.de

Vaillant

Contents

1 Safety ... 3
1.1 Action-related warnings ... 3
1.2 Intended use ... 3
1.3 General safety information ... 3
1.4 Regulations (directives, laws, standards) ... 5
2 Notes on the documentation ... 6
2.1 Observing other applicable documents ... 6
2.2 Storing documents ... 6
2.3 Applicability of the instructions ... 6
3 Product description ... 6
3.1 Serial number ... 6
3.2 Information on the identification plate ... 6
3.3 CE label ... 6
3.4 Functional elements ... 7
4 Installation ... 7
4.1 Transporting the unit ... 7
4.2 Unpacking the product ... 7
4.3 Checking the scope of delivery ... 7
4.4 Dimensions ... 8
4.5 Minimum clearances ... 8
4.6 Clearance from combustible components ... 8
4.7 Using the installation template ... 8
4.8 Wall-mounting the product ... 8
4.9 Removing/installing the front casing ... 9
4.10 Removing/installing the side section ... 9
5 Installation ... 9
5.1 Preparing for installation ... 9
5.2 Connecting the heating flow and heating return ... 10
5.3 Gas connection ... 10
5.4 Connecting the condensate drain pipework ... 10
5.5 Installing the air/flue pipe ... 11
5.6 Electrical installation ... 11
6 Operation ... 12
6.1 Operating concept ... 12
6.2 Calling up the installer level ... 12
6.3 Live Monitor (status codes) ... 12
7 Start-up ... 13
7.1 Carrying out the initial start-up ... 13
7.2 Running the installation assistants ... 13
7.3 Restarting the installation assistants ... 14
7.4 Test programmes ... 14
7.5 Checking the factory setting ... 14
7.6 Checking and treating the heating water/filling and supplementary water ... 14
7.7 Switching on the product ... 15
7.8 Filling the condensate siphon ... 15
7.9 Checking the gas connection pressure (gas flow pressure) ... 15
7.10 Checking the CO_2 content ... 16
7.11 Setting the CO_2 content ... 16
7.12 Checking the leak-tightness of the flue gas system and for flue gas recirculation ... 16
7.13 Checking function and leak-tightness ... 16
7.14 Checking the heating mode ... 16
8 Adapting the unit to the heating installation ... 16
8.1 Burner anti-cycling time ... 17
9 Handing the product over to the operator ... 17
10 Inspection and maintenance ... 17
10.1 Observing inspection and maintenance intervals ... 17
10.2 Procuring spare parts ... 17
10.3 Removing the gas-air mixture unit ... 17
10.4 Cleaning the heat exchanger ... 18
10.5 Checking the burner ... 18
10.6 Checking the ignition electrode ... 18
10.7 Cleaning the condensate siphon ... 19
10.8 Installing the gas-air mixture unit ... 19
10.9 Draining the product ... 19
10.10 Completing inspection and maintenance work ... 19
11 Troubleshooting ... 19
11.1 Rectifying faults ... 19
11.2 Calling up the fault memory ... 19
11.3 Deleting the fault memory ... 19
11.4 Preparing the repair work ... 19
11.5 Replacing defective components ... 19
11.6 Completing repair work ... 21
12 Decommissioning the product ... 21
13 Customer service ... 21
Appendix ... 22
A Inspection and maintenance work – Overview ... 22
B Installer level – Overview ... 22
C Overview of diagnostics codes ... 25
D Status codes – Overview ... 28
E Overview of fault codes ... 29
F Connection diagram ... 31
G Connection diagram, 30 kW ... 32
H Opening in the flue pipe ... 33
H.1 Positioning of the opening of a fan-supported flue gas pipe ... 33
H.2 Text from BS 5440-1 on fan-supported flue gas pipes ... 34
H.3 Opening of the flue pipe below eaves and balconies ... 34
I Commissioning Checklist ... 35
J Technical data ... 39
Index ... 43

1 Safety

1.1 Action-related warnings

Classification of action-related warnings

The action-related warnings are classified in accordance with the severity of the possible danger using the following warning signs and signal words:

Warning symbols and signal words

Danger!
Imminent danger to life or risk of severe personal injury

Danger!
Risk of death from electric shock

Warning.
Risk of minor personal injury

Caution.
Risk of material or environmental damage

1.2 Intended use

There is a risk of injury or death to the user or others, or of damage to the product and other property in the event of improper use or use for which it is not intended.

The product is intended as a heat generator for closed heating installations and for hot water generation.

The products referred to in these instructions must only be installed and operated in conjunction with the flue pipe accessories listed in other applicable documents.

Exceptions: For C63 and B23P installation types, follow the specifications in these instructions.

Intended use includes the following:

– observance of accompanying operating, installation and servicing instructions for the product and any other system components
– installing and fitting the product in accordance with the product and system approval
– compliance with all inspection and maintenance conditions listed in the instructions.

Intended use also covers installation in accordance with the IP class.

Any other use that is not specified in these instructions, or use beyond that specified in this document shall be considered improper use. Any direct commercial or industrial use is also deemed to be improper.

Caution.

Improper use of any kind is prohibited.

1.3 General safety information

1.3.1 Required personnel qualifications

Improper work carried out on the product may cause material damage to the complete installation and, as a consequence, may even cause personal injury.

- You should therefore only work on the product if you are an authorised competent person.
- Carry out all work using the technology currently available.

1.3.2 Risk of injury during transport due to a high product weight.

- Make sure that the product is transported by at least two people.

1.3.3 Risk of death from escaping gas

What to do if you smell gas in the building:

- Avoid rooms that smell of gas.
- If possible, open doors and windows fully and ensure adequate ventilation.
- Do not use naked flames (e.g. lighters, matches).
- Do not smoke.
- Do not use any electrical switches, mains plugs, doorbells, telephones or other communication systems in the building.
- If it is safe to do so, close the emergency control valve or the main isolator.
- If possible, close the gas isolator cock on the product.
- Warn other occupants in the building by yelling or banging on doors or walls.
- Leave the building immediately and ensure that others do not enter the building.
- Notify the gas supply company or National Grid Transco +44 (0) 800 111999 by telephone from outside of the building.

1.3.4 Risk of death from escaping flue gas

If you operate the product with an empty condensate siphon, flue gas may escape into the room air.

- In order to operate the product, ensure that the condensate siphon is always full.

1.3.5 Risk of death due to blocked or leaking flue gas routes

Installation errors, damage, tampering, unauthorised installation sites or similar can cause flue gas to escape and result in a risk of poisoning.

What to do if you smell flue gas in the property:

- Open all accessible doors and windows fully to provide ventilation.
- Switch off the product.
- Check the flue gas routes in the product and the flue gas diversions.

1.3.6 Risk of poisoning and burns caused by escaping hot flue gases

- Only operate the product if the air/flue pipe has been completely installed.
- With the exception of short periods for testing purposes, only operate the product when the front casing is installed and closed.

1.3.7 Risk of death due to explosive and flammable materials

- Do not use or store explosive or flammable materials (e.g. petrol, paper, paint) in the installation room of the product.

1.3.8 Risk of death from electric shock

There is a risk of death from electric shock if you touch live components.

Before commencing work on the product:

- Disconnect the product from the power supply by switching off all power supplies (electrical partition with a contact opening of at least 3 mm, e.g. fuse or line protection switch).
- Secure against being switched back on again.
- Wait for at least 3 minutes until the condensers have discharged.
- Check that there is no voltage.

1.3.9 Risk of death due to lack of safety devices

The schematic drawings included in this document do not show all safety devices required for correct installation.

- Install the necessary safety devices in the system.
- Observe the applicable national and international laws, standards and guidelines.

1.3.10 Risk of poisoning caused by insufficient supply of combustion air

Conditions: Open-flued operation

- Ensure that the air supply to the product's installation room is permanently unobstructed and sufficient in accordance with the relevant ventilation requirements.

1.3.11 Risk of death due to cabinet-type casing

Cabinet-type casing can give rise to dangerous situations when used on a product which is operated with an open flue.

- Ensure that the product is supplied with sufficient combustion air.

1.3.12 Risk of corrosion damage due to unsuitable combustion and room air

Sprays, solvents, chlorinated cleaning agents, paint, adhesives, ammonia compounds, dust or similar substances may lead to corrosion on the product and in the air/flue pipe.

- Ensure that the supply of combustion air is always free of fluorine, chlorine, sulphur, dust, etc.
- Ensure that no chemical substances are stored at the installation site.
- Ensure that the combustion air is not routed through chimneys which have previously been used with floor-standing oil-fired boilers, or with other boilers,

which could cause soot to build up in the chimney.

- If you are installing the product in hairdressing salons, painter's or joiner's workshops, cleaning businesses or similar locations, choose a separate installation room in which a combustion air supply is ensured that is technically free of chemical substances.

1.3.13 Risk of material damage caused by frost

- Do not install the product in rooms prone to frost.

1.3.14 Risk of being burned or scalded by hot components

- Only carry out work on these components once they have cooled down.

1.3.15 Risk of material damage caused by using an unsuitable tool

- Use the correct tool to tighten or loosen screw connections.

1.4 Regulations (directives, laws, standards)

- Observe the national regulations, standards, guidelines and laws.

2 Notes on the documentation

2.1 Observing other applicable documents

► You must observe all the operating and installation instructions included with the system components.

2.2 Storing documents

► Pass these instructions and all other applicable documents on to the system operator.

2.3 Applicability of the instructions

These instructions apply only to:

Product article number

	Article number	Gas Council Number
VU 126/6-5 OV (H-GB) ecoTEC plus	0010015669	41-044-71
VU 156/6-5 OV (H-GB) ecoTEC plus	0010015670	41-044-72
VU 186/6-5 OV (H-GB) ecoTEC plus	0010015671	41-044-73
VU 246/6-5 OV (H-GB) ecoTEC plus	0010015672	41-044-74
VU 306/6-5 OV (H-GB) ecoTEC plus	0010015673	41-044-75

3 Product description

3.1 Serial number

The serial number is located on a plate behind the front flap. The plate is in a plastic fish plate. You can also display the serial number in the display.

3.2 Information on the identification plate

The identification plate is mounted on the underside of the product in the factory.

The identification plate keeps record of the country in which the product is to be installed.

Information on the identification plate	Meaning
	Barcode with serial number
Serial number	For quality control purposes; 3rd and 4th digits = year of production For quality control purposes; 5th and 6th digits = week of production For identification purposes; 7th to 16th digits = product article number For quality control purposes; 17th to 20th digits = place of manufacture
ecoTEC plus	Product description
2H, G20 - 20 mbar (2 kPa)	Factory setting for type of gas and gas connection pressure
Cat.	Approved gas category
Condensing technology	Efficiency class of the boiler in accordance with EC Directive 92/42/EEC
Type: Xx3(x)	Permissible flue gas connections
PMS	Maximum water pressure in heating mode
PMW	Maximum water pressure in hot water handling mode
V/Hz	Electric connection
W	Max. electrical power consumption
IP	Level of protection
	Heating mode
*P*n	Nominal heat output range in heating mode
*P*nc	Nominal heat output range in heating mode (condensing technology)
P	Nominal heat output range in hot water handling mode
*Q*n	Nominal heating load range in heating mode
*Q*nw	Nominal heating load range in hot water handling mode
$T_{max.}$	Max. flow temperature
NOx	NOx class for the product
Code (DSN)	Specific product code
	→ "CE label" section
	Read the instructions.
	→ "Recycling and disposal" section
GC no.	Gas council number

3.3 CE label

The CE label shows that the products comply with the basic requirements of the applicable directives as stated on the identification plate.

The declaration of conformity can be viewed at the manufacturer's site.

3.4 Functional elements

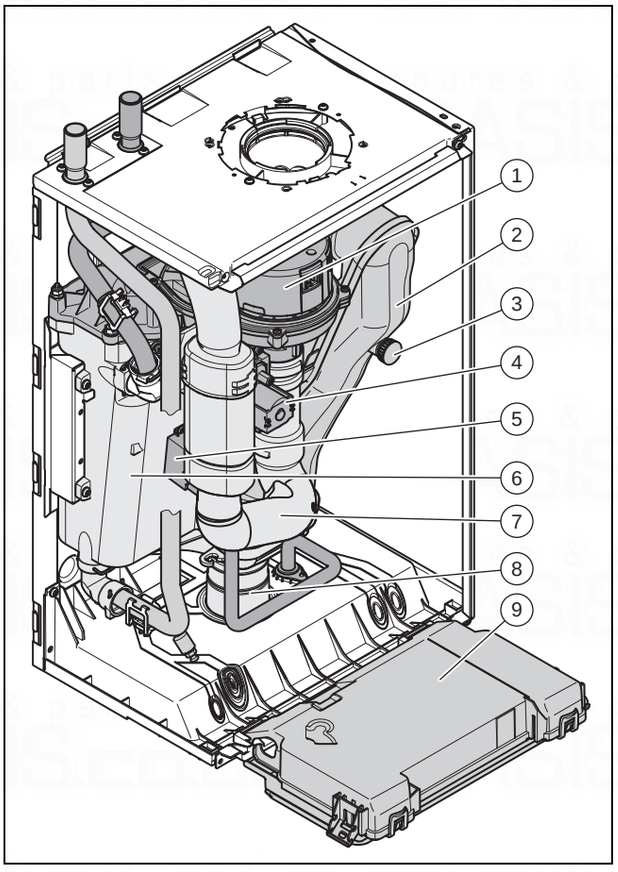

1	Gas-air mixture unit	6	Heat exchanger
2	Flue pipe	7	Air intake pipe
3	Flue gas analysis point	8	Condensate siphon
4	Gas valve	9	Electronics box
5	Ignition transformer		

4 Installation

4.1 Transporting the unit

Important: With regard to the regulations of 1992 concerning the manual handling of loads, the unit exceeds the weight that can be lifted by a single person.

4.1.1 General

- ► Hold the load as close as possible to your body. Avoid rotational movements. Instead, reposition your feet.
- ► If the unit is being lifted by two persons, ensure your movements are coordinated during lifting.
- ► Avoid bending your upper body – do not lean forwards or to the side.
- ► Wear suitable non-slip protective gloves in order to protect your hands against sharp edges. Ensure that you are carrying the load securely.
- ► If required, get somebody to assist you in this.

4.1.2 Unloading the box from the delivery van

- ► It is recommended that two people lift the unit together.
- ► Lift the box using the straps provided.
- ► Use safe lifting techniques – keep your back straight and bend your legs at the knee.
- ► Hold the load as close as possible to your body.
- ► If the unit is being lifted by two persons, ensure your movements are coordinated during lifting.
- ► If required, get somebody to assist you in this.

4.2 Unpacking the product

1. Remove the product from its box.
2. Remove the protective film from all of the product's components.

4.3 Checking the scope of delivery

- ► Check that the scope of delivery is complete and intact.

4.3.1 Scope of delivery

Number	Description
1	Heat generator
1	Hanging bracket
1	Gas isolator cock
1	Gas pipe
1	Condensate drain hose
1	Installation template
1	Enclosed documentation

4.4 Dimensions

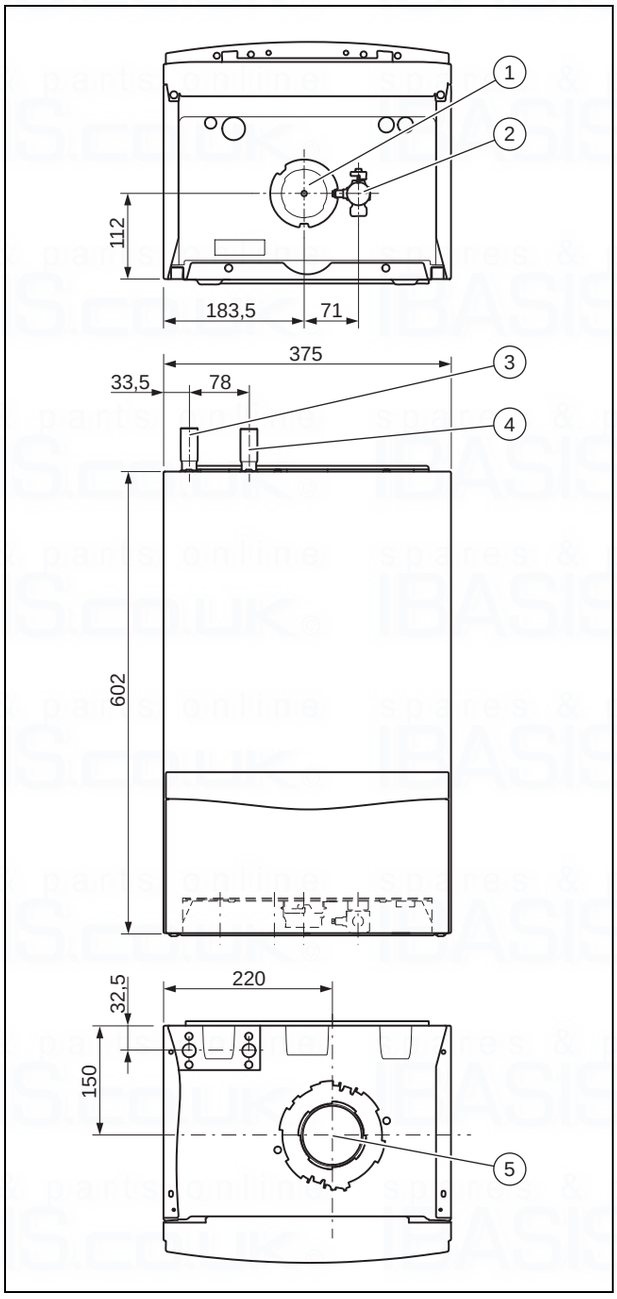

1	Condensate discharge	4	Heating flow
2	Gas connection	5	Flue pipe connection
3	Heating return		

4.5 Minimum clearances

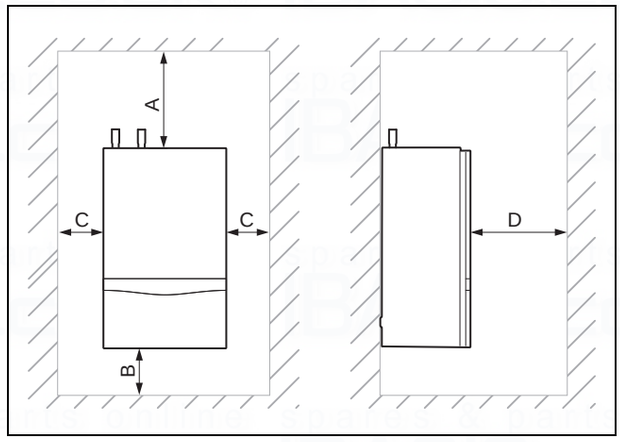

	Minimum clearance
A	150 mm
B	150 mm
C	5 mm
D	600 mm

4.6 Clearance from combustible components

It is not necessary to maintain a clearance between the product and components made of combustible materials.

4.7 Using the installation template

► Use the installation template to ascertain the locations at which you need to drill holes and make breakthroughs.

4.8 Wall-mounting the product

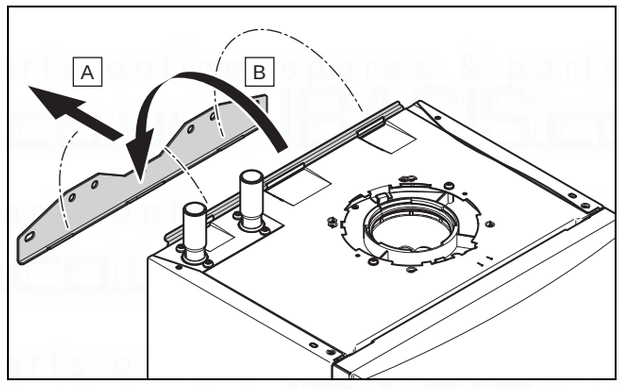

1. Check whether the wall has sufficient load-bearing capacity to bear the operational weight of the product.
2. Check if the supplied fixing material may be used for the wall.

Conditions: The load-bearing capacity of the wall is sufficient, The fixing material may be used for the wall

► Wall-mount the product as described.

Conditions: The load-bearing capacity of the wall is not sufficient

► Ensure that wall-mounting apparatus on-site has a sufficient load-bearing capacity. Use individual stands or primary walling, for example.

► Do not wall-mount the product if you cannot provide wall-mounting apparatus with a sufficient load-bearing capacity.

Conditions: The fixing material may not be used for the wall

► Wall-mount the product as described using the permitted fixing material provided on-site.

4.9 Removing/installing the front casing

4.9.1 Removing the front casing

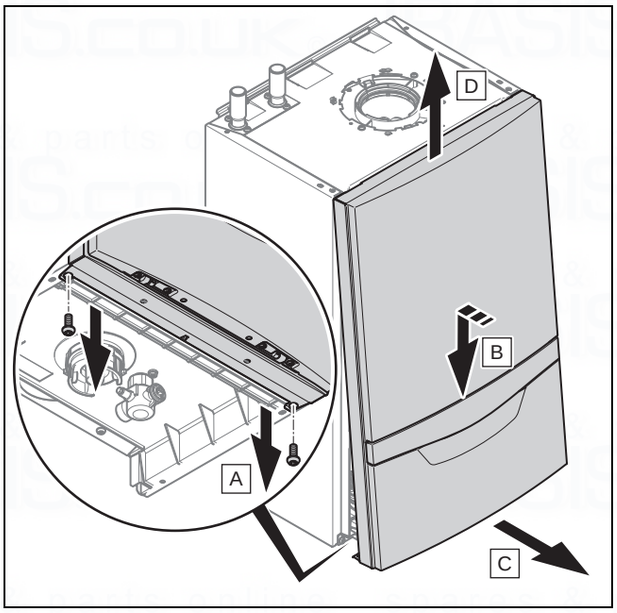

1. Undo the two screws **(1)**.
2. Gently press the front casing backwards in the centre and pull it downwards on the lower edge so that the retaining clip is released.
3. Pull the front casing forwards at the bottom edge.
4. Lift the front casing upwards from the retainers.

4.9.2 Installing the front casing

1. Place the front casing on the upper retainer.
2. Press the front casing onto the product so that the retainer bracket clicks into place.
3. Secure the front casing by tightening both screws.

4.10 Removing/installing the side section

4.10.1 Removing the side section

Caution.

Risk of material damage caused by mechanical deformation.

Removing **both** side sections may cause mechanical distortion in the product, which may cause damage to the piping, for example, and potentially result in leaks.

► Always remove **only one** side section – never both side sections at the same time.

Note

If there is sufficient lateral clearance (at least 70 mm), you can remove the side section to facilitate maintenance or repair work.

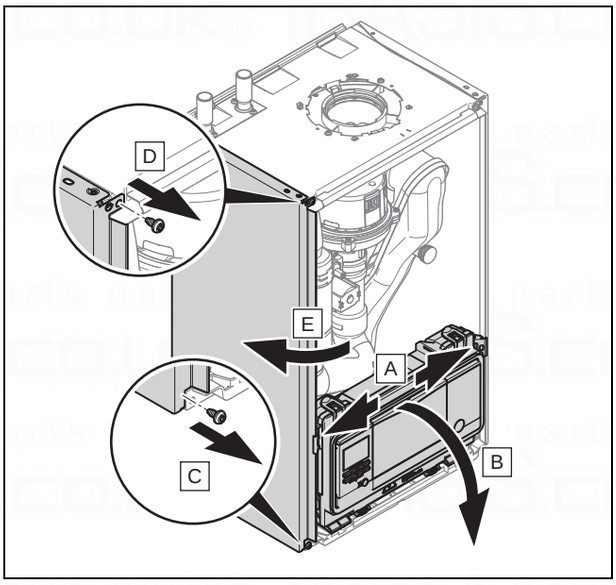

1. Tilt the electronics box forward.
2. Hold on to the side section so that it cannot fall, and unscrew both screws, one from the top and one from the bottom.
3. Tilt the side section to the outside and take it out towards the top.

4.10.2 Installing the side section

1. Push the side section into the recesses in the back wall.
2. Tilt the side section towards the product.
3. Screw the two screws into the side section, one at the top and one at the bottom.
4. Fold up the electronics box.

5 Installation

5.1 Preparing for installation

Danger!

Risk of scalding and/or damage due to incorrect installation leading to escaping water.

Stresses in the supply line can cause leaks.

► Make sure there is no voltage in the supply lines when they are installed.

Caution.

Risk of damage caused by corrosion.

If non-diffusion-tight plastic pipes are used in the heating installation, this may cause air to enter the heating water and corrosion of the heat generation circuit and the boiler.

- If using non-diffusion-tight plastic pipes in the heating installation, separate the system by installing an external heat exchanger between the boiler and the heating installation.

Caution.

Risk of material damage due to heat transfer during soldering.

- Do not solder the connection pieces if the connection pieces are screwed to the service valves.

Caution.

Risk of damage caused by incorrect gas installation.

Excess test pressure or operating pressure may cause damage to the gas valve.

- Check the leak-tightness of the gas valve using a maximum pressure of 1.1 kPa (110 mbar).

- Flush the heating installation thoroughly prior to installation.
- Make sure that the existing gas meter is capable of passing the rate of gas supply required.
- Install the following components:
  - Drain cocks at the lowest points of the heating installation
  - A heating pump in the heating flow
  - A bypass that is at least 1.5 m away from the product
  - A stop cock in the gas line

5.2 Connecting the heating flow and heating return

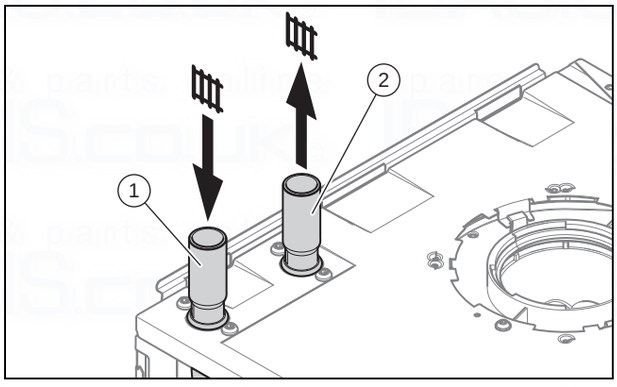

1 Heating return connection
2 Heating flow connection

1. Establish the heating connections in accordance with the applicable standards.
2. Purge the gas line before start-up.
3. Check whether the connections (→ Page 16) are leak-tight.

5.3 Gas connection

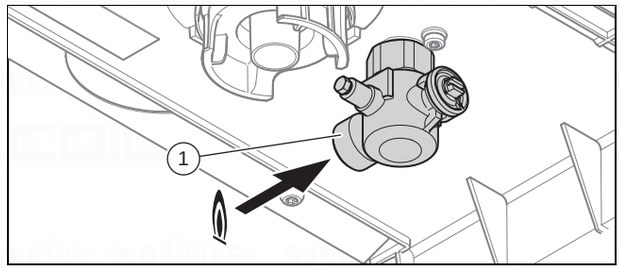

1. Establish the gas connection **(1)** in accordance with the applicable standards.
2. Purge the gas line before start-up.
3. Check whether the connections (→ Page 16) are leak-tight.

5.4 Connecting the condensate drain pipework

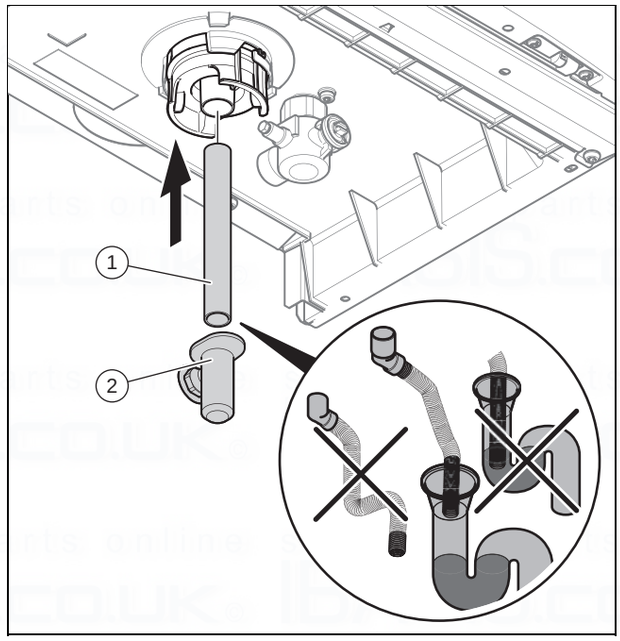

- Follow the instructions listed here and observe directives and local regulations on condensate discharge.
- Use PVC or another material that is suitable for draining the non-neutralised condensate.
- If it cannot be guaranteed that the materials the drain lines are made from are suitable, install a system for neutralising the condensate.
- Ensure that the connection between the condensate drain pipework and the drain hose is not air-tight.

Note

The condensate drain pipework must have a continuous fall (45 mm per metre) and should whenever possible terminate at a suitable drain point within the heated envelope of the building that will remain frost free under long periods of low external temperatures.

- During installation remove all burs from inside of cut pipe work and avoid excessive adhesive which may trap small pockets of water close to the pipe wall which can freeze and build into a larger ice plug.

► As with other pipe work insulate the condensate discharge pipe to minimise any risk of freezing and beware when crossing cavities that the fall is maintained and the pipe sleeved.

You can find further information in BS 6789: "Specification for installing and maintaining gas-fired boilers with a nominal heat loading less than 70 kW".

5.5 Installing the air/flue pipe

Caution.

Risk of poisoning due to escaping flue gas.

Mineral-oil-based greases can damage the seals.

► Instead of grease, use only water or commercially available soft soap to aid installation.

1. You can find out which air/flue pipes may be used by consulting the enclosed air/flue pipe installation manual.
2. Install the flue gas pipe in accordance with the installation instructions that are included in the scope of delivery for the air/flue pipe.

5.6 Electrical installation

Danger!

Risk of death from electric shock!

The mains connection terminals L and N remain live even if the product is switched off:

► Switch off the power supply.

► Secure the power supply against being switched on again.

5.6.1 Opening the electronics box

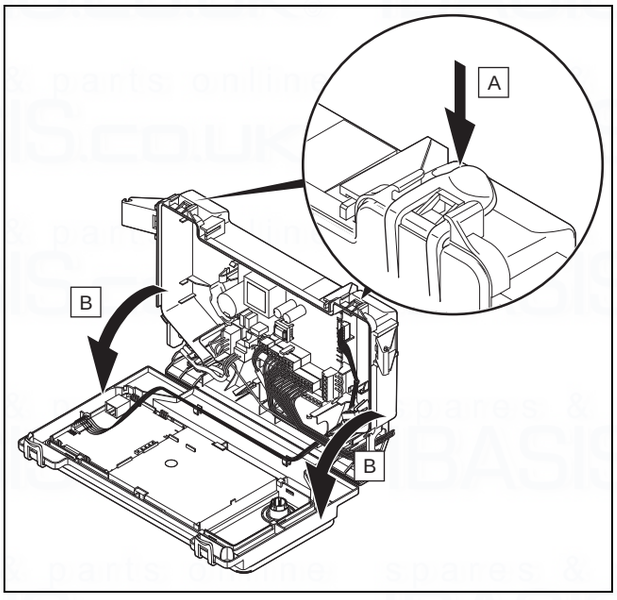

► Follow the instructions in the specified sequence.

5.6.2 Cable route

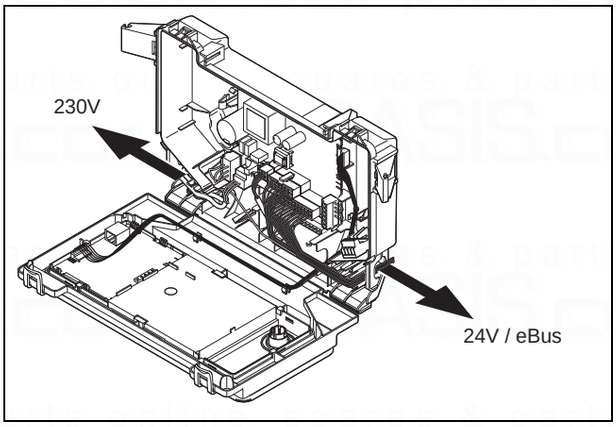

1 24-V eBUS cable route

2 230-V eBUS cable route

5.6.3 Carrying out the wiring

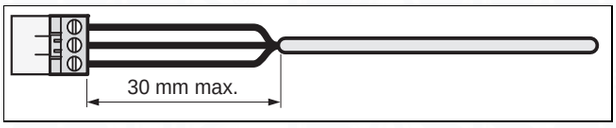

1. Shorten the connection cables to the appropriate lengths to prevent them from causing damage inside the electronics box.
2. Screw the plug to the connection cable.
3. Plug the plug into the slot provided on the PCB.

5.6.4 Establishing the power supply

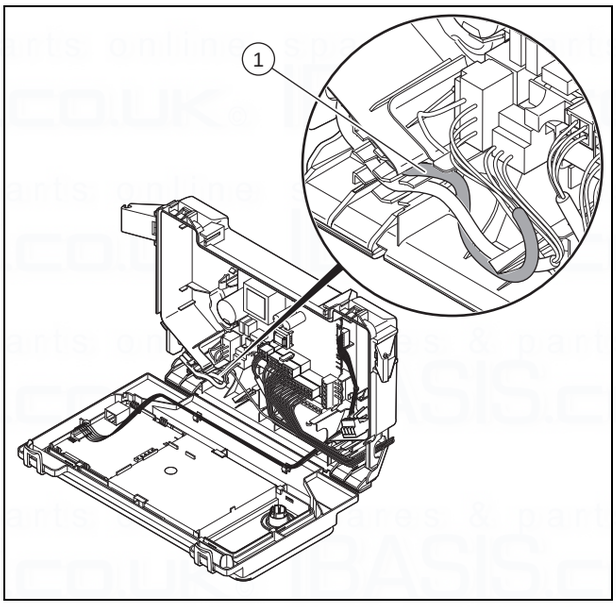

1. Observe all valid regulations.
2. Ensure that the rated mains voltage is 230 V.
3. Set up a fixed connection and install a partition with a contact opening of at least 3 mm (e.g. fuses or power switches).

4. Provide one common electricity supply for the boiler and for the corresponding controller:
   – Power supply: Single-phase, 230 V, 50 Hz
   – Fuse protection: ≤ 3 A
5. Open the electronics box. (→ Page 11)
6. Observe the routing of the power supply cable **(1)** in the electronics box in order to guarantee the strain relief.

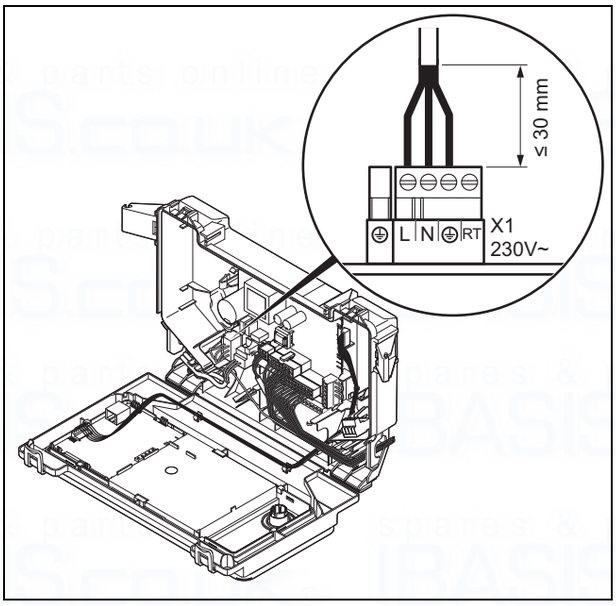

7. Carry out the wiring. (→ Page 11)
8. Close the electronics box.
9. Make sure that access to the mains connection is always available and is not covered or blocked.

5.6.5 Connecting controllers to the electronic system

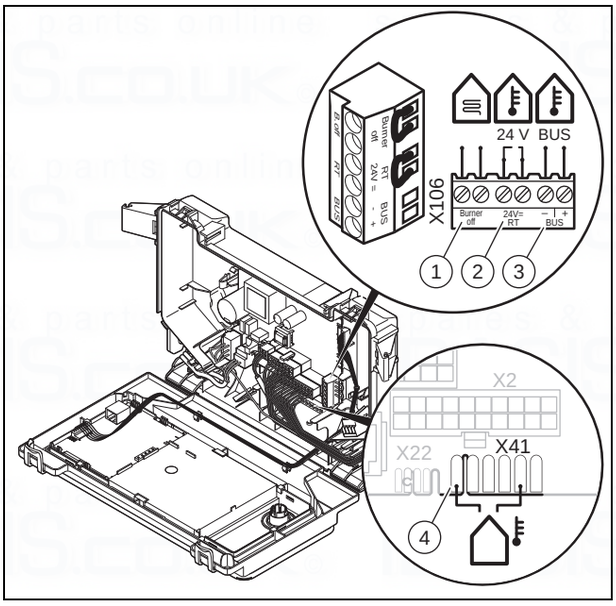

1	Safety thermostat for floor-standing heating	3	eBUS controller or radio receiver unit
2	24 V controller	4	Outside temperature sensor, wired

1. Open the electronics box. (→ Page 11)
2. Carry out the wiring. (→ Page 11)
3. Connect the individual components depending on the type of installation.

Conditions: If installing a multi-circuit controller.

► Change the pump's operating mode **d.18** from Eco (intermittently operating pump) to Comfort (continuously operating pump).

Conditions: When connecting a controller (230 V).

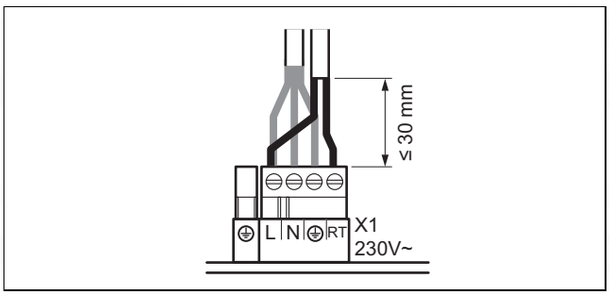

► Connect the controller to the main plug.
► Remove the bridge from the plug **24V=RT**.

4. Close the electronics box.

6 Operation

6.1 Operating concept

The operating concept and the read-off and setting facilities of the operator level are described in the operating instructions.

An overview of the reading and setting options for the installer level is included in the table in the appendix.

Installer level – Overview (→ Page 22)

6.2 Calling up the installer level

1. Only call up the installer level if you are a competent person.
2. Navigate to **Menu** → **Installer level** and confirm by pressing ⊡ .
3. Set the value **17** (code) and confirm by pressing ⊡.

6.3 Live Monitor (status codes)

Menu → Live Monitor

Status codes in the display provide information on the product's current operating status.

Status codes – Overview (→ Page 28)

7 Start-up

7.1 Carrying out the initial start-up

Initial start-up must be carried out by a customer service technician or an authorised competent person using the first-commissioning-checklist. The first-commissioning-checklist in the appendix (→ Page 35) of the installation instructions must be filled out and stored carefully along with the unit's documentation.

- ► Carry out the initial start-up using the first-commissioning-checklist in the appendix.
- ► Fill out and sign the first-commissioning-checklist.

7.2 Running the installation assistants

The installation assistant is displayed whenever the product is switched on until it has been successfully completed.
It provides direct access to the most important check programmes and configuration settings for starting up the product.

To recheck and reset the most important system parameters, call up the **Appliance config.**.

Menu → Installer level Appliance config.

The settings options for more complex systems can be found in the **Diagnostics menu**.

Menu → Installer level Diagnostics menu

- ► Press ⊟ to confirm installation assistant start-up.
  - ◁ All heating and hot water requests are blocked whilst the installation assistant is active.

> **Note**
> If you do not confirm the launch of the installation assistant within 10 seconds of switching the system on, the basic display reappears.

- ► To access the next point, confirm by pressing ⊟ in each case.

7.2.1 Language

- ► Set the required language.
- ► To confirm the set language and to avoid unintentionally changing it, press ⊟ twice to confirm this.

If you have unintentionally set a language that you do not understand, proceed as follows to change it:

- ► Press and hold ⊟ and ⊞ at the same time.
- ► Also briefly press ⊠.
- ► Press and hold ⊟ and ⊞ until the display shows the language setting option.
- ► Select the required language.
- ► Press ⊟ twice to confirm this change.

7.2.2 Filling mode

Filling mode (check programme **P.06**) is activated automatically in the installation assistant for as long as the filling mode appears on the display.

7.2.3 Purging

1. Unlike in the **Check programs** menu, to purge the system, start check programme **P.00** by pressing ⊖ or ⊞.
2. If you need to change the circuit that is to be purged, press ⊟.

7.2.4 Target flow temperature, hot water temperature

1. To set the target flow temperature and hot water temperature, use ⊖ and ⊞.
2. Press ⊟ to confirm this setting.

Conditions: Water hardness: > 3.57 mol/m³, Product with connected cylinder

> **Danger!**
> **Risk of death from Legionella.**
> Legionella multiply at temperatures below 60 °C.
> - ► Ensure that the operator is familiar with all of the Anti-legionella measures in order to comply with the applicable regulations regarding legionella prevention.

- ► Set the hot water temperature.
  - – Water temperature: ≤ 50 °C

7.2.5 Heating partial load

The heating partial load of the product is set to **Auto** at the factory. The product independently determines the optimum heating output depending on the current heat demand of the system. You can retroactively change the setting in the **Diagnostics menu** under **D.000**.

7.2.6 Auxiliary relay and multi-functional module

1. If you have connected additional components to the product, assign these components to the individual relays.
2. In each case, confirm by pressing ⊟.

> **Note**
> This setting can be retroactively changed in the **Diagnostics menu** using **D.026**, **D.027** and **D.028**.

7.2.7 Contact data

- ► If required, store your telephone number in the **Appliance config.** (max. 16 digits/no blank spaces). The operator can view the telephone number.

7.2.8 Ending the installation assistant

- ► Once you have run through the installation assistant successfully, confirm by pressing ⊟.
  - ◁ The installation assistant will close and will not launch again when the product is next switched on.

7.3 Restarting the installation assistants

Menu → Installer level → Start inst. assistant

You can restart the installation assistant at any time by calling it up in the menu.

7.4 Test programmes

Menu → Installer level Test programs

As well as the installation assistants, you can also call up the following test programmes for start-up, service and troubleshooting.

– **Check programs**
– **Function menu**
– **Electronics self-test**

7.5 Checking the factory setting

The product's combustion has been factory tested and is preset for operation with the gas group indicated on the identification plate.

► Check the information about the type of gas indicated on the identification plate and compare this with the type of gas available at the installation location.

Conditions: The product design **is not compatible** with the local gas group

► Do not start up the product.

Conditions: The product design **is compatible** with the local gas group

► Proceed as described below.

7.6 Checking and treating the heating water/filling and supplementary water

Caution.

Risk of material damage due to poor-quality heating water

► Ensure that the heating water is of sufficient quality.

► Before filling or topping up the system, check the quality of the heating water.

Checking the quality of the heating water

► Remove a little water from the heating circuit.
► Check the appearance of the heating water.
► If you ascertain that it contains sedimentary materials, you must desludge the system.
► Use a magnetic rod to check whether it contains magnetite (iron oxide).
► If you ascertain that it contains magnetite, clean the system and apply suitable corrosion-protection measures, or fit a magnet filter.
► Check the pH value of the removed water at 25 °C.
► If the value is below 6.5 or above 8.5, clean the system and treat the heating water.
► Ensure that oxygen cannot get into the heating water. (→ Page 16)

Checking the filling and supplementary water

► Before filling the system, measure the hardness of the filling and supplementary water.

Treating the filling and supplementary water

► Observe all applicable national regulations and technical standards when treating the filling and supplementary water.

Provided the national regulations and technical standards do not stipulate more stringent requirements, the following applies:

You must treat the heating water in the following cases:

– If the entire filling and supplementary water quantity during the operating life of the system exceeds three times the nominal volume of the heating installation, or
– If the guideline values listed in the following table are not met, or
– if the pH value of the heating water is less than 6.5 or more than 8.5.

Total heating output	Water hardness at specific system volume[1)]					
	≤ 20 l/kW		> 20 l/kW ≤ 50 l/kW		> 50 l/kW	
kW	ppm $CaCO_3$	mol/m³	ppm $CaCO_3$	mol/m³	ppm $CaCO_3$	mol/m³
< 50	< 300	< 3	200	2	2	0.02
> 50 to ≤ 200	200	2	150	1.5	2	0.02
> 200 to ≤ 600	150	1.5	2	0.02	2	0.02
> 600	2	0.02	2	0.02	2	0.02

1) Nominal capacity in litres/heating output; in the case of multi-boiler systems, the smallest single heating output is to be used.

Caution.

The use of unsuitable heating water may cause aluminium corrosion and a resulting lack of leak-tightness.

In contrast to steel, grey cast iron or copper, for example, aluminium reacts with alkaline heating water (pH value > 8.5) to produce substantial corrosion.

► When using aluminium, make sure that the pH value of the heating water is between 6.5 and a maximum of 8.5.

Caution.

Risk of material damage if the heating water is treated with unsuitable additives.

Unsuitable additives may cause changes in the components, noises in heating mode and possibly subsequent damage.

► Do not use any unsuitable frost and corrosion protection agents, biocides or sealants.

No incompatibility with our products has been detected to date with proper use of the following additives.

► When using additives, follow the manufacturer's instructions without exception.

We accept no liability for the compatibility of any additive or its effectiveness in the rest of the heating system.

Additives for cleaning measures (subsequent flushing required)

– Fernox F3
– Sentinel X 300
– Sentinel X 400

Additives intended to remain permanently in the system

– Fernox F1
– Fernox F2
– Sentinel X 100
– Sentinel X 200

Additives for frost protection intended to remain permanently in the system

– Fernox Antifreeze Alphi 11
– Sentinel X 500

► If you have used the above-mentioned additives, inform the operator about the measures that are required.
► Inform the operator about the measures required for frost protection.

7.7 Switching on the product

► Switch on the product via the main switch installed on-site.

7.8 Filling the condensate siphon

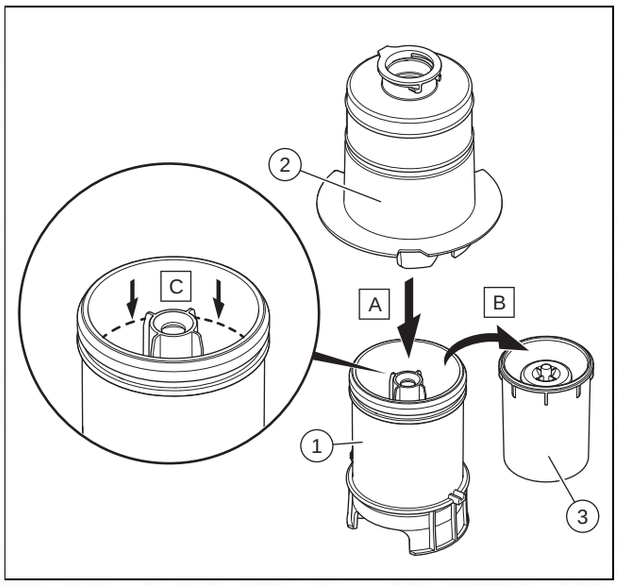

1. Unclip the lower section of the siphon **(1)** from the upper section of the siphon **(2)**.
2. Remove the float **(3)**.
3. Fill the lower section of the siphon with water up to 10 mm below the upper edge of the condensate drain pipework.
4. Re-insert the float **(3)**.

Note
Check whether the float is present in the condensate siphon.

5. Clip the lower section of the siphon **(1)** into the upper section of the siphon **(2)**.

7.9 Checking the gas connection pressure (gas flow pressure)

1. Close the gas isolator cock.

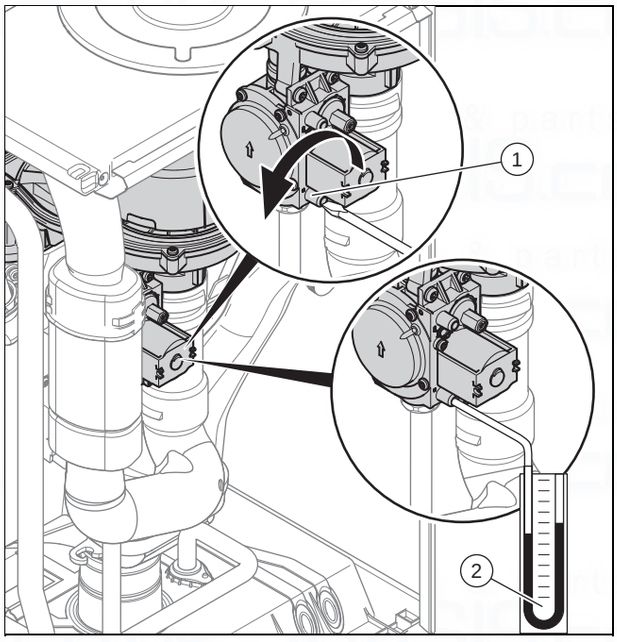

2. Use a screwdriver to undo the sealing screw on the measuring connection **(1)** of the gas valve.
3. Connect a pressure gauge **(2)** to the measuring nipple **(1)**.
4. Open the gas isolator cock.
5. Start up the product with the check programme **P.01**.
6. Measure the gas connection pressure against atmospheric pressure.

Permissible connection pressure

Great Britain	**Natural gas**	**G20**	1.7 … 2.5 kPa (17.0 … 25.0 mbar)

7. Decommission the product.
8. Close the gas isolator cock.
9. Remove the pressure gauge.
10. Tighten the screw on the measuring nipple **(1)**.
11. Open the gas isolator cock.
12. Check the measuring nipple for gas tightness.

Conditions: Gas connection pressure **not** in the permissible range

Caution.

Risk of material damage and operating faults caused by incorrect gas connection pressure.

If the gas connection pressure lies outside the permissible range, this can cause operating faults in and damage to the product.

- ► Do not make any adjustments to the product.
- ► Do not start up the product.

- ► If you are unable to remedy the fault, contact the gas supply company.
- ► Close the gas isolator cock.

7.10 Checking the CO_2 content

1. Start up the product with the check programme **P.01**.
2. Wait at least five minutes until the product reaches its operating temperature.
3. Measure the CO_2 content at the flue gas analysis point.
4. Compare the measured value with the corresponding value in the table.

Settings	Unit	G20 natural gas
CO_2 after 5 minutes in full load mode with front casing closed	Vol.–%	9.2 ± 1.0
CO_2 after 5 minutes in full load mode with front casing removed	Vol.–%	9.0 ± 1.0
Set for Wobbe index W_o	kWh/m³	15
CO in full load mode	ppm	≤ 250
CO/CO_2		≤ 0.0031

5. Set the CO_2 content as required. (→ Page 16)

7.11 Setting the CO_2 content

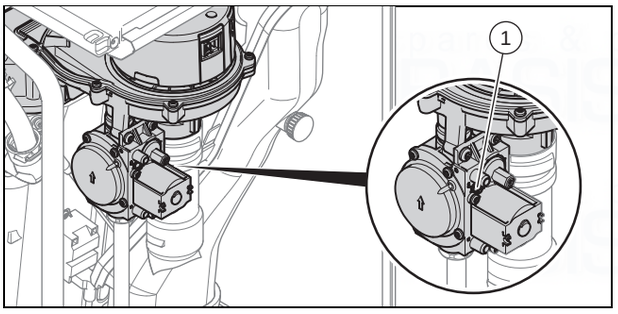

1. Remove the yellow sticker.
2. Remove the blue covering cap **(1)**.
3. Use an Allen key to turn the bolt in order to set the CO_2 content (value with front casing removed).
   - ◁ Turning to the right decreases the value.
   - ◁ Turning to the left increases the value.
4. For natural gas only: Only perform the adjustment in increments of a 1/8 turn and wait approx. one minute after each adjustment until the value stabilises.
5. For liquid gas only: Only perform the adjustment in small increments (approx. 1/16 turn), and wait approx. one minute after each adjustment until the value stabilises.
6. If an adjustment is not possible in the specified adjustment range, you must not start up the product.
7. If this is the case, inform Vaillant Customer Service.
8. Secure the covering cap.
9. Install the front casing. (→ Page 9)

7.12 Checking the leak-tightness of the flue gas system and for flue gas recirculation

1. Check that the flue gas system is intact, in accordance with British Gas TB 200.
2. If the flue gas system is longer than 2 m, we urgently recommend that you test the system for flue gas recirculation as described below.
3. Use the air analysis point **(1)** to check for flue gas recirculation.
4. Use the flue gas measuring instrument.
5. If you discover CO or CO2 in the fresh air, search for a leak in the flue gas system or for the flue gas recirculation.
6. Eliminate the damage.
7. Repeat the above-mentioned test to determine if the fresh air contains CO or CO2.
8. If you cannot eliminate the damage, you must not start up the boiler.

7.13 Checking function and leak-tightness

Before you hand the product over to the operator:

- ► Check the gas line, the flue gas installation, the heating installation and the hot water pipes for leaks.
- ► Check that the air/flue pipe and condensate drain pipework have been installed correctly.
- ► Check that the front casing has been installed correctly.

7.14 Checking the heating mode

1. Activate the heating mode on the user interface.
2. Turn all thermostatic radiator valves on the radiators until they are fully open.
3. Allow the product to operate for at least 15 minutes.
4. Purge the heating installation.
5. Call up the **Live Monitor**.
   – **Menu → Live Monitor**
   Status codes – Overview (→ Page 28)
   - ◁ If the product is working correctly, the display shows **S.04**.

8 Adapting the unit to the heating installation

You can reset/change the system parameters using the following menu points:

Menu → Installer level → Start inst. assistant

You can restart and run through the installation assistant at any time.

Menu → Installer level Appliance config.

You can set/change the most important system parameters in the **Appliance config.** menu point.

Menu → Installer level Diagnostics menu

You can set/change additional system parameters in the **Diagnostics menu** point.

You can find an overview of all the system parameters in the "Installer level – Overview" table in the appendix.

Installer level – Overview (→ Page 22)

8.1 Burner anti-cycling time

To prevent frequent switching on and off of the burner and thus prevent energy losses, an electronic restart lockout is activated for a specific period each time the burner is switched off. The burner anti-cycling time is only active for the heating mode. Hot water handling mode during a burner anti-cycling time does not affect the time function element.

8.1.1 Setting the burner anti-cycling time

- Set the burner anti-cycling time via the diagnostics code.
  Overview of diagnostics codes (→ Page 25)

8.1.2 Resetting the remaining burner anti-cycling time

- Press and hold the fault clearance key for more than three seconds.
  - ◁ ⊹ is shown in the display.

9 Handing the product over to the operator

- When you have finished the installation, attach the sticker supplied (in the operator's language) to the product cover.
- Explain to the operator how the safety devices work and where they are located.
- Inform the operator how to handle the product.
- In particular, draw attention to the safety information which the operator must follow.
- Inform the operator of the necessity to have the product maintained on a regular basis.
- Instruct the operator about measures taken to ensure the supply of combustion air and flue gas pipe.

10 Inspection and maintenance

10.1 Observing inspection and maintenance intervals

- Adhere to the minimum inspection and maintenance intervals. The inspection may require maintenance to be carried out earlier, depending on the results.
  Inspection and maintenance work – Overview (→ Page 22)

10.2 Procuring spare parts

The original components of the product were also certified as part of the declaration of conformity. If you do not use certified Vaillant original spare parts for maintenance or repair work, this voids the conformity of the product. We therefore strongly recommend that you fit Vaillant genuine spare parts. Information about available Vaillant original spare parts is available by contacting the contact address provided on the reverse of this document.

- If you require spare parts for maintenance or repair work, use only Vaillant genuine spare parts.

10.3 Removing the gas-air mixture unit

Note

The gas-air mixture unit consists of three main components:

– Ventilator

– Gas valve

– Burner cover

1. Switch off the product via the main switch.
2. Close the gas isolator cock.
3. Remove the front casing. (→ Page 9)

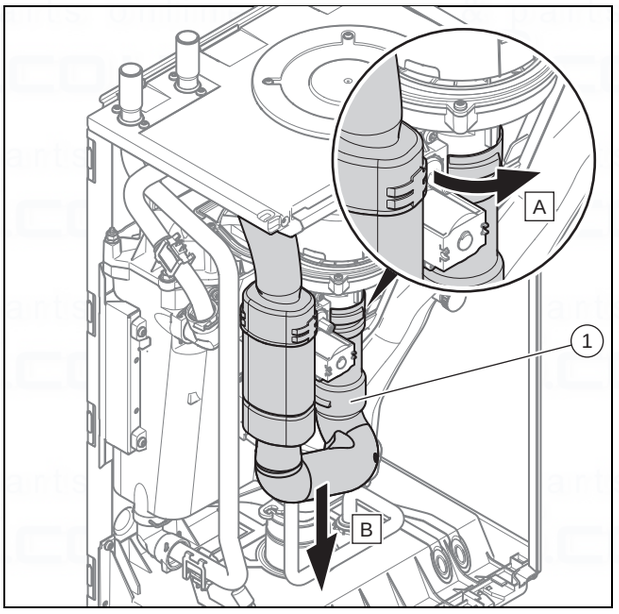

4. Remove the air intake pipe **(1)**.

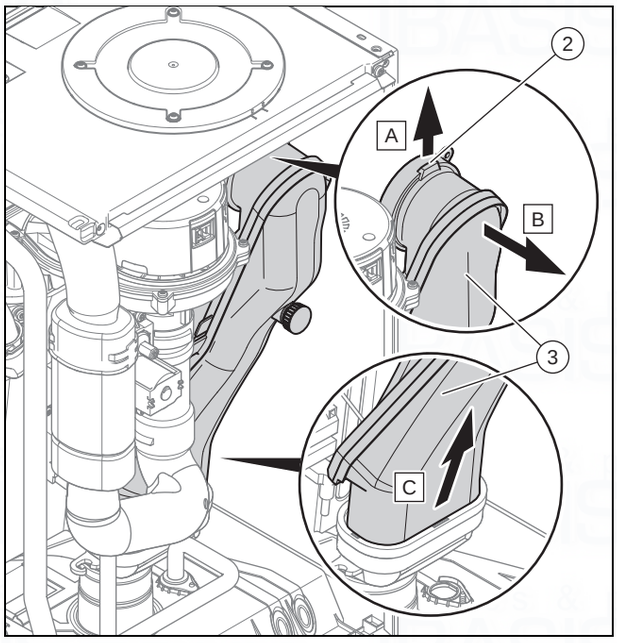

5. Push the clip **(2)** upwards.
6. Remove the flue pipe **(3)**.

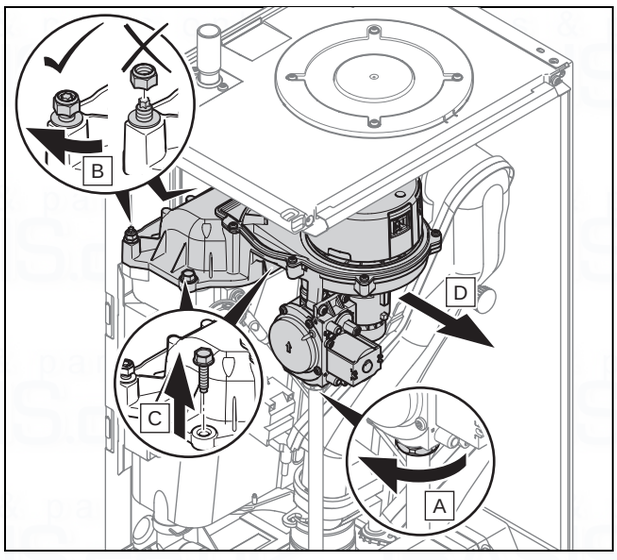

7. Remove the plugs from the gas valve.
8. Remove the gas-air mixture unit.
9. Remove both burner seals from the burner cover.

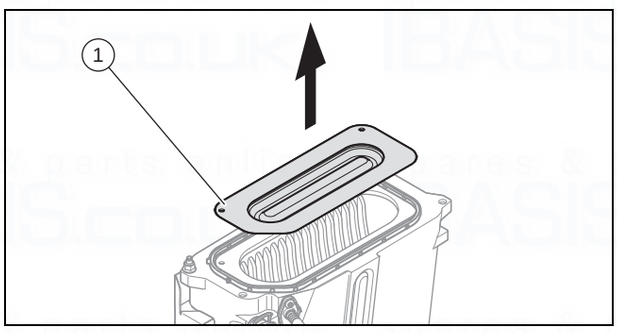

10. Remove the burner **(4)**.

10.4 Cleaning the heat exchanger

1. Check the heat exchanger for damage and dirt.
2. If required, clean and replace the heat exchanger.

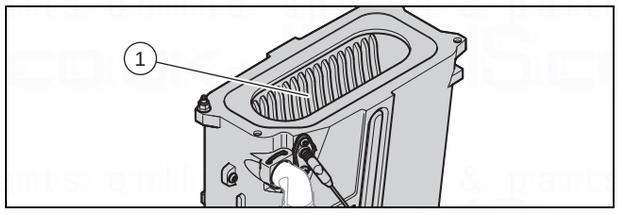

3. Protect the folded down electronics box against sprayed water.
4. Clean the ribs of the heat exchanger **(1)** with water.

◁ The water runs out via the condensate tray.

10.5 Checking the burner

► Check the surface of the burner for damage. If you see any damage, replace the burner.

10.6 Checking the ignition electrode

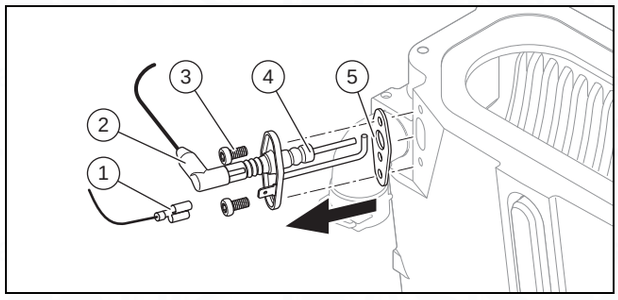

1. Disconnect the connection **(2)** and the earthing cable **(1)**.
2. Remove the fixing screws **(3)**.
3. Carefully remove the electrode from the combustion chamber.
4. Check that the electrode ends **(4)** are undamaged.
5. Check the electrode distance.
   – Clearance for the ignition electrodes: 3.5 … 4.5 mm
6. Make sure that the seal **(5)** is free from damage.

▽ If necessary, replace the seal.

10.7 Cleaning the condensate siphon

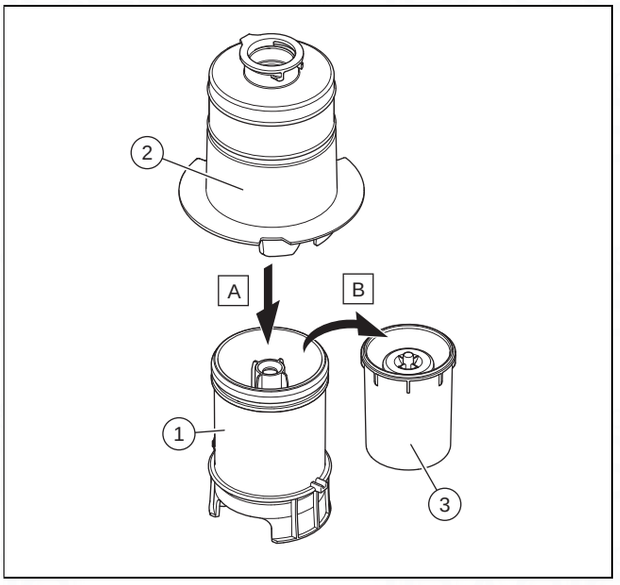

1. Unclip the lower section of the siphon **(1)** from the upper section of the siphon **(2)**.
2. Remove the float **(3)**.
3. Flush out the lower section of the siphon with water.
4. Reinsert the float **(3)**.

Note
Check whether the float is present in the condensate siphon.

5. Clip the lower section of the siphon **(1)** into the upper section of the siphon **(2)**.

10.8 Installing the gas-air mixture unit

1. Install the burner.
2. Install two new burner seals in the burner cover.
3. Install the gas-air mixture unit.
4. Install the flue pipe.
5. Install the air intake pipe.

10.9 Draining the product

1. Close the service valves of the product.
2. Start check programme **P.06**.
3. Open the drain valves.

10.10 Completing inspection and maintenance work

1. Check the gas connection pressure (gas flow pressure). (→ Page 15)
2. Check the CO_2 content. (→ Page 16)

11 Troubleshooting

11.1 Rectifying faults

► If fault codes (**F.XX**) are present, refer to the table in the appendix for advice or use the check programme(s).
Overview of fault codes (→ Page 29)
Installer level – Overview (→ Page 22)

If several faults occur at the same time, the display shows the corresponding fault messages for two seconds each in alternation.

► Press and hold the fault clearance key for more than three seconds.
► If you are unable to clear the fault code and it reappears despite several fault clearance attempts, contact customer service.

11.2 Calling up the fault memory

The last 10 fault messages are stored in the fault memory.

► Navigate to the **Fault list** menu.
◁ The display shows the number of faults that have occurred, the fault numbers and the corresponding plain text display.
► Press ⊟ or ⊞ to call up individual fault messages.

11.3 Deleting the fault memory

1. Navigate to the **Fault list** menu.
2. Press ⊟ twice to delete the fault list.

11.4 Preparing the repair work

1. Decommission the product.
2. Disconnect the product from the power mains.
3. Remove the front casing.
4. Close the gas isolator cock.
5. Close the service valves in the heating flow and in the heating return.
6. Close the service valve in the cold water pipe.
7. Drain the product if you want to replace water-bearing components of the product.
8. Make sure that water does not drip on live components (e.g. the electronics box).
9. Use only new seals.

11.5 Replacing defective components

11.5.1 Replacing the burner

1. Remove the gas-air mixture unit. (→ Page 17)
2. Remove the burner seal.
3. Remove the burner.
4. Install the new burner complete with new seal on the heat exchanger.
5. Install the gas-air mixture unit. (→ Page 19)

11.5.2 Replacing the gas-air mixture unit

1. Remove the gas-air mixture unit. (→ Page 17)
2. Install the new gas-air mixture (→ Page 19).

11.5.3 Replacing the heat exchanger

1. Remove the side section. (→ Page 9)
2. Remove the gas-air mixture unit. (→ Page 17)

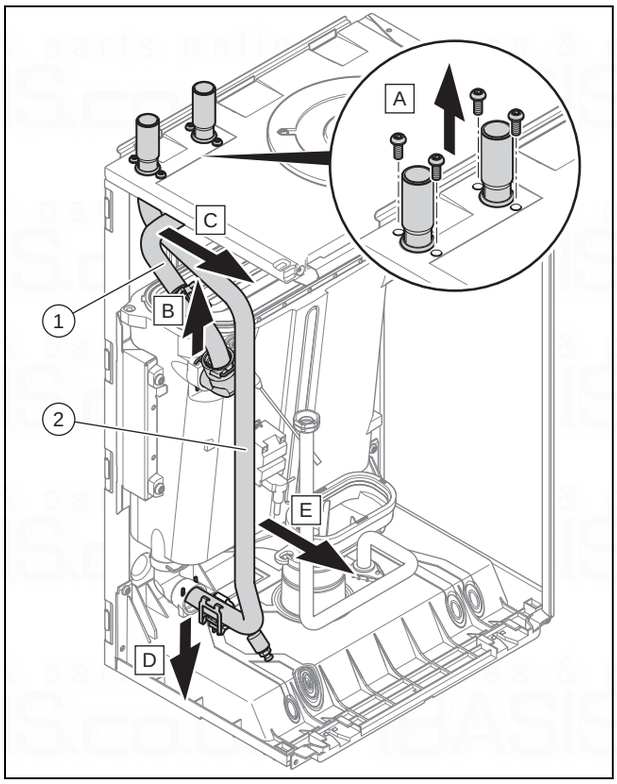

3. Remove the flow pipe **(1)**.
4. Remove the return pipe **(2)**.

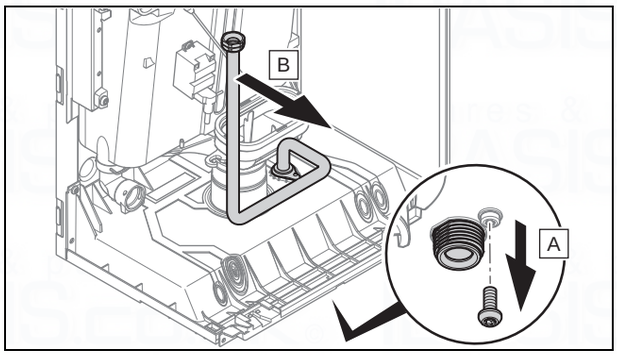

5. Remove the gas pipe.

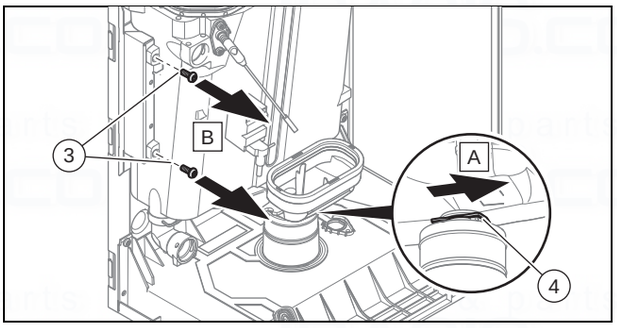

6. Undo the clip underneath the condensate tray **(4)**.
7. Undo the two screws **(3)**.

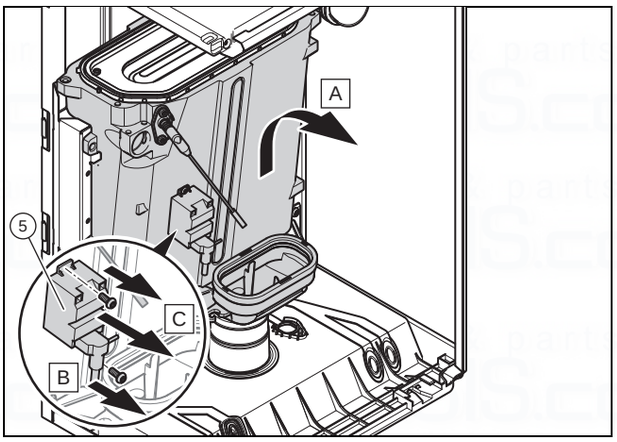

8. Lift the heat exchanger up slightly and remove it together with the condensate tray.
9. Remove the ignition transformer **(5)**.
10. Replace all the seals.
11. Install the new heat exchanger in reverse order.

11.5.4 Replacing the main PCB

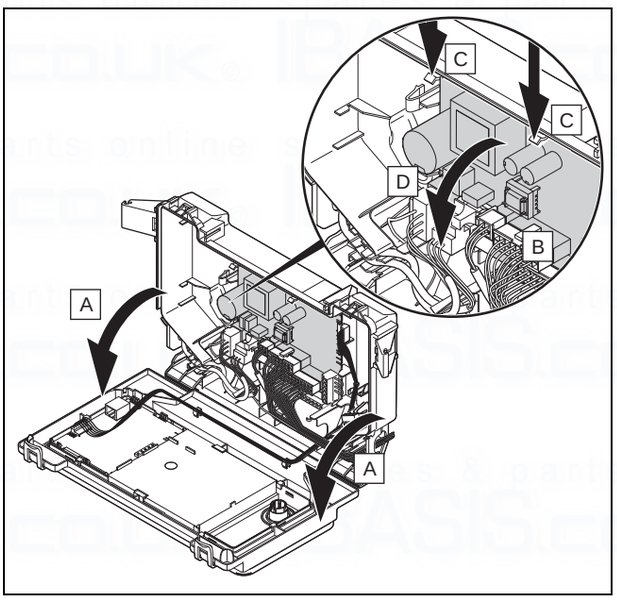

1. Open the electronics box. (→ Page 11)
2. Pull all of the plugs out from the PCB.
3. Undo the clips on the PCB.
4. Remove the PCB.

5. Install the new PCB in such a way that it clicks into the groove at the bottom and into the clip at the top.
6. Plug in the PCB plugs.
7. Close the electronics box.

11.5.5 Replacing the PCB for the user interface

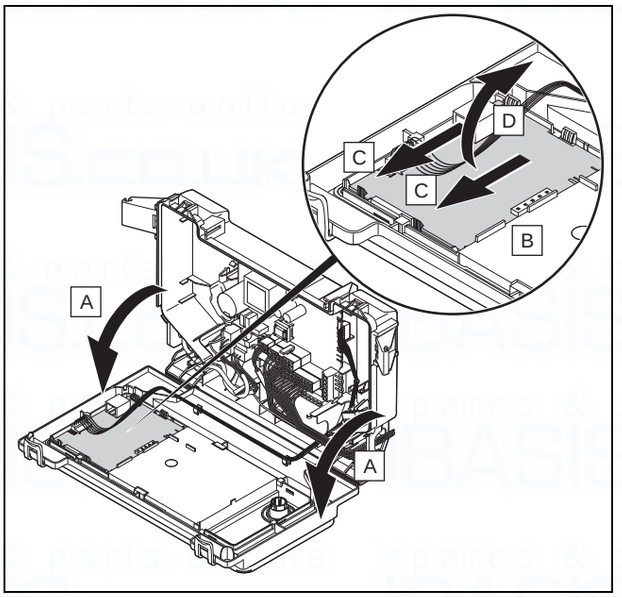

1. Open the electronics box. (→ Page 11)
2. Pull the plug out of the PCB.
3. Undo the clips on the PCB.
4. Remove the PCB.
5. Install the new PCB in such a way that it clicks into the groove at the bottom and into the clip at the top.
6. Plug in the PCB plug.
7. Close the electronics box.

11.6 Completing repair work

- Check that the product functions correctly and is leak-tight (→ Page 16).

12 Decommissioning the product

- Switch off the product.
- Disconnect the product from the power mains.
- Close the gas isolator cock.
- Close the cold water stop valve.
- Drain the product. (→ Page 19)

13 Customer service

To ensure regular servicing, it is strongly recommended that arrangements are made for a Maintenance Agreement. Please contact Vaillant Service Solutions for further details.

Vaillant Service Solutions: 03 30 100-31 43

Appendix

A Inspection and maintenance work – Overview

The table below lists the manufacturer requirements with respect to minimum inspection and maintenance intervals. If national regulations and directives require shorter inspection and maintenance intervals, you should observe these instead of the intervals listed in the table.

No.	Work	Inspection (annual)	Maintenance (must be carried out at regular intervals)*
1	Check the air/flue pipe for leak-tightness and to ensure that it is fastened correctly. Make sure that it is not blocked or damaged and has been installed in accordance with the relevant Installation Manual.	X	X
2	Check the general condition of the product. Remove dirt from the product and from the vacuum chamber.	X	X
3	Visually inspect the general condition of the entire heating cell and, in particular, check for signs of corrosion, soot or other damage. If you notice any damage, carry out maintenance work.	X	X
4	Check the gas connection pressure at maximum heat input. If the gas connection pressure is not within the correct range, carry out maintenance work.	X	X
5	Check the CO_2 content (the air ratio) of the product and, if necessary, adjust it. Keep a record of this.	X	X
6	Disconnect the product from the power mains. Check that the electrical plug connections and other connections are seated correctly and correct these if necessary.	X	X
7	Close the gas isolator cock and the service valves.	X	X
8	Drain the product on the water side.		X
9	Remove the gas-air mixture unit.		X
10	Check the seals in the combustion area. If you see any damage, replace the seals. Replace the burner seal **each time** it is opened and accordingly **each time** maintenance is carried out.		X
11	Clean the heat exchanger.		X
12	Check the burner for damage and replace it if necessary.		X
13	Check the condensate siphon in the product, clean and fill if necessary.	X	X
14	Install the gas-air mixture unit. **Caution: Replace the seals.**		X
15	Open the gas isolator cock, reconnect the product to the power mains and switch the product on.	X	X
16	Open the service valves, fill the product/heating installation.		X
17	Perform a test operation of the product and heating installation, including hot water generation, and purge the system once more if necessary.	X	X
18	Visually inspect the ignition and burner behaviour.	X	X
19	Check the CO_2 content (the air ratio) of the product again.		X
20	Check the product for gas, flue gas, hot water and condensate leaks, and repair if necessary.	X	X
21	Record the inspection/maintenance work carried out.	X	X

***Note: For those appliances which are not part of an annual service agreement/policy, maintenance must be carried out at least every 5 years**

B Installer level – Overview

Setting level	Values		Unit	Increment, select, explanation	Default setting
	Min.	Max.			
Installer level →					
Enter code	00	99	–	1 (competent person code 17)	–
Installer level → List of faults →					
F.XX - F.XX[1]	Current value		–	–	–
Installer level → Test programs →					
Gas type check	Current value		–	Liquid gas, natural gas	–

[1]Fault lists are only displayed, and can only be deleted, if faults have occurred.

Setting level	Values		Unit	Increment, select, explanation	Default setting
	Min.	Max.			
Installer level → Test programs → Check programs →					
P.00 Purging	–	–	–	Yes, No	–
P.01 Maximum load	–	–	–	Yes, No	–
P.02 Minimum load	–	–	–	Yes, No	–
P.04 Heating partial load	–	–	–	Yes, No	–
P.06 Filling mode	–	–	–	Yes, No	–
Installer level → Test programs → Function menu →					
T.02 3-way valve	–	–	–	On, Off	–
T.03 Fan	–	–	–	On, Off	–
T.04 Cyl. charging pump	–	–	–	On, Off	–
T.05 Circulation pump	–	–	–	On, Off	–
T.06 External pump	–	–	–	On, Off	–
T.08 Burner	–	–	–	On, Off	–
Installer level → Test programs → Electronics self-test →					
Self-test	–	–	–	Yes, No	–
Installer level → Appliance config. →					
Language	–	–	–	Deutsch, English, Français, Italiano, Dansk, Nederlands, Castellano, Türkce, Magyar, Русский, Українська, Svenska, Norsk, Polski, Čeština, Hrvatski, Slovenčina, Română, Slovenščina, Português, Srpski	English
Flow temp. setpoint	30	75	°C	1	–
DHW temperature	30	60	°C	1 Product with connected domestic hot water cylinder	–
Auxiliary relay	1	10	–	1 = Circulation pump 2 = External pump 3 = Cylinder charging pump 4 = Extractor hood 5 = External solenoid valve 6 = External fault message 7 = Solar pump (not active) 8 = eBUS remote control (not active) 9 = Legionella protection pump (not active) 10 = Solar valve (not active)	2
Accessory relay 1	1	10	–	1 = Circulation pump 2 = External pump 3 = Cylinder charging pump 4 = Extractor hood 5 = External solenoid valve 6 = External fault message 7 = Solar pump (not active) 8 = eBUS remote control (not active) 9 = Legionella protection pump (not active) 10 = Solar valve (not active)	2

[1]Fault lists are only displayed, and can only be deleted, if faults have occurred.

Setting level	Values		Unit	Increment, select, explanation	Default setting
	Min.	Max.			
Accessory relay 2	1	10	–	1 = Circulation pump 2 = External pump 3 = Cylinder charging pump 4 = Extractor hood 5 = External solenoid valve 6 = External fault message 7 = Solar pump (not active) 8 = eBUS remote control (not active) 9 = Legionella protection pump (not active) 10 = Solar valve (not active)	2
Heating partial load	–	–	kW	Partial load only, full load only, auto	Auto
Contact data	Phone number	–	–	0 – 9	Auto
Default setting	–	–	–	On, Off	–
Installer level → Diagnostics menu →					
D.XXX - D.XXX	Current value		–	–	–
Installer level → Start ins. assistant →					
Language	–	–	–	Deutsch, English, Français, Italiano, Dansk, Nederlands, Castellano, Türkce, Magyar, Русский, Українська, Svenska, Norsk, Polski, Čeština, Hrvatski, Slovenčina, Română, Slovenščina, Português, Srpski	English
Filling mode: 3-way valve is in mid-position	0	2	–	0 = Normal operating mode 1 = Mid-position (parallel operation) 2 = Permanent heating mode position	–
Purge programme	–	–	–	Automatic adaptive purging of the heating circuit and hot water circuit Not active Active	–
Flow temp. setpoint	30	75	°C	1	–
DHW temperature	35	60	°C	1 Product with hot water generation	–
Auxiliary relay	1	10	–	1 = Circulation pump 2 = External pump 3 = Cylinder charging pump 4 = Extractor hood 5 = External solenoid valve 6 = External fault message 7 = Solar pump (not active) 8 = eBUS remote control (not active) 9 = Legionella protection pump (not active) 10 = Solar valve (not active)	2
Accessory relay 1	1	10	–	1 = Circulation pump 2 = External pump 3 = Cylinder charging pump 4 = Extractor hood 5 = External solenoid valve 6 = External fault message 7 = Solar pump (not active) 8 = eBUS remote control (not active) 9 = Legionella protection pump (not active) 10 = Solar valve (not active)	2

[1]Fault lists are only displayed, and can only be deleted, if faults have occurred.

Setting level	Values		Unit	Increment, select, explanation	Default setting
	Min.	Max.			
Accessory relay 2	1	10	–	1 = Circulation pump 2 = External pump 3 = Cylinder charging pump 4 = Extractor hood 5 = External solenoid valve 6 = External fault message 7 = Solar pump (not active) 8 = eBUS remote control (not active) 9 = Legionella protection pump (not active) 10 = Solar valve (not active)	2
Contact data	Phone number		–	0-9	–
End the installation assistant?	–	–	–	Yes, No	–

[1]Fault lists are only displayed, and can only be deleted, if faults have occurred.

C Overview of diagnostics codes

Setting level	Values		Unit	Increment, select, explanation	Default setting	Own setting
	Min.	Max.				
d.00 Heating maximum output	–	–	kW	The maximum heating output varies depending on the product. → Section "Technical data"	→ Section "Technical data"	Adjustable
d.01 Pump overrun in heating mode	1	60	min	1	5	Adjustable
d.02 Burner anti-cycling time in heating mode	2	60	min	1	20	Adjustable
d.04 Water temperature in the cylinder	Current value		°C	–	–	Not adjustable
d.05 Determined heating flow set target temperature	Current value		°C	–	–	Not adjustable
d.07 Set target temperature for the domestic hot water cylinder	Current value		°C	–	–	Not adjustable
d.08 Status of the 230 V thermostat	Current value		–	0 = Room thermostat open (no heat requirement) 1 = Room thermostat closed (heat requirement)	–	Not adjustable
d.09 Heating flow set target temperature that is set on the eBUS room thermostat	Current value		–	–	–	Not adjustable
d.10 Status of the internal pump in the heating circuit	Current value		–	off / on	–	Not adjustable
d.11 Status of the heating circuit's shunt pump	Current value		–	off / on	–	Not adjustable
d.13 Status of the hot water circuit's circulation pump	Current value		–	off / on	–	Not adjustable
d.16 Status of the 24 V room thermostat	Current value		–	off = Heating off on = Heating on	–	Not adjustable
d.17 Heating control	–	–	–	off = Flow temperature on = Return temperature (adjustment for underfloor heating. If you have activated the return temperature control, the automatic heating output determination function is not active.)	0	Adjustable

Setting level	Values		Unit	Increment, select, explanation	Default setting	Own setting
	Min.	Max.				
d.18 Pump overrun operating mode	1	3	–	1 = Comfort (continuously operating pump) 3 = Eco (intermittent pump mode – for the dissipation of the residual heat after hot water generation at an extremely low heat demand)	1	Adjustable
d.20 Maximum hot water set target temperature	50	60	°C	1	50	Adjustable
d.23 Status of the heating demand	Current value		–	off = Heating off (Summer mode) on = Heating on	–	Not adjustable
d.24 Status of the pressure monitor	0	1	–	off = Not switched on = Switched	–	Not adjustable
d.25 Status of the requirement to reheat the cylinder or for the hot water warm start from the eBUS thermostat	Current value		–	off = Function deactivated on = Function activated	–	Not adjustable
d.27 Function of relay 1 (multi-functional module)	1	10	–	1 = Circulation pump 2 = External pump 3 = Cylinder charging pump 4 = Extractor hood 5 = External solenoid valve 6 = External fault message 7 = Solar pump (omitted) 8 = eBUS remote control 9 = Legionella protection pump 10 = Solar valve	1	Adjustable
d.28 Function of relay 2 (multi-functional module)	1	10	–	1 = Circulation pump 2 = External pump 3 = Cylinder charging pump 4 = Extractor hood 5 = External solenoid valve 6 = External fault message 7 = Solar pump (omitted) 8 = eBUS remote control 9 = Legionella protection pump 10 = Solar valve	2	Adjustable
d.31 Automatic filling device	0	2	–	0 = Manual 1 = Semi-automatic 2 = Automatic	0	Adjustable
d.33 Fan speed target value	Current value		rpm	Fan speed = Display value x 100	–	Not adjustable
d.34 Value for the fan speed	Current value		rpm	Fan speed = Display value x 100	–	Not adjustable
d.40 Heating flow temperature	Current value		°C	–	–	Not adjustable
d.41 Heating return temperature	Current value		°C	–	–	Not adjustable
d.43 Heating curve	0.2	4	–	0.1	1.2	Adjustable
d.45 Value for the base point of the heating curve	15	30	–	1	20	Adjustable
d.47 Outside temperature	Current value		°C	–	–	Not adjustable
d.50 Correction of the minimum fan speed	0	3000	rpm	1 Fan speed = Display value x 10	600	Adjustable
d.51 Correction of the maximum fan speed	-2500	0	rpm	1 Fan speed = Display value x 10	-1000	Adjustable

Setting level	Values		Unit	Increment, select, explanation	Default setting	Own setting
	Min.	Max.				
d.58 Solar circuit reheating	0	3	–	0 = Boiler's Legionella protection function deactivated 3 = Hot water activated (target value min. 60 °C)	0	Adjustable
d.60 Number of blocks by the temperature sensor	Current value		–	–	–	Not adjustable
d.61 Number of successful ignitions	Current value		–	–	–	Not adjustable
d.62 Night set-back	0	30	–	1	0	Adjustable
d.64 Average burner ignition time	Current value		s	–	–	Not adjustable
d.65 Maximum burner ignition time	Current value		s	–	–	Not adjustable
d.66 Activation of the warm start function for hot water	–	–	–	off = Function deactivated on = Function activated	1	Adjustable
d.67 Remaining burner anti-cycling time (setting under d.02)	Current value		min	–	–	Not adjustable
d.68 Number of unsuccessful ignitions at 1st attempt	Current value		–	–	–	Not adjustable
d.69 Number of unsuccessful ignitions at 2nd attempt	Current value		–	–	–	Not adjustable
d.71 Maximum heating flow set target temperature	45	80	°C	1	75	Adjustable
d.75 Maximum cylinder reheating time	20	90	min	1	45	Adjustable
d.77 Max. cylinder reheating	–	–	kW	1 → Section "Technical data"	–	Adjustable
d.78 DHW max. flow temperature	50	80	°C	1	–	Adjustable
d.80 Running time in heating mode	Current value		h	–	–	Not adjustable
d.81 Running time in DHW mode	Current value		h	–	–	Not adjustable
d.82 Number of burner ignitions in heating mode	Current value		–	Number of ignitions = Display value x 100	–	Not adjustable
d.83 Number of burner ignitions in DHW mode	Current value		–	Number of ignitions = Display value x 100	–	Not adjustable
d.84 Maintenance in	0	3000	h	Number of hours = Display value x 10	300	Not adjustable
d.85 Increase in the min. output (heating and DHW mode)	–	–	kW	1 → Section "Technical data"	–	Adjustable
d.90 Status of the eBUS room thermostat	Current value		–	off = Not connected on = Connected	–	Not adjustable
d.93 Setting the product code	0	99	–	1	–	Adjustable
d.94 Delete fault list	0	1	–	off = No on = Yes	–	Adjustable
d.95 Software versions	–	–	–	1 = Main PCB 2 = Interface PCB	–	Adjustable
d.96 Reset to factory setting	–	–	–	0 = No 1 = Yes	–	Adjustable
d.128 Heating minimum target value	10	75	°C	1	10	Adjustable

Setting level	Values		Unit	Increment, select, explanation	Default setting	Own setting
	Min.	Max.				
d.129 Hot water minimum target value	35 (combination unit) 45 (pure boiler)	60	°C	1	35	Adjustable

D Status codes – Overview

Status code	Meaning
	Displays in heating mode
S. 0	Heating mode: No requirement
S.01	Heating mode: Advance fan operation
S.02	Heating mode: Pump pre-run
S.03	Heating mode: Burner ignition
S.04	Heating mode: Burner on
S.05	Heating mode: Pump/fan overrun
S.06	Heating mode: Fan overrun
S.07	Heating mode: Pump overrun
S.08	Heating mode: Temporary shutdown after heating procedure
	Display in hot water handling mode with cylinder
S.20	Hot water handling mode: Requirement
S.21	Hot water handling mode: Advance fan operation
S.22	Hot water handling mode: Pump pre-run
S.23	Hot water handling mode: Burner ignition
S.24	DHW mode: Burner on
S.25	DHW mode: Pump/fan overrun
S.26	DHW mode: Fan overrun
S.27	DHW mode: Pump overrun
S.28	Hot water handling mode: Temporary shutdown of the burner
	Other displays
S.30	Room thermostat is blocking heating mode.
S.31	No heating demand: Summer mode, eBUS controller, waiting period
S.32	Fan waiting time: Fan speed outside of the tolerance values
S.34	Frost protection active
S.39	Underfloor heating contact open
S.42	Flue non-return flap closed
S.46	Frost protection mode (Comfort): Minimum load
S.53	Product in waiting period/operation block function due to low water pressure (flow/return spread too large)
S.54	Waiting period: Low water pressure in the circuit (flow/return spread too large)
S.88	Product purging active
S.91	Maintenance: Demo mode
S.96	Automatic test programme: Return temperature sensor, heating demands blocked.
S.98	Automatic test programme: Return temperature sensor, heating demands blocked.
S.99	Internal automatic test programmes
S.108	Purging the combustion chamber, fan in operation
S.109	Product's standby mode activated

E Overview of fault codes

Code	Meaning	Cause
F.00	Flow temperature sensor interruption	NTC plug not plugged in or has come loose, multiple plug on the PCB not plugged in correctly, interruption in cable harness, NTC defective
F.01	Return temperature sensor interruption	NTC plug not plugged in or has come loose, multiple plug on the PCB not plugged in correctly, interruption in cable harness, NTC defective
F.10	Flow NTC short circuit	NTC defective, short circuit in cable harness, cable/casing
F.11	Return NTC short circuit	NTC defective, short circuit in cable harness, cable/casing
F.13	Warm start sensor/cylinder sensor short circuit	NTC defective, short circuit in cable harness, cable/casing
F.22	Safety switch-off: Low water pressure	No or insufficient water in the product, water pressure sensor defective, cable to pump or water pressure sensor loose/not connected/defective
F.23	Safety switch-off: Temperature difference too great	Pump blocked, insufficient pump output, air in product, flow and return NTC connected the wrong way round
F.24	Safety switch-off: Temperature rise too fast	Pump blocked, insufficient pump output, air in product, system pressure too low, non-return valve blocked/incorrectly installed
F.25	Safety switch-off: Flue gas temperature too high	Break in plug connection for optional flue gas safety temperature limiter (STB), break in cable harness
F.27	Safety switch-off: Flame simulation	Moisture on the electronics, electronics (flame monitor) defective, gas solenoid valve leaking
F.28	Failure during start-up: Ignition unsuccessful	Gas meter defective or gas pressure monitor has triggered, air in gas, gas flow pressure too low, thermal isolator device (TAE) has triggered, condensate duct blocked, incorrect gas restrictor, incorrect spare part gas valve, fault on the gas valve, multiple plug on PCB incorrectly plugged in, break in cable harness, ignition system (ignition transformer, ignition cable, ignition plug, ignition electrode) defective, ionisation current interrupted (cable, electrode), incorrect earthing of product, electronics defective
F.29	Failure during operation: Re-ignition unsuccessful	Gas supply temporarily stopped, flue gas recirculation, condensate duct blocked, defective earthing of product, ignition transformer has spark failure
F.32	Fan fault	Plug on fan not correctly plugged in, multiple plug on PCB not correctly plugged in, break in cable harness, fan blocked, Hall sensor defective, electronics defective
F.49	Fault: eBUS	Short circuit on eBUS, eBUS overload or two power supplies with different polarities on the eBUS
F.61	Fault: Gas valve regulation	– Short circuit/short to earth in cable harness for the gas valve – Gas valve defective (coils shorted to earth) – Electronics defective
F.62	Fault: Gas valve switch-off delay	– Delayed shutdown of gas valve – Delayed extinguishing of flame signal – Gas valve leaking – Electronics defective
F.63	Fault: EEPROM	Electronics defective
F.64	Fault: Electronics/NTC	Flow or return NTC short circuited, electronics defective
F.65	Fault: Electronics temp.	Electronics overheating due to external influences, electronics defective
F.67	Fault: Electronics/flame	Implausible flame signal, electronics defective
F.68	Fault: Unstable flame signal	Air in gas, gas flow pressure too low, incorrect air ratio, condensate duct blocked, incorrect gas restrictor, ionisation flow interruption (cable, electrode), flue gas recirculation, condensate duct
F.70	Invalid device specific number (DSN)	If spare parts fitted: Display and PCB replaced at same time and DSN not reset, incorrect or missing output range coding resistance
F.71	Flow NTC fault	Flow temperature sensor signalling constant value: – Flow temperature sensor incorrectly positioned at supply pipe – Flow temperature sensor defective
F.72	Flow/return NTC fault	Flow/return NTC temperature difference too great → flow and/or return temperature sensor defective

Code	Meaning	Cause
F.73	Water pressure sensor signal in the wrong range (too low)	Interruption/short circuit of water pressure sensor, interruption/short circuit to GND in supply line to water pressure sensor or water pressure sensor defective
F.74	Water pressure sensor signal outside correct range (too high)	Line to water pressure sensor has a short circuit to 5 V/24 V or internal fault in the water pressure sensor
F.75	Fault: No pressure change detection when starting pump	Water pressure sensor and/or pump defective, air in the heating installation, insufficient water in the product; check adjustable bypass, connect external expansion vessel to the return
F.76	Overheating protection on primary heat exchanger has responded	Cable or cable connections for safety fuse in primary heat exchanger or primary heat exchanger defective
F.77	Fault: Flue non-return flap/condensate pump	No response from flue non-return flap or condensate pump defective
F.83	Fault: Flow and/or return temperature sensor temperature change	When the burner starts, the temperature change registered at the flow and/or return temperature sensor is non-existent or too small. – Insufficient water in product – Flow or return temperature sensor not in correct position at pipe
F.85	Fault: Flow and return temperature sensors incorrectly installed	The flow and/or return temperature sensors have been installed on the same pipe/incorrect pipe
F.87	Ignition transformer not connected	Ignition transformer plug not plugged in or has come loose, multiple plug on the PCB not plugged in correctly, interruption in cable harness, electronics defective
F.88	Gas valve not connected	Gas valve plug not plugged in or has come loose, multiple plug on the PCB not plugged in correctly, interruption in cable harness, electronics defective
F.89	Incorrect pump detected	Unsuitable pump connected, PWM plug not plugged in or has come loose, multiple plug on the PCB not plugged in correctly, interruption in cable harness, electronics defective
con	No communication with the PCB	Communication fault between display and PCB in the electronics box

F Connection diagram

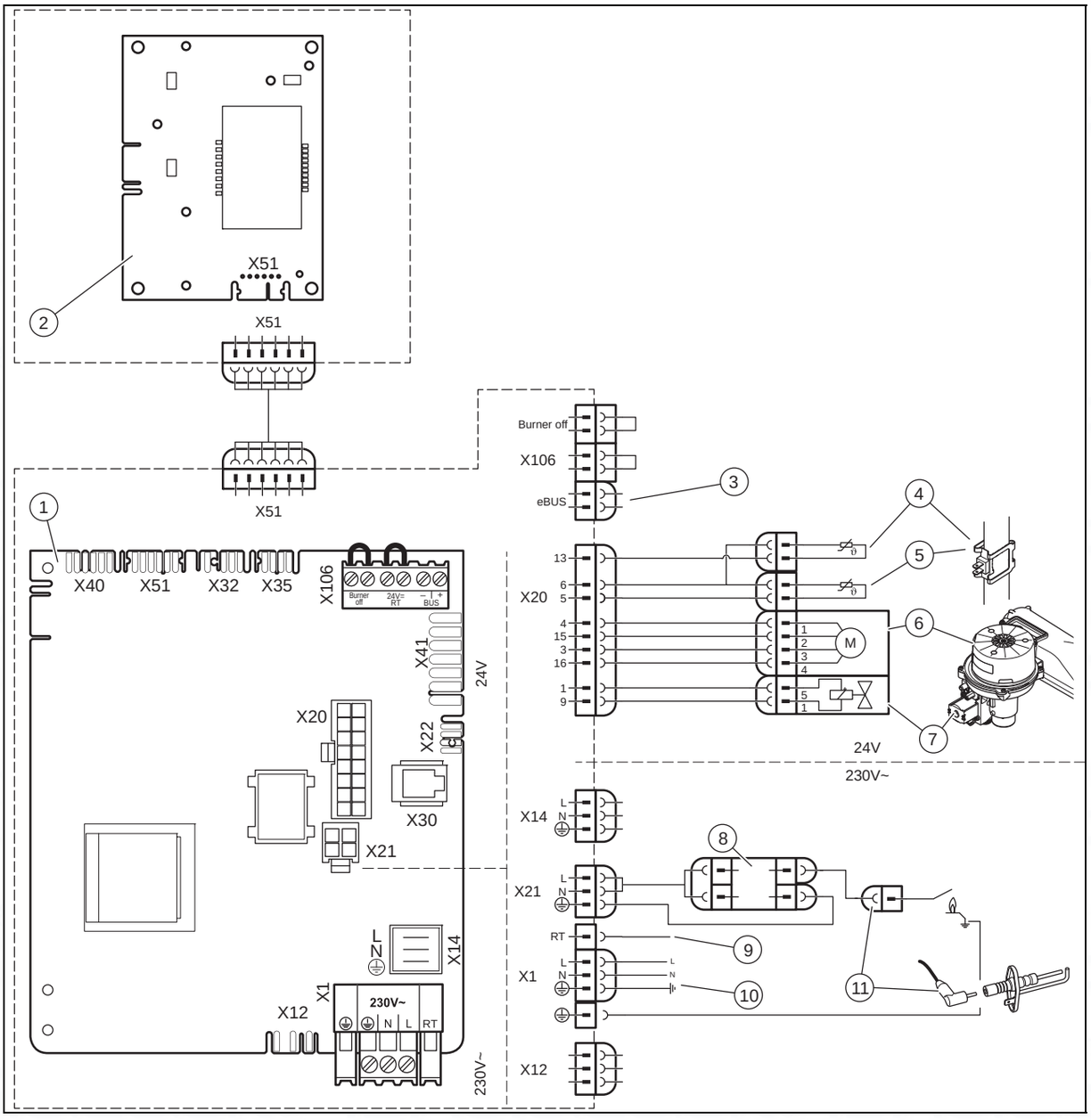

1	Main PCB	7	Gas valve
2	Interface PCB	8	Monitoring electrode
3	Control system	9	Room thermostat
4	Temperature sensor in the heating flow	10	Main power supply
5	Temperature sensor in the heating return	11	Ignition electrode
6	Fan		

G Connection diagram, 30 kW

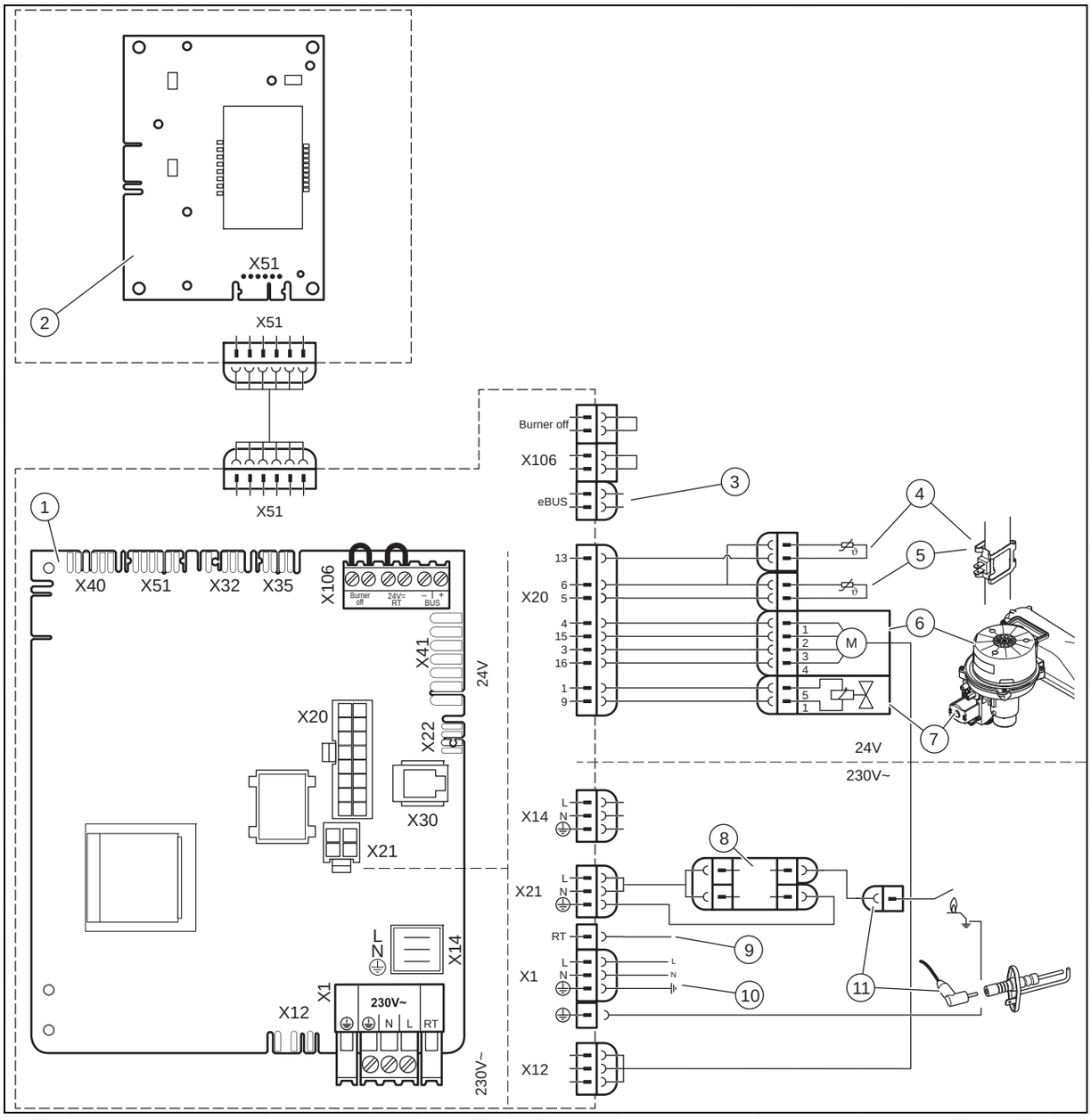

1	Main PCB	7	Gas valve
2	Interface PCB	8	Monitoring electrode
3	Control system	9	Room thermostat
4	Temperature sensor in the heating flow	10	Main power supply
5	Temperature sensor in the heating return	11	Ignition electrode
6	Fan		

H Opening in the flue pipe

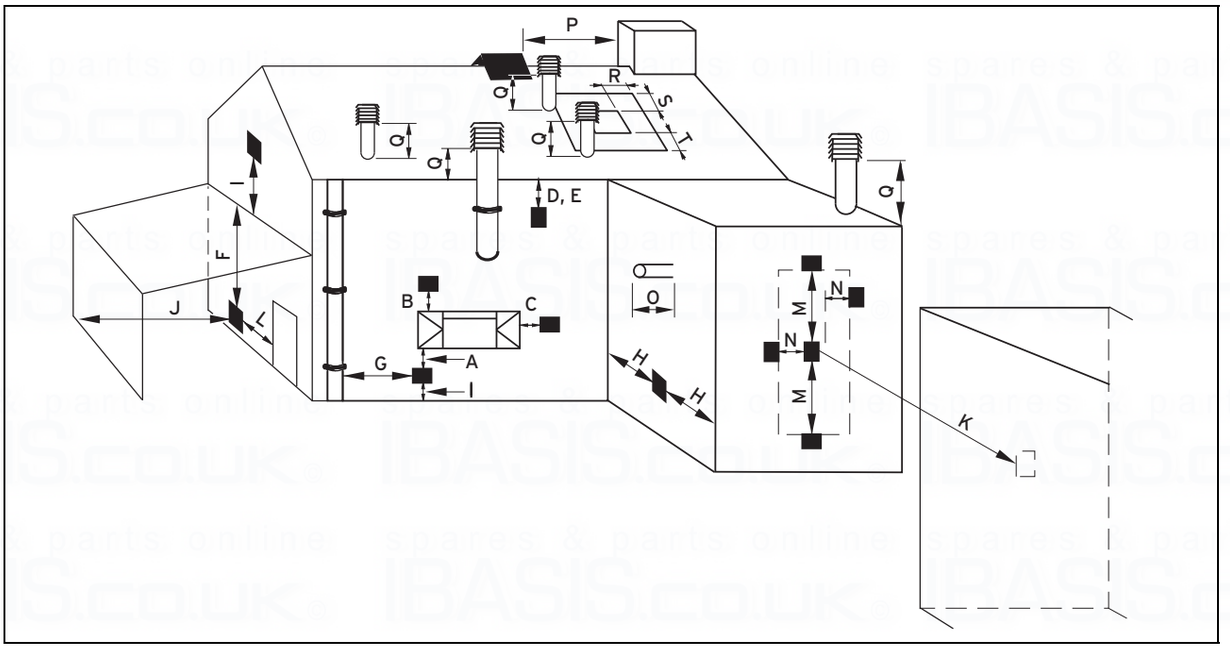

H.1 Positioning of the opening of a fan-supported flue gas pipe

	Installation site	Minimum dimensions
A	Directly below an opening, air bricks, opening windows, etc., that can be opened.	300 mm
B	Above an opening, air bricks, opening windows, etc., that can be opened.	300 mm
C	Horizontally to an opening, air bricks, opening windows, etc., that can be opened.	300 mm
D	Below temperature-sensitive building components, e.g. plastic gutters, down pipes or wastewater pipes	75 mm
E	Below eaves	200 mm
F	Below balconies or car port roofs	200 mm
G	From vertical wastewater pipes or down pipes	150 mm
H	From external or internal corners	200 mm
I	Above floors, roofs or balconies	300 mm
J	From a surface facing a terminal	600 mm
K	From a terminal facing a terminal	1,200 mm
L	From an opening in the car port (e.g. door, window) which leads into the dwelling	1,200 mm
M	Vertical from a terminal on the same wall	1,500 mm
N	Horizontal from a terminal on the same wall	300 mm
O	From the wall on which the terminal has been installed	0 mm
P	From a vertical structure on the roof	N/A
Q	Above the roof area	300 mm
R	Horizontal from adjacent windows on pitched or flat roofs	600 mm
S	Above adjacent windows on pitched or flat roofs	600 mm
T	Below adjacent windows on pitched or flat roofs	2,000 mm

H.2 Text from BS 5440-1 on fan-supported flue gas pipes

BS 5440–1: It is recommended that the fanned flue gas system terminal is positioned as follows:

- At least 2 m from an opening in the building directly opposite, and
- So that the combustion products are not discharged directly across a property boundary.
- Dimensions D, E, F and G: These clearances may be reduced to 25 mm without affecting the performance of the boiler. In order to ensure that the condensate vapour plume does not damage adjacent surfaces, the terminal should be extended as shown.
- Dimension H: This clearance may be reduced to 25 mm without adversely affecting the performance of the boiler. However, in order to ensure that the condensate vapour plume does not damage adjacent surfaces, a clearance of 300 mm is preferred. For IE, recommendations are given in the current issue of the IS 813.

H.3 Opening of the flue pipe below eaves and balconies

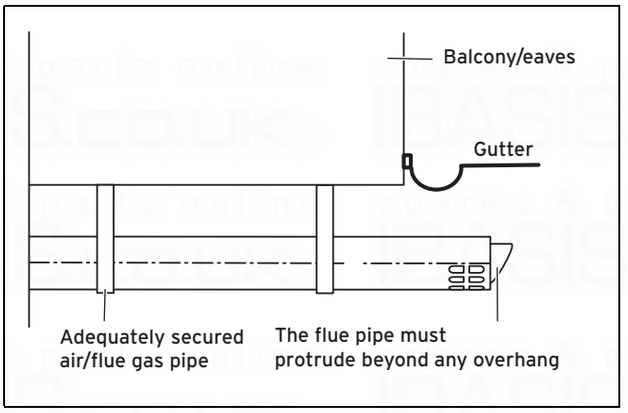

I Commissioning Checklist

Benchmark Commissioning and Servicing Section

It is a requirement that the boiler is installed and commissioned to the manufacturers instructions and the data fields on the commissioning checklist completed in full.

To instigate the boiler guarantee the boiler needs to be registered with the manufacturer within one month of the installation.

To maintain the boiler guarantee it is essential that the boiler is serviced annually by a Gas Safe registered engineer who has been trained on the boiler installed. The service details should be recorded on the Benchmark Service Interval Record and left with the householder.

benchmark
COLLECTIVE MARK
THE MARK OF QUALITY FOR THE INSTALLATION, COMMISSIONING AND SERVICING OF DOMESTIC HEATING AND HOT WATER SYSTEMS

www.centralheating.co.uk

© Heating and Hotwater Industry Council (HHIC)

GAS BOILER SYSTEM COMMISSIONING CHECKLIST

This Commissioning Checklist is to be completed in full by the competent person who commissioned the boiler as a means of demonstrating compliance with the appropriate Building Regulations and then handed to the customer to keep for future reference.

Failure to install and commission according to the manufacturer's instructions and complete this Benchmark Commissioning Checklist will invalidate the warranty. This does not affect the customer's statutory rights.

Customer name:	Telephone number:
Address:	
Boiler make and model:	
Boiler serial number:	
Commissioned by (PRINT NAME):	Gas Safe register number:
Company name:	Telephone number:
Company address:	
	Commissioning date:
To be completed by the customer on receipt of a Building Regulations Compliance Certificate*	
Building Regulations Notification Number (if applicable):	

CONTROLS (tick the appropriate boxes)				
Time and temperature control to heating	Room thermostat and programmer/timer		Programmable room thermostat	
	Load/weather compensation		Optimum start control	
Time and temperature control to hot water	Cylinder thermostat and programmer/timer		Combination Boiler	
Heating zone valves	Fitted		Not required	
Hot water zone valves	Fitted		Not required	
Thermostatic radiator valves	Fitted		Not required	
Automatic bypass to system	Fitted		Not required	
Boiler interlock			Provided	

ALL SYSTEMS				
The system has been flushed and cleaned in accordance with BS7593 and boiler manufacturer's instructions			Yes	
What system cleaner was used?				
What inhibitor was used?		Quantity		litres
Has a primary water system filter been installed?	Yes		No	

CENTRAL HEATING MODE measure and record:			
Gas rate	m³/hr	**OR**	ft³/hr
Burner operating pressure (if applicable)	mbar	**OR** Gas inlet pressure	mbar
Central heating flow temperature			°C
Central heating return temperature			°C

COMBINATION BOILERS ONLY				
Is the installation in a hard water area (above 200ppm)?	Yes		No	
If yes, and if required by the manufacturer, has a water scale reducer been fitted?	Yes		No	
What type of scale reducer has been fitted?				
DOMESTIC HOT WATER MODE Measure and Record:				
Gas rate	m³/hr	**OR**	ft³/hr	
Burner operating pressure (at maximum rate)	mbar	**OR** Gas inlet pressure at maximum rate	mbar	
Cold water inlet temperature			°C	
Hot water has been checked at all outlets	Yes		Temperature	°C
Water flow rate			l/min	

CONDENSING BOILERS ONLY		
The condensate drain has been installed in accordance with the manufacturer's instructions and/or BS5546/BS6798	Yes	

ALL INSTALLATIONS							
Record the following:	At max. rate:	CO	ppm	**AND**	CO/CO_2	Ratio	
	At min. rate: (where possible)	CO	ppm	**AND**	CO/CO_2	Ratio	
The heating and hot water system complies with the appropriate Building Regulations						Yes	
The boiler and associated products have been installed and commissioned in accordance with the manufacturer's instructions						Yes	
The operation of the boiler and system controls have been demonstrated to and understood by the customer						Yes	
The manufacturer's literature, including Benchmark Checklist and Service Record, has been explained and left with the customer						Yes	

Commissioning Engineer's Signature
Customer's Signature
(To confirm satisfactory demonstration and receipt of manufacturer's literature)

*All installations in England and Wales must be notified to Local Authority Building Control (LABC) either directly or through a Competent Persons Scheme. A Building Regulations Compliance Certificate will then be issued to the customer.

benchmark COLLECTIVE MARK
THE MARK OF QUALITY FOR THE INSTALLATION, COMMISSIONING AND SERVICING OF DOMESTIC HEATING AND HOT WATER SYSTEMS

© Heating and Hotwater Industry Council (HHIC)

www.centralheating.co.uk

SERVICE RECORD

It is recommended that your heating system is serviced regularly and that the appropriate Service Interval Record is completed.

Service Provider

Before completing the appropriate Service Record below, please ensure you have carried out the service as described in the manufacturer's instructions. Always use the manufacturer's specified spare part when replacing controls.

SERVICE 01					Date:
Engineer name:					
Company name:					
Telephone No:					
Gas safe register No:					
Record:	At max. rate:	CO	ppm	**AND**	CO_2 %
	At min. rate: (Where Possible)	CO	ppm	**AND**	CO_2 %
Comments:					
Signature					

SERVICE 02					Date:
Engineer name:					
Company name:					
Telephone No:					
Gas safe register No:					
Record:	At max. rate:	CO	ppm	**AND**	CO_2 %
	At min. rate: (Where Possible)	CO	ppm	**AND**	CO_2 %
Comments:					
Signature					

SERVICE 03					Date:
Engineer name:					
Company name:					
Telephone No:					
Gas safe register No:					
Record:	At max. rate:	CO	ppm	**AND**	CO_2 %
	At min. rate: (Where Possible)	CO	ppm	**AND**	CO_2 %
Comments:					
Signature					

SERVICE 04					Date:
Engineer name:					
Company name:					
Telephone No:					
Gas safe register No:					
Record:	At max. rate:	CO	ppm	**AND**	CO_2 %
	At min. rate: (Where Possible)	CO	ppm	**AND**	CO_2 %
Comments:					
Signature					

SERVICE 05					Date:
Engineer name:					
Company name:					
Telephone No:					
Gas safe register No:					
Record:	At max. rate:	CO	ppm	**AND**	CO_2 %
	At min. rate: (Where Possible)	CO	ppm	**AND**	CO_2 %
Comments:					
Signature					

SERVICE 06					Date:
Engineer name:					
Company name:					
Telephone No:					
Gas safe register No:					
Record:	At max. rate:	CO	ppm	**AND**	CO_2 %
	At min. rate: (Where Possible)	CO	ppm	**AND**	CO_2 %
Comments:					
Signature					

SERVICE 07					Date:
Engineer name:					
Company name:					
Telephone No:					
Gas safe register No:					
Record:	At max. rate:	CO	ppm	**AND**	CO_2 %
	At min. rate: (Where Possible)	CO	ppm	**AND**	CO_2 %
Comments:					
Signature					

SERVICE 08					Date:
Engineer name:					
Company name:					
Telephone No:					
Gas safe register No:					
Record:	At max. rate:	CO	ppm	**AND**	CO_2 %
	At min. rate: (Where Possible)	CO	ppm	**AND**	CO_2 %
Comments:					
Signature					

SERVICE 09					Date:
Engineer name:					
Company name:					
Telephone No:					
Gas safe register No:					
Record:	At max. rate:	CO	ppm	**AND**	CO_2 %
	At min. rate: (Where Possible)	CO	ppm	**AND**	CO_2 %
Comments:					
Signature					

SERVICE 10					Date:
Engineer name:					
Company name:					
Telephone No:					
Gas safe register No:					
Record:	At max. rate:	CO	ppm	**AND**	CO_2 %
	At min. rate: (Where Possible)	CO	ppm	**AND**	CO_2 %
Comments:					
Signature					

*All installations in England and Wales must be notified to Local Authority Building Control (LABC) either directly or through a Competent Persons Scheme. A Building Regulations Compliance Certificate will then be issued to the customer.

benchmark COLLECTIVE MARK
THE MARK OF QUALITY FOR THE INSTALLATION, COMMISSIONING AND SERVICING OF DOMESTIC HEATING AND HOT WATER SYSTEMS

© Heating and Hotwater Industry Council (HHIC)

www.centralheating.co.uk

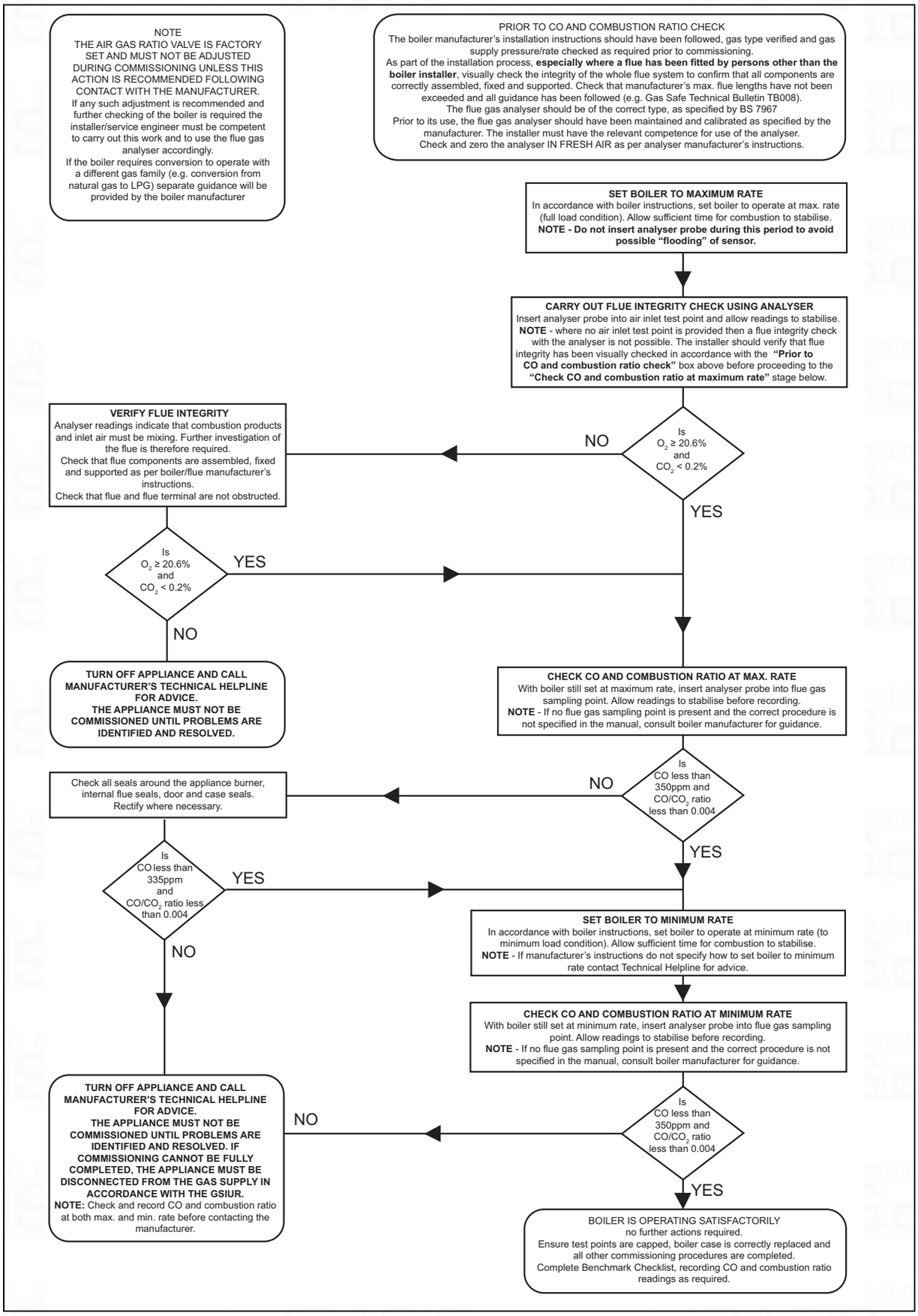
NOTE
THE AIR GAS RATIO VALVE IS FACTORY SET AND MUST NOT BE ADJUSTED DURING COMMISSIONING UNLESS THIS ACTION IS RECOMMENDED FOLLOWING CONTACT WITH THE MANUFACTURER.
If any such adjustment is recommended and further checking of the boiler is required the installer/service engineer must be competent to carry out this work and to use the flue gas analyser accordingly.
If the boiler requires conversion to operate with a different gas family (e.g. conversion from natural gas to LPG) separate guidance will be provided by the boiler manufacturer
PRIOR TO CO AND COMBUSTION RATIO CHECK
The boiler manufacturer's installation instructions should have been followed, gas type verified and gas supply pressure/rate checked as required prior to commissioning.
As part of the installation process, **especially where a flue has been fitted by persons other than the boiler installer**, visually check the integrity of the whole flue system to confirm that all components are correctly assembled, fixed and supported. Check that manufacturer's max. flue lengths have not been exceeded and all guidance has been followed (e.g. Gas Safe Technical Bulletin TB008).
The flue gas analyser should be of the correct type, as specified by BS 7967
Prior to its use, the flue gas analyser should have been maintained and calibrated as specified by the manufacturer. The installer must have the relevant competence for use of the analyser.
Check and zero the analyser IN FRESH AIR as per analyser manufacturer's instructions.
SET BOILER TO MAXIMUM RATE
In accordance with boiler instructions, set boiler to operate at max. rate (full load condition). Allow sufficient time for combustion to stabilise.
NOTE - Do not insert analyser probe during this period to avoid possible "flooding" of sensor.
CARRY OUT FLUE INTEGRITY CHECK USING ANALYSER
Insert analyser probe into air inlet test point and allow readings to stabilise.
NOTE - where no air inlet test point is provided then a flue integrity check with the analyser is not possible. The installer should verify that flue integrity has been visually checked in accordance with the **"Prior to CO and combustion ratio check"** box above before proceeding to the **"Check CO and combustion ratio at maximum rate"** stage below.
Is $O_2 \geq 20.6\%$ and $CO_2 < 0.2\%$
NO
YES
VERIFY FLUE INTEGRITY
Analyser readings indicate that combustion products and inlet air must be mixing. Further investigation of the flue is therefore required.
Check that flue components are assembled, fixed and supported as per boiler/flue manufacturer's instructions.
Check that flue and flue terminal are not obstructed.
Is $O_2 \geq 20.6\%$ and $CO_2 < 0.2\%$
YES
NO
TURN OFF APPLIANCE AND CALL MANUFACTURER'S TECHNICAL HELPLINE FOR ADVICE.
THE APPLIANCE MUST NOT BE COMMISSIONED UNTIL PROBLEMS ARE IDENTIFIED AND RESOLVED.
CHECK CO AND COMBUSTION RATIO AT MAX. RATE
With boiler still set at maximum rate, insert analyser probe into flue gas sampling point. Allow readings to stabilise before recording.
NOTE - If no flue gas sampling point is present and the correct procedure is not specified in the manual, consult boiler manufacturer for guidance.
Is CO less than 350ppm and CO/CO_2 ratio less than 0.004
NO
YES
Check all seals around the appliance burner, internal flue seals, door and case seals. Rectify where necessary.
Is CO less than 335ppm and CO/CO_2 ratio less than 0.004
YES
NO
SET BOILER TO MINIMUM RATE
In accordance with boiler instructions, set boiler to operate at minimum rate (to minimum load condition). Allow sufficient time for combustion to stabilise.
NOTE - If manufacturer's instructions do not specify how to set boiler to minimum rate contact Technical Helpline for advice.
CHECK CO AND COMBUSTION RATIO AT MINIMUM RATE
With boiler still set at minimum rate, insert analyser probe into flue gas sampling point. Allow readings to stabilise before recording.
NOTE - If no flue gas sampling point is present and the correct procedure is not specified in the manual, consult boiler manufacturer for guidance.
Is CO less than 350ppm and CO/CO_2 ratio less than 0.004
NO
YES
TURN OFF APPLIANCE AND CALL MANUFACTURER'S TECHNICAL HELPLINE FOR ADVICE.
THE APPLIANCE MUST NOT BE COMMISSIONED UNTIL PROBLEMS ARE IDENTIFIED AND RESOLVED. IF COMMISSIONING CANNOT BE FULLY COMPLETED, THE APPLIANCE MUST BE DISCONNECTED FROM THE GAS SUPPLY IN ACCORDANCE WITH THE GSIUR.
NOTE: Check and record CO and combustion ratio at both max. and min. rate before contacting the manufacturer.
BOILER IS OPERATING SATISFACTORILY
no further actions required.
Ensure test points are capped, boiler case is correctly replaced and all other commissioning procedures are completed.
Complete Benchmark Checklist, recording CO and combustion ratio readings as required.

J Technical data

Technical data – Heating

	VU 126/6-5 OV (H-GB) ecoTEC plus	VU 156/6-5 OV (H-GB) ecoTEC plus	VU 186/6-5 OV (H-GB) ecoTEC plus	VU 246/6-5 OV (H-GB) ecoTEC plus
Max. flow temperature adjustment range (default setting: 75 °C)	10 … 80 °C	10 … 80 °C	10 … 80 °C	10 … 80 °C
Maximum permissible pressure	0.3 MPa (3.0 bar)	0.3 MPa (3.0 bar)	0.3 MPa (3.0 bar)	0.3 MPa (3.0 bar)
Nominal water flow (ΔT = 20 K)	530 l/h	655 l/h	788 l/h	1,059 l/h
Nominal water flow (ΔT = 30 K)	353 l/h	436 l/h	525 l/h	706 l/h
Approximate value for the condensate volume (pH value between 3.5 and 4.0) at 50/30 °C	1.23 l/h	1.53 l/h	1.84 l/h	2.47 l/h

	VU 306/6-5 OV (H-GB) ecoTEC plus
Max. flow temperature adjustment range (default setting: 75 °C)	10 … 80 °C
Maximum permissible pressure	0.3 MPa (3.0 bar)
Nominal water flow (ΔT = 20 K)	1,313 l/h
Nominal water flow (ΔT = 30 K)	876 l/h
Approximate value for the condensate volume (pH value between 3.5 and 4.0) at 50/30 °C	3.06 l/h

Technical data – G20 power/loading G20

	VU 126/6-5 OV (H-GB) ecoTEC plus	VU 156/6-5 OV (H-GB) ecoTEC plus	VU 186/6-5 OV (H-GB) ecoTEC plus	VU 246/6-5 OV (H-GB) ecoTEC plus
Maximum heat output	12 kW	15 kW	18 kW	24 kW
Effective output range (P) at 40/30 °C	4.8 … 13.0 kW	4.8 … 16.2 kW	5.3 … 19.5 kW	6.5 … 26.2 kW
Effective output range (P) at 50/30 °C	4.7 … 12.8 kW	4.7 … 15.9 kW	5.2 … 19.1 kW	6.3 … 25.7 kW
Effective output range (P) at 80/60 °C	4.5 … 12.3 kW	4.5 … 15.2 kW	5.0 … 18.3 kW	6.1 … 24.6 kW
Domestic hot water heat output (P)	4.4 … 18.0 kW	4.4 … 18.0 kW	5.0 … 25.2 kW	6.0 … 30.0 kW
Maximum heat input – heating (Q max.)	12.3 kW	15.3 kW	18.4 kW	24.7 kW
Minimum heat input – heating (Q min.)	5.0 kW	4.5 kW	5.0 kW	6.1 kW
Maximum heat input – hot water (Q max.)	18.4 kW	18.4 kW	25.7 kW	30.6 kW
Minimum heat input – hot water (Q min.)	4.5 kW	4.5 kW	5.1 kW	6.1 kW

	VU 306/6-5 OV (H-GB) ecoTEC plus
Maximum heat output	30 kW
Effective output range (P) at 40/30 °C	7.6 … 32.4 kW
Effective output range (P) at 50/30 °C	7.5 … 31.8 kW
Effective output range (P) at 80/60 °C	7.2 … 30.5 kW
Domestic hot water heat output (P)	7.1 … 35.0 kW

	VU 306/6-5 OV (H-GB) ecoTEC plus
Maximum heat input – heating (Q max.)	30.6 kW
Minimum heat input – heating (Q min.)	7.2 kW
Maximum heat input – hot water (Q max.)	35.7 kW
Minimum heat input – hot water (Q min.)	7.2 kW

Technical data – General

	VU 126/6-5 OV (H-GB) ecoTEC plus	VU 156/6-5 OV (H-GB) ecoTEC plus	VU 186/6-5 OV (H-GB) ecoTEC plus	VU 246/6-5 OV (H-GB) ecoTEC plus
Gas category	I_{2H}	I_{2H}	I_{2H}	I_{2H}
Diameter of the gas pipe	1/2 inch	1/2 inch	1/2 inch	1/2 inch
Diameter of the heating connections	3/4 inch	3/4 inch	3/4 inch	3/4 inch
Expansion relief valve connector (min.)	15 mm	15 mm	15 mm	15 mm
Condensate drain pipework (min.)	21.5 mm	21.5 mm	21.5 mm	21.5 mm
G20 gas supply pressure	2.0 kPa	2.0 kPa	2.0 kPa	2.0 kPa
Gas flow at P max. – hot water (G20)	1.9 m³/h	1.9 m³/h	2.7 m³/h	3.2 m³/h
Gas flow at P max. – heating mode (G20)	1.3 m³/h	1.6 m³/h	1.9 m³/h	2.6 m³/h
Gas flow at P min. (G20)	0.480 m³/h	0.480 m³/h	0.533 m³/h	0.646 m³/h
CE number (PIN)	CE-0063CP3646	CE-0063CP3646	CE-0063CP3646	CE-0063CP3646
Flue gas mass rate in heating mode at P min.	2.08 g/s	2.08 g/s	2.31 g/s	2.80 g/s
Flue gas mass rate in heating mode at P max.	5.5 g/s	6.9 g/s	8.3 g/s	11.1 g/s
Flue gas mass rate in hot water handling mode at P max.	8.3 g/s	8.3 g/s	11.6 g/s	13.8 g/s
Flue gas temperature (80 °C/60 °C) at P max.	55 °C	55 °C	60 °C	77 °C
Flue gas temperature (80 °C/60 °C) at P min.	55 °C	55 °C	55 °C	55 °C
Flue gas temperature (50 °C/30 °C) at P max.	43 °C	48 °C	51 °C	60 °C
Flue gas temperature (50 °C/30 °C) at P min.	32 °C	32 °C	34 °C	35 °C
Flue gas temperature in hot water handling mode	71 °C	71 °C	69 °C	68 °C
Flue gas temperature when overheating	105 °C	105 °C	105 °C	95 °C
Released system types	C13, C33, C43, C53	C13, C33, C43, C53	C13, C33, C43, C53	C13, C33, C43, C53
Nominal efficiency at 80/60 °C	99.6 %	99.6 %	99.6 %	99.6 %
Nominal efficiency at 50/30 °C	104.0 %	104.0 %	104.0 %	104.0 %
Nominal efficiency at 40/30 °C	106.0 %	106.0 %	106.0 %	106.0 %
Nominal efficiency in partial load operation (30%) at 40/30 °C	108.5 %	108.5 %	108.5 %	108.5 %
NOx class	5	5	5	5
Product dimensions, width	375 mm	375 mm	375 mm	375 mm
Product dimensions, depth	280 mm	280 mm	280 mm	280 mm
Product dimensions, height	600 mm	600 mm	600 mm	600 mm

	VU 126/6-5 OV (H-GB) ecoTEC plus	VU 156/6-5 OV (H-GB) ecoTEC plus	VU 186/6-5 OV (H-GB) ecoTEC plus	VU 246/6-5 OV (H-GB) ecoTEC plus
Net weight	23 kg	23 kg	23 kg	23 kg
Weight when filled with water	27 kg	27 kg	27 kg	28 kg

	VU 306/6-5 OV (H-GB) ecoTEC plus
Gas category	I_{2H}
Diameter of the gas pipe	1/2 inch
Diameter of the heating connections	3/4 inch
Expansion relief valve connector (min.)	15 mm
Condensate drain pipework (min.)	21.5 mm
G20 gas supply pressure	2.0 kPa
Gas flow at P max. – hot water (G20)	3.8 m³/h
Gas flow at P max. – heating mode (G20)	3.2 m³/h
Gas flow at P min. (G20)	0.762 m³/h
CE number (PIN)	CE-0063CP3646
Flue gas mass rate in heating mode at P min.	3.30 g/s
Flue gas mass rate in heating mode at P max.	13.8 g/s
Flue gas mass rate in hot water handling mode at P max.	16.1 g/s
Flue gas temperature (80 °C/60 °C) at P max.	86 °C
Flue gas temperature (80 °C/60 °C) at P min.	56 °C
Flue gas temperature (50 °C/30 °C) at P max.	60 °C
Flue gas temperature (50 °C/30 °C) at P min.	37 °C
Flue gas temperature in hot water handling mode	75 °C
Flue gas temperature when overheating	104 °C
Released system types	C13, C33, C43, C53
Nominal efficiency at 80/60 °C	99.6 %
Nominal efficiency at 50/30 °C	104.0 %
Nominal efficiency at 40/30 °C	106.0 %
Nominal efficiency in partial load operation (30%) at 40/30 °C	108.5 %
NOx class	5
Product dimensions, width	375 mm
Product dimensions, depth	280 mm
Product dimensions, height	600 mm
Net weight	23 kg
Weight when filled with water	28 kg

Technical data – Electrics

	VU 126/6-5 OV (H-GB) ecoTEC plus	VU 156/6-5 OV (H-GB) ecoTEC plus	VU 186/6-5 OV (H-GB) ecoTEC plus	VU 246/6-5 OV (H-GB) ecoTEC plus
Electric connection	230 V / 50 Hz	230 V / 50 Hz	230 V / 50 Hz	230 V / 50 Hz
Built-in fuse (slow-blow)	T2/2A, 250V	T2/2A, 250V	T2/2A, 250V	T2/2A, 250V
Max. electrical power consumption	65 W	65 W	66 W	75 W
Standby electrical power consumption	2 W	2 W	2 W	2 W
Level of protection	IPX4D	IPX4D	IPX4D	IPX4D

	VU 306/6-5 OV (H-GB) ecoTEC plus
Electric connection	230 V / 50 Hz
Built-in fuse (slow-blow)	T2/2A, 250V
Max. electrical power consumption	60 W
Standby electrical power consumption	2 W
Level of protection	IPX4D

Index

A
Air index setting ... 16
Air/flue pipe ... 11
Air/flue pipe, installed ... 4
Article number ... 6
Auxiliary relay ... 13
B
Burner anti-cycling time ... 17
C
Calling up the fault memory ... 19
CE label ... 6
Check programmes ... 14
Checking the burner ... 18
Checking the CO_2 content ... 16
Cleaning the condensate siphon ... 19
Cleaning the heat exchanger ... 18
Combustion air ... 4
Completing inspection work ... 19
Completing maintenance work ... 19
Completing repair work ... 21
Completing, repair work ... 21
Condensate drain pipework ... 10
Contact details ... 13
Controller ... 12
Corrosion ... 4
D
Decommissioning ... 21
Decommissioning the product ... 21
Documents ... 6
Draining the product ... 19
E
Electricity ... 4
Ending, installation assistant ... 13
F
Fault codes ... 19, 29
Filling mode ... 13
Filling the condensate siphon ... 15
Flue gas route ... 4
Front casing, closed ... 4
Frost ... 5
H
Handing over to the operator ... 17
Heating partial load ... 13
Hot water temperature ... 13
I
Identification plate ... 6
If you smell gas ... 3
Inspection work ... 17, 22
Installation assistant, ending ... 13
Installation assistants, restarting ... 14
Installation site ... 4
Installer level, calling up ... 12
Installing the front casing ... 9
Installing the side section ... 9
Intended use ... 3
L
Language ... 13
M
Mains connection ... 11
Maintenance work ... 17, 22
Minimum clearance ... 8
Multi-functional module ... 13
O
Operating concept ... 12
P
Power supply ... 11
Preparing the repair work ... 19
Preparing, repair work ... 19
R
Regulations ... 5
Removing the air intake pipe ... 17
Removing the burner ... 17
Removing the flue pipe ... 17
Removing the gas-air mixture unit ... 17
Removing the side section ... 9
Replacing the burner ... 19
Replacing the heat exchanger ... 20
Replacing the main PCB ... 20
Resetting the burner anti-cycling time ... 17
S
Safety device ... 4
Schematic drawing ... 4
Serial number ... 6
Setting the burner anti-cycling time ... 17
Setting the CO_2 content ... 16
Spare parts ... 17
Starting, installation assistants ... 14
Status codes ... 12
Supply of combustion air ... 4
Switching on the product ... 15
T
Target feed temperature ... 13
Telephone number, competent person ... 13
Test programmes ... 14
Tool ... 5
Transport ... 3
Transporting ... 7
Treating the heating water ... 14
U
Unloading the box ... 7
Unpacking the product ... 7
User interface, replacing the PCB ... 21
V
Voltage ... 4
W
Wall-mounting the product ... 8
Weight ... 8

0020200871

0020200871_00_R1 ▮ 22.06.2015

Vaillant Ltd.
Nottingham Road ▮ Belper ▮ Derbyshire ▮ DE56 1JT
Telephone 03 30 100-34 61 ▮ Telephone (renewables) 02 07 022-09 28
Vaillant Service Solutions 03 30 100-31 43 ▮ Spares Technical Enquiries 177 359 66 15
info@vaillant.co.uk ▮ technicalspares@groupservice.co.uk
www.vaillant.co.uk

© These instructions, or parts thereof, are protected by copyright and may be reproduced or distributed only with the manufacturer's written consent.