For the competent person

Installation and maintenance instructions

uniSTOR

VIH /2 S

GB, IE

spares & parts online IBASIS.co.uk

Vaillant

Table of contents

1 Notes on the documentation ... 3
1.1 Other applicable documents ... 3
1.2 Storing documents ... 3
1.3 Symbols used ... 3
1.4 Applicability of the instructions ... 3
1.5 Cylinder identification plate ... 3
1.6 CE label ... 3
1.7 Benchmark ... 3

2 Safety instructions and regulations ... 4
2.1 Safety and warning information ... 4
2.1.1 Classification of action-related warnings ... 4
2.1.2 Structure of warnings ... 4
2.2 Intended use ... 4
2.3 General safety instructions ... 5
2.4 Overview of EU standards ... 6
2.5 General requirements ... 6
2.5.1 Preliminary remarks ... 6
2.5.2 Related documents ... 6

3 Description of the unit ... 8
3.1 Description of the cylinder ... 8
3.1.1 Safety devices ... 10
3.1.2 Cylinder operating elements ... 10
3.1.3 Electric immersion heater ... 11
3.1.4 Hot water temperature regulation ... 11
3.1.5 Electrical wiring ... 11
3.1.6 Combination of uniSTOR domestic hot water cylinder and controllers ... 11
3.2 Technical data ... 12

4 Assembly ... 14
4.1 Scope of delivery ... 14
4.2 Transporting the cylinder ... 14
4.3 Installation site ... 14

5 Installation ... 15
5.1 Installing pipes for the reheating circuit ... 15
5.2 Installing hot water pipes ... 16
5.3 Installation of cold mains inlet ... 16
5.3.1 Pressure in cold mains inlet ... 16
5.3.2 Mounting the safety assembly ... 17
5.3.3 Mounting the expansion vessel ... 17
5.3.4 Mounting the drain valve ... 18
5.3.5 Laying the pipes to the tundish ... 18
5.4 Installation of discharge pipe ... 18
5.4.1 Design of discharge pipe ... 18
5.4.2 High drain ... 19
5.5 Electrical installation ... 20
5.5.1 Electrical connection of control components ... 20
5.5.2 Connecting up the electric immersion heater ... 21
5.5.3 Options for combining control components ... 22
5.5.4 Installing the control components in accordance with the connection wiring diagrams ... 24

6 Commissioning ... 28
6.1 Flushing the reheating circuit ... 28
6.2 Water treatment ... 28
6.3 Filling the cylinder ... 29
6.4 Filling the central heating system ... 30
6.5 Commissioning the gas-fired wall-hung boiler ... 31
6.6 Filling in the cylinder commissioning checklist ... 31
6.7 Handover to the operator ... 31

7 Inspection and maintenance ... 32
7.1 Checking the temperature and pressure relief valve and expansion relief valve ... 33
7.2 Checking the charge pressure of the expansion vessel ... 33
7.3 Draining the cylinder ... 33

8 Fault finding ... 33

9 Taking the cylinder out of service ... 35
9.1 Temporarily taking the cylinder out of service ... 35
9.2 Permanently taking the cylinder out of service ... 35

10 Recycling and disposal ... 35
10.1 Cylinder disposal ... 35
10.2 Disposal of packaging ... 35

11 Customer service and manufacturer's guarantee ... 36
7.1 Vaillant service ... 36
7.2 Vaillant guarantee ... 36

1 Notes on the documentation

The following instructions are intended to guide you through the entire documentation. Other documents apply in addition to these operating instructions.
We do not accept liability for any claims or damages resulting from failure to observe these instructions.

1.1 Other applicable documents

➤ When installing the cylinder, you must pay attention to the installation instructions for components of the system.

These installation instructions are enclosed with the various system components as well as additional components.

➤ You must also observe all operating instructions included with the system components.

1.2 Storing documents

➤ Pass these installation instructions and all other applicable documents and, if necessary, any required tools to the system operator.

The system operator will store these so that they are available when required.

1.3 Symbols used

The symbols used in the text are explained below.

Symbol that denotes useful tips and information

➤ Symbol for a required action

1.4 Applicability of the instructions

These instructions apply for the following only:

Unit type	Cylinder volume	Article number
VIH GB 120/2 S	120 litres	0020115403
VIH GB 155/2 S	155 litres	0020115406
VIH GB 180/2 S	180 litres	0020115409
VIH GB 210/2 S	210 litres	0020115412
VIH GB 260/2 S	260 litres	0020115415
VIH GB 310/2 S	310 litres	0020115418

Table 1.1 Applicability of the instructions

➤ The article number of the unit is displayed on the identification plate.

1.5 Cylinder identification plate

The identification plate is attached to the front of the cylinder at the factory.

1.6 CE label

CE labelling shows that, based on the type overview, the units comply with the basic requirements of the following directives:

- Low voltage directive (Council Directive 2006/95/EC)
- Electromagnetic compatibility directive (Council Directive 2004/108/EC)

1.7 Benchmark

Vaillant Ltd. supports the Benchmark Initiative. You will find the Benchmark Logbook on the last page of this instruction manual. It is very important that this document be filled out properly when installing, commissioning and handing-over to the operator of the installation. Installers should point out also the service record section for completion following service calls to this appliance.
Benchmark places responsibilities on both manufacturers and installers. The purpose is to ensure that customers are provided with the correct equipment for their needs, that it is installed, commissioned and serviced in accordance with the manufacturer's instructions by competent persons approved at the time by the Health and Safety Executive and that it meets the requirements of the appropriate Building Regulations.
The Benchmark Checklist can be used to demonstrate compliance with Building Regulations and should be provided to the customer for future reference.
Installers are required to carry out installation, commissioning and servicing work in accordance with the Benchmark Code of Practice which is available from the Heating and Hot water Industry Council who manage and promote the Scheme.
Visit "www.central heating.co.uk" for more information.

benchmark COLLECTIVE MARK
THE MARK OF QUALITY FOR THE INSTALLATION, COMMISSIONING AND SERVICING OF DOMESTIC HEATING AND HOT WATER SYSTEMS

2 Safety instructions and regulations

2.1 Safety and warning information

When conducting installation and maintenance work, observe the general safety instructions and the warning notes which appear before each of the actions.

2.1.1 Classification of action-related warnings

The action-related warnings are classified in accordance with the severity of the possible danger using the following warning signs and signal words:

Warning sign	Signal word	Explanation
	Danger!	Imminent danger to life or risk of severe personal injury
	Danger!	Risk of death from electric shock
	Warning!	Risk of minor personal injury
	Caution!	Risk of material or environmental damage

2.1.2 Structure of warnings

Warning signs are identified by an upper and lower separating line and are laid out according to the following basic principle:

Signal word!
Type and source of danger!
Explanation of the type and source of danger.
➤ Measures for averting the danger

2.2 Intended use

Vaillant cylinders are constructed using state-of-the-art technology in accordance with recognised safety regulations.
Nevertheless, there is still a risk of injury or danger of death to the operator or others or of damage to the unit and other property in the event of improper use or use for which the unit is not intended.
Vaillant-cylinders are not intended for use by persons (including children) with physical, sensory or mental impairments or who have inadequate experience and/or knowledge, unless they are supervised by a person responsible for their safety or have been given instructions by this person regarding the operation of the unit. Children must be supervised to ensure that they do not play with the unit.

Vaillant uniSTOR VIH GB 120/2 S, VIH GB 155/2 S, VIH GB 180/2 S, VIH GB 210/2 S, VIH GB 260/2 S, and VIH GB 310/2 S domestic hot water cylinders are unvented, indirectly heated domestic hot water cylinders designed for use with gas-fired wall-hung boilers as per GB standards for hot water supply systems. The cylinders work with the pressure of the water supply line and do not need a cold water tank for their supply.
They are exclusively for the provision of hot potable water to a temperature of up to 80 °C. They may only be used for this purpose. The cylinders can be used in combination with a gas-fired wall-hung boiler for hot water production in accordance with GB standards.
Any other use that is not specified in these instructions, or use beyond that specified in this document shall be considered improper use.
Any direct commercial or industrial use is also deemed to be improper.
The manufacturer/supplier is not liable for any claims or damage resulting from improper use. The user alone bears the risk.
Intended use includes the following:
- observance of accompanying operating, installation and servicing instructions for Vaillant products as well as for other parts and components of the system.
- compliance with all inspection and maintenance conditions listed in the instructions.

Improper use of any kind is prohibited!

At the end of these instructions there is a commissioning report which you must fill in and hand over to the operator.
All installers should have a current ID card and registration number. The cylinder must be installed by a competent person approved at the time by the Health and Safety Executive to the prevailing standards, installation book and building regulations at the time of installation.

2.3 General safety instructions

Installation, commissioning-up, and maintenance
Installation and adjustment as well as service, maintenance and repair must be carried out by a competent person approved at the time by the Health and Safety Executive and be in accordance with the relevant requirements of the Local Authority, Building Regulations, Building Regulations (Scotland), Building Regulations (Northern Ireland), and the bye-laws of the local Water Undertaking.

All electrical wiring must be carried out by a competent electrician and be in accordance with the current I.E.E. Wiring Regulations.
- Make sure that the system has been planned in accordance with technical regulations and all applicable planning standards.

Risk of death due to lack of safety devices
A lack of safety devices (e.g. expansion relief valve, expansion vessel) can lead to potentially fatal scalding and other injuries, e.g. due to explosions.
The schematic drawings included in this document do not show all safety devices required for correct installation.
- Install the necessary safety devices in the system.
- Inform the operator about the function and position of the safety devices.
- Observe the applicable national and international laws, standards and guidelines.

Cylinder safety information
Following an inspection, it was ascertained that this product complies with the building regulations for closed hot water cylinder systems and must not be changed or rebuilt in any way.
- When replacing parts, only original replacement parts from Vaillant Ltd. may be used.

The installation must be approved in accordance with the building regulations.
- Installation plans must be disclosed to the relevant authorities.

Important:
As stipulated in the manual "Handling Operations Regulations 1992", the weight of the unit exceeds that which should be lifted by one person alone.

Prior to assembly, store the cylinder in an upright position in a dry place.

Electric potential equalisation
If you use an electric immersion heater in the cylinder, the external voltage may build up electrical potential in the water which can result in the electrochemical corrosion of the electric immersion heater.

If the cylinder is connected with pipes made of non-metallic materials and is not earthed, corrosion damage can occur.
- Make sure that both the hot water and cold mains inlets on the cylinder itself are connected to the earth line by means of an earth cable.
- You must also make sure that the electric immersion heater is connected to the earth line via the earthing terminal.

Risk of scalding and damage from escaping hot or cold water.
- If you use plastic pipes for the hot or cold water connection of the unit, you must only use pipes which are temperature-resistant up to 95 °C under a pressure of 1.0 MPa (10 bar).

Improper use and/or the use of unsuitable tools may result in damage (e.g. water leaks).
- Always use a suitable open-end wrench (spanner) to tighten or undo threaded connections. Do not use pipe wrenches, extensions, etc.

If the water does not meet the requirements of The Water Supply (Water Quality) Regulations 2000 (Amendment) Regulations 2007, corrosion damage may occur on the cylinder.
- Only use the cylinder to heat potable water.

Preventing frost damage
You should not turn the gas-fired wall-hung boiler off completely so that you can still use all of the safety functions for your heating system. If you want to take the unit out of operation for a relatively long period of time in an unheated room at risk from frost, you must completely drain the cylinder.

Avoiding damage caused by leaks
If there are leaks in the pipework, close off the cold water stop valve on the safety assembly and notify a competent person to rectify the leaks.

Preventing damage due to unauthorised changes to the unit
Changes to the supply lines, relief valve termination, and expansion relief valve may only be carried out by a competent person!

Avoiding burns and scalds
Install a hot water thermostat mixer in the system to protect against scalding.

2.4 Overview of EU standards

Pressure equipment directive 97/23/EC
Directive of the European Parliament and Council of 29th May 1997 for the approximation of the laws on pressure equipment of the Member States

EN 12897:2006
Water supply - specification for indirectly heated unvented (closed) domestic hot water cylinders

EN 806-1
Specifications for installations inside buildings conveying water for human consumption - Part 1: General

EN 1717
Protection against pollution of potable water installations and general requirements of devices to prevent pollution by backflow

EN 60335-1
Safety of household and similar electrical appliances; Part 1: General principles (IEC 60335-1: 2001, modified)

EN 60335-2-21
Safety of household and similar electrical appliances; Part 2: Particular requirements for storage water heaters (domestic hot water cylinders and hot water boilers) (IEC 335-2-21: 1989 and supplements 1; 1990 and 2; 1990, modified)

EN 60335-2-73
Safety of household and similar electrical appliances; Part 2: Particular requirements for fixed immersion heaters (IEC 335-2-73: 1994, modified)

EN 60529
Degrees of protection provided by casing (IP code) - (IEC 60529: 1989 + A1: 1999)

EN 60529-1
Degrees of protection provided by casing (IP code) - (IEC 60529: 1989 + A1: 1999)

EN 60730-1
Automatic Electrical Controls for Household and Similar Use - Part 1: General requirements (IEC 60730-1: 1999, modified)

EN 60730-2-9
Automatic Electrical Controls for Household and Similar Use - Part 2-9: Particular requirements for temperature-sensing controls (IEC 60730-2-9: 2000, modified)

Directive 2004/108/EC
Directive 2004/108/EC of the European Parliament and Council of 15th December 2004 on the approximation of the laws of the Member States relating to electromagnetic compatibility and repealing Directive 89/336/EEC

EC low voltage directive 2006/95/EC
Directive 2006/95/EC of the European Parliament and Council of 12th December 2006 on the harmonisation of the laws of Member States relating to electrical equipment designed for use within certain voltage limits

Lightning protection

ENV 61024-1
Protection of structures against lightning –
Part 1: General principles (IEC 1024-1: 1990; modified)
BS 6651: Code of practice for protection of structures against lightning

2.5 General requirements

2.5.1 Preliminary remarks

This appliance must only be installed and commissioned by a suitably competent person. Please check with your installer that he is able to carry-out all the necessary works including official notification of the works to the relevant body upon completion.

2.5.2 Related documents

The installation of the appliance and any associated hot water system must be in accordance with (but not limited to) the following; COSHH regulations, Gas Safety (Installation and Use) Regulations 1998, Health and Safety Document No. 635 (The Electricity at Work Regulations 1989), BS7671 (IEE Wiring Regulations) and the Water Supply (Water Fitting) Regulations 1999, or
The Water Bylaws 2000 (Scotland). It should also be in accordance with the relevant requirements of the Local Authority, Building Regulations, The Building Regulations (Scotland), The Building Regulations (Northern Ireland) and the relevant recommendations of the following British Standards:
BS 6700: Services supplying water for domestic use within buildings and their curtilages.
BS 6798: Specification for installation of gas fired boilers not exceeding 60 kW input.
BS 6891: Specification for installation of low pressure gas pipework up to 28 mm (R1) in domestic premises (2nd family gas).
BS 7593: Treatment of water in domestic hot water central heating systems. Institute of Gas Engineers Publication IGE/UP/7/1998: "Guide for gas installations in timber framed housing"
BS. 5482 Pt. 1 Domestic butane and propane gas burning installations.
IGE/UP1 Soundness testing and purging of industrial and commercial gas installation.
IGE/UP2 Gas installation pipework, boosters and compressors on industrial and commercial premises.

IGE/UP10 Installation of gas appliances in industrial and commercial premises.
BS. 6644 Installation of gas fired hot water boilers of rated inputs between 60 kW and 2 MW (2nd and 3rd family gases).
BS. 5449 Forced circulation hot water central heating systems for domestic premises. Note: only up to 45 kW.
BS. 6880 Low temperature hot water heating systems of output greater than 45 kW.
Part 1 Fundamental and design considerations.
Part 2 Selection of equipment.
Part 3 Installation, commissioning and maintenance.
BS. 4814 Specification for: Expansion vessels using an internal diaphragm, for sealed hot water heating systems.
BS. 5440 Installation and maintenance of flues and ventilation for gas appliances of rated input not exceeding 70 kW net (1st, 2nd and 3rd family gases).
Part 1 Specification for installation of flues.
Part 2 Specification for installation and maintenance of ventilation for gas appliances.

spares & parts online IBASIS.CO.UK

3 Description of the unit

3.1 Description of the cylinder

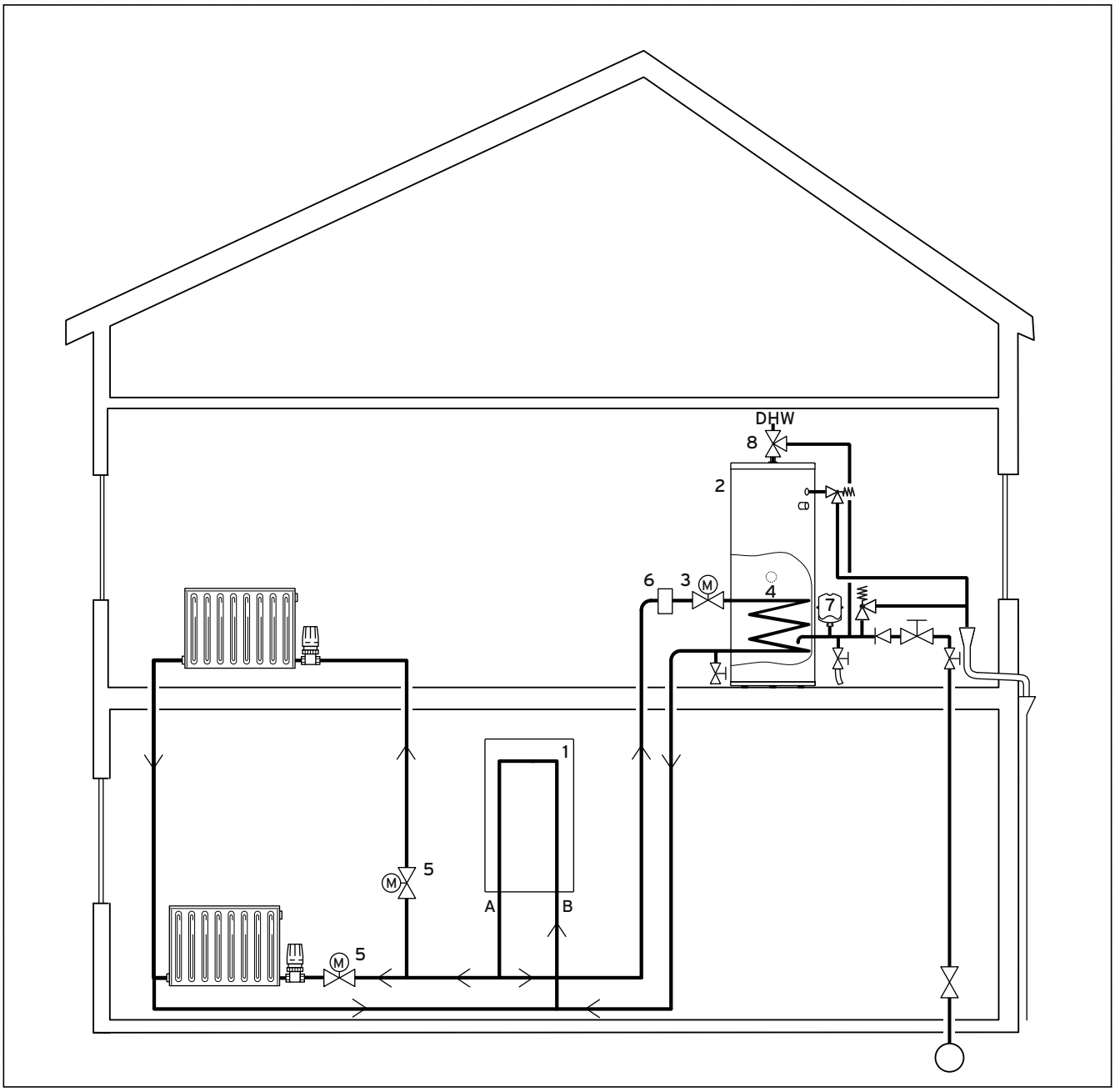

Fig. 3.1 Hydraulics diagram for the connection of the unvented domestic hot water cylinder

Key

1 Gas-fired wall-hung boiler
2 Cylinder
3 Two port motorised valve (230 V, supplied with cylinder)
4 Electric immersion heater
5 Two port motorised valve (230 V)
6 Automatic air separator system
7 Hot water expansion vessel
8 Hot water thermostat mixer
A Primary heater flow
B Primary heater return

If a cylinder is fitted very high up in the building, negative pressure may form in the cylinder. Under such circumstances, the competent person must decide whether an anti-vacuum valve is required in order to prevent damage to the cylinder. If, as a result of draining or thermal contraction of the drinking water, the negative pressure in the cylinder is too high, an anti-vacuum valve ensures pressure compensation as a result of air flowing into the cylinder.

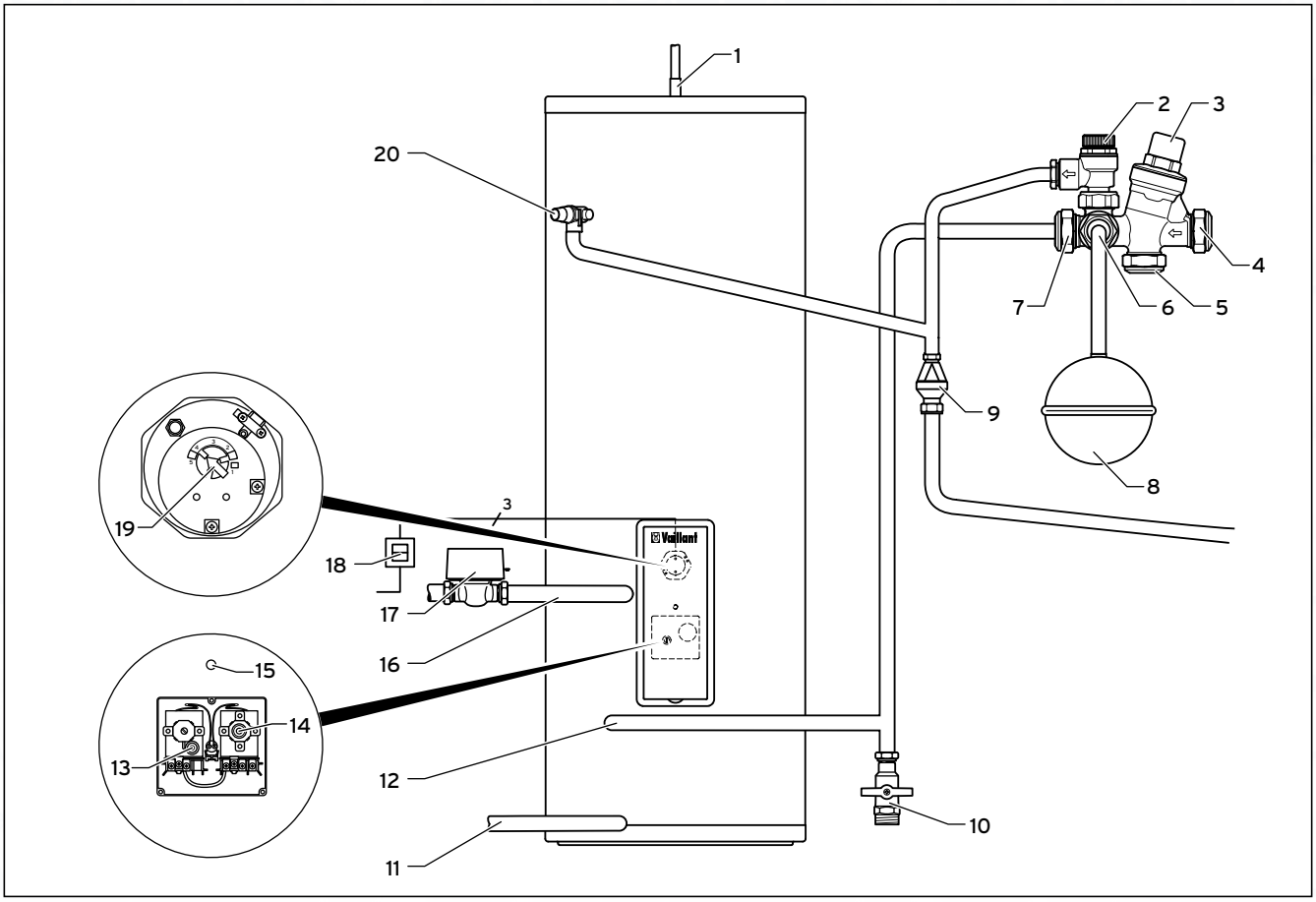

Fig. 3.2 Functional elements of uniSTOR domestic hot water cylinder

Key

1 Hot water draw off
2 Expansion relief valve (one-way valve, 6.0 bar)
3 Pressure reducing valve (3.5 bar) with line strainer
4 Cold water connection
5 Balanced pressure cold water inlet
6 Connection for hot water expansion vessel
7 Cylinder connection
8 Hot water expansion vessel
9 Tundish
10 Cylinder drain valve
11 Primary heater return
12 Cold water inlet
13 Primary heating circuit thermal cut-out, set to 80 °C
14 Cylinder thermostat (25°C to 65°C)
15 Primary heating circuit immersion sleeve (NTC)
16 Primary heater flow
17 Two port motorised valve
18 Double pole isolating switch for electric immersion heater
19 Electric immersion heater with thermostat and thermal cut-out
20 Temperature and pressure relief valve (90°C, 7 bar)

If the entire system is wired using the Vaillant eBUS system solution, the thermal cut-out for the primary heating circuit (**13**) is not used. If you use a 230 V controller from a third-party manufacturer, you must connect the thermal cut-out for the primary heating circuit with the 2-way motorised valve, in order to insulate the primary heat source if a fault occurs.

The uniSTOR domestic hot water cylinder is available in six sizes: 120, 155, 180, 210, 260, and 310 litres. The cylinder is made from stainless steel and is insulated with EPS with heat radiation absorbers. The cylinder is supplied along with all required cold and hot water control devices and a two port motorised valve.
The cylinder works with the pressure of the water supply line and does not need a cold water tank for its supply. The cylinder has hot and cold water inlets with a diameter of 22 mm. To enable the cylinder to work as well as possible, a cold water supply with a dynamic pressure and flow rate that are appropriate for the system is required (→ **section 5.3.1**).

Typical applications:
- Property with a single bathroom: uniSTOR 120 litres
- Property with a single bathroom and additional shower: uniSTOR 120 or 155 litres
- Property with two bathrooms: uniSTOR 155 or 180 litres
- Property with two bathrooms and additional shower: uniSTOR 180 or 210 litres
- Larger properties: uniSTOR 260 or 310 litres

3.1.1 Safety devices

The cylinder is delivered with all safety and control devices for the operation of the unvented domestic hot water supply system:
- Temperature and pressure relief valve (90 °C, 7 bar)
- Pressure reducing valve (3.5 bar) with line strainer
- Expansion relief valve (one-way valve, 6.0 bar)
- Thermal cut-out for electric immersion heater
- Primary heating circuit thermal cut-out, set to 80 °C

If the entire system is wired using the Vaillant eBUS system solution, the thermal cut-out for the primary heating circuit (**13**) is not used. If you use a 230 V controller from a third-party manufacturer, you must connect the thermal cut-out for the primary heating circuit with the 2-way motorised valve, in order to insulate the primary heat source if a fault occurs.

3.1.2 Cylinder operating elements

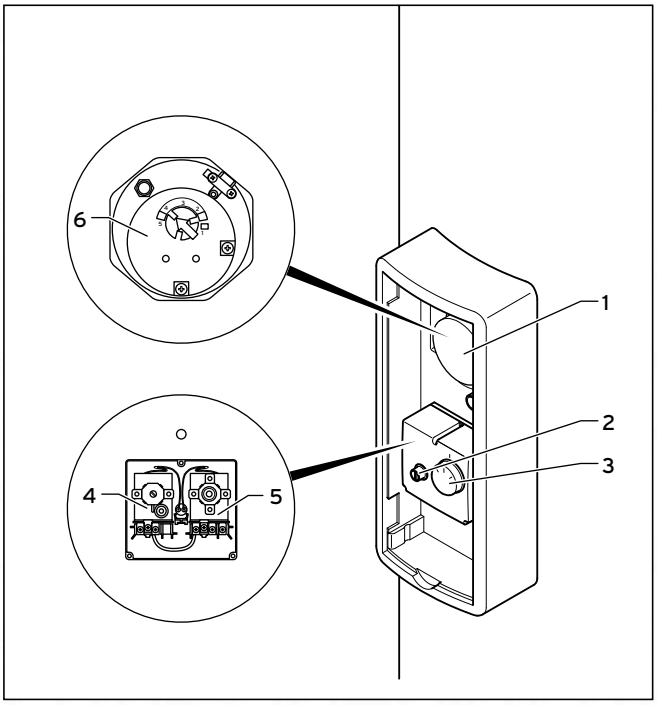

Fig. 3.3 Cylinder operating elements

Key
1 Electric immersion heater cover
2 Cover cap for reset button for reheating circuit TCO
3 Primary heating circuit temperature controller
4 Primary heating circuit thermal cut-out
5 Cylinder thermostat
6 Electric immersion heater

If you use a Vaillant eBUS system solution:
- The function of the temperature controller for the primary heating circuit (**3**) is transferred from the Vaillant dual-channel eBUS controller.
- The function of the thermal cut-out for the primary heating circuit (**4**) is transferred from the eBUS-compatible Vaillant gas-fired wall-hung boiler.

The following are premounted at the factory for the unvented uniSTOR domestic hot water cylinder:
- Cylinder thermostat (**5**) and reheating circuit thermal cut-out (**4**)
- Electric immersion heater (**6**) with thermal cut-out and cylinder thermostat

The cylinder must be properly wired in order to comply with G3 building regulations.

3.1.3 Electric immersion heater

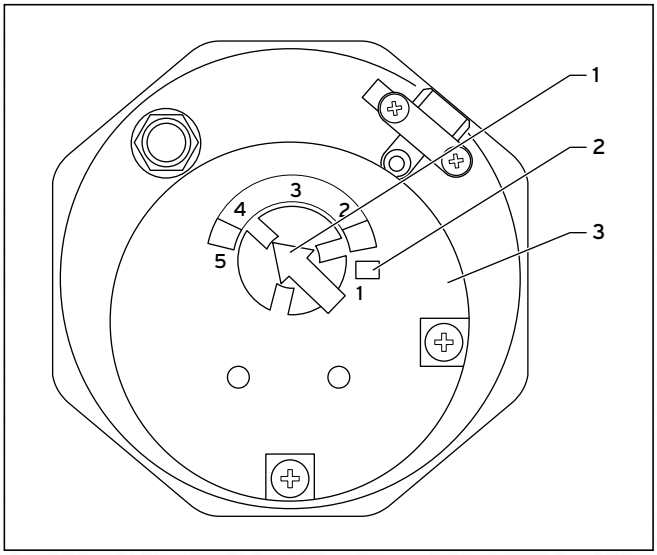

Fig. 3.4 Electric immersion heater operating elements

Key
1 Electric immersion heater temperature controller
2 Electric immersion heater TCO reset button
3 Electric immersion heater

The cylinder is equipped with an additional electric immersion heater (**3**) with a heating output of 3 kW. The electric immersion heater is located behind the top front cladding. The electric immersion heater is designed for use in unvented cylinders and has a thermostat with a temperature controller (**1**) and a thermal cut-out (TCO) with a reset button (**2**).

If you need to make a replacement, you must use the correct electric immersion heater with a thermal cut-out for overheating protection. The seal of the electric immersion heater must also always be replaced. Use only original replacement parts from Vaillant Ltd.

Inspection access to the cylinder is available through the immersion heater boss.

Setting the hot water temperature
If you use a Vaillant dual-channel eBUS controller, you set the hot water temperature on the controller and not on the cylinder's electric immersion heater.
If you use a 230 V controller from a third-party manufacturer, you set the hot water temperature by setting the temperature controller (**1**) for the electric immersion heater so that the arrowhead points to one of the numbers between 1 and 5. The following table contains the approximate hot water temperature for each of the five settings.

Setting	Hot water temperature
1	20 °C
2	35 °C
3	45 °C
4	60 °C
5	68 °C

Table 3.1 Setting the hot water temperature

3.1.4 Hot water temperature regulation

You can control the hot water temperature using a Vaillant dual-channel eBUS controller or a separate hot water controller.

Danger!
Risk of burns and scalds!
Water at a temperature of more than 60 °C could be delivered to the hot water draw-off points.
- ➤ Install a hot water thermostat mixer in the hot water pipe to provide effective scald protection.
- ➤ Set the hot water thermostat mixer to less than 60 °C and check the temperature at a hot water draw-off point.

3.1.5 Electrical wiring

If you use an eBUS-compatible Vaillant gas-fired wall-hung boiler, you can use an eBUS-compatible Vaillant Control Centre for the wiring in order to reduce the effort required for the cabling and to achieve optimum control of the system.
If you are using a non-eBUS-compatible Vaillant gas-fired wall-hung boiler or a third-party boiler, you can use a standard cabling box.

3.1.6 Combination of uniSTOR domestic hot water cylinder and controllers

The following controllers can be used to regulate hot water production:
Vaillant dual-channel eBUS controller in conjunction with an eBUS-compatible Vaillant Control Centre.
If you are using an eBUS-compatible Vaillant gas-fired wall-hung boiler, you can control the heating using a programmable Vaillant VRT room thermostat or a VRC weather compensator.
If you use a non-eBUS-compatible Vaillant gas-fired wall-hung boiler or a third-party boiler, you can use the Vaillant VRT 30 room thermostat or one of the room thermostats commonly available on the market with a suitable 230 V dual-channel timer.

3.2 Technical data

	Unit	VIH GB 120/2 S	VIH GB 155/2 S	VIH GB 180/2 S	VIH GB 210/2 S	VIH GB 260/2 S	VIH GB 310/2 S
Total capacity	litres	120	155	180	210	260	310
Actual capacity	litres	119,2	149,1	176,6	211,2	250,3	298,5
Hot water capacity	litres	104,0	136,7	166,4	203,9	247,5	270,5
Maximum supply pressure to pressure reducing valve	MPa (bar)	1,2 (12)					
Rated pressure of cylinder	MPa (bar)	0,7 (7)					
Maximum operating pressure of heating coil	MPa (bar)	0,35 (3,5)					
Operating pressure	MPa (bar)	0,35 (3,5)					
Pressure reducing valve	MPa (bar)	0,35 (3,5)					
Expansion relief valve	MPa (bar)	0,6 (6)					
Temperature and pressure relief valve	°C, MPa (bar)	90, 0,7 (7)					
Charge pressure of hot water expansion vessel	MPa (bar)	0,4 (4)					
Maximum temperature of heating circuit	°C	85					
Maximum temperature of potable hot water	°C	85					
Standing heat loss	kW/24 h	1,26	1,53	1,66	1,89	2,07	2,26
Heat up time according to EN 12897	mins	18	23	24	28	35	42
Recovery time (70% capacity)	mins	16	18	17	20	25	30
Primary heat exchanger performance	kW	18,6	18,8	22,0	22,6	22,3	20,4
Flow rate for primary heat exchanger performance	l/min	23,3					
Primary heat exchanger pressure drop	mbar	97	97	116	116	116	115
Primary heat exchanger volume	litres	2,94	2,94	3,56	3,56	3,56	3,56
Primary heat exchanger surface area	m^2	0,62	0,62	0,75	0,75	0,75	0,75
Dimensions							
Height	mm	1001	1191	1371	1593	1843	2153
Height with hot water draw off	mm	1033	1223	1403	1625	1875	2185
Topple measure	mm	1138	1308	1473	1680	1918	2217
Diameter	mm	554,5					
Depth	mm	633					
Net weight	kg	26	29	32	36	41	46
Weight (full)	kg	145	177,8	209	248	291	345
Connections							
Cold water inlet		22 mm unprofiled pipe (crimp joints)					
Hot water draw off		22 mm unprofiled pipe (crimp joints)					
Pressure-controlled cold water inlet		22 mm unprofiled pipe (crimp joints)					
Secondary return		15 mm unprofiled pipe (crimp joints)					
Primary heater flow		22 mm unprofiled pipe (crimp joints)					
Primary heater return		22 mm unprofiled pipe (crimp joints)					
Primary heating circuit immersion sleeve size	mm	8					
Electrical connections							
Immersion heater (according to ENBS 60335)		2.7 kW, 230 V, 50 Hz					
Length of immersion heater	inch	14					
Two port motorised valve		230/240 V, 50 Hz					
Cylinder thermostat		230/240 V, 50 Hz					
Material data							
Cylinder body material		Stainless steel (1.4521)					
Cylinder jacket material		Polypropylene					
Insulation material		EPS with heat radiation absorber					
Insulation thickness	mm	50					
Corrosion protection		Stainless steel					
Blowing agent for insulation material		Pentane (GWP < 5)					
ODP		0					

Tab. 3.2 Technical data for uniSTOR domestic hot water cylinder

The heat up time is based on a flow rate of 1400 l/h at 80 °C.
Temperature rise from 15 °C to 60 °C.

Dimensions

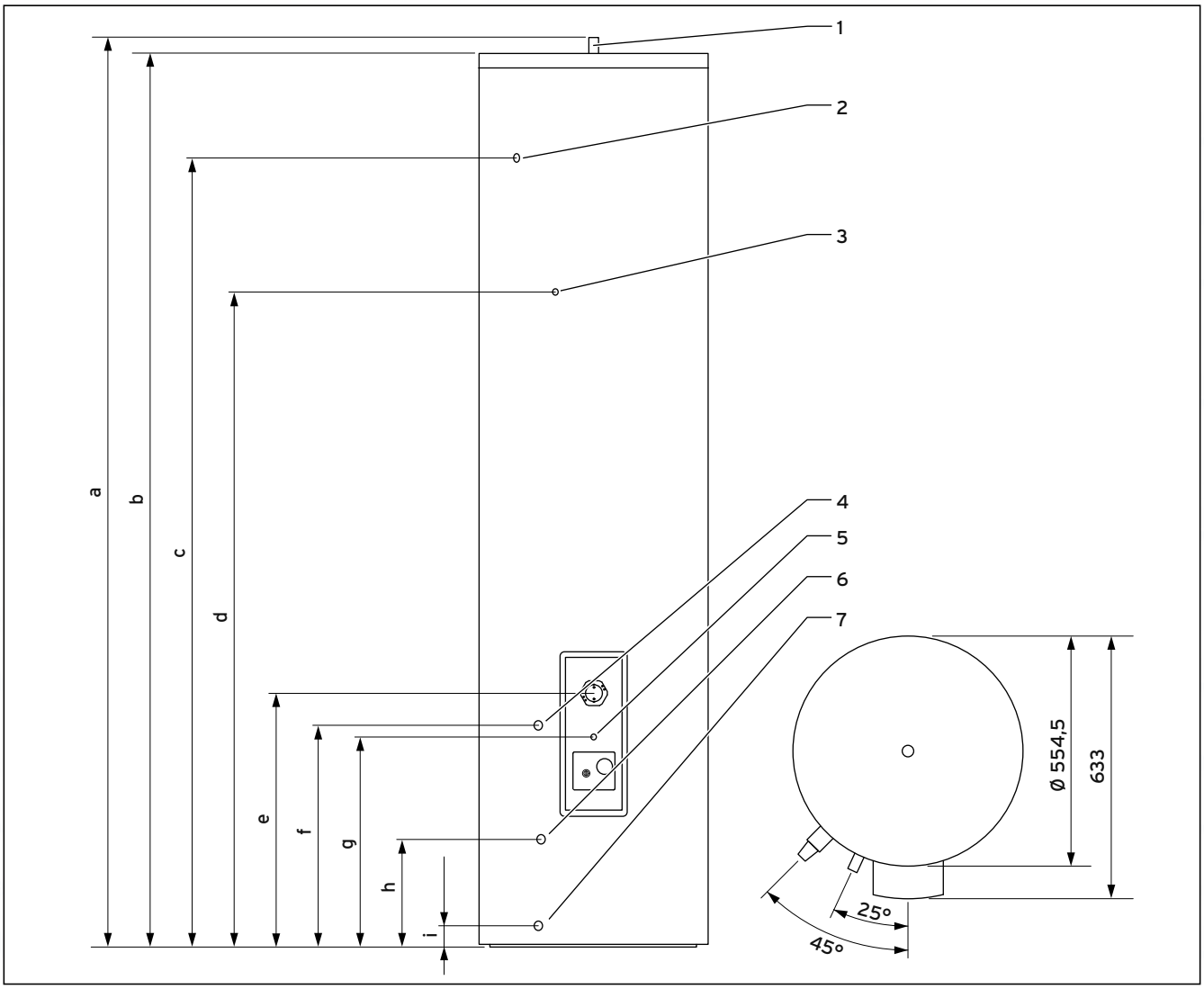

Fig. 3.5 Dimensions of uniSTOR domestic hot water cylinder

Key
1 Hot water draw off
2 Temperature and pressure relief valve connection
3 Secondary return
4 Primary heater flow
5 Primary heating circuit immersion sleeve
6 Cold mains inlet connection
7 Primary heater return

Unit type	a	b	c	d	e	f	g	h	i
VIH GB 120/2 S	1033	1001	749	714	616	534	506	259	51
VIH GB 155/2 S	1223	1191	939	857	616	534	506	259	51
VIH GB 180/2 S	1403	1371	1119	992	616	534	506	259	51
VIH GB 210/2 S	1625	1593	1341	1158	616	534	506	259	51
VIH GB 260/2 S	1875	1843	1591	1346	616	534	506	259	51
VIH GB 310/2 S	2185	2153	1901	1578	616	534	506	259	51

Tab. 3.3 Dimensions

4 Assembly

4.1 Scope of delivery

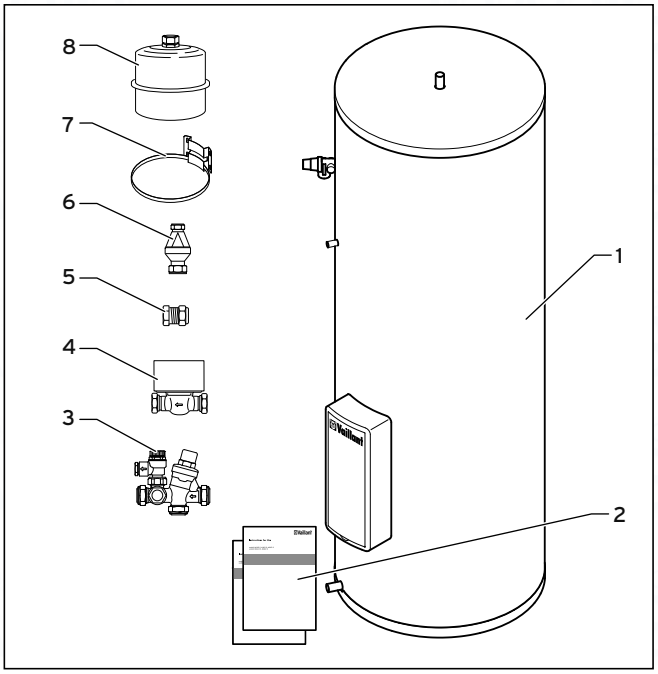

Fig. 4.1 Scope of delivery

Item	Quantity	Component
1	1	Domestic hot water cylinder with insulation in separate packaging
2	1	Installation and maintenance instructions and operating instructions (packaged with the cylinder)
In separate packaging:		
3	1	Safety assembly (pressure reducing valve, expansion relief valve, connections for pressure-controlled cold water inlet and hot water expansion vessel)
4	1	Two port motorised valve
5	1	15 mm compression cap for secondary return
6	1	Tundish
7	1	Assembly set for hot water expansion vessel
8	2	Hot water expansion vessel: 12 l for VIH GB 120/2 S and VIH GB 155/2 S 18 l for VIH GB 180/2 S and VIH GB 210/2 S 25 l for VIH GB 260/2 S and VIH GB 310/2 S

Table 4.1 Scope of delivery

- ➤ Check the scope of delivery for completeness.
- ➤ Make sure the cylinder is stored in an upright position in a dry environment prior to its installation.

4.2 Transporting the cylinder

Danger!
Risk of injury due to heavy load!
Heavy load can cause injuries.
- ➤ At least two people should lift the cylinder to prevent injuries.
- ➤ Use a suitable transportation aid (sack truck or similar).

- ➤ Transport the packaged cylinder to the installation site.
- ➤ Only remove the cylinder from its packaging once it reaches the installation site.

4.3 Installation site

Position the domestic hot water cylinder as near as possible to the heater to prevent unnecessary heat loss.

Place the cylinder in a suitable location in the building, paying attention to the following:
- The tundish discharge pipe must be installed with a minimum downward slope of 1:200 and must end in a safe and visible place.
- The installation surface must be flat and capable of bearing the weight of the full cylinder.
- The installation site must not be at risk of frost. If necessary, install a frost protection thermostat.
- The control system for the installed cylinder thermostat beneath the front plate must be easily accessible to the operator.
- There must be sufficient space for mounting, maintaining and replacing the electric immersion heater.
- The floor must be even.
- There must be sufficient space for installing, maintaining and replacing the expansion vessel.

- ➤ Choose a cylinder installation site that allows the potable water and heating lines to be laid in an appropriate manner.
- ➤ To prevent energy losses in accordance with current building regulations, provide all system pipes with thermal insulation.

5 Installation

Danger!
Risk of injuries and damage due to improper installation!
Improper installation can impede the operational safety of the unit.
- Only a competent person may install and commission the unit.
  This person takes responsibility for making sure that the unit is installed and commissioned for the first time correctly and in accordance with regulations.

Danger!
Risk of burns from lines!
There is a risk of burns from system pipes without thermal insulation. Energy losses also occur in such cases.
- Provide all system pipes with thermal insulation.
- Use screw connections to close all supply lines.

Caution!
Risk of damage resulting from improper use and/or unsuitable tools!
Improper use and/or unsuitable tools may result in material damage (e.g. gas or water leaks).
- Always use a suitable open-ended spanner to tighten or undo threaded connections.
- Do not use pipe wrenches, extensions, etc.

Caution!
Risk of damage from leaks!
Mechanical stress on supply lines can result in leaks and thus damage to the heat pump.
- Avoid mechanical stress on supply lines!

5.1 Installing pipes for the reheating circuit

- Make sure that the pipes in the reheating circuit between the gas-fired wall-hung boiler and cylinder are as short as possible. Use copper piping with a minimum diameter of 22 mm.

A heating pump is installed in all Vaillant gas-fired wall-hung boilers (apart from the ecoTEC plus 400 with open ventilation). If you are using the cylinder with another gas-fired wall-hung boiler as per GB standards, you may have to install a suitable heating pump in the reheating circuit.

Installing the two port motorised valve

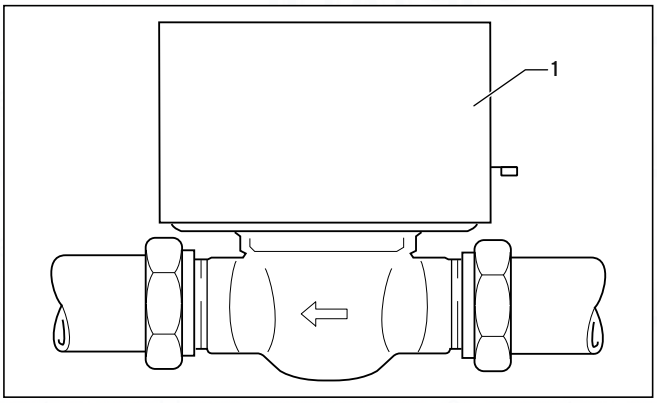

Fig. 5.1 Two port motorised valve

The two port motorised valve prevents the cylinder from overheating.
- Install the two port motorised valve (**1**) supplied with the cylinder in the flow line (**A → fig. 3.1**) of the gas-fired wall-hung boiler.
- Note the direction of flow, which is marked with arrows.

You can install the 2-way motorised valve vertically or horizontally. If you install the 2-way motorised valve horizontally, you must install the valve with the valve head facing upwards (**→ fig. 5.1**).

5.2 Installing hot water pipes

- Connect the hot water piping to the 22 mm hot water draw off of the cylinder.
- Lay the 22 mm piping up to the first T-piece.

The required diameter of subsequent pipes depends on the system design.

Installing the secondary circulation line

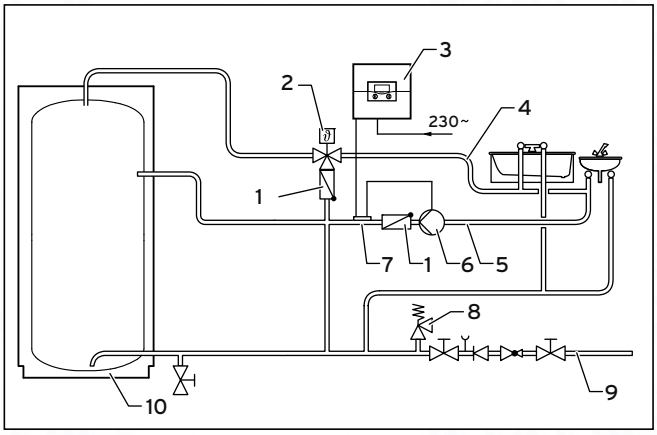

Fig. 5.2 Installing the secondary circulation line

Key
1 Non-return valve
2 Hot water thermostat mixer
3 Controller
4 Hot water pipe
5 Secondary circulation line
6 Circulation pump
7 Contact thermostat
8 Expansion relief valve
9 Cold mains inlet
10 Domestic hot water cylinder

Where possible, avoid installing a secondary circulation line, since a secondary circulation line results in higher energy consumption.

If you are not using the secondary return, this must be properly closed off with the cap included in delivery.

If you are installing a secondary circulation line, an additional expansion vessel may be required in certain circumstances.

If the installation of a secondary circulation line is required, keep secondary circulation operations to a minimum by only using circulation mode when required for demand and temperature reasons.
The cylinder has a connection with a 15 mm diameter for a second circulation line.

- Connect a WRAS-approved circulation pump (**6**) with a non-return valve to the secondary return.
- Connect the secondary circulation line (**5**) to the hot water pipe (**4**).

5.3 Installation of cold mains inlet

5.3.1 Pressure in cold mains inlet

The efficiency of an unvented cylinder depends on the available pressure in the cold mains inlet and the flow rate. To obtain optimum cylinder output, there must be a suitable cold mains inlet, i.e. the measured static line pressure must be at least 2.0 bar. A corresponding flow rate of at least 20 to 25 l/min must be available.

The pressure in the cold mains inlet will be reduced at times of high consumption. Thus, measurements should be taken at such times.

The cylinder still works satisfactorily with a pressure below 2 bar but the flow rate is reduced. If the pressure is below 1 bar, you should not install an unvented cylinder. Vaillant Ltd. can provide information on alternative hot water supply systems.

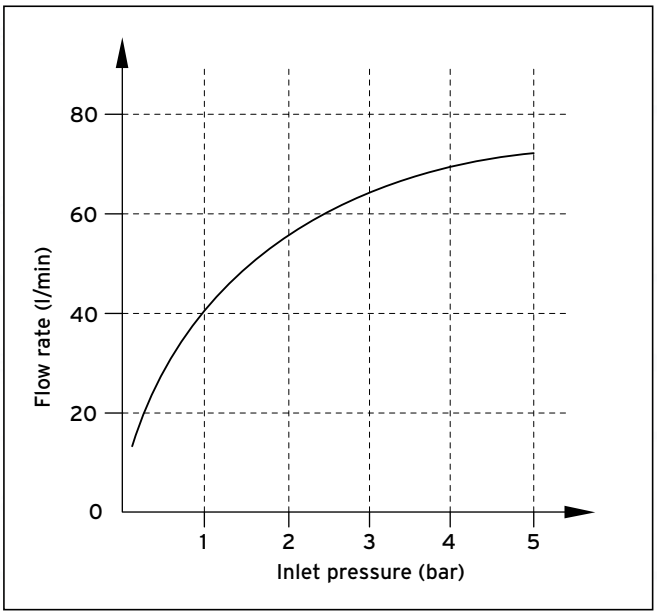

Fig. 5.3 Maximum flow rate of the cold water assembly based on the supply pressure

The displayed flow rates apply to installations in which the cold water supply has a dynamic pressure and flow rate appropriate for the system.
If the static water pressure is less than 1 bar, contact Vaillant Ltd.

5.3.2 Mounting the safety assembly

Caution!
Risk of damage to the cylinder as a result of excess pressure!
Excess pressure can cause the cylinder to burst.
- Make sure that there is no stop valve installed between the safety assembly and the cylinder.

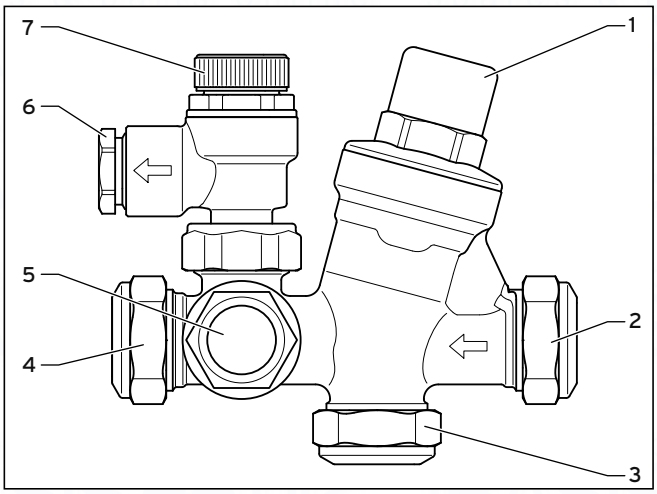

Fig. 5.4 Safety assembly

Key
1 Pressure reducing valve with line strainer
2 Cold water inlet
3 Pressure-controlled cold water inlet
4 Cylinder connection
5 Hot water expansion vessel connection
6 15 mm expansion relief valve connection
7 Expansion relief valve

- During the installation process, position the valves so that you are able to connect the 15 mm connection (**6**) of the expansion relief valve (**7**) with the tundish. Note the direction of flow, which is marked on the safety assembly with arrows.

The safety assembly must be installed horizontally with the expansion relief valve facing upwards (→ **fig. 5.4**) in order to prevent the build-up of dirt.

Caution!
Risk of damage to the cylinder as a result of excess pressure!
Excess pressure can cause the cylinder to burst.
- Make sure that the expansion relief valve outlet is not covered or closed.

- Mount the discharge pipe of the expansion relief valve with a constant slope to the outside. The discharge pipe must finish at a safe and visible point where there is no danger of it freezing up and where it poses no risk of injury to persons.
- Actuate the expansion relief valve regularly to prevent calcification.
- Connect the cylinder to the cylinder connection (**4**).
- For the pipe from the main stop valve of the building to the cylinder, use copper piping with a diameter of at least 22 mm to ensure that the cylinder is as efficient as possible. This is particularly important for installations with a balanced cold water inlet (**3**).
- Mount the safety assembly in the cold mains inlet on the cylinder.
- If necessary, establish the connection to the cold water inlet (**3**) with pressure compensation of the safety assembly.
- Depending on the fittings used and the type of the draw-off points, it may be necessary to install a backflow preventer in the pressure-controlled cold water inlet.

If you mount the safety assembly above the cylinder, you do not need to drain the cylinder in order to maintain the safety assembly. Make sure there is sufficient space for maintenance and connection of the discharge pipe of the expansion relief valve.

When the discharge pipes are connected, the expansion relief valve may not be more than 600 mm away from the temperature and pressure relief valve (→ **fig. 5.5**).

5.3.3 Mounting the expansion vessel

The Vaillant domestic hot water cylinder is delivered with an external expansion vessel.
Connect this expansion vessel to the installed safety assembly as follows:
- Screw the expansion vessel directly to the safety assembly via the provided connection (**5**) or
- Connect the expansion vessel with the safety assembly via a copper pipe or suitable hose line. Make sure the expansion vessel is supported sufficiently.
- Use the supplied wall bracket if you want to mount the expansion vessel to a wall.

In regions with high water pressure (4 bar or more), you can also connect the mixer tap for a bath or shower to the cold water inlet with pressure compensation (3) of the safety assembly. This ensures that the hot and cold water supply to the mixer tap have the same pressure. You should install the cold water supply for all other connections using a T-piece before the safety assembly in the cold mains inlet to the cylinder.

5.3.4 Mounting the drain valve

➤ Mount a drain valve (**10**) (➞ **fig. 3.2**) as low as possible between the cylinder and the safety assembly in the cold mains inlet.

The drain valve must be provided by the customer.
We recommend mounting a hose which reaches about 1 m under the base of the cylinder to the outlet of the drain valve.

5.3.5 Laying the pipes to the tundish

➤ Connect the temperature and pressure relief valve and the expansion relief valve to the tundish using 15 mm piping.
➤ Lay the tundish discharge pipe (➞ **section 5.4**).

The tundish discharge pipes must be laid at a sufficient distance from electrical components in accordance with valid building regulations.

5.4 Installation of discharge pipe

5.4.1 Design of discharge pipe

Danger!
Risk of burns and scalds resulting from escaping hot water!
In the event of a fault, hot water can escape suddenly from the discharge pipe of the expansion relief valve.
➤ Lay the discharge pipe so that it ends at an easily visible point inside or outside the building where escaping hot water does
not pose a risk to persons.

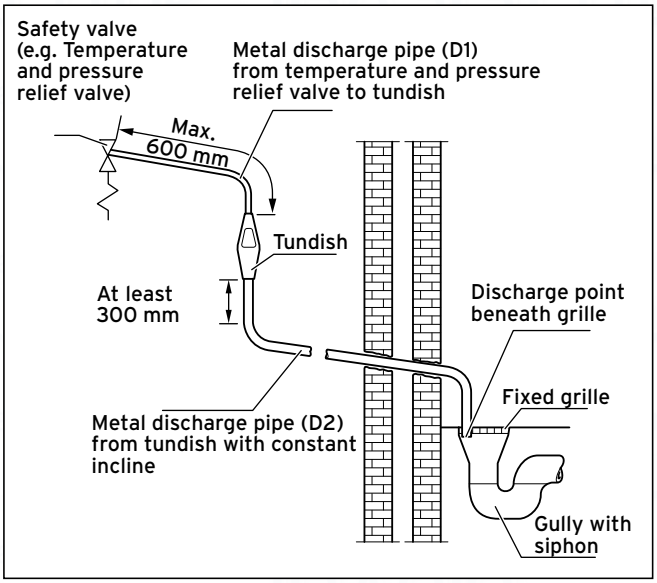

Fig. 5.5 Typical drainage installation

The discharge connections of the temperature and pressure relief valve and the expansion relief valve must be connected to the supplied tundish via 15 mm copper piping. The tundish should be mounted vertically, as close to the cylinder as possible and not more than 600 mm from the connection of the temperature and pressure relief valve. It must be mounted in the same room as the cylinder at a sufficient distance from the electrical components. The discharge pipes from the temperature and pressure relief valve and the expansion relief valve can be joined above the tundish using a T-piece.
The discharge pipe from the 22 mm connection of the tundish must be laid using copper piping with a diameter of at least 22 mm to a safe and visible discharge point. There must be a vertical section of pipe at least 300 mm long beneath the tundish before any bends or elbows in the pipework. If the total resistance of the discharge pipe exceeds the values specified in Tab. 5.1 below, you must increase the diameter of the piping. When installing the discharge piping, you must observe Directive G3 (➞ **section 2.2**).

Minimum diameter of discharge pipe (D2) from tundish	Maximum permissible total resistance, expressed as straight pipe length (without elbows or bends)	Resistance due to each elbow or bend
22 mm	up to 9 m	0.8 m
28 mm	up to 18 m	1.0 m
35 mm	up to 27 m	1.4 m

Tab. 5.1 Sizing of copper discharge pipe "D2" for G1/2 temperature and pressure relief valve outlet size

Worked example
The example below is for a G1/2 temperature relief valve with a discharge pipe (D2) having 4 No. 22 mm elbows and length of 7 m from the tundish to the point of discharge.

From Table 5.1:
Maximum resistance allowed for a straight length of 22 mm copper discharge pipe (D2) from a G1/2 temperature relief valve is: 9.0 m.
Subtract the resistance for 4 No. 22 mm elbows at 0.8 m each = 3.2 m
Therefore the maximum permitted length equates to: 5.8 m, which is less than the actual length of 7 m therefore calculate the next largest size.

Maximum resistance allowed for a straight length of 28 mm pipe (D2) from a G1/2 temperature relief valve is: 18 m.

Subtract the resistance of 4 No. 28 mm elbows at 1.0 m each = 4.0 m.

Therefore the maximum permitted length equates to: 14 m.
As the actual length is 7 m, a 28 mm (D2) copper pipe will be satisfactory.

A suitable place for the end of the discharge pipe is, for example, beneath a fixed grille above the odour seal in a gully with a siphon. Low discharge pipes, for example up to 100 mm above external surfaces such as car and other parking spaces, grasslands, etc. can be used provided that they are secured by a wire fence or something similar to prevent children from coming into contact with the waste water and provided that the system is not visible. You must not install any valves or stop cocks in the discharge pipe.

➤ Make sure that the discharge pipe from the tundish to the drain has a constant downward incline of at least 1:200.

The discharge pipe from the pressure relief valve of the Vaillant gas-fired wall-hung boiler can be connected to the horizontal discharge pipe of the cylinder behind the tundish using a T-piece.

5.4.2 High drain

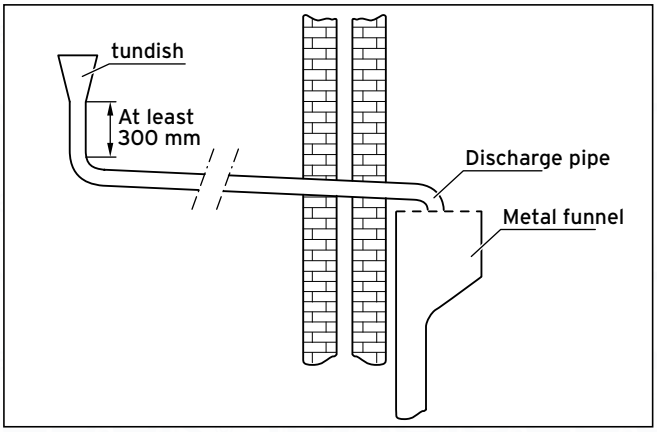

Fig. 5.6 High drain connection

The method illustrated in fig. 5.6 is allowed provided that no-one inside or outside the building is endangered by the discharge point.

Examples of points to consider when deciding whether a location is suitable for the high drain:
- The possibility (taking into account the effect of the wind) that a person might be located in the area where the water escapes, and, if this is the case, whether the water is sufficiently cooled by that point to pose no danger. Thermal conductivity of the structure's surface, climatic conditions and location and orientation of the discharge pipe may or may not have an effect on reducing the temperature of the discharge water.
- The position of windows and other openings.
- The probability of prams being parked under the drain.
- The resistance of the surface to hot water.
- The possibility of ice forming if the water is discharged onto paths.

5.5 Electrical installation

Danger!
Risk of death from electric shock!
Improperly executed electrical connections can impair the operational safety of the unit.
➤ The electrical installation may only be performed by a competent person approved at the time by the Health and Safety Executive.

Danger!
Risk of death from electric shock!
If the appliance is not earthed, life-threatening voltage can reach the piping and water draw-off points.
➤ The appliance must be earthed.

Wiring should be installed by a qualified, competent person in accordance with the building regulations, Part P of the current IEE regulations, and all other applicable regulations and directives.
You can use standard commercial cables (H05RR-F 3G1.5 or H05VV-F 3G1.5) for the wiring:
- Cross-section of conductors: 1.5 mm^2
- Torque for strain relief: 1,5 Nm
- Maximum length of bus cables: 300m

230 V supply lines and bus cables must be laid separately above lengths of 10 m.

The discharge pipes of the tundish, drain valves and motorised valves, etc. must be laid at a distance from electrical components.

5.5.1 Electrical connection of control components

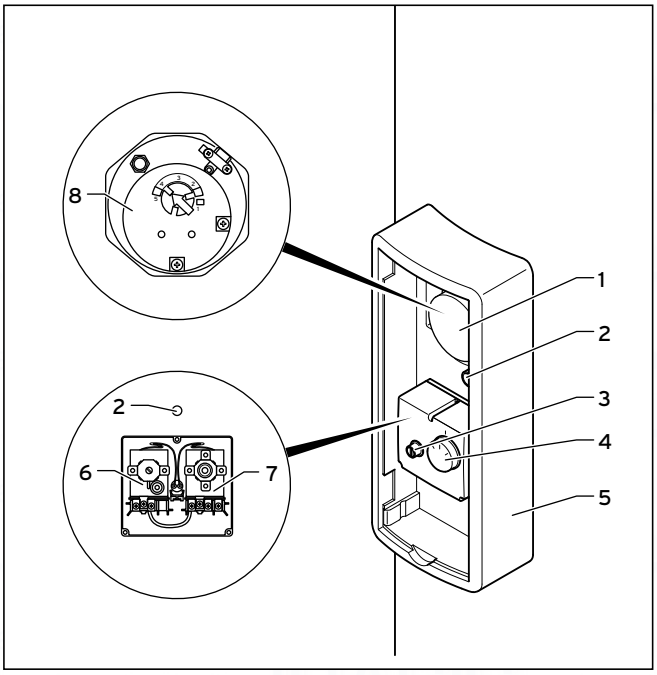

Fig. 5.7 Cylinder temperature control

Key
1 Electric immersion heater cover
2 Primary heating circuit immersion sleeve (NTC)
3 Cover cap for reset button for reheating circuit TCO
4 Primary heating circuit temperature controller
5 Casing
6 Primary heating circuit thermal cut-out
7 Cylinder thermostat
8 Electric immersion heater

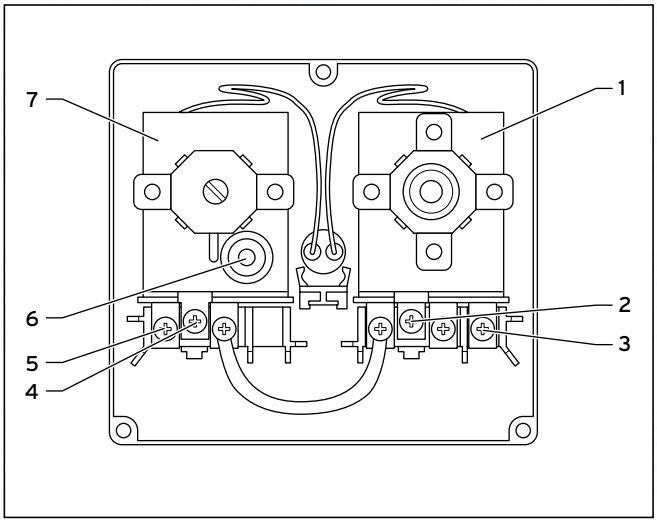

Fig. 5.8 Cylinder thermostat and thermal cut-out (TCO) for reheating circuit

Key
1 Cylinder thermostat
2 Cylinder thermostat protective earth terminal
3 Cylinder thermostat terminal 1
4 Primary heating circuit TCO protective earth terminal
5 Primary heating circuit TCO C terminal
6 Primary heating circuit TCO reset button
7 Primary heating circuit thermal cut-out (TCO)

Before wiring the control components, dismantle the casing (**5**) (→ **fig. 5.7**) to facilitate work on the components. When reinstalling the casing, use the cutouts in the casings for routing the cables.

5.5.2 Connecting up the electric immersion heater

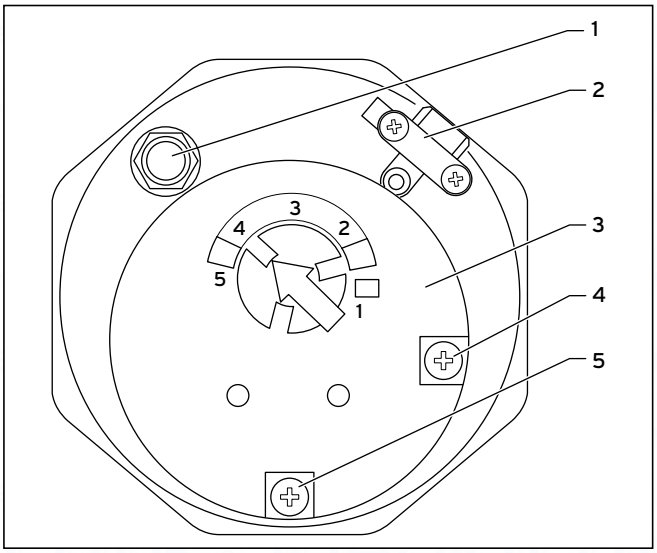

Fig. 5.9 Electrical connection of electric immersion heater

Key
1 Protective earth terminal (PE)
2 Cable grip
3 Electric immersion heater
4 Neutral conductor terminal (N)
5 Outer conductor terminal (L)

Danger!
Risk of death from electric shock!
Without potential equalisation, life-threatening voltage can reach the piping and water draw-off points.
➤ Earth the electric immersion heater.

Caution!
Corrosion and short circuits may occur due to incorrect earthing!
If you insert an electric immersion heater into the cylinder, the external voltage may build up electrical potential in the water which may result in the electrochemical corrosion of the electric immersion heater.
➤ Ensure that both the hot water and cold water pipes are connected to the earth line by means of an earth cable directly on the cylinder.
➤ You must also make sure that the electric immersion heater is connected to the earth line via the earthing terminal.

- Remove the top front cladding from the cylinder.
- Dismantle the electric immersion heater cover.
- Install a separate electrical power supply for the electric immersion heater in accordance with current IEE regulations (BS 7671).
  - Use heat-resistant cables (H05BN4-F 1.5 mm^2, 3-wire HOFR-coated flexible cable) for the cabling of the electric immersion heater.
  - Use the cable grip (**2**) to firmly secure the supply cable of the immersion heater.
  - Connect the electric immersion heater to the power mains via a double pole isolating switch with a contact separation of at least 3 mm in both poles.
  - Protect the circuit using a 13 A fuse.
- Mount the cover for the electric immersion heater.

Only switch the immersion heater on once the cylinder is completely full.

With the isolating switch, the electric immersion heater can be switched on if the reheating device has malfunctioned.

5.5.3 Options for combining control components

- For the installation, use the connection wiring diagram specified in Tab. 5.2 for the gas-fired wall-hung boiler and control components used.

Gas-fired wall-hung boiler used
eBUS-compatible gas-fired wall-hung boiler such as the Vaillant ecoTEC or non-eBUS-compatible gas-fired wall-hung boiler from Vaillant or a third-party manufacturer.

Wiring
Wiring via a Vaillant Control Centre and a Vaillant dual-channel eBUS controller as an eBUS system solution in order to be able to use a Vaillant dual-channel eBUS controller (low voltage) together with 230 V valves. You can set heating and hot water temperatures on the wall-mounted Vaillant dual-channel eBUS controller.
Alternative wiring via a standard wiring box and 230 V controller from a third-party manufacturer.

Control system of the heating circuits
The heating circuits can be controlled via Vaillant programmable room thermostats or weather compensators in conjunction with the Vaillant range of eBUS-compatible gas-fired wall-hung boilers. You can also use tested standard operating elements (see above).
For an overview of the combination options for these control components, see Tab. 5.2.

All wiring must be carried out in accordance with BS 7671: "Requirements for electrical installations" (IEE wiring regulations, current edition).

Regulation of cylinder reheating
The regulation of the reheating of the cylinder takes place via a Vaillant dual-channel eBUS controller or a timer (third-party manufacturer).

Gas-fired wall-hung boiler	Wiring via	Control system of the heating circuits	Regulation of cylinder reheating	Hydraulic plan	Connection wiring diagram
Vaillant ecoTEC, eBUS-compatible	Vaillant control centre	Vaillant dual-channel eBUS controller	Vaillant dual-channel eBUS controller with a Vaillant control centre	S plan	1 → fig. 5.10
Vaillant ecoTEC, eBUS-compatible	Vaillant control centre	Vaillant dual-channel eBUS controller	Vaillant dual-channel eBUS controller with a Vaillant control centre	Y plan	2 → fig. 5.11
Non-eBUS-compatible boiler from a third-party manufacturer	Standard cabling box	Programmable timer and room thermostat	230 V timer and standard wiring box	S or Y plan	6 → fig. 5.12

Tab. 5.2 Options for combining control components

spares & parts online IBASIS.CO.UK

5.5.4 Installing the control components in accordance with the connection wiring diagrams

Connection wiring diagram 1 (S plan)

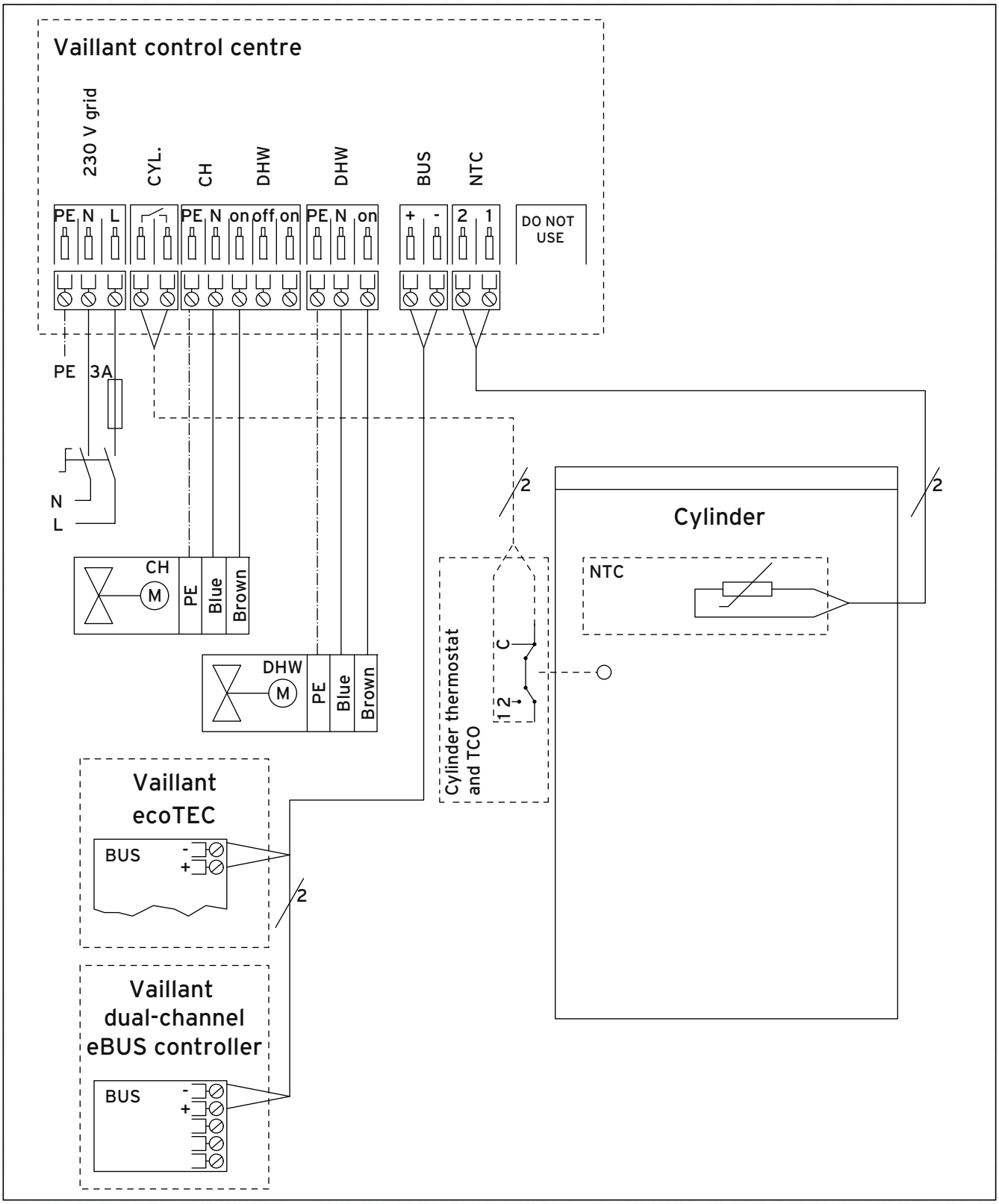

Fig. 5.10 Connection wiring diagram 1

- eBUS-compatible Vaillant gas-fired wall-hung boiler
- Wiring via Vaillant control centre
- Primary heating circuit control via Vaillant dual-channel eBUS controller
- Room heating control via Vaillant dual-channel eBUS controller
- S plan

If you use a 230 V controller from a third-party manufacturer, you must connect the cylinder thermostat and TCO to the Vaillant Control Centre. This is not required with a Vaillant eBUS system solution.

➤ Next to the domestic hot water cylinder, install the Vaillant control centre.
➤ Dismantle the cover of the Vaillant control centre.

The terminals **NTC** and CYL. of the Vaillant control centre may not be connected at the same time.

Option 1: Temperature sensor (NTC) on Vaillant control centre:
➤ Insert the VR 10 temperature sensor delivered with the Vaillant control centre into the immersion sleeve (**2 → fig. 5.7**)
for the reheating circuit (NTC).
➤ Connect the temperature sensor (NTC) to the terminal **NTC** of the Vaillant control centre.

Option 2: Cylinder thermostat to Vaillant control centre:
➤ Dismantle the cover of the cylinder thermostat (**7 → fig. 5.7**).
➤ Connect the terminals **1** (cylinder thermostat) (**3 → fig. 5.8**) and **C** (reheating circuit TCO) (**5 → fig. 5.8**) to the terminal **CYL.** of the Vaillant control centre.
➤ Mount the cover for the cylinder thermostat.

The electrical installation of the eBUS connection is described in the installation instructions for the Vaillant dual-channel eBUS controller.
➤ Install the eBUS connection from the gas-fired wall-hung boiler to the Vaillant control centre.
➤ Install the eBUS connection from the gas-fired wall-hung boiler to the Vaillant dual-channel eBUS controller.

The electrical installation of the zone valves is described in the installation instructions for the Vaillant control centre.
➤ Connect the zone valves for the heating circuit and hot water circuit in accordance with connection diagram 1 (S plan hydraulics).
➤ Install the mains connection cable for the Vaillant control centre.
➤ Mount the covers of the Vaillant control centre.
➤ Connect the gas-fired wall-hung boiler and the Vaillant control centre to the power mains.
➤ Adjust the Vaillant dual-channel eBUS controller in accordance with its operating and installation instructions.

Connection wiring diagram 2 (Y plan)

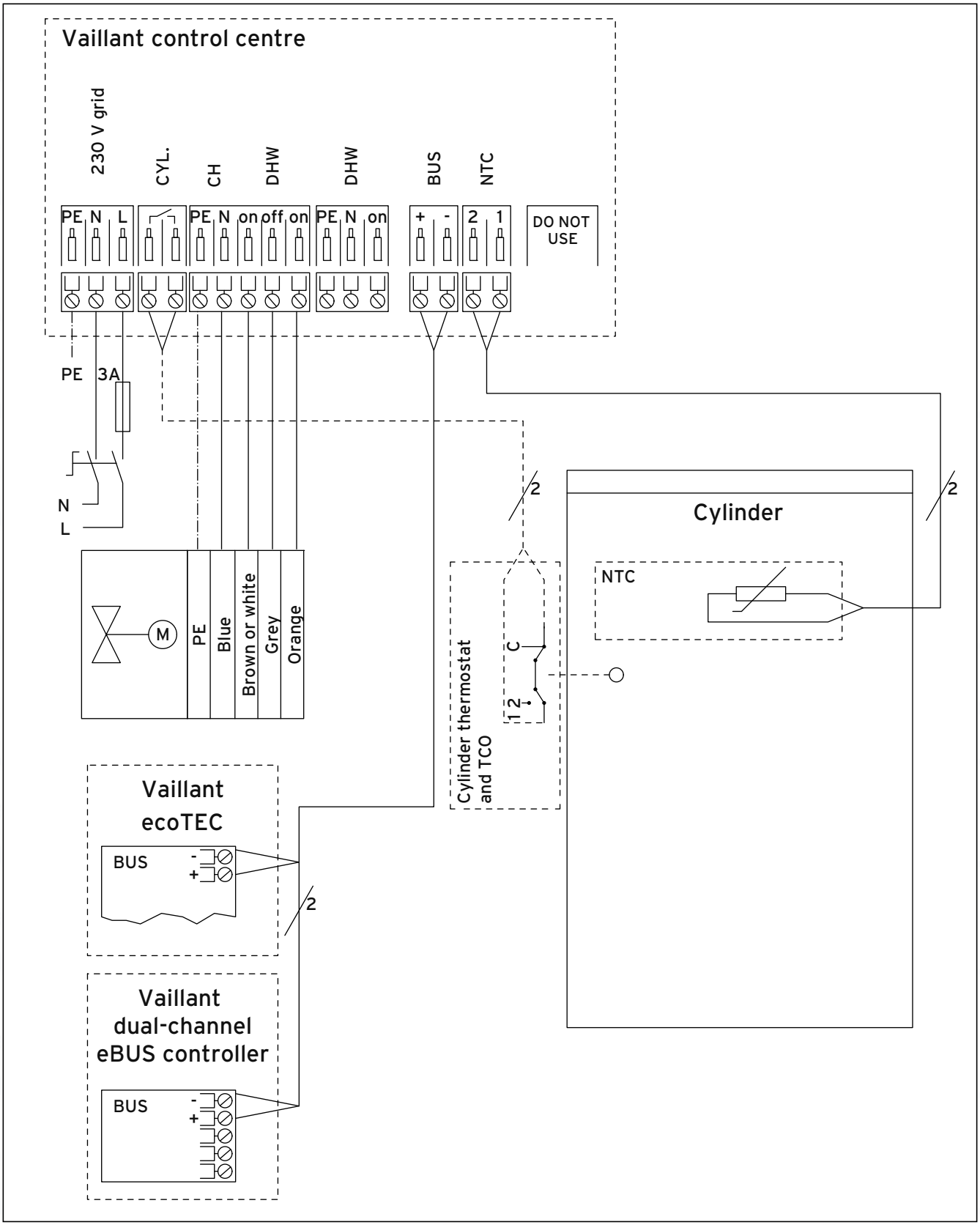

Fig. 5.11 Connection wiring diagram 2

- eBUS-compatible Vaillant gas-fired wall-hung boiler
- Wiring via Vaillant control centre
- Primary heating circuit control via Vaillant dual-channel eBUS controller
- Room heating control via Vaillant dual-channel eBUS controller
- Y plan

If you use a 230 V controller from a third-party manufacturer, you must connect the cylinder thermostat and TCO to the Vaillant Control Centre. This is not required with a Vaillant eBUS system solution.

This type of installation is only permissible for boilers which comply with G3

➤ Next to the domestic hot water cylinder, install the Vaillant control centre.
➤ Dismantle the cover of the Vaillant control centre.

The terminals **NTC** and **CYL**. of the Vaillant control centre may not be connected at the same time.

Option 1: Temperature sensor (NTC) on Vaillant control centre:
➤ Insert the VR 10 temperature sensor delivered with the Vaillant control centre into the immersion sleeve (**2 → fig. 5.7**)
for the reheating circuit (NTC).
➤ Connect the temperature sensor (NTC) to the terminal **NTC** of the Vaillant control centre.

Option 2: Cylinder thermostat to Vaillant control centre:
➤ Dismantle the cover of the cylinder thermostat (**7 → fig. 5.7**).
➤ Connect the terminals **1** (cylinder thermostat) (**3 → fig. 5.8**) and **C** (reheating circuit TCO) (**5 → fig. 5.8**) to the terminal **CYL.** of the Vaillant control centre.
➤ Mount the cover for the cylinder thermostat.

The electrical installation of the eBUS connection is described in the installation instructions for the Vaillant dual-channel eBUS controller.
➤ Install the eBUS connection from the gas-fired wall-hung boiler to the Vaillant control centre.
➤ Install the eBUS connection from the gas-fired wall-hung boiler to the Vaillant dual-channel eBUS controller.

The electrical installation of the zone valves is described in the installation instructions for the Vaillant control centre.

➤ Connect the 3-way valve for the heating circuit and hot water circuit in accordance with connection diagram 2 (Y plan hydraulics).

➤ Install the mains connection cable for the Vaillant control centre.
➤ Mount the covers of the Vaillant control centre.
➤ Connect the gas-fired wall-hung boiler and the Vaillant control centre to the power mains.
➤ Adjust the Vaillant dual-channel eBUS controller in accordance with its operating and installation instructions.

Connect the cylinder to the standard cabling box (S plan or Y plan hydraulics)
The cylinder thermostat can be connected to S plan or Y plan hydraulics by means of standard cabling.

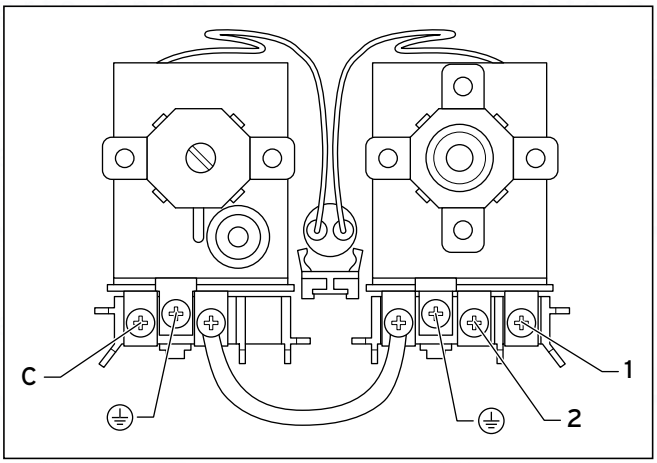

Fig. 5.12 Connections of the cylinder thermostat and the thermal cut-out

6 Commissioning

6.1 Flushing the reheating circuit

Detailed recommendations for the water circuit can be found in BS 6798 and BS 5449: Part 1 (for central heating systems with both small and the smallest pipe width).
Pipes which do not form part of the usable heating surface must be insulated in order to prevent heat losses and possible freezing. Pipe insulation is particularly important if you are installing pipes under the roof or in open areas under the floor.
Discharge valves must be mounted in easily accessible locations, so that the entire system, including the boiler and hot water system, can be discharged. Discharge valves must have a nominal size of 1/2 inch BSP and comply with BS 2879.
Copper pipes which comply with BS 2871: Part 1 for water-carrying pipes must be used. All soldered connections in the private hot water pipe system must be made with lead-free soldering material.

Caution!
Risk of material damage as a result of deposits in the unit or system!
Cleaning agents can result in deposits and follow-on damages.
- ➤ Use a suitable cleaning agent in accordance with this instruction manual.
- ➤ Never leave cleaning agents in the system for longer than 24 hours.
- ➤ Completely remove the cleaning agents from the system by flushing it thoroughly.

All cleaning must be performed before installing the new boiler and must comply with BS 7593. Information on the use of cleaning agents for the system can be obtained from Sentinel, Betz Dearborn Ltd. Widnes, Cheshire, WA8 8UD. Tel: 0151 420 9595, or Fernox, Alpha Fry Technologies, Tandem House, Marlow Way, Croydon, CR0 4XS. Tel: 0870 8700362.

6.2 Water treatment

Caution!
Risk of material damage due to unsuitable water!
Unsuitable water can lead to deposits and corrosion damage in the cylinder and in the hot water circuit.
- ➤ Use only potable water with a chloride content of below 250 mg/l in the hot water circuit.

Caution!
Risk of material damage as a result of enriching the heating water with unsuitable frost or corrosion protection agents!
Frost and corrosion protection agents can cause changes to the seals, noises during heating mode and possibly subsequent damage.
- ➤ Do not use any unsuitable frost and corrosion protection agents.

Mixing additives with the heating water can result in material damage. However no incompatibility with Vaillant units has been detected with proper use of the following products over a long period.
- ➤ When using additives, follow the manufacturer's instructions without exception.

Vaillant does not accept any liability relating to the compatibility or efficiency of any additives throughout the heating system

Additives for cleaning measures (subsequent flushing required)
- Fernox F3
- Sentinel X 300
- Sentinel X 400

Additives intended to remain permanently in the system
- Fernox F1
- Fernox F2
- Sentinel X 100
- Sentinel X 200

Additives for frost protection intended to remain permanently in the system
- Fernox Antifreeze Alphi 11
- Sentinel X 500

- Inform the operator of the necessary measures if you have used these additives.
- Inform the operator about the required measures for frost protection.

- Observe all valid national and technical regulations when treating the filling and supplementary water.

Provided the national regulations and technical standards do not stipulate more stringent requirements, the following applies:

- You must treat the heating water in the following cases:
  - If the entire filling and supplementary water quantity during the operating life of the system exceeds three times the nominal volume of the heating system or
  - If the limit values shown in the tables are not observed.

Total heating output	Overall hardness at smallest boiler heating surface[2)]		
	20 l/kW	> 20 l/kW < 50 l/kW	> 50 l/kW
kW	mol/m³	mol/m³	mol/m³
> 50	No requirement or > 3[1)]	2	0,02
> 50 bis ≤ 200	2	1,5	0,02
> 200 bis ≤ 600	1,5	0,02	0,02
> 600	0,02	0,02	0,02

1) For systems with circulation water heaters and for systems with electric heating elements

2) Of specific system volume (nominal content in litres/heating output; in the case of multi-boiler systems, the smallest single heating output is to be used).
These values only apply up to 3 times the system volume for filling and supplementary water. Once this triple system volume is exceeded, the water will have to be treated exactly the same as in case of exceeding the limit values given in Table 6.1 (softening, desalination,hardness stabilisation and desludging).

Table 6.1 Guidelines for the heating water: Water hardness

Heating water characteristics	Unit	Low-salt	Saline
Electrical conductivity at 25 °C	µS/cm	< 100	100 - 1500
Appearance		Free from sedimentary materials	
pH value at 25 °C		8,2 - 10,0	8,2 - 10,0
Oxygen	mg/l	< 0.1	< 0.02

Table 6.2 Guidelines for the heating water: Salt content

6.3 Filling the cylinder

Use the draw-off points to vent the cylinder and water pipes. Do not use the combined temperature/pressure relief valve of the cylinder or the pressure relief valve of the cold water safety assembly for venting, since foreign bodies can contaminate or damage the valves.

- Make sure that the drain valve is closed.
- Open all of the draw-off points in the cold and hot water pipes.
- Open the water supply inlet to the cylinder and allow the water to run until bubble-free water runs from all of the draw-off points and the air is removed from the system.
- Close all of the draw-off points.
- Check the system for leaks.
  In particular, check the installed electric immersion heater for leaks.
- Open two hot water draw-off points, one at the lowest point and one at the highest point of the pipe system, and allow water to run for at least 5 minutes.
- Close both of the hot water draw-off points.

6.4 Filling the central heating system

The system can be filled using the built-in filling loop (ecoTEC plus combi boiler only) or via a separate filling connection that is fitted at an easily accessible location in the heating circuit. The filling loop must be removed once filling is complete. If a temporary connection is not possible due to legal regulations, a closed system filling pump with a buffer tank must be used.
The heating system is not automatically supplied from the hot water side of the central heating. Alternative procedures for filling closed systems can be found in BS 5449.

Do not use the pressure relief valve of the gas-fired wall-hung boiler for venting.

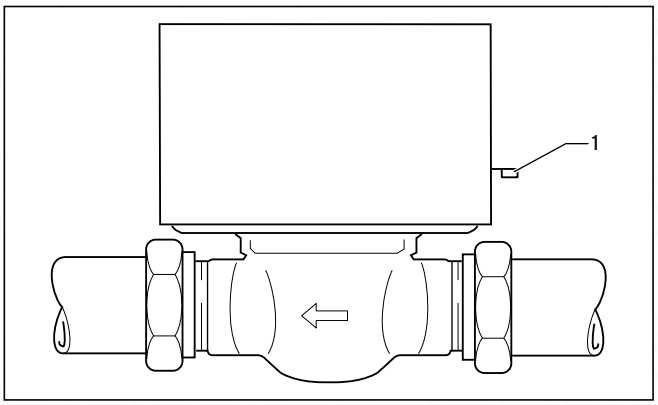

Fig. 6.1 Two port motorised valve

- Place the lever (**1**) on the two port motorised valve to "MAN OPEN" and lock it into this position.
- Flush the entire primary central heating system including the reheating circuit with cold and hot water.
- Flush, fill, and vent the central heating system in accordance with the installation instructions of the gas-fired wall-hung boiler.
- Release the lever on the two port motorised valve by placing it in the "AUTO" position.

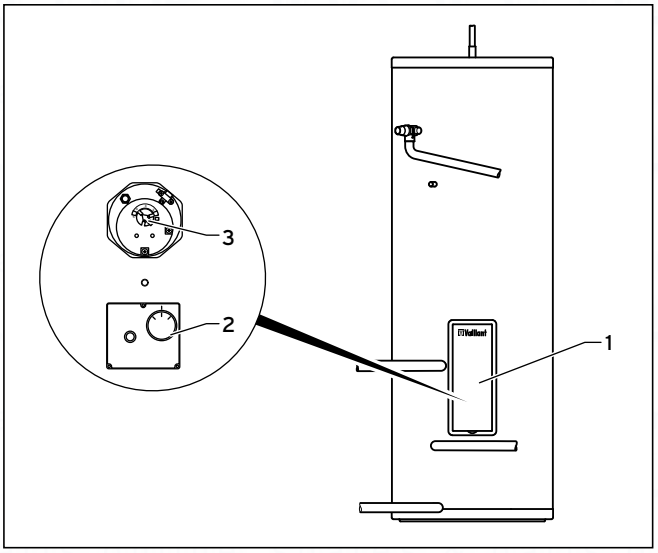

Fig. 6.2 Setting thermostats

- Remove the front cladding (**1**) from the cylinder.
- Dismantle the electric immersion heater cover.
- Set the cylinder thermostat (**2**) and the electric immersion heater thermostat (**3**) to 60°C for initial commissioning.
- Commission the gas-fired wall-hung boiler (→ **section 6.5**) until the cylinder reaches the operating temperature and all radiators in the system are hot.
- Then drain the entire central heating system again to remove any residue from the pipes.
- Fill and vent the entire central heating system again as described in the installation instructions for the gas-fired wall-hung boiler.

6.5 Commissioning the gas-fired wall-hung boiler

- Make sure that the control device and thermostats are set so that heating is required.
- Carry out the commissioning and testing measures for the gas-fired wall-hung boiler in accordance with the installation instructions.
- Check whether the gas-fired wall-hung boiler starts operating and the water in the cylinder and radiators heats up in accordance with the hot water and room thermostat settings.
- Following completion of the commissioning procedure, use the controller to set the hot water temperature to a maximum of 60°C in order to achieve the highest degree of energy efficiency. If you are controlling the hot water temperature via the cylinder thermostat installed in the cylinder, switch the cylinder thermostat (**2**) on. Set the electric immersion heater thermostat (**1**) to the required temperature.
- Reattach the cover for the electric immersion heater and the upper front cladding of the cylinder.
- Regulate the hot water thermostat mixer via the adjusting knob to maintain the required temperature on the hot water taps.

6.6 Filling in the cylinder commissioning checklist

- Fill in the benchmark cylinder commissioning checklist located on the last few pages of these instructions.

6.7 Handover to the operator

You must brief the operator of the unit on the handling and function of the cylinder.

- Provide the operator with all relevant instructions and unit documentation.
- Go through the operating instructions with the operator and answer any questions.
- Draw special attention to the safety instructions which the operator must follow.
- Inform the operator of the necessity of ensuring the regular inspection/maintenance of the system (inspection and maintenance contract).
- Make the operator aware that the instructions must be kept near to the cylinder and must be accessible to anyone working on the cylinder.
- Inform the operator of the correct (efficient) settings for temperatures, controllers, and thermostatic radiator valves.
- Explain to the operator how to safely use the cylinder and control devices.
- Inform the operator of the required precautionary measures to prevent damage to the system and building if the system is not kept in operation during frost.
- In addition, inform the operator that the electric immersion heater is intended as a reserve appliance for water heating and must not be used to heat water in the cylinder at the same time as the gas-fired wall-hung boiler.

In regions with hard water, the set hot water temperature must not exceed 60 °C to avoid scaling.

For more information, contact Vaillant customer service.

7 Inspection and maintenance

Regular inspections and maintenance of the cylinder by a competent person approved at the time by the Health and Safety Executive are a prerequisite for long-lasting operational readiness, reliability and a long working life. The operational reliability of the cylinder may be impaired and material damage and personal injuries may result if the inspection and maintenance work is not carried out.

The essential maintenance work on the cylinder and the corresponding maintenance intervals are specified in the table below.

Servicing
After servicing, the servicing engineer must complete the relevant Service Interval Record section of the Benchmark Checklist located on the inside back pages of this document.

Procuring spare parts
If you require spare parts for maintenance or repair work, you must use only Vaillant genuine spare parts. The original components of the unit were also certified as part of the CE declaration of conformity. If you do not use certified Vaillant genuine spare parts, this voids the CE conformity of the unit. We therefore strongly recommend that you fit Vaillant genuine spare parts.

Replacement parts
An overview of the available genuine Vaillant spare parts can be obtained:
- From your parts wholesaler.
- Alternatively contact Spares Technical Enquiries on 01773 596615
  or via email: technicalspares@groupservice.co.uk

Maintenance work on	Maintenance interval
Cylinder	
Check all connections to ensure that there are no leaks.	Annually
Check the temperature and pressure relief valve.	Annually
Check the expansion relief valve.	Annually
Check the charge pressure of the hot water expansion vessel.	Annually
Check water flow rates are correct (check and clean filters as necessary)	Annually
Ensure set temperatures are correct	Annually
Check the charge pressure of the expansion vessel, re-pressurise as necessary	Annually
Fill in the service section of the Benchmark cylinder commissioning checklist.	Annually

Tab. 7.1 Maintenance checklist

7.1 Checking the temperature and pressure relief valve and expansion relief valve

- Open each valve manually by turning the valve cap and check whether water is able to flow to the drain via the tundish without obstruction. Make sure that both valves sit correctly in their idle position.

7.2 Checking the charge pressure of the expansion vessel

- Shut off the water supply pipe and open the nearest hot water draw-off point to discharge the pressure from the secondary water system.
- Use a pressure gauge to check the expansion vessel pressure at the measuring point. If the pressure is below 3.0 bar, increase it using a suitable air pump.
- Fill in the maintenance section of the commissioning report.

7.3 Draining the cylinder

- Close the cold water supply pipe.
- Secure a hose to the drain valve.
- Place the free end of the hose in a suitable discharge position. The opening should be around 1 m beneath the cylinder.
- Open the highest hot water draw-off point to reduce the pressure and vent the water pipes, thus draining them completely.
- Open the cylinder drain valve and leave open until no more water escapes and the cylinder is completely empty.
- Once the water has drained out, close the hot water draw-off point and the drain valve.
- Remove the hose from the drain valve.

8 Fault finding

The tables below provide information on possible faults which can occur when the cylinder is being operated along with information on their causes and how to rectify them.
All work on the Vaillant cylinder (installation, maintenance, repairs etc.) may only be performed by competent persons.

Danger!
Risk of death from electric shock!
Improperly executed work on the cylinder can result in a risk to life and limb.
- Faults may only be eliminated by a competent person approved at the time by the Health and Safety Executive.

Caution!
Risk of damage due to overheating!
Not all electric immersion heaters have a thermal cut-out.
- Use only Vaillant Ltd. electric immersion heaters with a thermal cut-out as replacement parts.

When replacing parts, use only original replacement parts from Vaillant Ltd.

We recommend entering into a maintenance agreement.

Fault	Cause	Remedy
The cylinder cools down at night.	One-pipe circulation in the case of short tube networks with low pressure loss.	Install a non-return valve (as close as possible to the cylinder).
Primary heating is not working. The gas-fired wall-hung boiler runs for a short time, goes off, and then comes back on again. This is repeated until the cylinder is at its target temperature.	1. Air in the reheating heat exchanger.	Vent the reheating heat exchanger.
	2. Heat exchanger surface area too small.	Compare the data provided by the boiler manufacturer with the data for the cylinder. It may be possible to solve the problem by setting a higher flow temperature on the gas-fired wall-hung boiler.
Only cold or lukewarm water comes out of the draw-off points.	1. The cold and hot water draw offs on the cylinder have been mixed up.	Turn off the cold water supply, then let water flow out via the hot water draw off. Only a few litres of water flow out if the connection is set up correctly. The hot water withdrawal pipe intake is then in the air space and further draining is not possible. If it is possible to empty the entire cylinder via the hot water draw off, the connections have been laid incorrectly. Change the connections!
	2. Hot water thermostat mixer set too low.	Increase the setting.
	3. Heating insufficient; gas-fired wall-hung boiler does not reheat. External control device faulty. Air in the reheating heat exchanger. Cylinder sensor faulty.	Check whether the gas-fired wall-hung boiler is working. Check whether the external control device is working. Check that the two port valve is in the DHW position. Replace the two port valve. Vent the reheating heat exchanger. Check the thermal cut-out and repair the fault. Replace the cylinder thermostat.
Water flows out of the expansion relief valve (only when heating up).	Dirt on the valve seat of the expansion relief valve.	Check the seat of the expansion relief valve and repair the fault.
	Pressure reducing valve faulty.	Check whether the pressure behind the pressure reducing valve is lower than 3.0 bar. If so, replace the pressure reducing valve.
	Expansion vessel faulty.	Check the pressure in the expansion vessel. If the pressure is insufficient, re-establish the pressure and check whether the expansion vessel maintains it.
	Expansion relief valve faulty.	If the pressure is normal, replace the expansion relief valve.
Water flows out of the temperature and pressure relief valve (only when heating up).	Dirt on the valve seat of the temperature and pressure relief valve.	Check the seat of the temperature and pressure relief valve and repair the fault.
	The temperature control system for the gas-fired wall-hung boiler is faulty.	If water is only escaping when being heated up by the gas-fired wall-hung boiler, check the temperature control system of the gas-fired wall-hung boiler. Check whether the two port valve switches to the heating position when the cylinder temperature is reached.
	Cylinder sensor faulty.	Check the cylinder sensor and corresponding thermal cut-out, replace the cylinder sensor if necessary, and repair the thermal cut-out fault.
	Temperature and pressure relief valve faulty.	If water is only escaping when being heated up by the electric immersion heater, replace the temperature and pressure relief valve.
	Electric immersion heater faulty.	Check the temperature sensor of the electric immersion heater and the corresponding thermal cut-out and replace the electric immersion heater if necessary.

Table 8.1 Troubleshooting

9 Taking the cylinder out of service

9.1 Temporarily taking the cylinder out of service

Caution!
Risk of damage as a result of the cylinder freezing!
Frost protection and monitoring devices are only active while the boiler is connected up to the power supply.
- ➤ Make sure that the cylinder cannot be damaged if there is a frost.

- ➤ Temporarily take the cylinder out of service by switching the boiler off.

9.2 Permanently taking the cylinder out of service

Danger!
Risk of death from electric shock from live connections!
There is continuous voltage present on the mains connection terminals of the boiler.
- ➤ Interrupt the power supply.
- ➤ Prevent the power supply from being switched on again.
- ➤ Ensure that any electrical work is carried out by a qualified competent person.

- ➤ Switch the boiler off.
- ➤ Drain the cylinder (→ **section 7.3**).
- ➤ Dismantle the hydraulic connections.
- ➤ Dismantle the temperature sensor.
- ➤ Remove the wiring for the temperature sensor from the boiler or external controller.

10 Recycling and disposal

Both the cylinder and its transport packaging are made primarily of recyclable raw materials.

10.1 Cylinder disposal

You must not dispose of the cylinder or any of its accessories in normal domestic rubbish.
- ➤ Dispose of the old unit and any accessories properly and in accordance with national regulations.

10.2 Disposal of packaging

The heating specialist company which installs the unit is responsible for disposing of the transport packaging.
- ➤ Observe national regulations.

11 Customer service and manufacturer's guarantee

7.1 Vaillant service

To ensure regular servicing, it is strongly recommended that arrangements are made for a Maintenance Agreement. Please contact Vaillant Service Solutions (0870 6060 777) for further details.

7.2 Vaillant guarantee

Vaillant provides a full parts and labour guarantee for this appliance for the duration as shown on the enclosed registration card which must be fully completed and returned within 30 days of installation. All appliances must be installed by a suitably competent person fully conversant and in accordance with all current regulations applicable to the appliance type installation. In the case of gas appliances the Gas Safety (Installation and Use) Regulations 1998, and the manufacturer's instructions. In the UK competent persons approved at the time by the Health and Safety Executive undertake the work in compliance with safe and satisfactory standards.
Installers should also be fully conversant with and competent with all necessary electrical and building regulations that may apply to the installation.
In addition all unvented domestic hot water cylinders must be installed by a competent person to the prevailing building regulations at the time of installation (G3).
All appliances shall be fully commissioned in accordance with our installation manual and Benchmark commissioning check list (this will be included within the installation manual). These must be signed and given to the user for safe keeping during the hand over process.
Installers should also at this time advise the user of the annual servicing requirements and advise of appropriate service agreement.
Terms and conditions do apply to the guarantee, details of which can be found on the registration card included with this appliance. In order to qualify for guarantee after one year the appliance must be serviced in accordance with our installation manual servicing instructions. The benchmark service history should be completed.
Note - all costs associated with this service are excluded from this guarantee.
Failure to install and commission this appliance in compliance with the manufacturer's instructions will invalidate the guarantee (this does not affect the customer's statutory rights).

Commissioning checklist and service record

MAINS PRESSURE HOT WATER STORAGE SYSTEM COMMISSIONING CHECKLIST

This Commissioning Checklist is to be completed in full by the competent person who commissioned the storage system as a means of demonstrating compliance with the appropriate Building Regulations and then handed to the customer to keep for future reference.

Failure to install and commission this equipment to the manufacturer's instructions will invalidate the warranty but does not affect statutory rights.

Customer Name ______________________ Telephone Number ______________

Address ______________________

Cylinder Make and Model ______________________

Cylinder Serial Number ______________________

Commissioned by *(print name)* ______________________ Registered Operative ID Number ______________

Company Name ______________________ Telephone Number ______________

Company Address ______________________

______________________ Commissioning Date ______________

To be completed by the customer on receipt of a Building Regulations Compliance Certificate*:

Building Regulations Notification Number *(if applicable)* ______________________

ALL SYSTEMS PRIMARY SETTINGS (indirect heating only)

Is the primary circuit a sealed or open vented system?		Sealed ☐	Open ☐
What is the maximum primary flow temperature?			☐ °C

ALL SYSTEMS

What is the incoming static cold water pressure at the inlet to the system?			☐ *bar*
Has a strainer been cleaned of installation debris (if fitted)?		Yes ☐	No ☐
Is the installation in a hard water area (above 200ppm)?		Yes ☐	No ☐
If yes, has a water scale reducer been fitted?		Yes ☐	No ☐
What type of scale reducer has been fitted?			
What is the hot water thermostat set temperature?			☐ °C
What is the maximum hot water flow rate at set thermostat temperature (measured at high flow outlet)?			☐ *l/min*
Time and temperature controls have been fitted in compliance with Part L of the Building Regulations?			Yes ☐
Type of control system (if applicable)	Y Plan ☐	S Plan ☐	Other ☐
Is the cylinder solar (or other renewable) compatible?		Yes ☐	No ☐
What is the hot water temperature at the nearest outlet?			☐ °C
All appropriate pipes have been insulated up to 1 metre or the point where they become concealed			Yes ☐

UNVENTED SYSTEMS ONLY

Where is the pressure reducing valve situated (if fitted)?		
What is the pressure reducing valve setting?		☐ *bar*
Has a combined temperature and pressure relief valve and expansion valve been fitted and discharge tested?	Yes ☐	No ☐
The tundish and discharge pipework have been connected and terminated to Part G of the Building Regulations		Yes ☐
Are all energy sources fitted with a cut out device?	Yes ☐	No ☐
Has the expansion vessel or internal air space been checked?	Yes ☐	No ☐

THERMAL STORES ONLY

What store temperature is achievable?	☐ °C
What is the maximum hot water temperature?	☐ °C

ALL INSTALLATIONS

The hot water system complies with the appropriate Building Regulations	Yes ☐
The system has been installed and commissioned in accordance with the manufacturer's instructions	Yes ☐
The system controls have been demonstrated to and understood by the customer	Yes ☐
The manufacturer's literature, including Benchmark Checklist and Service Record, has been explained and left with the customer	Yes ☐

Commissioning Engineer's Signature ______________________

Customer's Signature ______________________

(To confirm satisfactory demonstration and receipt of manufacturer's literature)

*All installations in England and Wales must be notified to Local Authority Building Control (LABC) either directly or through a Competent Persons Scheme. A Building Regulations Compliance Certificate will then be issued to the customer.

benchmark COLLECTIVE MARK
THE MARK OF QUALITY FOR THE INSTALLATION, COMMISSIONING AND SERVICING OF DOMESTIC HEATING AND HOT WATER SYSTEMS

©Heating and Hotwater Industry Council (HHIC)

SERVICE RECORD

It is recommended that your hot water system is serviced regularly and that the appropriate Service Record is completed.

Service Provider

Before completing the appropriate Service Record below, please ensure you have carried out the service as described in the manufacturer's instructions.

SERVICE 1 Date

Engineer Name

Company Name

Telephone Number

Comments

Signature

SERVICE 2 Date

Engineer Name

Company Name

Telephone Number

Comments

Signature

SERVICE 3 Date

Engineer Name

Company Name

Telephone Number

Comments

Signature

SERVICE 4 Date

Engineer Name

Company Name

Telephone Number

Comments

Signature

SERVICE 5 Date

Engineer Name

Company Name

Telephone Number

Comments

Signature

SERVICE 6 Date

Engineer Name

Company Name

Telephone Number

Comments

Signature

SERVICE 7 Date

Engineer Name

Company Name

Telephone Number

Comments

Signature

SERVICE 8 Date

Engineer Name

Company Name

Telephone Number

Comments

Signature

SERVICE 9 Date

Engineer Name

Company Name

Telephone Number

Comments

Signature

SERVICE 10 Date

Engineer Name

Company Name

Telephone Number

Comments

Signature

spares & parts online IBASIS.CO.UK

Supplier

Vaillant Ltd
Nottingham Road ▮ Belper ▮ Derbyshire ▮ DE56 1JT
Telephone 0845 602 2922 ▮ www.vaillant.co.uk ▮ info@vaillant.co.uk

Manufacturer

Vaillant GmbH
Berghauser Str. 40 ▮ D-42859 Remscheid ▮ Telefon 0 21 91/18-0
Telefax 0 21 91/18-28 10 ▮ www.vaillant.de ▮ info@vaillant.de

0020111105_02 GBIE 022012 – Subject to change