For the competent person

Installation and maintenance instructions

ecoCRAFT exclusive

VKK GB ..6/3-E R1

GB, IE

Publisher/manufacturer
Vaillant GmbH
Berghauser Str. 40 ▮ D-42859 Remscheid
Tel. +49 21 91 18-0 ▮ Fax +49 21 91 18-2810
info@vaillant.de ▮ www.vaillant.de

spares & parts online IBASIS.CO.UK

Contents

1 Safety ... 4
1.1 Action-related warnings ... 4
1.2 Intended use ... 4
1.3 General safety information ... 4
1.4 Regulations (directives, laws, standards) ... 6
2 Notes on the documentation ... 7
2.1 Observing other applicable documents ... 7
2.2 Storing documents ... 7
2.3 Applicability of the instructions ... 7
2.4 System logbook ... 7
3 Product description ... 7
3.1 Serial number ... 7
3.2 Information on the identification plate ... 7
3.3 Product design ... 7
3.4 Benchmark ... 8
3.5 CE label ... 9
4 Set-up ... 9
4.1 Checking the scope of delivery ... 9
4.2 Unpacking the product ... 9
4.3 Installation site ... 9
4.4 Transporting the product to the installation site ... 9
4.5 Product dimensions and connection dimensions ... 9
4.6 Minimum clearances and installation clearances ... 10
4.7 Aligning the product ... 10
4.8 Opening the front flap ... 10
4.9 Removing/installing the front casing ... 10
4.10 Removing/installing the upper casing and side sections of the casing ... 10
5 Installation ... 11
5.1 Preparing for installation ... 11
5.2 Required accessories (on-site) ... 11
5.3 Performing the gas installation ... 11
5.4 Installing hydraulics ... 12
5.5 Connecting the condensate drain pipework ... 12
5.6 Installing and connecting the flue pipe ... 12
5.7 Electrical installation ... 13
6 Operation ... 15
6.1 Operating concept of the product ... 15
6.2 Calling up the installer level ... 15
6.3 Checking the status codes ... 15
7 Start-up ... 15
7.1 Servicing tools ... 15
7.2 Carrying out the initial start-up ... 15
7.3 Function menu ... 15
7.4 Calling up the check programmes ... 15
7.5 Reading off the filling pressure ... 16
7.6 Preventing low water pressure ... 16
7.7 Checking and treating the heating water/filling and supplementary water ... 16
7.8 Filling and purging the heating installation ... 17
7.9 Filling the condensate siphon ... 17
7.10 Checking and adjusting the gas ratio setting ... 18
7.11 Checking that the product functions correctly and checking the leak-tightness ... 19
8 Adapting the unit to the heating installation ... 20
8.1 Calling up diagnostics codes ... 20
8.2 Setting the maximum flow temperature ... 21
8.3 Setting the pump overrun and pump operating mode ... 21
8.4 Setting the burner anti-cycling time and partial load ... 21
8.5 Start-up behaviour ... 21
8.6 Handing the product over to the operator ... 21
9 Inspection and maintenance ... 22
9.1 Observing inspection and maintenance intervals ... 22
9.2 Procuring spare parts ... 22
9.3 Checking the CO/CO_2 ratio ... 22
9.4 Adjusting the CO/CO_2 ratio ... 23
9.5 Removing the burner assembly ... 24
9.6 Cleaning the combustion chamber ... 24
9.7 Cleaning the burner ... 24
9.8 Installing the burner assembly ... 24
9.9 Replacing electrodes ... 25
9.10 Cleaning the condensate collector ... 25
9.11 Cleaning the condensate siphon ... 26
9.12 Checking the flue gas pressure monitor ... 26
9.13 Checking the combustion air pressure monitor ... 26
9.14 Checking the safety cut-out ... 27
9.15 Draining the product ... 27
9.16 Draining the heating installation ... 27
9.17 Completing inspection and maintenance work ... 27
10 Troubleshooting ... 27
10.1 Contacting your service partner ... 28
10.2 Reading off the fault codes ... 28
10.3 Resetting parameters to factory settings ... 28
10.4 Unlocking the product after it has been switched off by the safety cut-out ... 28
10.5 Fault in the product ... 28
11 Decommissioning ... 28
11.1 Decommissioning the product ... 28
12 Recycling and disposal ... 29
12.1 Recycling and disposal ... 29
13 Vaillant customer service ... 29
13.1 Customer service ... 29
Appendix ... 30
A System diagram ... 30
B Start-up checklist ... 30
C Overview of diagnostics codes ... 31
D Inspection and maintenance work – Overview ... 34
E Function menu – Overview ... 36
F Status codes – Overview ... 37

G Overview of fault codes 38
H Connection diagrams 40
H.1 Connection diagram, complete 40
H.2 Connection diagram, extract 41
I Commissioning Checklist 42
J Technical data 46
Index 48

spares & parts online IBASIS.CO.UK®

1 Safety

1.1 Action-related warnings

Classification of action-related warnings

The action-related warnings are classified in accordance with the severity of the possible danger using the following warning signs and signal words:

Warning symbols and signal words

Danger!
Imminent danger to life or risk of severe personal injury

Danger!
Risk of death from electric shock

Warning.
Risk of minor personal injury

Caution.
Risk of material or environmental damage

1.2 Intended use

There is a risk of injury or death to the user or others, or of damage to the product and other property in the event of improper use or use for which it is not intended.

The product is intended as a heat generator for closed heating installations and for hot water generation.

Depending on the gas-fired boiler type, the products referred to in these instructions must only be installed and operated in conjunction with the air/flue pipe accessories listed in the other applicable documents.

Intended use includes the following:

- observance of accompanying operating, installation and servicing instructions for the product and any other system components
- installing and fitting the product in accordance with the product and system approval
- compliance with all inspection and maintenance conditions listed in the instructions.

Intended use also covers installation in accordance with the IP class.

Any other use that is not specified in these instructions, or use beyond that specified in this document shall be considered improper use. Any direct commercial or industrial use is also deemed to be improper.

Caution.

Improper use of any kind is prohibited.

1.3 General safety information

1.3.1 Risk caused by inadequate qualifications

The following work must only be carried out by competent persons who are sufficiently qualified to do so:

- Installation
- Disassembly
- Installation
- Start-up
- Maintenance
- Repair
- Decommissioning

▸ Observe all instructions that are included with the product.
▸ Proceed in accordance with the current state of technology.
▸ Observe all applicable directives, standards, laws and other regulations.

1.3.2 Risk of death from escaping gas

What to do if you smell gas in the building:

▸ Avoid rooms that smell of gas.
▸ If possible, open doors and windows fully and ensure adequate ventilation.
▸ Do not use naked flames (e.g. lighters, matches).
▸ Do not smoke.
▸ Do not use any electrical switches, mains plugs, doorbells, telephones or other communication systems in the building.
▸ If it is safe to do so, close the emergency control valve or the main isolator.
▸ If possible, close the gas isolator cock on the product.
▸ Warn other occupants in the building by yelling or banging on doors or walls.
▸ Leave the building immediately and ensure that others do not enter the building.
▸ Notify the gas supply company or the National Grid +44 (0) 800 111999 by tele-

phone once you are outside of the building.

1.3.3 Risk of death due to blocked or leaking flue gas routes

Installation errors, damage, tampering, unauthorised installation sites or similar can cause flue gas to escape and result in a risk of poisoning.

What to do if you smell flue gas in the property:

- Open all accessible doors and windows fully to provide ventilation.
- Switch off the product.
- Check the flue gas routes in the product and the flue gas diversions.

1.3.4 Risk of poisoning and burns caused by escaping hot flue gases

- Only operate the product if the air/flue pipe has been completely installed.

1.3.5 Risk of death due to explosive and flammable materials

- Do not use or store explosive or flammable materials (e.g. petrol, paper, paint) in the installation room of the product.

1.3.6 Risk of poisoning caused by insufficient supply of combustion air

Conditions: Open-flued operation

- Ensure that the air supply to the product's installation room is permanently unobstructed and sufficient in accordance with the relevant ventilation requirements.

1.3.7 Risk of death due to lack of safety devices

The schematic drawings included in this document do not show all safety devices required for correct installation.

- Install the necessary safety devices in the system.
- Observe the applicable national and international laws, standards and guidelines.

1.3.8 Risk of death from electric shock

There is a risk of death from electric shock if you touch live components.

Before commencing work on the product:

- Disconnect the product from the power supply by switching off all power supplies (electrical partition with a contact opening of at least 3 mm, e.g. fuse or line protection switch).
- Secure against being switched back on again.
- Wait for at least 3 minutes until the capacitors have discharged.
- Check that there is no voltage.

1.3.9 Risk of being burned or scalded by hot components

- Only carry out work on these components once they have cooled down.

1.3.10 Risk of death from escaping flue gas

If you operate the product with an empty condensate siphon, flue gas may escape into the room air.

- In order to operate the product, ensure that the condensate siphon is always full.

1.3.11 Risk of material damage caused by using an unsuitable tool

- Use the correct tool to tighten or loosen screw connections.

1.3.12 Risk of material damage caused by frost

- Do not install the product in rooms prone to frost.

1.3.13 Risk of corrosion damage due to unsuitable combustion and room air

Sprays, solvents, chlorinated cleaning agents, paint, adhesives, ammonia compounds, dust or similar substances may lead to corrosion on the product and in the air/flue pipe.

- Ensure that the supply of combustion air is always free of fluorine, chlorine, sulphur, dust, etc.

- Ensure that no chemical substances are stored at the installation site.
- If you are installing the product in hairdressing salons, painter's or joiner's workshops, cleaning businesses or similar locations, choose a separate installation room in which the room air is technically free of chemical substances.

1.4 Regulations (directives, laws, standards)

- Observe the national regulations, standards, guidelines and laws.

2 Notes on the documentation

2.1 Observing other applicable documents

► You must observe all the operating and installation instructions included with the system components.

2.2 Storing documents

► Pass these instructions and all other applicable documents on to the system operator.

2.3 Applicability of the instructions

These instructions apply only to:

Product – Article numbers

VKK GB 806/3-E R1	0010014388
VKK GB 1206/3-E R1	0010014389
VKK GB 1606/3-E R1	0010014390
VKK GB 2006/3-E R1	0010014391
VKK GB 2406/3-E R1	0010014392
VKK GB 2806/3-E R1	0010014393

2.4 System logbook

► Maintain a logbook for the system (→ Page 42).

3 Product description

3.1 Serial number

The serial number can be found on a sticker behind the front flap on the front below the control panel and on the identification plate.

3.2 Information on the identification plate

The identification plate is attached to the rear of the product at the factory.

Information on the identification plate	Meaning
	Read the instructions.
VKK…	Vaillant gas-fired floor-standing condensing boiler
80	Power in kW
6	with condensing technology
/3	Product series
E	Comfort fittings
HL	Only suitable for natural gas
ecoCRAFT exclusive	Product description
G20 – 20 mbar	Gas group and gas connection pressure as set at the factory
Cat.	Approved gas category
Types	Approved gas-fired units
PMS	Permissible total overpressure
T	Max. flow temperature
230 V 50 Hz	Electric connection
W	Max. electrical power consumption
IP	Level of protection
	Heating mode
P	Nominal heat output range
Q	Heat input range
xxxxxxyyyyyyyyyyzzzzzzzzzz	Bar code with serial number, 7th to 16th digit = product article number

Note
Make absolutely sure that the product is compatible with the gas group at the installation site.

3.3 Product design

3.3.1 Front view of the functional elements

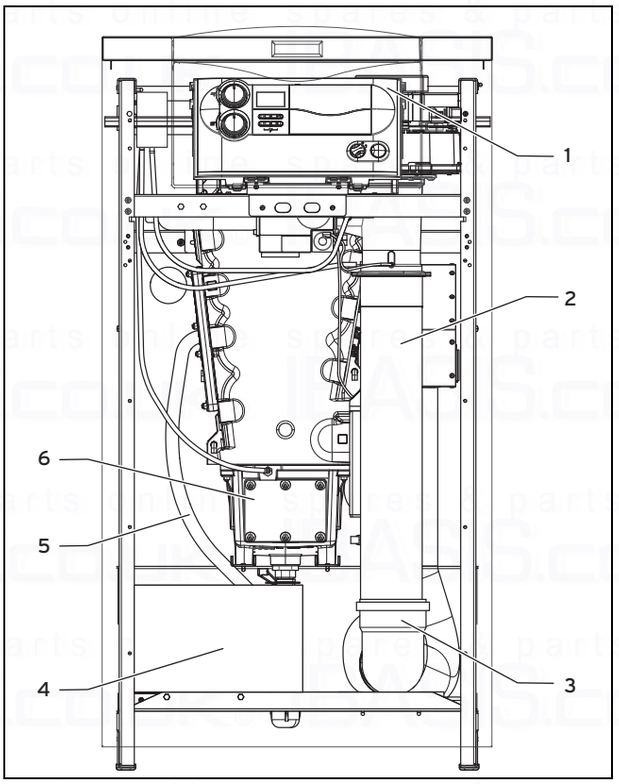

1 Switch box
2 Air intake damper
3 Supply air pipe
4 Neutralisation box (optional)
5 Condensate discharge
6 Condensate tray inspection opening

3.3.2 Functional elements, side view from the right

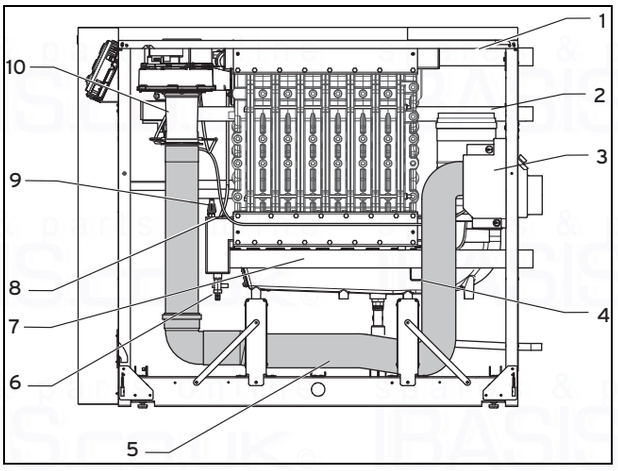

1	Flow	6	Filling and drainage tap
2	Gas pipe	7	Return
3	Supply air box with dust filter	8	Return NTC sensor
4	Condensate tray	9	Water pressure sensor
5	Supply air hose	10	Venturi

3.3.3 Functional elements, side view from the left

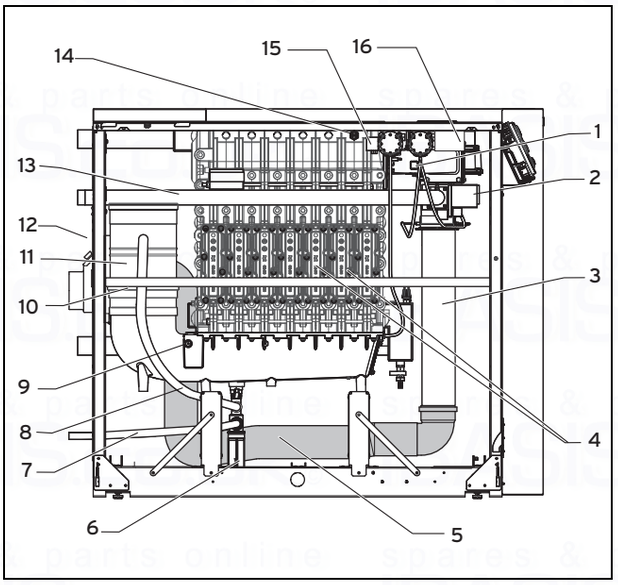

1	Fan	9	Flue gas safety cut-out (SCO) (optional)
2	Gas valve	10	Flue gas silencer
3	Air intake damper	11	Condensate trap
4	Heat exchanger inspection opening	12	Supply air box with dust filter
5	Supply air hose	13	Gas pipe
6	Siphon	14	Safety cut-out (SCO) and block temperature sensor
7	Condensate discharge	15	Fault clearance key for the safety cut-out (SCO)
8	Connection between condensate trap and condensate siphon	16	VR 35 0-10 V pump module

3.3.4 Functional elements, top view

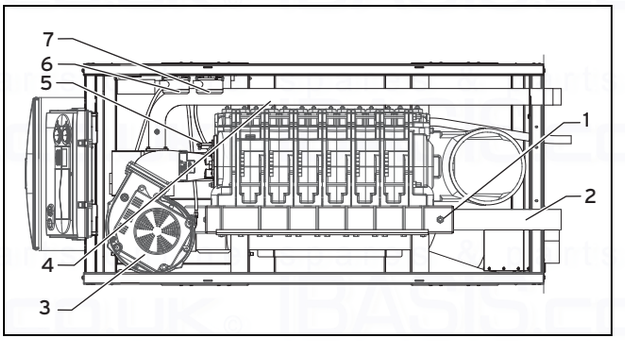

1	Flow NTC sensor	5	Ignition and monitoring electrodes
2	Flow	6	Combustion air pressure monitor
3	Fan	7	Flue gas pressure monitor
4	Safety cut-out (SCO) and block temperature sensor		

3.4 Benchmark

Vaillant is a licensed member of the Benchmark Scheme.

Benchmark places responsibilities on both manufacturers and installers. The purpose is to ensure that customers are provided with the correct equipment for their needs, that it is installed, commissioned and serviced in accordance with the manufacturer's instructions by a competent person approved at the time by the Health and Safety Executive and that it meets the requirements of the appropriate Building Regulations. The Benchmark Checklist can be used to demonstrate compliance with Building Regulations and should be provided to the customer for future reference.

Installers are required to carry out installation, commissioning and servicing work in accordance with the Benchmark Code of Practice which is available from the Heating and Hotwater Industry Council who manage and promote the Scheme.

Benchmark is managed and promoted by the Heating and Hotwater Industry Council.

benchmark
COLLECTIVE MARK
THE MARK OF QUALITY FOR THE INSTALLATION, COMMISSIONING AND SERVICING OF DOMESTIC HEATING AND HOT WATER SYSTEMS

For more information visit www.centralheating.co.uk

3.5 CE label

The CE label shows that the products comply with the basic requirements of the applicable directives as stated on the identification plate.

The declaration of conformity can be viewed at the manufacturer's site.

4 Set-up

4.1 Checking the scope of delivery

► Check that the scope of delivery is complete and intact.

4.1.1 Scope of delivery

Number	Description
1	Heat generator
1	Enclosed documentation

4.2 Unpacking the product

1. Remove the product from its box.
2. Remove the protective film from all parts of the product.

4.3 Installation site

The product can be operated at ambient temperatures of approx. 4 °C to approx. 50 °C.

For sound insulation, you can use a (noise-insulating) boiler platform or similar equipment; we recommend setting the product up on boiler foundations of 5 cm to 10 cm in height.

► When selecting the installation site, take into consideration the product's weight when it is ready for operation, including the water content in accordance with the Technical data (→ Page 46).

A separate room with ventilation and aeration may be required as the installation site.

► When selecting the installation site and its ventilation, observe the relevant national regulations.

► Particularly after the construction phase is complete, replace or clean the dust filter as it may be blocked with construction dust.

4.4 Transporting the product to the installation site

Warning.
The high product weight poses a risk of injury during transport.

Excessive load bearing may lead to injuries.

► Use a suitable carrying aid or a pallet truck to transport the product.

1. Secure the product to a suitable carrying aid or a suitable pallet truck.
2. Transport the product to the installation site.

4.5 Product dimensions and connection dimensions

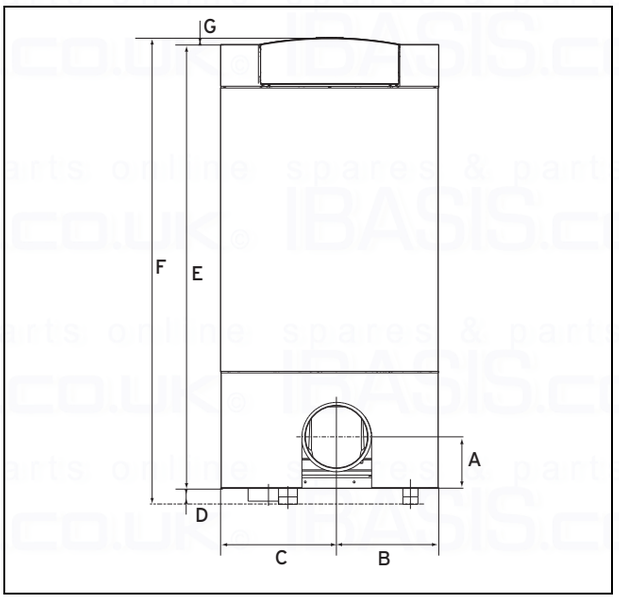

Item	VKK GB 806/3-E R1 VKK GB 1206/3-E R1 VKK GB 1606/3-E R1	VKK GB 2006/3-E R1 VKK GB 2406/3-E R1 VKK GB 2806/3-E R1
A	165	165
B	326	326
C	369	369
D	50	50
E	1168	1478
F	1270	1580
G	22	22

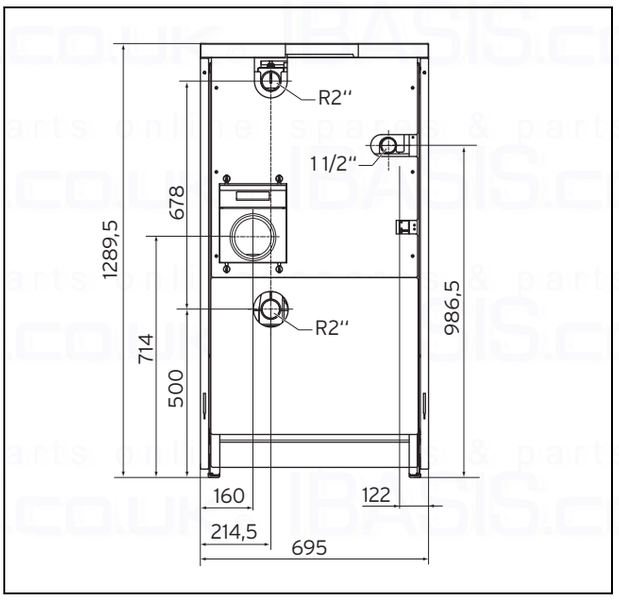

4.6 Minimum clearances and installation clearances

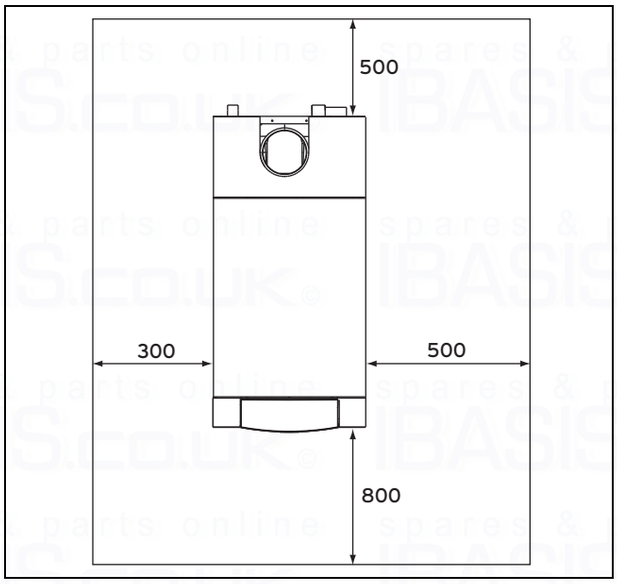

► When using the accessories, observe the minimum clearances/installation clearances.

It is not necessary to maintain a clearance between the product and components made of combustible materials that go beyond the minimum clearances

The boiler shall only be sited on floors and adjacent to walls capable of withstanding at least 65 degrees C. (However, the recommended minimum distance must be observed).

4.7 Aligning the product

► Use the height-adjustable feet to align the product horizontally in order to ensure that the condensate drains from the condensate tray.

4.8 Opening the front flap

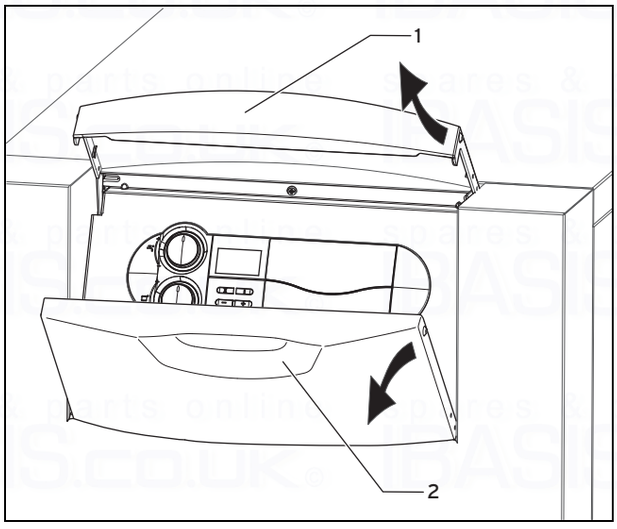

► Open the front flap by lifting the silver handle bar **(1)**.

◁ The front flap **(2)** automatically swivels downwards and the control panel becomes accessible.

4.9 Removing/installing the front casing

4.9.1 Removing the front casing

1. Open the front flap. (→ Page 10)

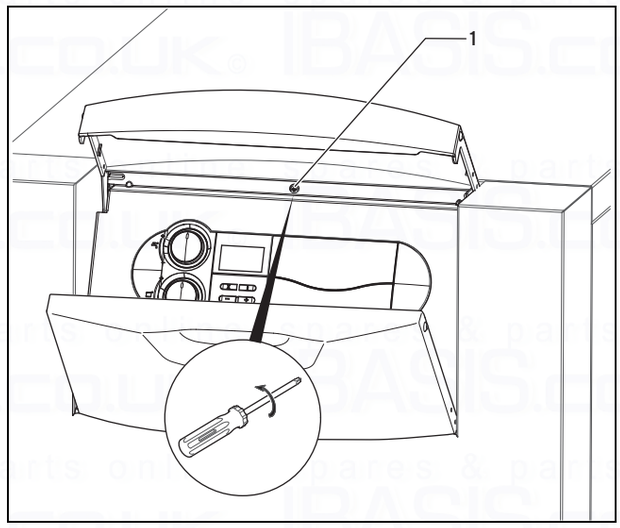

2. Undo the screw **(1)** above the control panel.
3. Pull the front casing in the upper area to the front and out.
4. Raise the front casing to remove it.
5. If required, you can now remove the rest of the casing sections.

4.9.2 Installing the front casing

1. Attach the front casing to the bottom and press on the product until the locking bolts audibly click into place.
2. Screw in the screw for securing the front casing again.

4.10 Removing/installing the upper casing and side sections of the casing

4.10.1 Removing the upper casing and side sections of the casing

1. Remove the front casing. (→ Page 10)
2. Pull the upper casing forwards.
3. Remove the upper casing.
4. Pull the side sections of the casing up and out so that the side sections are released from the mount.
5. Lift the side sections of the casing up and out.

4.10.2 Installing the upper casing and side sections of the casing

1. Insert the side sections of the casing into the product from above.
2. Push the top of the side sections of the casing until the side sections click into place in the mount.
3. Place the upper casing onto the product.
4. Slide the upper casing backwards until the casing clicks into place.

5 Installation

5.1 Preparing for installation

Danger!

Risk of scalding and/or risk of material damage due to incorrect installation leading to escaping water.

Stresses in supply lines can cause leaks.

- Install the supply lines without tension.

Caution.

Risk of material damage due to contaminated lines.

Foreign bodies, such as welding remnants, sealing residues or dirt in the supply lines, may cause damage to the product.

- Blow or flush the supply lines thoroughly prior to installation.

- Install an expansion relief valve on-site.
- A discharge pipe with inlet funnel and siphon must be routed on-site from the discharge line of the expansion relief valve to a suitable drain in the installation room. The drain must be visible.
- Install a purging device at the highest point in the heating installation.
- Install a filling/draining device in the heating installation.

Conditions: Plastic pipes present in the heating installation

- Install a suitable thermostat at the heating flow on-site in order to protect the heating installation against temperature-related damage.
- Connect the thermostat to the terminals for the surface-mounted thermostat (blue ProE plug).
- Use seals that are made of a paste-like fibre material because seals that are made of rubber-like materials may be subject to plastic deformation, which can lead to pressure losses.

5.2 Required accessories (on-site)

The following required accessories (to be provided on-site) are necessary for the installation:

- Gas isolator cock with fire protection device
- Expansion relief valve, heating side
- Service valves (heating flow and return)
- Low loss header (optional)
- Heat generator pump
- Expansion vessel
- Controller
- Flue pipe
- Condensate pump (optional)
- Neutralising unit
- Automatic air vent

5.3 Performing the gas installation

Using the incorrect type of gas may cause fault shutdowns in the product. Ignition and combustion noise may occur in the product.

- Only use the gas type listed on the identification plate.
- Make sure that the existing gas meter is capable of passing the rate of gas supply required.

Caution.

Risk of material damage due to the gas leak-tightness test.

At a test pressure of >11 kPa (110 mbar), gas leak-tightness tests may cause damage to the gas valve.

- If, during gas leak-tightness tests, you also place the gas lines and the gas valve in the product under pressure, use a max. test pressure of 1.1 kPa (110 mbar).
- If you cannot limit the test pressure to 11 kPa (110 mbar), close any gas isolator cocks that are installed upstream from the product before you carry out the gas leak-tightness test.
- If, during gas leak-tightness tests, you have closed the gas isolator cock that is installed upstream of the product, relieve the gas line pressure before you open this gas isolator cock.

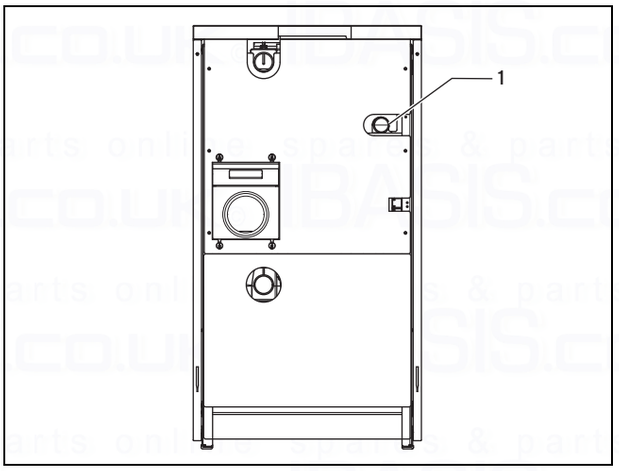

- The cross-sections of the gas pipe must be designed to suit the nominal floor-standing boiler heat loading.
- Install the gas line without tension on the connection in the product **(1)** in accordance with the recognised rules of engineering practice.
- Remove the residues from the gas pipe by blowing through the gas pipe.
- Install a gas isolator cock with fire protection device in the gas line, upstream from the product, at an easily accessible location. The gas stopcock must be at least the same nominal size as the gas connection (R 1.5").
- Purge the gas line before start-up.

5.3.1 Checking the gas line for leak-tightness

► Check the entire gas line properly for leak-tightness.

5.4 Installing hydraulics

1. Install the connections in accordance with the relevant standards and the generally recognised rules of good engineering practice.
2. If using non-diffusion-tight plastic pipes in the heating installation, partition the system by installing an external heat exchanger between the heat generator and the heating installation.
3. Only solder connectors if the connectors are not yet screwed to the service valves in order to avoid damaging the seals.

5.4.1 Connecting the heating flow and heating return

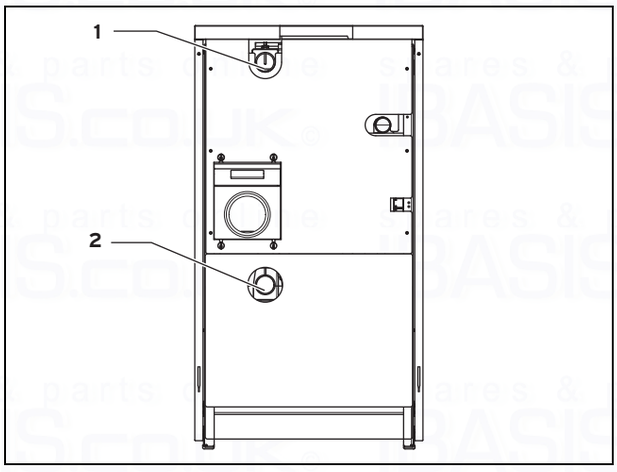

1. Between the heating installation and the product, install the required safety devices and isolators that are to be set on-site, along with a filling/draining cock in the return.
2. Connect the heating flow to the heating flow connection **(1)**.
3. Connect the heating return to the heating return connection **(2)**.
4. Install the heat generator pump that is to be set on-site and that is not integrated into the gas-fired floor-standing condensing boiler.

5.4.2 Connecting the domestic hot water cylinder

► If required, install a domestic hot water cylinder.

5.5 Connecting the condensate drain pipework

The pH value of the flue gas condensate is between 3.5 and 4.5. The condensate does not contain any inadmissible heavy metals. The gas-fired floor-standing condensing boiler is equipped with a condensate collector and a condensate discharge with siphon. The condensate that is produced during the combustion is either guided directly to the drain channel via the siphon, or it is first neutralised and then guided to the drain.

► Find out from the local water authority whether neutralisation is required.

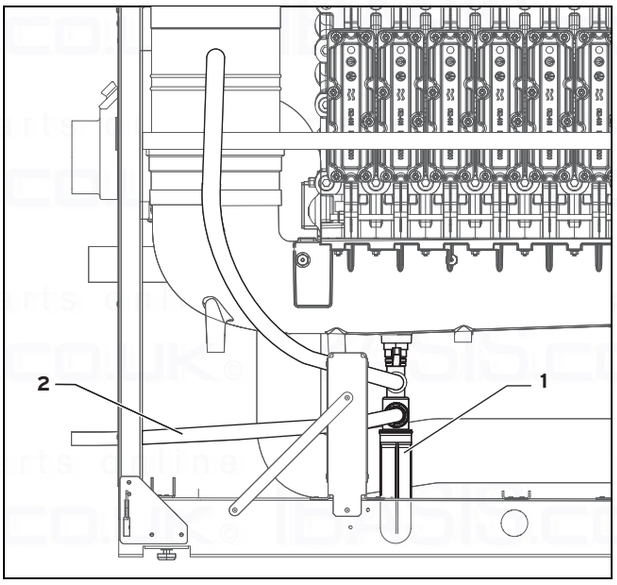

Danger!
Risk of death from escaping flue gases!

The siphon's condensate discharge pipe must not be connected to waste-water pipework or a tundish because, otherwise, the internal condensate siphon may be drained fully and flue gas may escape.

► Do not connect the condensate drain pipework tightly to the waste-water piping.

► Route the condensate discharge pipe for the channel with a downward gradient using a suitable plastic or stainless steel pipe to the nearest waste-water outlet, minimum cross-section of DN 25.
► If an extension of the on-site condensate discharge pipe is required, use only condensate-resistant drain pipes.
► Route the condensate discharge pipe **(2)** from the gas-fired floor-standing condensing boiler via a DN 25 plastic pipe. The discharge point must remain visible.
► Before starting up the product, fill the condensate siphon **(1)** with water through the flue gas opening in the flue gas collector.
► Check whether the condensate has been discharged correctly.

5.6 Installing and connecting the flue pipe

5.6.1 Air/flue system, system-certified, setting up

1. You can find out which air/flue pipes may be used by consulting the enclosed air/flue system set-up instructions.
2. Install the flue pipe using the installation manual.

5.6.2 Unit types: B23, B23P and C63

5.6.2.1 Air/flue system, not system-certified, setting up

With unit types B23 and B23P, the combustion air is taken out of the installation room. The ventilation openings in the installation room must comply with the relevant regulations.

With unit type C6, the combustion air is fed in from the outside through a combustion air pipe. The air intake port and the flue gas opening must not be on opposite sides of the building.

When using flue systems that have not been tested and approved with the boiler, you must observe the following conditions:

– The flue system must be suitable for the boiler (e.g. in terms of temperature, pressure and leak-tightness class). The flue pipework must be labelled with the CE conformity mark or, if necessary, be certified according to national standards.
– The design standards determine limits and safety-related requirements concerning the planning, construction and start-up as well as the maintenance of flue systems.

► Observe the applicable design standards for flue systems.
► Observe the information provided by the flue pipework manufacturers.
► Dimension the flue system in accordance with EN 13384-1. The required system parameters are listed under "Technical data".
► Select the flue pipework diameter so that it is at least as large as the diameter of the flue spigot on the boiler. A reduction is not permitted.
► Lay the horizontal part of the flue pipework with a downward gradient towards the boiler.

5.6.2.2 Connecting the flue pipe

Note

Information on chimney design:

The modulation of the boiler with combustion air adaptation achieves a high combustion efficiency. This requires technical proof of the suitability of the chimney in accordance with the applicable standards.

All condensing boilers are equipped with special connectors for connecting condensate-proof and overpressure-tight flue pipework.

► Install an inspection opening in the flue pipework for cleaning purposes.
► Install a sealable measurement opening for measuring the CO_2 content on-site on the outside of the product casing in the flue pipework.
► If necessary, equip the flue pipework with an optionally available flue gas safety cut-out (SCO) which switches off at 120 °C.

5.7 Electrical installation

Danger!

Risk of death from electric shock as a result of an improper electrical connection!

An improper electrical connection may negatively affect the operational safety of the product and result in material damage or personal injury.

► Only carry out the electrical installation if you are a trained competent person and are qualified for this work.
► Observe all applicable laws, standards and directives in the process.
► Earth the product.

► Install a mains power switch on-site in the product's power supply.
► Route the mains and low-voltage cables (e.g. sensor cable) with sufficient space between them in order to prevent interfering impulses that are caused by crosstalk.

The product is equipped with connectors and is wired ready for connection. The power supply cable and all other connection cables can be connected to the corresponding ProE system plugs that are provided; see the connection diagram (→ Page 40).

5.7.1 Opening/closing the electronics box

5.7.1.1 Opening the electronics box

1. Open the front flap. (→ Page 10)
2. Remove the front casing. (→ Page 10)
3. Hinge the electronics box forwards.
4. Undo the clips from the retainers.
5. Fold up the cover.

5.7.1.2 Closing the electronics box

1. Close the cover by pressing it downwards onto the electronics box.
2. Ensure that all of the clips audibly click into the retainers.
3. Swing the electronics box up.

5.7.2 Carrying out the wiring

1. Open the electronics box. (→ Page 13)

Caution.

Risk of material damage caused by incorrect installation.

Mains voltage at incorrect terminals and plug terminals may destroy the electronics.

► Do not connect any mains voltage to the eBUS terminals (+/-).
► Only connect the mains connection cable to the terminals marked for the purpose.

2. Route the connection cables of the components to be connected through the cable duct to the electronics box.
3. Use the installed strain reliefs.
4. Shorten the connection cables as necessary. Leave the conductors of the protective conductor approx. 10 mm longer than the conductors of the L and N conductors.
5. To prevent short circuits if a strand accidentally comes loose, only strip the outer sheathing of flexible lines to a maximum of 30 mm.
6. Ensure the inner conductor insulation is not damaged when stripping the outer sheathing.
7. Only strip inner conductors just enough to establish good, sound connections.
8. To avoid short circuits resulting from loose individual wires, fit conductor end sleeves on the stripped ends of the conductors.
9. Screw the respective plug to the supply line.
10. Check whether all conductors are sitting mechanically securely in the terminals of the plug. Remedy this if necessary.
11. Plug the plug into the associated PCB slot.
12. Use the strain reliefs to secure the cable in the electronics box.
13. After wiring all of the accessories, switch on the mains voltage and check that the product is working correctly.

5.7.3 Establishing the power supply

Caution.
Risk of material damage due to high connected voltage.

At mains voltages greater than 253 V, electronic components may be damaged.

► Make sure that the rated voltage of the mains is 230 V.

1. Observe all valid regulations.
2. Provide one common power supply for the boiler and for the corresponding control:
   – Power supply: Single phase, 230 V, 50 Hz
   – Fuse protection: ≤ 6 A
3. Connect the product using a fixed connection and a partition with a contact opening of at least 3 mm (e.g. fuses or power switches).
4. Use a suitable flexible three-core cable that complies with standards for the power supply cable that is routed to the product via the grommet.
5. Route the power supply cable to the connection level in the electronics box.
6. Carry out the wiring. (→ Page 13)
7. Screw the turquoise plug that is installed to the right in the electronics box to the power supply cable.
8. Connect the plug to the slot of the same colour on the PCB.
9. Ensure that access to the partition is always available, and that it is not covered or blocked.

5.7.4 Connecting electrical accessories

► Carry out the wiring. (→ Page 13)

► Connect the connection cables to the corresponding terminals and/or slots in the electronics system, see Overall connection diagram (→ Page 40) and, if required, Connection diagram extract (→ Page 41) in the appendix.

► If you connect a room thermostat (continuous control connection terminals 7-8-9, white ProE plug) or a weather-controlled temperature control or room temperature control (bus terminals, red ProE plug) to the product, you must leave the bridge in place between terminals 3 and 4 (purple ProE plug).

► If no 230 V room/timer thermostat is used, you must leave the bridge in place between terminals 3 and 4 (purple ProE plug).

► If required, connect accessories in the same way.

Connecting the heat generator pump (fixed speed)

► Connect the heat generator pump to the green ProE plug (X18) on the terminal block.

Connecting the heat generator pump (speed-controlled)

► Connect the heat generator pump to the green ProE plug (X18) on the terminal block.

► Connect the control wire to the 0-10 V adapter box that is located at the top left beside the two pressure switches in the product. In doing so, note the polarity because, if it is connected incorrectly, the heat generator pump will only work at minimum speed.

Connecting an external flow thermostat

► Connect an external flow thermostat (e.g. to protect underfloor heating) to the terminals for the surface-mounted thermostat (blue ProE plug).

Flue gas safety cut-out (SCO)

► Connect the flue gas safety cut-out to the supply line for the flue pressure switch; refer to the enclosed set-up instructions for further information about this.

Gas pressure monitor

► Connect a gas pressure monitor to the terminals for the surface-mounted thermostat (blue ProE plug).

Connecting a condensate pump

► Connect the alarm output for a condensate pump to the terminals for the surface-mounted thermostat (blue ProE plug).

Note
If several contacts are connected to the terminals for the surface-mounted thermostat (blue ProE plug), connect the contacts in sequence.

Connecting a cylinder charging pump

► Connect the cylinder charging pump as specified in the Connection diagram extract (→ Page 41).

5.7.5 Connecting the controller

To control the heating installation, you can use a weather-controlled outside temperature control or room temperature control with modulating burner control, e.g. VRC 700.

► Observe the information in the controller's installation instructions.

- ► Connect the control to the heat generator as shown in the "Overall connection diagram" (→ Page 40).
- ► Alternatively, if the control allows, you can fit the control in the product's control panel fascia (install inside).
- ► Connect sensors and the system assemblies that are **not** listed in the section "Connecting electrical accessories" (→ Page 14) to the control.
- ► After completing the electrical installation, close the electronics box (→ Page 13).

6 Operation

6.1 Operating concept of the product

The operating concept and the read-off and setting facilities of the operator level are described in the operating instructions.

You can access the installer level with the parameters and system-relevant settings after entering the service code.

6.2 Calling up the installer level

1. Only access the installer level if you are a competent person.
2. Press the **i** and **+** buttons at the same time to activate diagnostics mode.
3. Use the **–** or **+** button to select diagnostics code d.97.
4. Press the **i** button.
5. Use the **–** or **+** button to set the value to 17.
6. Press and hold the **i** button for 5 seconds (until the display stops flashing) to save the value.

   Overview of diagnostics codes (→ Page 31)

Note

The system automatically exits the installer level after 15 minutes. Pressing the **+**, **–** or **i** button will extend this time by 15 minutes.

6.3 Checking the status codes

You can call up the status codes in the display. The status codes provide information about the current operating status of the product.

- ► Press the **i** button to display the current product status. The status code is displayed: **S.xx**.
- ► Press the **i** button again to hide the status code.

  Status codes – Overview (→ Page 37)

7 Start-up

7.1 Servicing tools

The following test and measuring equipment is required for start-up:

- – Digital or U tube manometer.
- – Allen key 3.0 mm
- – Star wrench (Torx) T40

7.2 Carrying out the initial start-up

Initial start-up must be carried out by a customer service technician or an authorised competent person.

Any further start-up/operation work is carried out by the operator as described in the operating instructions.

Danger!
Risk of death due to escaping gas!

An improper gas installation or a defect may impair the operational safety of the product and lead to personal injury and material damage.

- ► Check the gas tightness of the product before starting it up and after each inspection, maintenance or repair.

- ► Remove the upper casing by pulling it forwards.
- ► Remove the side sections of the casing.
- ► When starting up the unit, proceed in accordance with the attached checklist.

7.3 Function menu

The function menu in the DIA system allows you to control how individual actuators work. The function menu can always be started after switching on the product or after pressing the **Fault clearance** key. The product's electronics switch to normal operating mode if you do not operate the product for five seconds or if you press the − button. You can find a flow chart in the appendix under Function menu – Overview (→ Page 36)

7.4 Calling up the check programmes

By activating various check programmes, you can trigger special functions on the product.

Display	Meaning
P.00	Purge the product, heating circuit and cylinder charging circuit: The product does not start up. The heating pump runs intermittently. After approx. 6.5 minutes, the product switches to the cylinder charging pump (alternatively, by pressing the **i** button). The check programme runs for approx. 6.5 minutes for each circuit.
P.01	Start up the burner at maximum load: The product works at maximum load after a successful ignition.
P.02	Start up the burner at minimum load: The product works at minimum load after a successful ignition.

Display	Meaning
P.05	Test function for the safety cut-out (SCO): The burner is switched on at maximum power and the pumps are switched off; the temperature control is switched off so that the burner heats up until the safety cut-out is triggered by reaching the safety cut-out temperature.

- ► Press and hold the **+** button and, at the same time, briefly press the **Fault clearance** key. Release the + button only when P.00 is shown in the display.
- ► Press the **+** or **–** button to switch to the next check programme.
- ► Press the **i** button to start the check programme.

7.5 Reading off the filling pressure

The product comes with a digital pressure indicator.

- ► To read off the digital value for the filling pressure, press the **–** button briefly.
  - ◁ The display will show the filling pressure for approximately 5 seconds.

If the heating installation is full, the filling pressure must be between 0.1 MPa and 0.2 MPa (1.0 bar and 2.0 bar) to ensure it operates properly.

If the heating installation extends over several storeys, higher filling pressures may be required to avoid air entering the heating installation.

7.6 Preventing low water pressure

To prevent damage to the heating installation that is caused by low filling pressure, the product is fitted with a water pressure sensor. If the filling pressure falls below 0.06 MPa (0.6 bar), the product indicates low pressure by displaying a flashing pressure value. If the filling pressure falls below 0.03 MPa (0.3 bar), the product switches off. The display shows **F.22**.

- ► Top up the heating water to start the product up again.

The pressure value flashes in the display until a pressure of 0.6 MPa (6 bar) or higher has been reached.

- ► If you notice frequent drops in pressure, determine and eliminate the cause.

7.7 Checking and treating the heating water/filling and supplementary water

Caution.

Risk of material damage due to poor-quality heating water

- ► Ensure that the heating water is of sufficient quality.

- ► Before filling or topping up the system, check the quality of the heating water.

Checking the quality of the heating water

- ► Remove a little water from the heating circuit.
- ► Check the appearance of the heating water.
- ► If you ascertain that it contains sedimentary materials, you must desludge the system.
- ► Use a magnetic rod to check whether it contains magnetite (iron oxide).
- ► If you ascertain that it contains magnetite, clean the system and apply suitable corrosion-protection measures, or fit a magnet filter.
- ► Check the pH value of the removed water at 25 °C.
- ► If the value is below 8.2 or above 10.0, clean the system and treat the heating water.
- ► Ensure that oxygen cannot get into the heating water.

Checking the filling and supplementary water

- ► Before filling the system, measure the hardness of the filling and supplementary water.

Treating the filling and supplementary water

- ► Observe all applicable national regulations and technical standards when treating the filling and supplementary water.

Provided the national regulations and technical standards do not stipulate more stringent requirements, the following applies:

You must treat the heating water in the following cases:

- If the entire filling and supplementary water quantity during the operating life of the system exceeds three times the nominal volume of the heating installation, or
- If the guideline values listed in the following table are not met, or
- If the pH value of the heating water is less than 8.2 or more than 10.0.

Total heating output	Water hardness at specific system volume[1)]					
	≤ 20 l/kW		> 20 l/kW ≤ 50 l/kW		> 50 l/kW	
kW	ppm $CaCO_3$	mol/m³	ppm $CaCO_3$	mol/m³	ppm $CaCO_3$	mol/m³
< 50	< 300	< 3	200	2	2	0.02
> 50 to ≤ 200	200	2	150	1.5	2	0.02
> 200 to ≤ 600	150	1.5	2	0.02	2	0.02
> 600	2	0.02	2	0.02	2	0.02

1) Nominal capacity in litres/heating output; in the case of multi-boiler systems, the smallest single heating output is to be used.

Caution.

Risk of material damage if the heating water is treated with unsuitable additives.

Unsuitable additives may cause changes in the components, noises in heating mode and possibly subsequent damage.

- ► Do not use any unsuitable frost and corrosion protection agents, biocides or sealants.

No incompatibility with our products has been detected to date with proper use of the following additives.

- ► When using additives, follow the manufacturer's instructions without exception.

We accept no liability for the compatibility of any additive or its effectiveness in the rest of the heating system.

Additives for cleaning measures (subsequent flushing required)

- Adey MC3+
- Adey MC5
- Fernox F3
- Sentinel X 300
- Sentinel X 400

Additives intended to remain permanently in the system

- Adey MC1+
- Fernox F1
- Fernox F2
- Sentinel X 100
- Sentinel X 200

Additives for frost protection intended to remain permanently in the system

- Adey MC ZERO
- Fernox Antifreeze Alphi 11
- Sentinel X 500

► If you have used the above-mentioned additives, inform the operator about the measures that are required.

► Inform the operator about the measures required for frost protection.

7.8 Filling and purging the heating installation

1. Flush the heating installation thoroughly before filling it.
2. Observe the information on treating heating water.
3. Open all thermostatic radiator valves.
4. Loosen the cap on the automatic air vent (installed on-site) by one or two rotations. Ensure that the opening in the cap is not pointing in the direction of the electronic components.
5. Connect the filling and drainage tap (to be provided on-site) in the heating installation to a heating water supply in accordance with the relevant standards. Do not fill the heating installation via the product's filling and drainage tap.
6. Open the heating water supply.
7. If necessary, check that both service valves on the product are open.
8. Slowly open the heating installation's filling and drainage tap to fill the heating installation.
9. Close the purging valve as soon as water escapes.
10. Fill the installation up to a system pressure of 0.1 MPa (1.0 bar) to 0.2 MPa (2.0 bar).

Note
In a heating installation over several storeys, a higher system pressure may be required.

11. Shut off the heating water supply.
12. Purge the lowest radiator until water flows out of the purging valve without bubbles.
13. Purge all other radiators until the heating installation is completely filled with water.
14. To purge the heating or cylinder charging circuit, select check programme (→ Page 15) **P.00**.
    ◁ The product does not start up and the on-site heating pump runs intermittently. The check programme runs for approx. 6.5 minutes.
15. Press the **i** button again to purge the cylinder charging circuit.
16. Top up with water if, while the check programme is running, the system pressure drops below 0.08 MPa (0.8 bar).
17. Read off the system pressure on the display at the end of the check programme. If the system pressure has dropped, fill and purge the system again.
18. Close the heating installation's filling and drainage tap and the hot water supply, and remove the hose.
19. Check all of the connections and the entire heating installation for leak-tightness.

7.9 Filling the condensate siphon

Danger!
Risk of poisoning from escaping flue gas!
An empty or insufficiently filled condensate siphon may allow flue gas to escape into the room air.

► Before starting up the product, fill the condensate siphon with water through the flue gas opening in the flue gas collector.

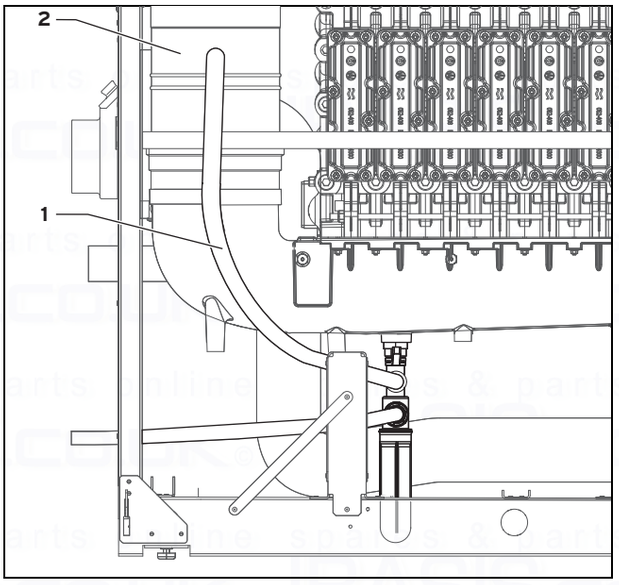

1. Before filling the siphon, connect the condensate drain pipework to the rear of the product. Refer to the information on routing the condensate discharge pipe in the section entitled "Connecting the condensate discharge pipe (→ Page 12)".

Conditions: Air/flue pipe not yet connected

► Fill the condensate siphon via the flue gas opening in the flue gas collector **(2)** (fill quantity approx. 1.5 l).

Conditions: Air/flue pipe already connected

► Remove the condensate discharge pipe **(1)** from the condensate trap.

- ► Fill the condensate siphon with approx. 1.5 litres of water via the condensate discharge pipe.
- ► Slide the condensate discharge pipe back onto the condensate trap.

7.10 Checking and adjusting the gas ratio setting

7.10.1 Checking the gas setting

Note
Before starting up the boiler compare the details of the type of gas specified on the identification plate with the type of gas supplied at the installation site. This boiler is suitable for Natural Gas ONLY.

The combustion of this boiler has been checked, adjusted and preset at the factory for operation on the type of gas defined on the identification plate. No measurement of the combustion is necessary to set up the boiler.

- ► Do not adjust the multifunctional automatic gas valve.
- ► Ensure:
  - that the boiler has been installed in accordance with these instructions,
  - the integrity of the flue system and the flue seals, as described in the flue installation instructions enclosed with this boiler, and as described below
  - a visual check is carried out on the boiler combustion circuit and the relevant seals,
  - that any defects have been corrected at this stage.

Proceed to put the boiler into operation as follows:

- ► Start the boiler by activating the test program **P.1** (→ Page 15).
- ► Check for tightness of the flue gas system. (→ Page 18)
- ► Check the gas inlet working pressure. (→ Page 18)
- ► Check the gas flow rate. (→ Page 19)
- ► Please note that you must re-measure the gas flow rate or the gas inlet working pressure, if changes were required to correct any issues found.

7.10.2 Checking for tightness of the flue gas system

Caution.
Risk of malfunctions due to dirt on the burner.

If the combustion air contains particles of dirt, this may make the burner dirty.

- ► Take particular care to ensure that there is no building dust, fibres of insulating material or pollen in the combustion air.

1. Check the integrity of the flues system according to TB 008 (Edition 2) and TB 017.
2. Check entire length of the air and flue gas system for correct installation to ensure that:
   - there are no blockages,
   - all joints are sound,
   - the fall angle is correct
   - it is adequately supported
   - all in accordance with the relevant flue installation instructions.
3. Correct the defects.
4. If you cannot correct the defects you must not start up the boiler.

7.10.3 Checking the gas inlet working pressure

1. Ensure that the gas inlet working pressure can be obtained with all other gas appliances in the property working.
2. Remove the front casing from the boiler.
3. Close gas isolation valve of the boiler.

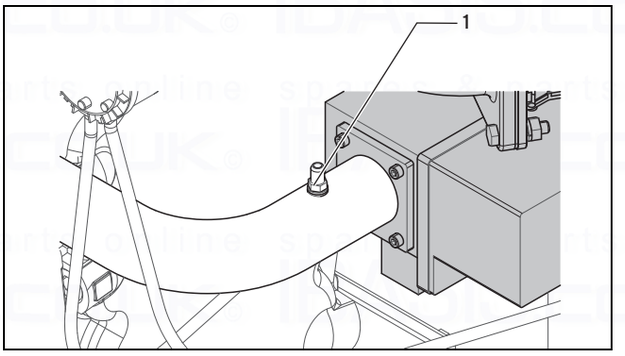

4. Loosen the sealing screw of the pressure measurement nipple marked „in“ **(1)** on the gas pipe.
5. Connect a digital pressure gauge or U-tube manometer.
6. Open gas isolation valve of the boiler.
7. Start the boiler by activating the test program **P.1** (→ Page 15).
   - In addition, ensure that maximum heat can be dissipated into the heating system.
8. With the boiler operating at full load check that the gas inlet working pressure at the reference test point **(1)** complies with the requirements:

Boiler	Natural Gas (G 20)	
	Minimum pressure	Maximum pressure
ecoCRAFT exclusive VKK GB 806/3-E R1 - VKK GB 2806/3-E R1	1.7 kPa (17.0 mbar)	2.5 kPa (25.0 mbar)

9. Should the pressure recorded at the reference test point in the boiler be lower than indicated check if there is any blockage in the pipework or if the pipework is undersized.
10. If the supply pressure is out of tolerance contact your Emergency Service Provider.
11. If the gas inlet working pressure at the reference test point **(1)** is not within the permissible range and you cannot correct the failure, notify the gas supply company.
12. Take the boiler out of operation by pressing the **+** and **i** buttons simultaneously and turn down both thermostat control knobs.
13. Close the gas isolation valve of the boiler.

14. Remove the pressure gauge and re-tighten the sealing screw **(1)**.
15. Turn on gas at the gas isolation valve.
16. Make sure that there is no leakage at the sealing screw.
17. Turn off gas at the gas isolation valve.
18. Make sure that there is no leakage at the sealing screw.
19. Put the front casing back on.
20. Turn off electrical supply to the boiler.
21. You must not start up the boiler.
22. If the gas inlet working pressure is within the permissible range, proceed as follows:
23. Take the boiler out of operation by pressing the **+** and **i** buttons simultaneously and turning down both of the thermostat control knobs.
24. Close gas isolation valve of the boiler.
25. Remove the pressure gauge and re-tighten the sealing screw **(1)**.
26. Open the gas isolation valve of the boiler.
27. Make sure that there is no leakage at the sealing bolt screw.
28. Put the front casing back on.
29. Reset boiler controls for normal operation.
30. Record the appliance gas inlet working pressure (mbar) in the Benchmark gas boiler commissioning checklist.

7.10.4 Checking the gas flow rate

Note
The boiler is fitted with a multifunctional automatic gas valve which ensures that the precise air/gas ratio is provided under all operating conditions. The gas flow rate has been set during production and does not require adjustment.

1. Start the boiler by activating the test program **P.1** (→ Page 15).
   – In addition, ensure that maximum heat can be dissipated into the heating system by.
2. Wait at least 5 minutes until the boiler has reached its operating temperature.
3. Ensure that all other gas appliances in the property are turned off.
4. Measure the gas flow rate at the gas meter..
5. Check that the gas flow rate is as stated:

Boiler	Nominal net heat input in kW	Gas Rate		
		Natural Gas in m³/h		
		nominal	+ 5 %	− 10 %
VKK GB 806/3-E R1	80	8.46	8.88	7.61
VKK GB 1206/3-E R1	115.9	12.25	12.86	11.03
VKK GB 1606/3-E R1	160	16.91	17.76	15.22
VKK GB 2006/3-E R1	200	21.14	22.2	19.03
VKK GB 2406/3-E R1	240	25.37	26.64	22.83
VKK GB 2806/3-E R1	280	29.59	31.97	26.63

6. If the measured gas flow rate lies outside the tolerance limits specified, do not operate the boiler and inform the Vaillant Service Solutions (0870 6060 777).
7. If the measured gas flow rate is within the tolerance limits, then proceed as follows:
8. Take the boiler out of operation by pressing the **+** and **i** buttons simultaneously and turn down both thermostat control knobs.
9. Record the boiler maximum gas flow rate onto the boiler commissioning checklist.

7.11 Checking that the product functions correctly and checking the leak-tightness

1. Start up the product.
2. In particular, check the burner seal for leaks using a CO_2 measuring instrument. If required, tighten the burner seal to a torque of 12 Nm.
3. Check that all control, regulation and monitoring devices are functioning properly.
4. Check that the condensate discharge pipe has been installed correctly and is securely fastened.
5. Check the over-ignition and that the flame on the burner is burning evenly (diagnostics code **d.44**: < 250 = excellent flame, > 700 no flame).
6. Ensure that all casing sections are installed correctly.

7.11.1 Checking the heating mode

► Ensure that there is a heat requirement, e.g. by setting the control to a higher required temperature.

◁ If the product is working correctly, the heat generator pump for the heating circuit must start running.

7.11.2 Checking the hot water generation

Conditions: Domestic hot water cylinder connected

► Check that the domestic hot water generation is working correctly by turning the dial for the cylinder temperature clockwise as far as it will go.
► If you have connected a control that can be used to set the domestic hot water temperature, set the domestic hot water temperature on the heat generator to the maximum possible temperature.
► Adjust the target temperature for the connected domestic hot water cylinder to the controller.

7.11.3 Checking leak-tightness

- ► Check the gas line, the heating circuit and the hot water circuit for leak-tightness.
- ► Check that the air/flue pipe has been installed correctly.

Conditions: Room-sealed operation

- ► Check whether the vacuum chamber has been sealed so that it is leak-tight.

8 Adapting the unit to the heating installation

8.1 Calling up diagnostics codes

You can use the parameters that are marked as adjustable in the overview of diagnostics codes to adapt the product to the heating installation and the needs of the customer.

Overview of diagnostics codes (→ Page 31)

- ► Call up the installer level. (→ Page 15)

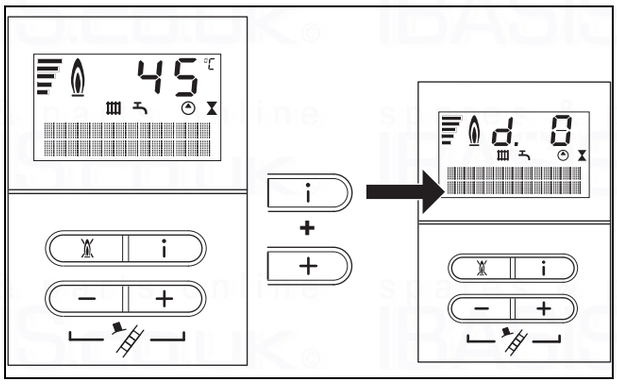

- ► Press the **i** and **+** buttons simultaneously.
  - ◁ **d.00** will appear on the display.

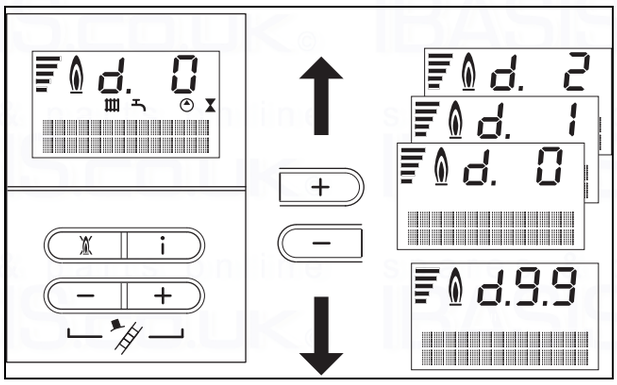

- ► Use the **–** or **+** button to select the required diagnostics code.

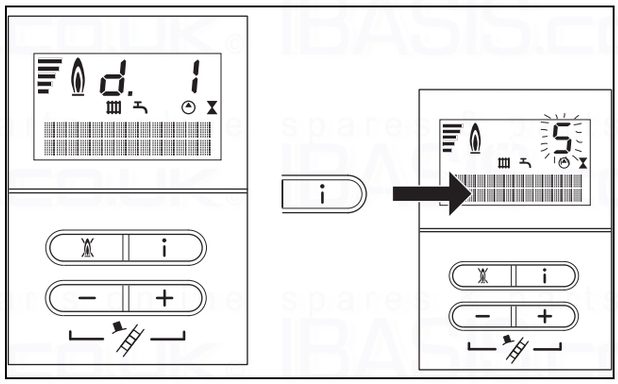

- ► Press the **i** button.
  - ◁ The display will show the associated diagnostic information.

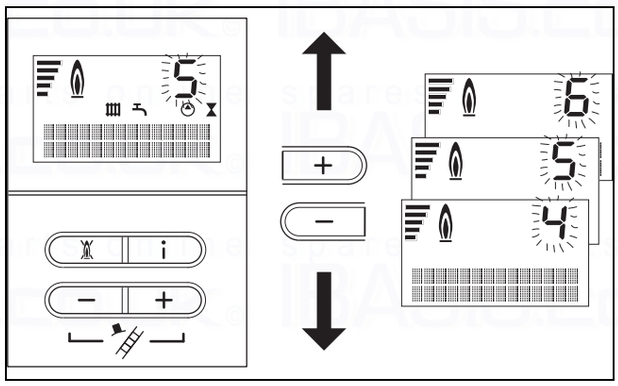

- ► If required, use the **–** or **+** button to set the required value (display will flash).

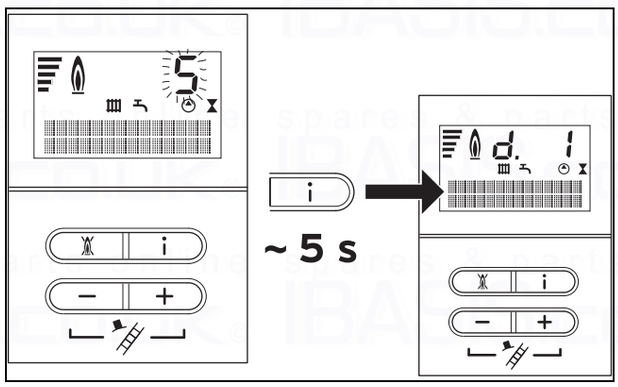

- ► Press and hold the **i** button for 5 seconds (until the display stops flashing) to save the value.

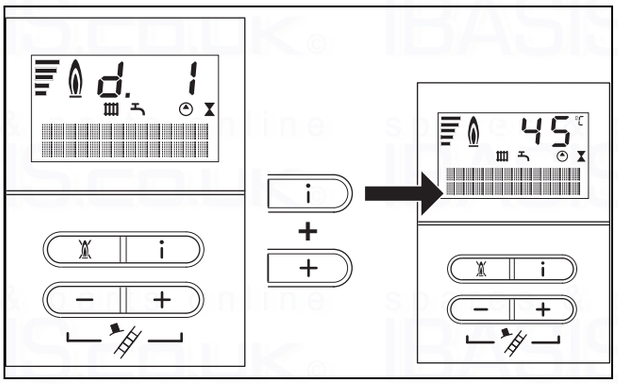

► Press the **i** and **+** buttons simultaneously or wait 4 minutes before pressing any buttons.

◁ The current heating flow temperature or (if this option has been selected) heating installation filling pressure will reappear on the display.

8.2 Setting the maximum flow temperature

You can set the maximum flow temperature for heating mode under **D.71**.

You can set the maximum flow temperature for cylinder charging mode under **D.78**.

8.3 Setting the pump overrun and pump operating mode

You can set the pump overrun time under **D.01**.

You can set the pump overrun for a cylinder charging pump that is directly connected to the product under **D.72**.

If the cylinder charging pump is connected to a VRC 630/700 or VRS 620 control, set the overrun time on the control.

You can set the **Eco** (intermittent) or **Comfort** (continuous) pump operating modes under **D.18**.

In **Comfort** mode, the external heat generator pump is switched on if:

– The room temperature control requests heat via terminal 3-4-5 **and**
– The room temperature control or built-in control specify a target value for the flow temperature via terminal 7-8-9 that is greater than 30 °C or via eBUS that is greater than 20 °C **and**
– The product is in winter mode (the rotary knob for the heating flow temperature is not at the anti-clockwise end stop) **and**
– The surface-mounted thermostat is closed.

The pump is switched off if:

– One of the above-mentioned conditions is no longer being met **and**
– The pump overrun has ended.

The burner anti-cycling time has no effect on the pump. If one of these conditions is missing during the overrun time, this time ends regardless.

Eco is useful for removing residual heat after domestic hot water generation when the heat demand is extremely low and large target temperature spreads exist between the domestic hot water generation and heating mode target values. This prevents living rooms from being under-supplied.

If there is a heat demand, the pump is switched on for five minutes within 30 minutes in each case once the overrun time has elapsed .

If a temperature sensor is connected in the return:

If the return temperature for the heating water drops rapidly, the pump runs (within those 30 minutes) for longer than the minimum running time of five minutes. The "intermittent" operating mode can be interrupted at any time by starting the burner, and the pump runs in the normal heating mode.

8.4 Setting the burner anti-cycling time and partial load

To prevent frequent switching on and off of the burner and thus prevent energy losses, an electronic restart lockout is activated for a specific period each time the burner is switched off. You can adjust the burner anti-cycling time to the conditions of the heating installation. The burner anti-cycling time is only active for the heating mode. You can set the maximum burner anti-cycling time under **D.02**.

The product is equipped with an automatic heating and cylinder charging partial load control. If diagnostics codes **D.00** or **D.77** are at the maximum value, the relevant partial load is optimised using the current burner running times. After an interruption in the mains voltage supply or after the **fault clearance** key is pressed, the value that is currently determined is reset to the maximum output in order to ensure that setting and test processes can take place. The heating partial load can be fixed under **D.00** and the cylinder partial load can be fixed under **D.77**. The automatic function is then not active if a value smaller than the maximum value is set.

8.5 Start-up behaviour

When there is a heat requirement, the product goes into the status **S.02** (pump pre-run) for approx. 15 seconds and then the fan is started (**S.01 ... S.03**).

After reaching the start-up speed, the gas valve is opened and the burner starts (**S.04**).

The product is now operated at minimum output for 30 to 60 seconds, depending on the boiler temperature. Depending on the target value deviation, the calculated target speed is then set.

8.6 Handing the product over to the operator

1. When you have finished the installation, attach the sticker supplied (835593) to the front of the product in the operator's language.
2. Explain to the operator how the safety devices work and where they are located.
3. Inform the operator how to handle the product. Answer any questions the operator may have. Draw special attention to the safety instructions which the operator must follow.
4. Inform the operator of the necessity to have the product maintained according to the specified intervals.
5. Pass all of the instructions and documentation for the product to the operator for safe-keeping.
6. Inform the operator about measures taken to ensure the supply of combustion air and flue gas guiding, and instruct the operator that he must not make any changes.
7. Make the operator aware of the need to keep the instructions near the product.

8. Explain to the operator how to check the required system pressure and the measures for filling and purging the heating installation, where required.
9. Instruct the operator that, when filling the heating installation, the local water quality must be taken into account.
10. Inform the operator of the correct (efficient) settings for temperatures, controllers, and thermostatic radiator valves.

9 Inspection and maintenance

► Disconnect the product from the power mains.

Note
If inspection and maintenance work is necessary when the main switch is switched on, this is indicated in the description of the maintenance work.

► Close the gas isolator valve.
► Remove the front casing. (→ Page 10)
► Carry out all inspection and maintenance work in the order shown in the table "Overview of inspection and maintenance work".
Inspection and maintenance work – Overview (→ Page 34)

9.1 Observing inspection and maintenance intervals

Proper regular inspections and maintenance (once a year) combined with the exclusive use of genuine spare parts are decisive factors in ensuring smooth operation and long working life for the product.

We recommend taking out an inspection and maintenance contract.

Inspection

The inspection is intended to determine the actual condition of the product and compare it with the target condition. This is done by measuring, checking and observing.

Maintenance

Maintenance is required in order to eliminate any deviations of the actual condition from the target condition. This is normally done by cleaning, setting and, if necessary, replacing individual components that are subject to wear.

9.2 Procuring spare parts

The original components of the product were also certified by the manufacturer as part of the declaration of conformity. If you use other, non-certified or unauthorised parts during maintenance or repair work, this may void the conformity of the product and it will therefore no longer comply with the applicable standards.

We strongly recommend that you use original spare parts from the manufacturer as this guarantees fault-free and safe operation of the product. To receive information about the available original spare parts, contact the contact address provided on the reverse of these instructions.

► If you require spare parts for maintenance or repair work, use only the spare parts that are permitted for the product.

9.3 Checking the CO/CO_2 ratio

Note
Checking/adjustment of the CO/CO_2 Ratio is required in the following instances:

- replacement of gas valve.
- or if an incorrect combustion is suspected
- during annual maintenance

1. Make sure that there is an opening for the CO/CO_2 measurement in the flue pipe. Connect a suitable flue gas analyser to this opening to establish the combustion performance of the boiler.

Note
The maximum draught should not exceed 20 Pa, as otherwise the results of the CO/CO_2 measurement in minimum load will be invalid. If necessary you can remove the cover of the inspection opening in the external exhaust gas ducting during the measurement. Then replace it after the measurement.

2. Remove the front casing.
3. Start the testing program **P.1** for full mode (→ Page 15).
   – Wait at least 5 minutes until the boiler reaches its operating temperature.
4. Measure the CO/CO_2 Ratio at the flue pipe. Compare the measured value with the corresponding value:

Settings for VKK GB 806/3-E R1 - VKK GB 2806/3-E R1	Unit	Natural gas (H) Tolerance
CO_2 after 5 minutes full load mode (P.1)	Vol.–%	9.3 ±0.2
CO_2 after 5 minutes minimum load mode (P.2)	Vol.–%	9.0 ±0.2
Set for Wobbe index W_s	kWh/m³	15.0
CO value with full load	ppm	< 200
CO/CO_2		< 0.0023

5. Start the testing program **P.2** for minimum load.
   – Wait at least 5 minutes until the boiler reaches its operating temperature.
6. Measure the CO/O_2 Ratio at the flue pipe. Compare the measured value with the corresponding value.
7. If all these points are as required, leave the test mode.
8. If one of the flue gas values is greater than the acceptable values then proceed as described in the following.

9.4 Adjusting the CO/CO_2 ratio

Danger!

Increased risk of poisoning due to incorrect settings!

Incorrect setting may increase the risk of poisoning. If one of the flue gas values is greater than the acceptable values then check:

- the integrity of the complete flue gas installation.
- the integrity of the combustion circuit seals.
- the gas inlet working pressure.
- the gas flow rate.

1. If the flue gas value at maximum load has to be adjusted:

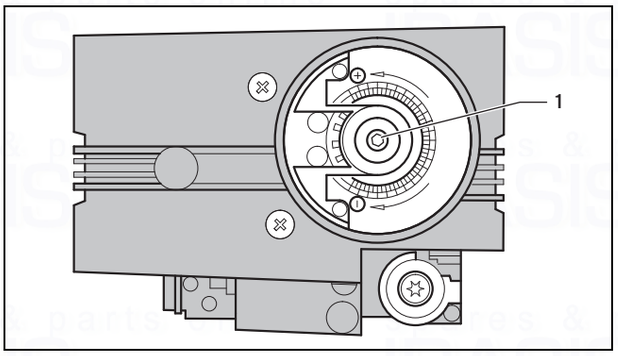

2. Remove the black cover cap to reach the screw of the main throttle on gas valve **(1)**.
3. Be sure that the boiler is running in P.1 for full load. (→ Page 15)
4. Specify the required flue gas value if necessary by turning the screw of the main throttle **(1)**.

Settings for VKK GB 806/3-E R1 - VKK GB 2806/3-E R1	Unit	Natural gas (H) Tolerance
CO_2 after 5 minutes full load mode (P.1)	Vol.–%	9.3 ±0.2
CO_2 after 5 minutes minimum load mode (P.2)	Vol.–%	9.0 ±0.2
Set for Wobbe index W_s	kWh/m³	15.0
CO value with full load	ppm	< 200
CO/CO_2		< 0.0023

5. Use a 3 mm hexagon socket spanner to turn the screw.
   - Turn to the left: higher CO_2 concentration
   - Turn to the right: lower CO_2 concentration.

Note

Only perform the adjustment in increments of 1/8 turn and wait approximately 1 minute after each adjustment until the value stabilises.

6. After performing the adjustments, check the CO_2 concentration in minimum load.
7. If the flue gas value in minimum load needs to be adjusted:

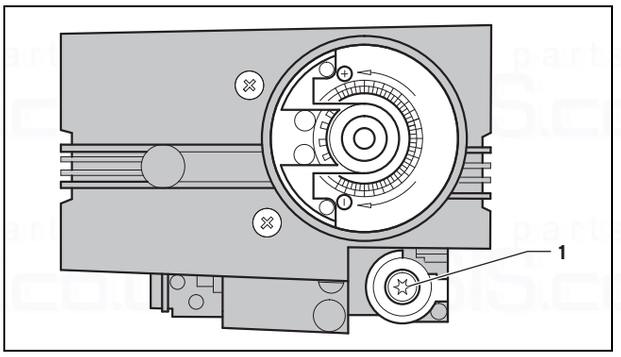

8. Remove the cover cap of the zero point screw **(1)** on the gas valve.
9. Be sure that the boiler is running in **P.2** for full mode.
   - The full load mode is also deactivated if no button is pushed for 15 minutes.
10. Specify the required flue gas value if necessary by turning the screw of the zero point **(1)**.
11. Use a Torx Tx40 socket spanner to turn the screw.
    - Turn to the right: higher CO_2 concentration
    - Turn to the left: lower CO_2 concentration.

Note

The adjustment is very sensitive. Only perform the adjustment in increments of 1/16 turn. Wait approximately one minute after each adjustment until the value stabilises.

12. After performing the adjustments, push the **i** button to deactivate the minimum load mode.
    - The minimum load mode is also deactivated if no button is pushed for 15 minutes.
13. Fit the cover caps on the gas valve.
14. The cover caps shall be sealed after the adjustment.

Danger!

Risk to life due to poisoning!

CO is an extremely toxic gas. Risk to life due to excessive CO concentrations.

- If you are not able to adjust the boiler correctly and the flue gas values remain higher than allowed call the Vaillant Customer Service Centre.
- Do not start up the boiler.

15. Put the front casing back on.

9.5 Removing the burner assembly

Danger!
Risk of being burned or scalded by hot components!

The burner assembly and all water-carrying components present a risk of burns and scalding.

► Only carry out work on these components once they have cooled down.

1. Swing the electronics box down.

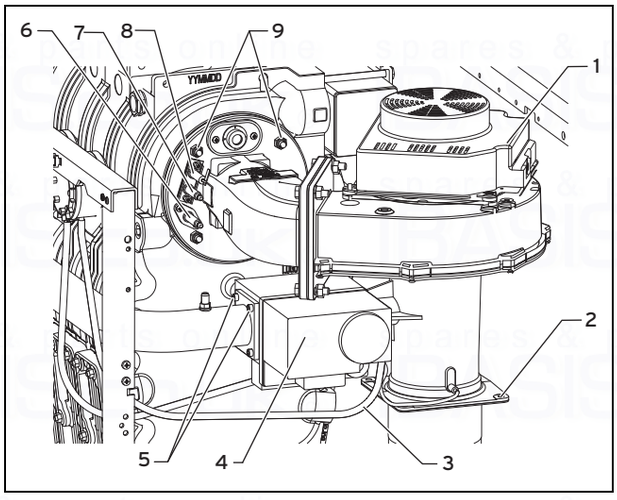

2. Remove the connection cables from the gas valve assembly **(4)** and from the fan **(1)**.
3. Remove the earth wire **(8)**.
4. Remove the plug from the ignition electrode **(7)** and from the monitoring electrode **(6)**.
5. Remove the control hoses **(3)** from the gas valve assembly and the Venturi.
6. Remove the four screws **(2)** between the Venturi and supply-air silencer or high-temperature polypropylene pipe.
7. Carefully put down the supply-air silencer with 87° high-temperature polypropylene elbow.
8. Remove the four M5 screws **(5)** from the gas pipe (gas filter) or from the gas valve assembly.
9. Remove the four M8 nuts **(9)** from the heat exchanger.
10. Pull the entire unit, comprising burner flange, gas valve assembly, fan and Venturi, forwards to remove it, and put it down carefully.
11. Remove the seal between the heat exchanger and burner flange.
12. Carefully pull the burner forwards to remove it.
13. Check the components of the burner assembly and the heat exchanger for damage and dirt.
14. If necessary, clean or replace the components in accordance with the following sections.

9.6 Cleaning the combustion chamber

1. Protect the electronics box from splashed water.
2. Use water and a cleaning brush to clean the combustion chamber.
3. Use water to rinse off the dirt that has softened up.
   ◁ The water drains out via the flue gas collector and the condensate discharge pipe.

9.7 Cleaning the burner

1. Remove the burner assembly. (→ Page 24)
2. Do not use any pointed or sharp objects for cleaning in order to avoid damaging the surface of the burner.
3. Blow out the burner outside the installation room from outside to inside using compressed air. If no compressed air is available, you can also rinse the burner out with water as an alternative. Replace the burner if it is particularly dirty.
4. Install the burner assembly. (→ Page 24)

9.8 Installing the burner assembly

Danger!
Risk of death caused by escaping flue gas!

A defective combustion chamber seal may impair the operational safety of the product and lead to personal injury and material damage.

► Replace the combustion chamber seal after any inspection and maintenance work.

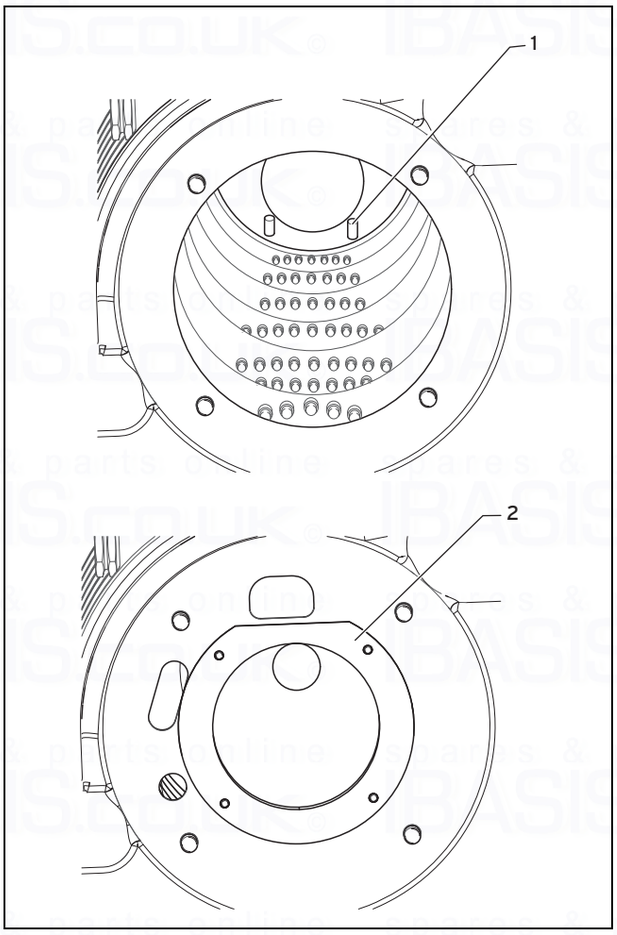

1. Install all of the components in reverse order to how they were removed (→ Page 24).
2. When inserting the burner, ensure that the burner is positioned on the rear guide grooves **(1)** in the heat exchanger and that the front plate **(2)** is flush with the heat exchanger.
3. Tighten the bolts on the elbow evenly to 12 Nm.
4. Open the gas isolator cock and check that it is gas-tight up to the gas valve.
5. Switch on the floor-standing gas-fired high-efficiency boiler.
6. Use a detector to check that the gas-air mixture cannot leak out after the gas valve and along all of the burner seals.
7. If required, tighten the bolts to 12 Nm.

9.9 Replacing electrodes

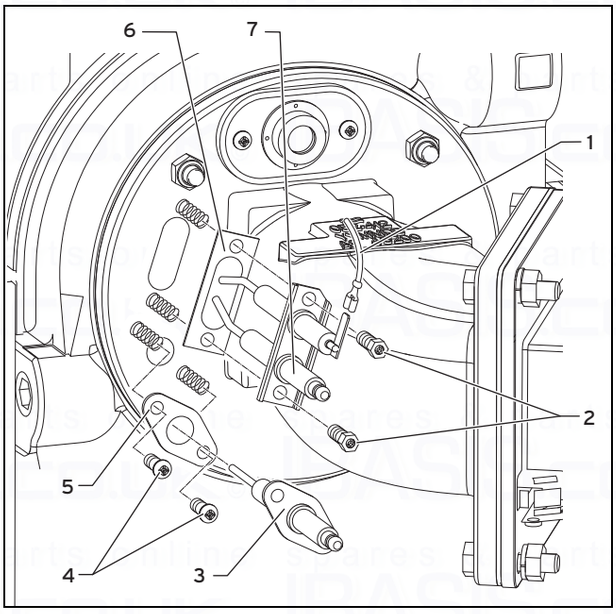

1. Carefully remove the earth line **(1)** from the counter electrode and the ignition line from the ignition electrode **(7)**.
2. Remove both fixing nuts **(2)** from the ignition electrode and remove the ignition electrode.
3. Replace the seal **(6)** and install the new ignition electrode.
4. Carefully remove the ignition line from the monitoring electrode **(3)**.
5. Remove both fixing nuts **(4)** from the monitoring electrode and remove the monitoring electrode.
6. Replace the seal **(5)** and install the new monitoring electrode.
7. Tighten the fixing nuts **(2)** and **(4)** to 2 Nm and connect the connection cables.

9.10 Cleaning the condensate collector

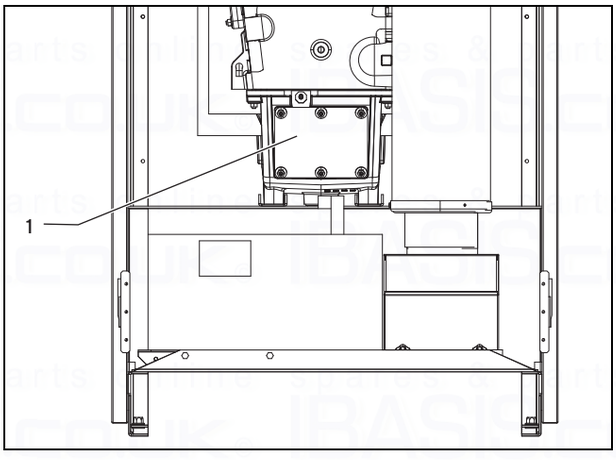

1. Remove the nuts from the cover on the inspection opening **(1)**.
2. Remove the cover from the inspection opening.
3. Check the condensate collector for dirt and clean it using a scraper if necessary.
4. Check the seal on the inspection opening for damage. Replace any damaged seals.

5. Refit the cover on the inspection opening.
6. Retighten the nuts.

9.11 Cleaning the condensate siphon

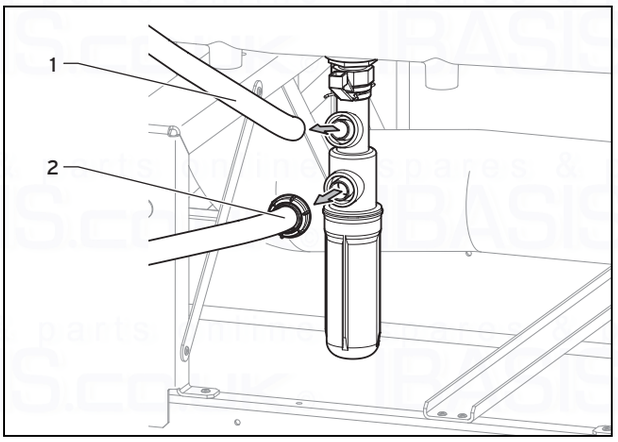

1. Remove the condensate discharge pipe **(1)** from the condensate trap.
2. Remove the drain hose **(2)**.

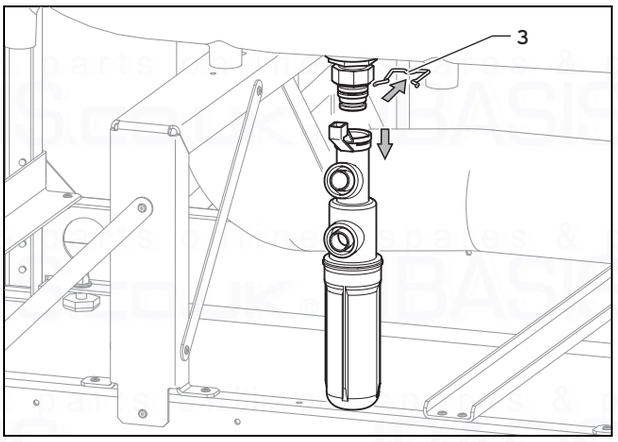

3. Remove the bracket **(3)**.
4. Remove the siphon and clean it.
5. Install the siphon in reverse order.
6. Fill the condensate siphon with approx. 1.5 litres of water via the condensate discharge pipe.
7. Slide the condensate discharge pipe back onto the condensate trap.
8. Reseal the opening in the flue gas measurement opening with the plug.

9.12 Checking the flue gas pressure monitor

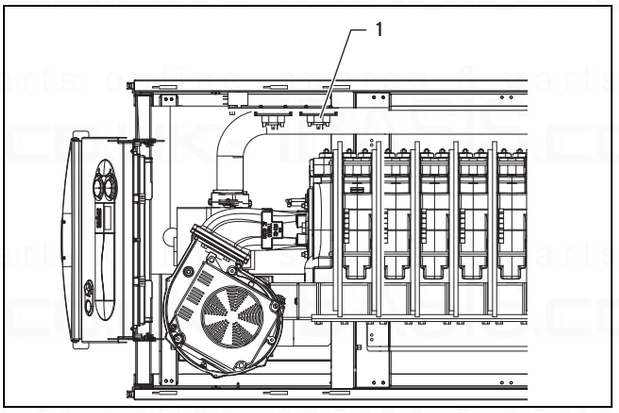

1. Remove the hose from the flue gas pressure monitor **(1)** and from the connection on the flue spigot above the inspection opening in the condensate tray.
2. Check the hose for dirt. Clean it by blowing through it if required.
3. Connect the hose to connection **P1** on the flue gas pressure monitor and to the flue spigot.
4. Ensure that the hose of the flue gas pressure monitor is connected to the correct connection.
5. Ensure that the hose is fully pushed onto the connection.

9.13 Checking the combustion air pressure monitor

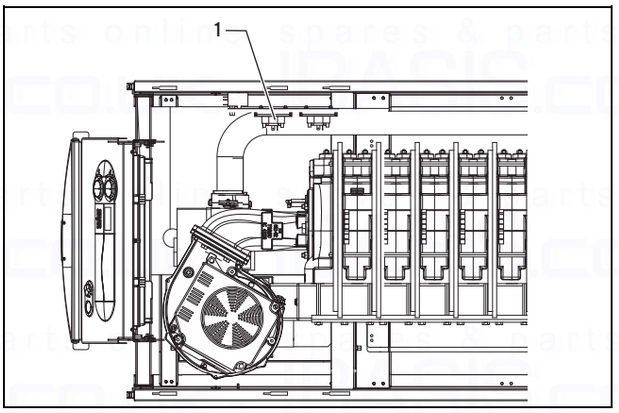

1. Check the hoses leading to the combustion air pressure monitor **(1)** for damage. Clean them by blowing through them if required.

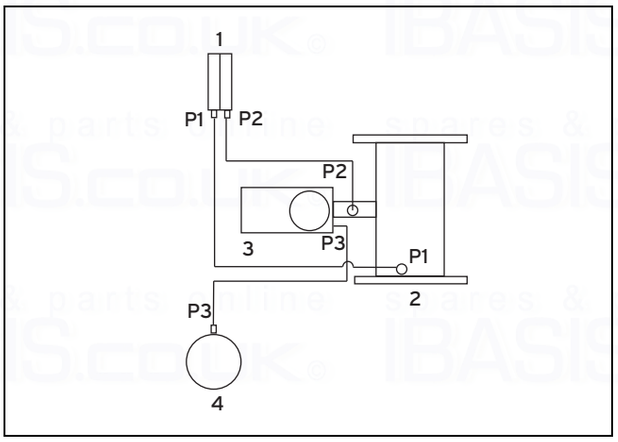

2. Connect hose **P1** of the combustion air pressure monitor **(1)** to the Venturi **(2)**.
3. Connect hose **P2** of the combustion air pressure monitor to the connection between the gas valve assembly **(3)** and Venturi **(2)**.
4. Ensure that the hoses of the combustion air pressure monitor are connected to the correct connections.
5. Ensure that the hoses leading to the combustion air pressure monitor are fully pushed onto the connections.
6. Check the hose between the gas valve assembly **(3)** and supply air box **(4)** for dirt. Clean it by blowing through it if required.
7. Connect hose **P3** to the gas valve assembly and supply air box.
8. Ensure that the hose is fully pushed onto the connection.

9.14 Checking the safety cut-out

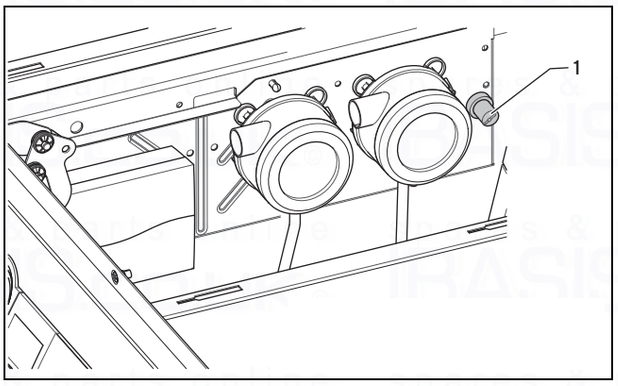

1. Switch on the main switch.
2. Start check programme P.05 (→ Page 15).
   - ◁ The internally connected heating pump is switched off while the safety cut-out is being tested. The check programme starts automatically and triggers the safety cut-out after 5-8 minutes. Otherwise, the check programme is automatically terminated after 15 minutes.
   - ◁ The gas-fired floor-standing condensing boiler switches off at 110 °C (tolerance −6 K).
   - ▽ If the safety cut-out is not triggered at the latest after eight minutes, it is defective. In this case, replace the safety cut-out.
3. After the gas-fired floor-standing condensing boiler has cooled down, press the pin **(1)** to release the safety cut-out.

9.15 Draining the product

1. Close the service valves of the product.
2. Connect a hose to the product's filling and drainage tap.
3. Route the hose to a suitable outflow location.
4. Open the filling and drainage tap.
5. Open the automatic air vent so that the product is completely drained.
6. Once the water has drained out, close the automatic air vent and the filling/draining cock again.

9.16 Draining the heating installation

1. Connect a hose to the filling and drainage tap in the heating flow.
2. Route the hose to a suitable outflow location.
3. Make sure that the product's service valves are open.
4. Open the filling and drainage tap.
5. Open the purging valves on the radiators. Start from the highest radiator and then work from the top to the bottom.
6. Once the water has drained out, close the purging valves of the radiators and the filling and drainage tap.

9.17 Completing inspection and maintenance work

Once you have completed all maintenance work:

- ► Check that all control, regulation and monitoring devices are functioning properly.
- ► Check the gas tightness of the product before each instance of start-up and after each instance of inspection, maintenance and repair.
- ► Check that there are no leaks in the product and the air/flue pipe.
- ► Check the over-ignition and that the flame on the burner is burning properly (diagnostics code d.44: < 250 = excellent flame, > 700 no flame).
- ► Swing the electronics box up.
- ► Install the front casing. (→ Page 10)
- ► Fill out the relevant service record section in the benchmark checklist.

10 Troubleshooting

You can find an overview of the fault codes in the appendix.

Overview of fault codes (→ Page 38)

10.1 Contacting your service partner

If you contact your Vaillant service partner, if possible, please mention

– The fault code that is displayed (**F.xx**),
– The product status that is displayed (**S.xx**).

10.2 Reading off the fault codes

If a fault develops in the product, the display will show a fault code **F.xx**.

Fault codes have priority over all other displays.

If multiple faults occur at the same time, the display shows the corresponding fault codes for two seconds each in sequence.

► Rectify the fault.
► To restart the product, press the **Fault clearance** button (→ Operating instructions).
► If you are unable to remedy the fault and the fault recurs despite several fault clearance attempts, contact Vaillant Customer Service.

10.3 Resetting parameters to factory settings

► To simultaneously reset all parameters to the default settings, set **d.96** to 1.

10.4 Unlocking the product after it has been switched off by the safety cut-out

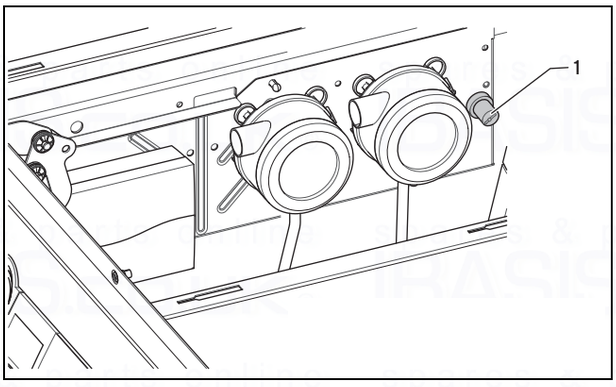

If fault code **F.20** is displayed, the safety cut-out has automatically switched off the product because the temperature is too high.

► Remove the front casing. (→ Page 10)
► Remove the covering cap and press the pin **(1)** to unlock the safety cut-out. You can only press down on the pin once the temperature of the product is < 80 °C.
► After the safety cut-out is triggered, always carry out troubleshooting and eliminate the cause of the fault.

10.5 Fault in the product

Danger!
Risk of death from electric shock!
Touching live connections may cause serious personal injury.

► Switch off the power supply.
► Secure the power supply against being switched on again.

Not shown in the display

If the product does not start up and nothing is shown in the display on the operator control panel, check the following points first:

– Is 230 V/50 Hz present at the turquoise-coloured plug?
– Is the main switch switched on?

► Check and, if required, replace fuse 4 AT on the PCB in the electronics box.

The product does not respond to a VRC 470, 630, VRS 620 or VRC 700 control

► Check the connection between the "Bus" connections in the control and the product.

Conditions: VRC 630, VRS 620 or VRC 700

► Switch the control off and on again so that it re-reads the bus participants.

The product does not respond to a two-point control system

► Measure whether the switching contact between terminals 3 and 4 was closed by the external control.
► Place a bridge between terminals 3 and 4. If the product starts up after this, you must check the external control.

The product does not respond to a hot water request

► Check the settings for the control.
► Check the cylinder charging pump.
► Check the settings for the cylinder target value in the DIA system.

11 Decommissioning

11.1 Decommissioning the product

► Switch off the product.
► Disconnect the product from the power mains.
► Close the gas isolator cock.
► Close the cold water stop valve.
► Drain the product via the filling and drainage tap (→ Page 27).

12 Recycling and disposal

12.1 Recycling and disposal

Disposing of the packaging

- Dispose of the packaging correctly.
- Observe all relevant regulations.

13 Vaillant customer service

13.1 Customer service

To ensure efficient and reliable operation of your boiler it is recommended that regular servicing is carried out by your service provider.

Appendix

A System diagram

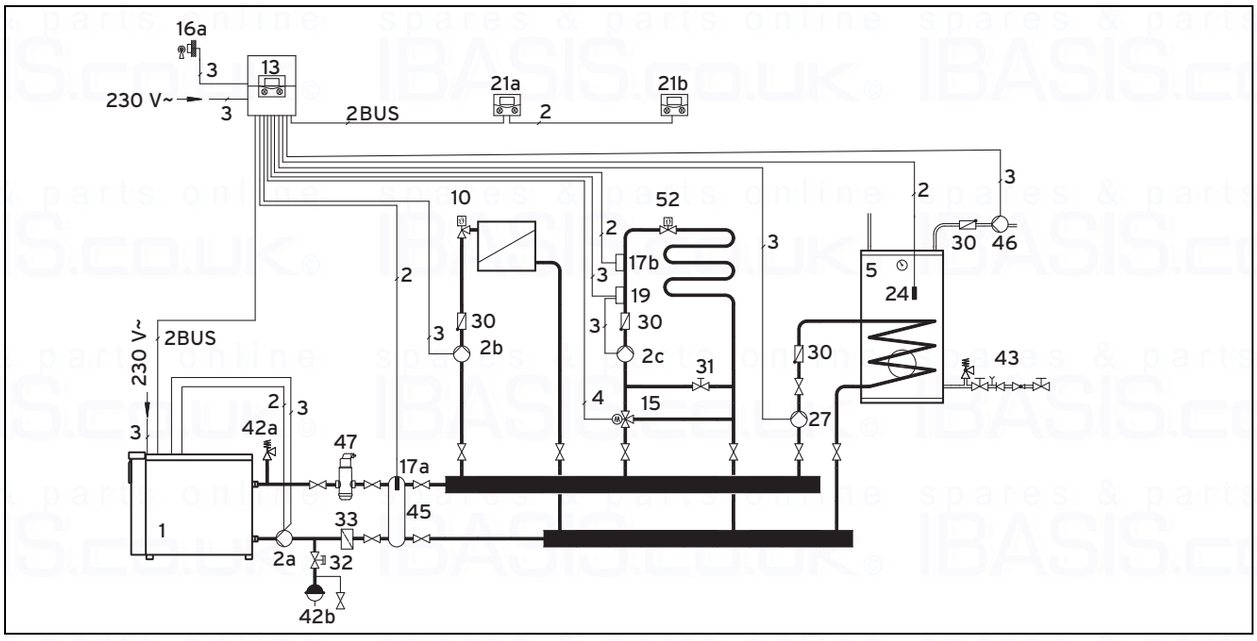

1	Heat generator	21b	Remote control (underfloor circuit)
2a	Heat generator pump in the heat generation circuit	24	Cylinder temperature sensor
2b	Heating pump (heating circuit 1)	27	Cylinder charging pump
2c	Heating pump (mixing circuit 2)	30	Non-return valve
5	Domestic hot water cylinder	31	Flow limiter
10	Thermostatic radiator valve	32	Cap valve
13	Weather compensator	33	Sludge separator
15	3-way mixer	42a	Expansion relief valve
16	outside temperature sensor	42b	Expansion vessel
17a	Flow temperature sensor	43	Safety group
17b	Flow temperature sensor (heating circuit 2, mixing circuit)	45	Low loss header
19	Maximum thermostat	46	Circulation pump
21a	Remote control (radiator circuit)	47	Air separator
		52	Room temperature-controlled valve

B Start-up checklist

No.	Procedure	Comment	Required tool
1	Checking the gas flow pressure	The gas flow pressure relative to the atmospheric pressure must be 1.8-2.5 kPa (18-25 mbar) with G20 natural gases. For natural gas, the gas connection pressure (resting pressure) must not deviate from the gas flow pressure by more than 0.5 kPa (5 mbar).	U tube or digital pressure gauge
2	Check whether the condensate siphon has been filled	If required, fill it via the flue spigot (at least 1.5 l water)	
3	Check the electrical connection	Power supply: Terminals L, N, PE Control terminals: "Bus", or 7-8-9 or 3-4	
4	Switch on the product, the display view is active	Otherwise, check the fuses (4 OT)	
5	Activate the maximum output operation	Press the **+** and **−** buttons at the same time	

No.	Procedure	Comment	Required tool
6	Check the entire gas route for leaks	Leak-detection spray or leak detector (a leak detector is especially recommended for checking the burner seals for gas tightness) If required, tighten the burner seal (tightening torque: 12 Nm)	Leak detector
7	Carrying out a chimney draught measurement	The maximum draught must not exceed 20 Pa. If the draught is too great, the chimney draught must be restricted using suitable measures.	Measuring instrument for chimney draught
8	CO_2 measurement	Target value for nominal heat loading: Only carry out the measurement after five minutes of normal operation – 9.3 vol.% ±0.2 with natural gas H Target value for the minimum heat load: – 9.0 vol.% ±0.2 with natural gas H	CO_2-measuring instrument
9	If the CO_2 is not within the tolerance:	Adjust the CO_2 and then take the measurement again	
10	After setting the CO_2, activate chimney sweep mode again and measure the CO_2 content	Target value for nominal heat loading: – 9.3 vol.% ±0.2 with natural gas H Target value for the minimum heat load: – 9.0 vol.% ±0.2 with natural gas H	CO_2-measuring instrument
11	CO measurement (target value < 80 ppm)		CO measuring instrument
12	Check the condensate tray, condensate siphon and condensate discharge for leak-tightness	Carry out a visual check or also use a CO measuring instrument to go along the sealing points.	
13	Switching off the product and switching it back on again	End the maximum output operation	
14	Programme the heating controller with the customer and check that the hot water/heating are working correctly	Handing over the operating instructions to the customer	
15	Stick sticker 835593 "Read the operating instructions" on the front of the product, in the language spoken by the end user		

C Overview of diagnostics codes

Note
Since the code table is used for various products, some codes may not be visible for the product in question.

Code	Parameter	Values or explanations	Default setting	Own setting
D.00	Heating partial load, adjustable values in kW	Maximum value = nominal heat output	Automatic heating partial load	
D.01	Heating pump overrun time	2 … 60 min	5 min	
D.02	Max. burner anti-cycling time heating at 20 °C flow temperature	2 … 60 min	20 min	
D.04	Measured value for the cylinder temperature in °C	If a domestic hot water cylinder with sensor is connected		
D.05	Flow temperature target value (or return target value) in °C	Current target value, calculated from the set value, controller, control type, etc.		
D.07	Target cylinder temperature	(15 °C = frost protection, 40 °C up to D.20 (max. 70 °C))		
D.08	Room thermostat at terminal 3-4	0 = Open, no heating mode; 1 = Closed, heating mode		Not adjustable

Code	Parameter	Values or explanations	Default setting	Own setting
D.09	Target flow temperature in °C from the external continuous controller to terminal 7-8-9/eBUS	Minimum from the external eBUS target value and target value for terminal 7		Not adjustable
D.10	Heating pump status	0 = Off 1 = On		Not adjustable
D.11	Status of additional external heating pump	0 = Off 1-100 = On Connection via the 2 in 7 multi-functional module		Not adjustable
D.12	Status of cylinder charge pump	0 = Off 1-100 = On		Not adjustable
D.13	Status of circulation pump	0 = Off 1-100 = On Connection via the 2 in 7 multi-functional module		Not adjustable
D.14	Setting for speed-controlled heating pump	Adjustment range: - = auto, 20 ... 100% fixed value setting	–	
D.15	Current pump output for the speed-controlled heating pump in %			
D.17	Control type	0 = Flow temperature control 1 = Return temperature control	0	
D.18	Pump operating mode (overrun)	1 = Overrun (comfort) 3 = Continuous (eco)	1	
D.20	Max. setting for cylinder target value	Adjustment range: 50 - 70 °C	65 °C	
D.22	External cylinder charging, plug C1-C2	1 = on, 0 = off		
D.23	Summer/winter mode (heating off/on)	0 = Heating off (Summer mode) 1 = Heating on		
D.24	Differential pressure sensor	0 = Contact open, 1 = Contact closed		Not adjustable
D.25	Cylinder charging/warm start enabled by warm start clock control/timer:	1 = Yes, 0 = No	1	
D.26	Internal accessory relay at X6 (pink plug)	1 = Circulation pump 2 = Second external pump 3 = Cylinder charging pump 4 = Flue non-return flap/extractor hood 5 = External gas valve 6 = External fault message	1	
D.27	Switching accessory relay 1 for accessory "2-in-7" multi-functional module	1 = Circulation pump 2 = Second external pump 3 = Cylinder charging pump 4 = Flue non-return flap/extractor hood 5 = External gas valve 6 = External fault message	1	
D.28	Switching accessory relay 2 for accessory "2-in-7" multi-functional module	1 = Circulation pump 2 = Second external pump 3 = Cylinder charging pump 4 = Flue non-return flap/extractor hood 5 = External gas valve 6 = External fault message	2	
D.30	Control signal for gas valves	0 = Off; 1 = On		Not adjustable
D.33	Fan speed target value	in rpm/10		Not adjustable
D.34	Fan speed actual value	in rpm/10		Not adjustable
D.40	Flow temperature	Actual value in °C		Not adjustable
D.41	Return temperature	Actual value in °C		Not adjustable

Code	Parameter	Values or explanations	Default setting	Own setting
D.43	Floor-standing boiler temperature			Not adjustable
D.44	Digitised ionisation value	Display field 0 to 1020 > 700 no flame < 450 flame detected < 250 very good flame		Not adjustable
D.47	Outside temperature (with weather compensator)	Actual value in °C, if the outside temperature sensor is connected to X41		Not adjustable
D.50	Offset for minimum speed	In rpm/10, adjustment range: -40 to +40	Nominal value set in factory	
D.51	Offset for maximum speed	In rpm/10, adjustment range: -40 to +40	Nominal value set in factory	
D.54	Switch-on hysteresis	0-10 K	−2	
D.55	Switch-off hysteresis	0 - 10 K	6	
D.60	Number of temperature limiter shutdowns	Number of shutdowns		Not adjustable
D.61	Number of ignition device cutoffs	Number of unsuccessful ignitions in the last attempt		Not adjustable
D.63	Number of air-monitoring switch-off sequences	Number of shutdowns		Not adjustable
D.64	Average ignition time	In seconds		Not adjustable
D.65	Maximum ignition time	In seconds		Not adjustable
D.67	Remaining burner anti-cycling time	In minutes		Not adjustable
D.68	Unsuccessful ignitions at 1st attempt	Number of unsuccessful ignitions		Not adjustable
D.69	Unsuccessful ignitions at 2nd attempt	Number of unsuccessful ignitions		Not adjustable
D.71	Maximum target value heating flow temperature	40 … 85 °C	75 °C	
D.72	External heating pump overrun after cylinder charging	Adjustable from 0 to 600 seconds	300 s	
D.73	Cylinder charging offset, raising the temperature between the target cylinder temperature and the target flow temperature when cylinder charging	0 - 25 K	25 K	
D.75	Max. charging time for domestic hot water cylinder without independent control system	20 - 90 min	45 minutes	
D.76	Floor-standing boiler type	14 = ecoCRAFT		Not adjustable
D.77	Limit on cylinder charging output in kW	Adjustable cylinder charging output in kW Maximum value = nominal heat output	Automatic cylinder partial load	
D.78	Cylinder charging temperature limit (target flow temperature in cylinder charging mode) in °C	55 °C-85 °C	80 °C	

Code	Parameter	Values or explanations	Default setting	Own setting
D.80	Operating hours, heating	In hours (h)	After pressing the **i** button once, the first three numbers are displayed; after pressing the **i** button a second time, the second three numbers of the six-digit number (burner starts x 100) are displayed.	Not adjustable
D.81	Operating hours, hot water generation	In hours (h)		
D.82	Number of burner start-ups in heating mode	Number of burner start-ups (x 100)		
D.83	Number of burner start-ups in hot water mode	Number of burner start-ups (x 100)		
D.84	Maintenance indicator: Number of hours until the next maintenance	Adjustment range: 0 to 3000 hrs and "---" for deactivated 300 equals 3000 hrs	„---"	
D.87	Gas type setting	Adjustment range: 0 = Natural gas	0	
D.90	Status of digital controller	0 = Not recognised (eBUS address ≤ 10) 1 = Recognised		Not adjustable
D.91	Status of DCF with external temperature sensor connected	0 = No reception 1 = Reception 2 = Synchronised 3 = Valid		Not adjustable
D.93	Unit variant setting (DSN)	80 kW: 0 120 kW: 1 160 kW: 2 200 kW: 3 240 kW: 4 280 kW: 5		
D.95	Software version of the eBUS components	1. PCB (BMU) 2. Display (AI)		Not adjustable
D.96	Default setting	Reset all adjustable parameters to factory setting 0 = No 1 = Yes	0	
D.97	Activating the installer level	Service code 17		
D.98	Telephone number in the plain text display	Input option for the telephone number that you want to display if a fault occurs		
D.99	Language for the plain text display			

D Inspection and maintenance work – Overview

Note

The table below lists the manufacturer requirements with respect to minimum inspection and maintenance intervals. If national regulations and directives require shorter inspection and maintenance intervals, you should observe these instead of the intervals listed in the table.

No.	Work	Inspection (annual)	Mainten-ance (must be carried out at regular intervals)*
1	Perform a test operation of the product and heating installation, including hot water generation, and purge the system once more if necessary.	X	X
2	Isolate the product from the power mains and close the gas supply.	X	X
3	Remove the front casing.	X	X
4	Carry out a visual check to ensure that the heating circuit is leak-tight, and a functional check of the automatic air vent.	X	X
5	Carry out a visual check of the expansion relief valve. No blockages or pipe connections must be detected at the expansion relief valve. Ensure that the correct expansion relief valve, tundish and line are present. The tundish must be visible. There must be no isolator between the gas-fired floor-standing condensing boiler and the expansion relief valve.	X	X
6	Remove the burner assembly		X
7	Clean the combustion chamber and, in doing so, rinse the condensate siphon.		X
8	Clean the burner and check it for damage.		X
9	Check the distance between the electrodes and between the electrodes and the burner.		X
10	Check the electrodes for deposits. If required, replace the electrodes.		X
11	Check the seals on the condensate tray and on the inspection opening for damage. Replace any damaged seals.	X	X
12	Clean the condensate collector.	X	X
13	Check the hose to the flue gas pressure monitor for dirt and leak-tightness.	X	X
14	Check the hoses leading to the combustion air pressure monitor for dirt and leak-tightness.	X	X
15	Check the dust filter in the supply air box for dirt and damage. If necessary, replace the dust filter.	X	X
16	Reinstall the burner assembly. **Caution: Replace the seal.**		X
17	Check the condensate siphon in the product and, if required, fill the siphon.	X	X
18	Open the gas isolator cock, reconnect the product to the power mains and switch it on.	X	X
19	Check the ignition and combustion behaviour under **D.44**	X	X
20	Check the CO_2 content and adjust this, if required.		X
21	Check the product for gas, flue gas, hot water and condensate leaks, and repair if necessary.	X	X
22	Check all of the safety devices.	X	X
23	Check that the flue gas pressure monitor is working correctly by completely blocking the flue gas with flue gas restrictors. Carry out a visual check of all hoses and measuring nipples.		X
24	Check the control equipment (external controller) and adjust this, if required.	X	X
25	Measure the load.		X
26	Record the inspection/maintenance work carried out.	X	X
27	Install the front casing.	X	X
28	Check and, if required, correct the system pressure.	X	X
29	Check the general condition of the product. Remove any general dirt from the product.	X	X

*Note: For those appliances which are not part of an annual service agreement/policy, maintenance must be carried out at least every 5 years.

*Note: If fitted: Maintenance work must be carried out on the domestic hot water cylinder every five years, irrespective of the heat generator.

E Function menu – Overview

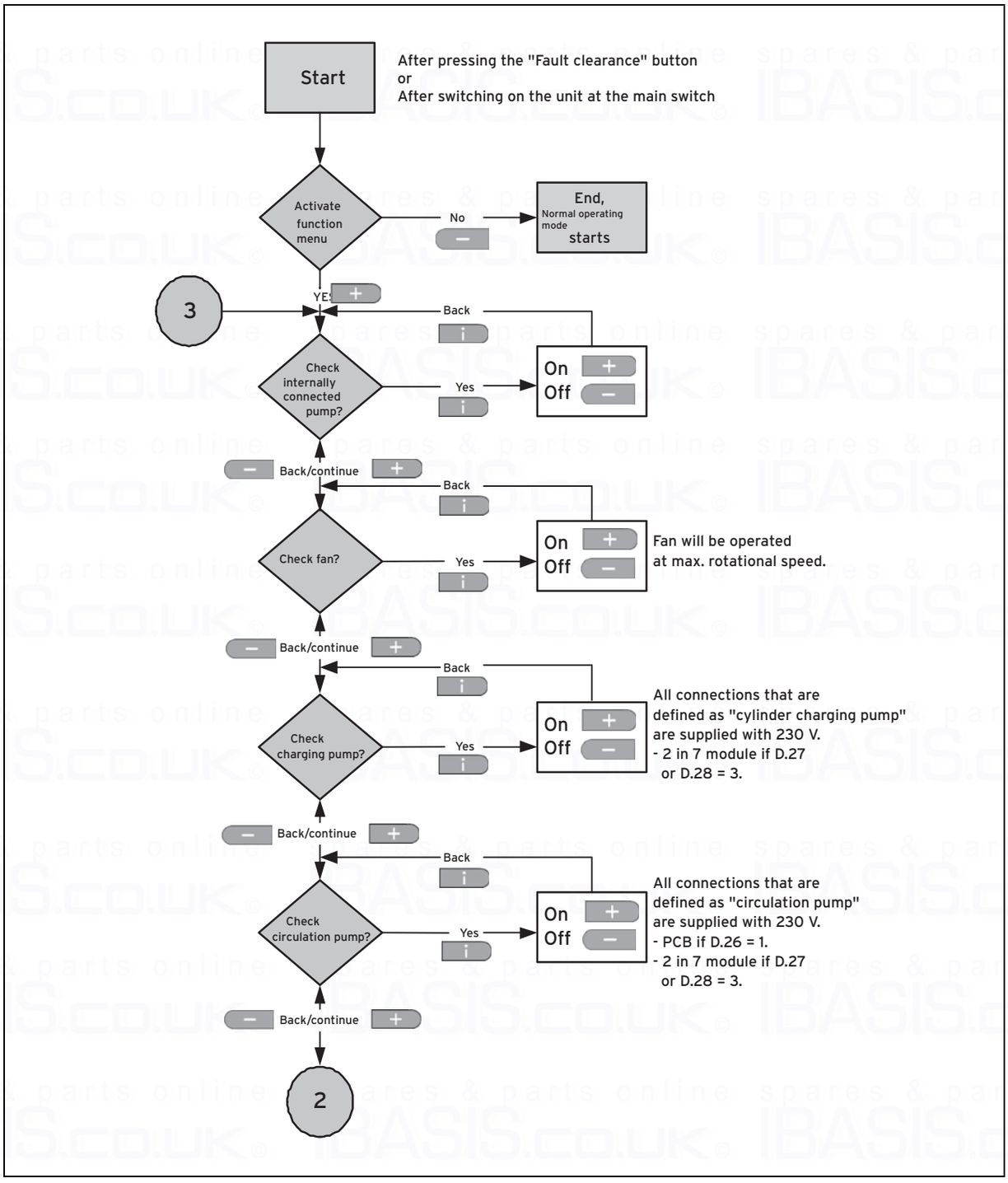

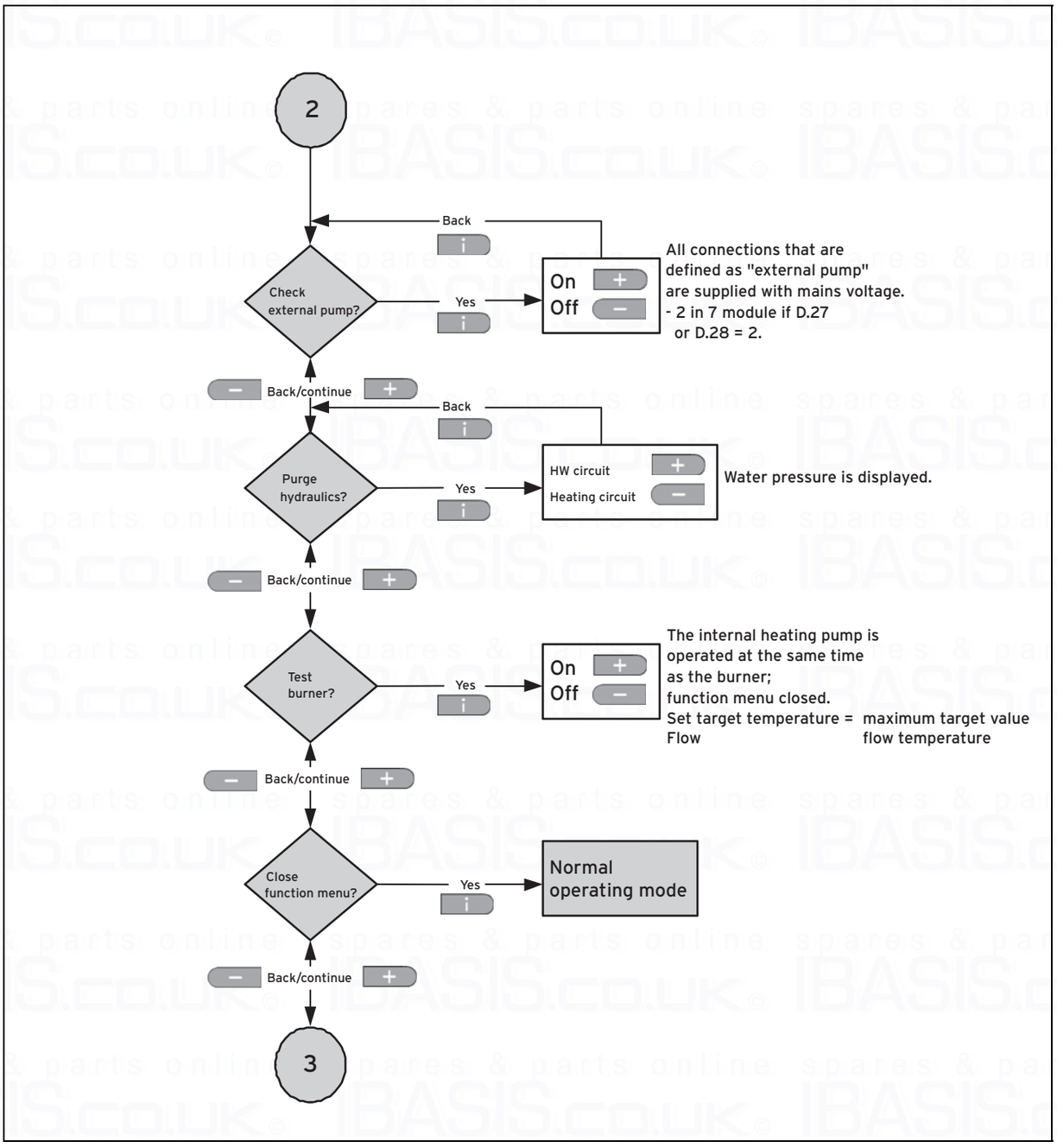

F Status codes – Overview

Status code	Meaning
Heating mode	
S.00	No heat demand
S.01	Advance fan operation
S.02	Pump pre-run
S.03	Ignition
S.04	Burner on
S.06	Fan overrun
S.07	Pump overrun
S.08	Burner anti-cycling time after heating mode
Cylinder charging	
S.20	Pump pre-run

Status code	Meaning
S.23	Ignition
S.24	Burner on
S.26	Fan overrun after cylinder charging
S.27	Pump overrun
S.28	Burner anti-cycling time after cylinder charging (cycle suppression)
Special cases	
S.30	Room thermostat (230/24 V) is blocking heating mode
S.31	Summer mode active or eBUS controller or built-in timer is blocking heating mode
S.32	Waiting period because of fan speed deviation (fan speed deviation still too high)
S.33	Pressure switch waiting period (pressure switch contact has not yet closed)
S.34	Frost protection mode active
S.35	Speed ramp waiting period (speed deviation at start of the ramp)
S.36	Target value for the eBUS control < 20 °C, i.e. the external control is blocking heating mode
S.39	Contact thermostat tripped
S.40	Limp home mode display active; product runs in restricted comfort protection mode. Corresponding fault code is displayed alternately with the status message
S.41	System pressure on the water side is too high
S.42	– Feedback of the flue non-return flap blocks burner operation (only in conjunction with accessories) – Condensate pump defective -> Requirement is blocked
S.49	Siphon pressure switch has been triggered, waiting period
S.59	Minimum volume of circulation water not achieved (block temperature is too high)
S.60	Waiting period after the flame goes out

G Overview of fault codes

Code	Meaning	Cause
F.00	Flow temperature sensor interruption	Cable interrupted, cable not plugged in, sensor defective
F.01	Return temperature sensor interruption	Cable interrupted, cable not plugged in, sensor defective
F.10	Flow NTC short circuit	Cable short-circuited to earth or sensor defective
F.13	Cylinder temperature sensor short circuit	Cable short-circuited to earth or sensor defective
F.20	Safety switch-off: Temperature limiter	Air in the heat exchanger, combined with F.00 "Flow temperature sensor defective"
F.22	Safety switch-off: Low water pressure	Water pressure below 0.03 MPa (0.3 bar)
F.23	Temperature spread in the cast-iron heat exchanger is too high because the water circulation volume is too low	Pump blocked or defective Pump does not have enough power Installation throttled without low loss header
F.24	The temperature increases too quickly at the block or flow temperature sensor	Pump blocked or defective Pump does not have enough power Installation throttled without low loss header
F.27	"Secondary light"	Flame is detected when the gas valve is closed, electronics fault
F.28	Failure during start-up: Ignition unsuccessful	Gas supply missing, electrodes bent, defective or dirty, gas valve defective
F.29	Failure during operation: Re-ignition unsuccessful	Fault in the gas supply, gas valve defective, flue pipe not installed correctly (flue gas recirculation)
F.30	Interruption of the floor-standing boiler temperature sensor	Cable interrupted, cable not plugged in, sensor defective
F.31	Short circuit in the floor-standing boiler temperature sensor	Cable short-circuited to earth or sensor defective
F.32	Speed deviation too great, fan speed outside of the tolerance	Cable harness fault, fan fault
F.33	Pressure switch does not switch on	Burner is heavily soiled; supply-air filter is heavily soiled
F.34	Pressure switch does not switch off (if there is a fan)	Pressure switch defective, condensate in the measuring hose
F.37	Speed deviation during operation	Fan defective, or there is an electronics fault

Code	Meaning	Cause
F.42	Short circuit in coding resistor	Short circuit in coding resistor or cable harness fault
F.43	Interruption in coding resistor	Interruption in coding resistor or cable harness defective
F.49	Fault: eBUS	Short circuit on eBUS, eBUS overload or two power supplies with different polarities on the eBUS
F.50	Fault in the flue gas pressure switch	Flue gas installation blocked, condensate siphon blocked or condensate discharge blocked or routed on an incline
F.60	Fault: Gas valve regulation +	Electronics defective
F.61	Fault: Gas valve regulation –	Electronics defective
F.62	Fault: Gas valve switch-off delay	– Delayed shutdown of gas valve – Delayed extinguishing of flame signal – Gas valve leaking – Electronics defective
F.63	Fault: EEPROM	Electronics defective
F.64	ADC fault	Electronics defective or short circuit in the flow temperature sensor
F.65	Fault: Electronics temp.	Electronics overheating due to external influences, electronics defective
F.66	Electronics fault	Electronics defective
F.67	Fault: Electronics/flame	Implausible flame signal, electronics defective
F.70	Invalid device specific number (DSN)	Electronics ID and display do not match
F.73	Water pressure sensor signal in the wrong range (too low)	Pressure sensor not connected or it has short-circuited
F.74	Water pressure sensor signal outside correct range (too high)	Pressure sensor defective or there is a cable interruption
Err	Communication fault between the operator control panel and the electronics	The fault clearance key function remains active

H Connection diagrams

H.1 Connection diagram, complete

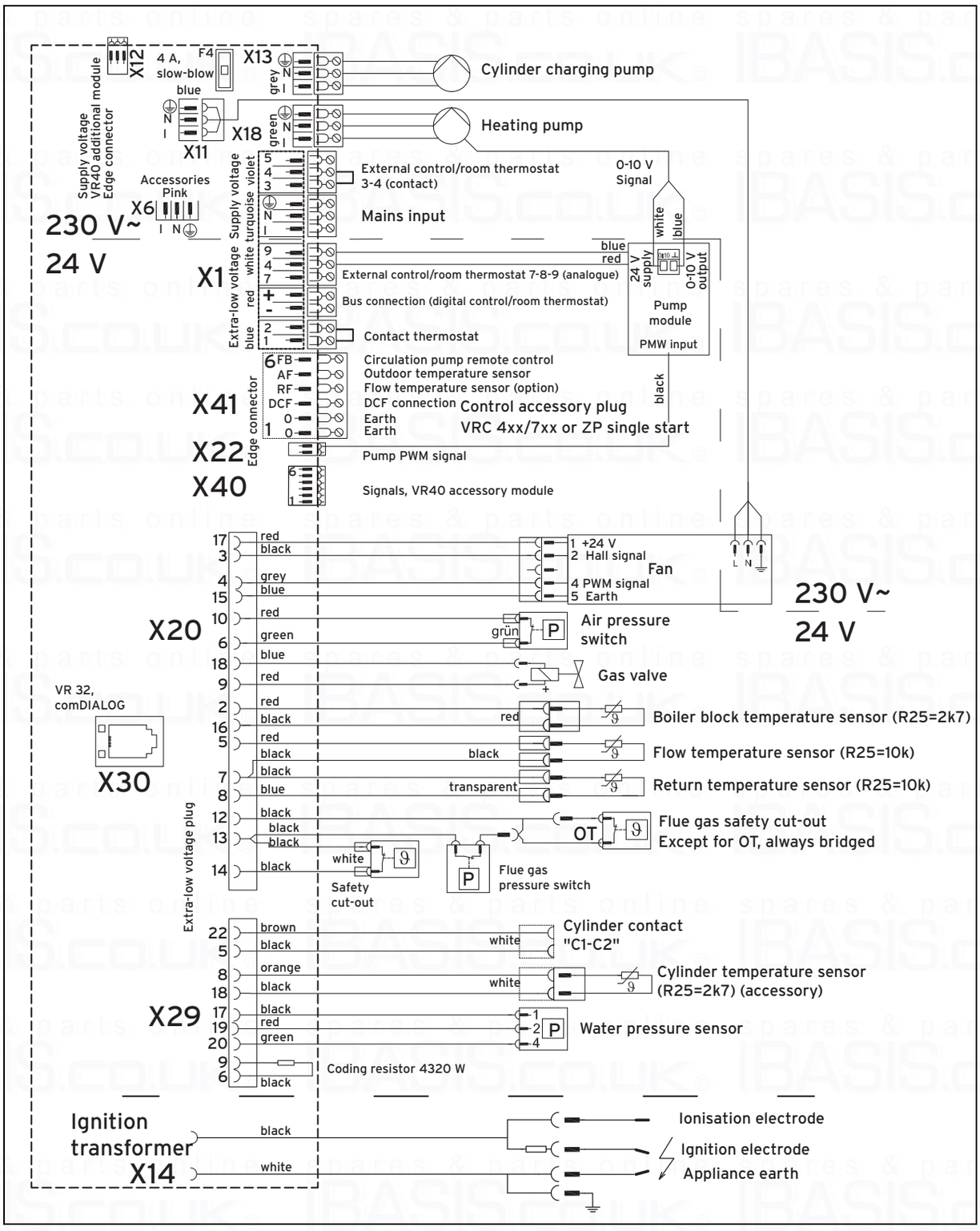

H.2 Connection diagram, extract

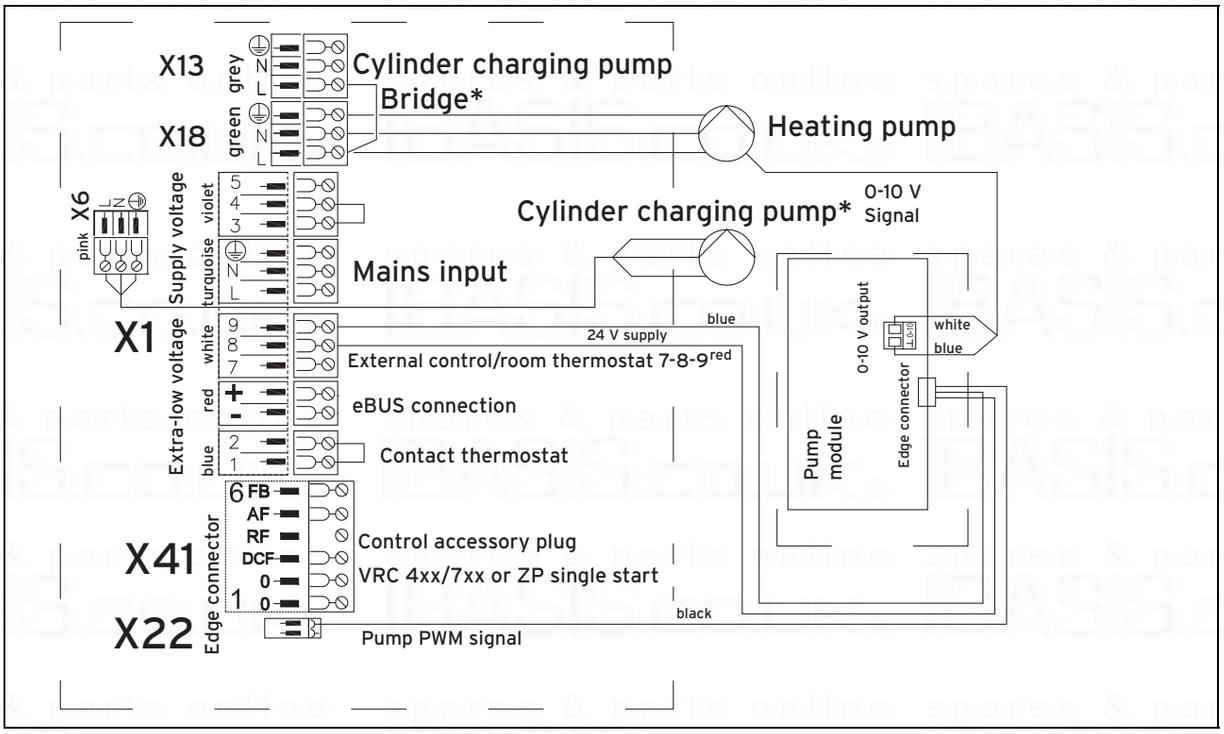

* If you connect the cylinder charging pump downstream of a low loss header or a heat exchanger, set this bridge and connect the cylinder charging pump to X6. Set the value from **D.26** to 3. Otherwise, connect the cylinder charging pump to and do not set the bridge.

I Commissioning Checklist

Benchmark Commissioning and Servicing Section

It is a requirement that the boiler is installed and commissioned to the manufacturers instructions and the data fields on the commissioning checklist completed in full.

To instigate the boiler guarantee the boiler needs to be registered with the manufacturer within one month of the installation.

To maintain the boiler guarantee it is essential that the boiler is serviced annually by a Gas Safe registered engineer who has been trained on the boiler installed. The service details should be recorded on the Benchmark Service Interval Record and left with the householder.

benchmark
COLLECTIVE MARK
THE MARK OF QUALITY FOR THE INSTALLATION, COMMISSIONING AND SERVICING OF DOMESTIC HEATING AND HOT WATER SYSTEMS

www.centralheating.co.uk

© Heating and Hotwater Industry Council (HHIC)

GAS BOILER SYSTEM COMMISSIONING CHECKLIST

This Commissioning Checklist is to be completed in full by the competent person who commissioned the boiler as a means of demonstrating compliance with the appropriate Building Regulations and then handed to the customer to keep for future reference.

Failure to install and commission according to the manufacturer's instructions and complete this Benchmark Commissioning Checklist will invalidate the warranty. This does not affect the customer's statutory rights.

Customer name:	Telephone number:
Address:	
Boiler make and model:	
Boiler serial number:	
Commissioned by (PRINT NAME):	Gas Safe register number:
Company name:	Telephone number:
Company address:	
	Commissioning date:
To be completed by the customer on receipt of a Building Regulations Compliance Certificate*	
Building Regulations Notification Number (if applicable):	

CONTROLS (tick the appropriate boxes)				
Time and temperature control to heating	Room thermostat and programmer/timer		Programmable room thermostat	
	Load/weather compensation		Optimum start control	
Time and temperature control to hot water	Cylinder thermostat and programmer/timer		Combination Boiler	
Heating zone valves	Fitted		Not required	
Hot water zone valves	Fitted		Not required	
Thermostatic radiator valves	Fitted		Not required	
Automatic bypass to system	Fitted		Not required	
Boiler interlock			Provided	

ALL SYSTEMS				
The system has been flushed and cleaned in accordance with BS7593 and boiler manufacturer's instructions			Yes	
What system cleaner was used?				
What inhibitor was used?		Quantity		litres
Has a primary water system filter been installed?	Yes		No	

CENTRAL HEATING MODE measure and record:			
Gas rate	m^3/hr	**OR**	ft^3/hr
Burner operating pressure (if applicable)	mbar	**OR** Gas inlet pressure	mbar
Central heating flow temperature			°C
Central heating return temperature			°C

COMBINATION BOILERS ONLY				
Is the installation in a hard water area (above 200ppm)?	Yes		No	
If yes, and if required by the manufacturer, has a water scale reducer been fitted?	Yes		No	
What type of scale reducer has been fitted?				

DOMESTIC HOT WATER MODE Measure and Record:			
Gas rate	m^3/hr	**OR**	ft^3/hr
Burner operating pressure (at maximum rate)	mbar	**OR** Gas inlet pressure at maximum rate	mbar
Cold water inlet temperature			°C
Hot water has been checked at all outlets	Yes	Temperature	°C
Water flow rate			l/min

CONDENSING BOILERS ONLY		
The condensate drain has been installed in accordance with the manufacturer's instructions and/or BS5546/BS6798	Yes	

ALL INSTALLATIONS							
Record the following:	At max. rate:	CO	ppm	**AND**	CO/CO_2	Ratio	
	At min. rate: (where possible)	CO	ppm	**AND**	CO/CO_2	Ratio	
The heating and hot water system complies with the appropriate Building Regulations						Yes	
The boiler and associated products have been installed and commissioned in accordance with the manufacturer's instructions						Yes	
The operation of the boiler and system controls have been demonstrated to and understood by the customer						Yes	
The manufacturer's literature, including Benchmark Checklist and Service Record, has been explained and left with the customer						Yes	

Commissioning Engineer's Signature
Customer's Signature
(To confirm satisfactory demonstration and receipt of manufacturer's literature)

*All installations in England and Wales must be notified to Local Authority Building Control (LABC) either directly or through a Competent Persons Scheme. A Building Regulations Compliance Certificate will then be issued to the customer.

benchmark COLLECTIVE MARK
THE MARK OF QUALITY FOR THE INSTALLATION, COMMISSIONING AND SERVICING OF DOMESTIC HEATING AND HOT WATER SYSTEMS

© Heating and Hotwater Industry Council (HHIC)

www.centralheating.co.uk

SERVICE RECORD

It is recommended that your heating system is serviced regularly and that the appropriate Service Interval Record is completed.

Service Provider

Before completing the appropriate Service Record below, please ensure you have carried out the service as described in the manufacturer's instructions. Always use the manufacturer's specified spare part when replacing controls.

SERVICE 01					Date:
Engineer name:					
Company name:					
Telephone No:					
Gas safe register No:					
Record:	At max. rate:	CO	ppm	**AND**	CO_2 %
	At min. rate: (Where Possible)	CO	ppm	**AND**	CO_2 %
Comments:					
Signature					

SERVICE 02					Date:
Engineer name:					
Company name:					
Telephone No:					
Gas safe register No:					
Record:	At max. rate:	CO	ppm	**AND**	CO_2 %
	At min. rate: (Where Possible)	CO	ppm	**AND**	CO_2 %
Comments:					
Signature					

SERVICE 03					Date:
Engineer name:					
Company name:					
Telephone No:					
Gas safe register No:					
Record:	At max. rate:	CO	ppm	**AND**	CO_2 %
	At min. rate: (Where Possible)	CO	ppm	**AND**	CO_2 %
Comments:					
Signature					

SERVICE 04					Date:
Engineer name:					
Company name:					
Telephone No:					
Gas safe register No:					
Record:	At max. rate:	CO	ppm	**AND**	CO_2 %
	At min. rate: (Where Possible)	CO	ppm	**AND**	CO_2 %
Comments:					
Signature					

SERVICE 05					Date:
Engineer name:					
Company name:					
Telephone No:					
Gas safe register No:					
Record:	At max. rate:	CO	ppm	**AND**	CO_2 %
	At min. rate: (Where Possible)	CO	ppm	**AND**	CO_2 %
Comments:					
Signature					

SERVICE 06					Date:
Engineer name:					
Company name:					
Telephone No:					
Gas safe register No:					
Record:	At max. rate:	CO	ppm	**AND**	CO_2 %
	At min. rate: (Where Possible)	CO	ppm	**AND**	CO_2 %
Comments:					
Signature					

SERVICE 07					Date:
Engineer name:					
Company name:					
Telephone No:					
Gas safe register No:					
Record:	At max. rate:	CO	ppm	**AND**	CO_2 %
	At min. rate: (Where Possible)	CO	ppm	**AND**	CO_2 %
Comments:					
Signature					

SERVICE 08					Date:
Engineer name:					
Company name:					
Telephone No:					
Gas safe register No:					
Record:	At max. rate:	CO	ppm	**AND**	CO_2 %
	At min. rate: (Where Possible)	CO	ppm	**AND**	CO_2 %
Comments:					
Signature					

SERVICE 09					Date:
Engineer name:					
Company name:					
Telephone No:					
Gas safe register No:					
Record:	At max. rate:	CO	ppm	**AND**	CO_2 %
	At min. rate: (Where Possible)	CO	ppm	**AND**	CO_2 %
Comments:					
Signature					

SERVICE 10					Date:
Engineer name:					
Company name:					
Telephone No:					
Gas safe register No:					
Record:	At max. rate:	CO	ppm	**AND**	CO_2 %
	At min. rate: (Where Possible)	CO	ppm	**AND**	CO_2 %
Comments:					
Signature					

*All installations in England and Wales must be notified to Local Authority Building Control (LABC) either directly or through a Competent Persons Scheme. A Building Regulations Compliance Certificate will then be issued to the customer.

benchmark COLLECTIVE MARK
THE MARK OF QUALITY FOR THE INSTALLATION, COMMISSIONING AND SERVICING OF DOMESTIC HEATING AND HOT WATER SYSTEMS

© Heating and Hotwater Industry Council (HHIC)

www.centralheating.co.uk

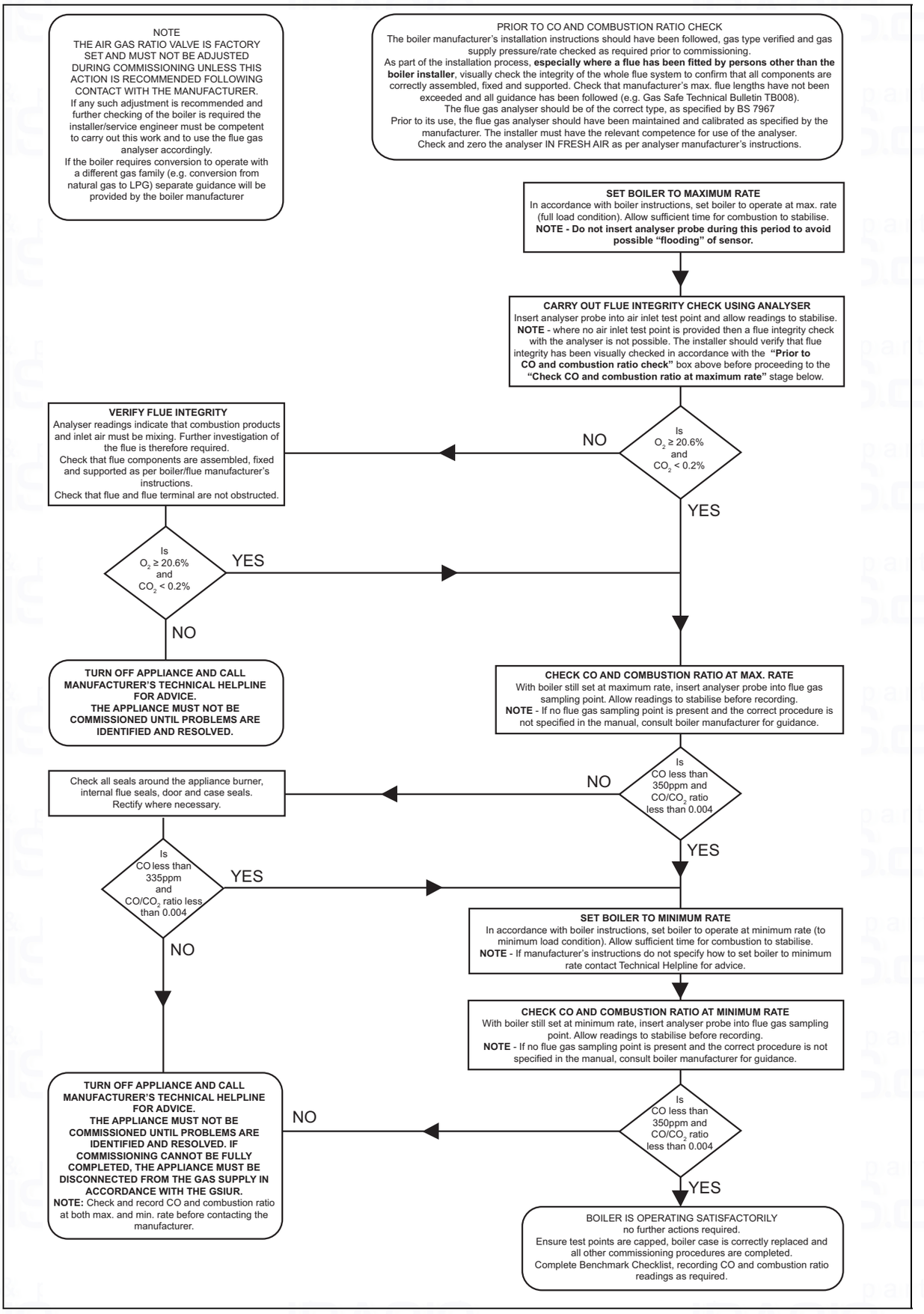
NOTE
THE AIR GAS RATIO VALVE IS FACTORY SET AND MUST NOT BE ADJUSTED DURING COMMISSIONING UNLESS THIS ACTION IS RECOMMENDED FOLLOWING CONTACT WITH THE MANUFACTURER.
If any such adjustment is recommended and further checking of the boiler is required the installer/service engineer must be competent to carry out this work and to use the flue gas analyser accordingly.
If the boiler requires conversion to operate with a different gas family (e.g. conversion from natural gas to LPG) separate guidance will be provided by the boiler manufacturer
PRIOR TO CO AND COMBUSTION RATIO CHECK
The boiler manufacturer's installation instructions should have been followed, gas type verified and gas supply pressure/rate checked as required prior to commissioning.
As part of the installation process, **especially where a flue has been fitted by persons other than the boiler installer**, visually check the integrity of the whole flue system to confirm that all components are correctly assembled, fixed and supported. Check that manufacturer's max. flue lengths have not been exceeded and all guidance has been followed (e.g. Gas Safe Technical Bulletin TB008).
The flue gas analyser should be of the correct type, as specified by BS 7967
Prior to its use, the flue gas analyser should have been maintained and calibrated as specified by the manufacturer. The installer must have the relevant competence for use of the analyser.
Check and zero the analyser IN FRESH AIR as per analyser manufacturer's instructions.
SET BOILER TO MAXIMUM RATE
In accordance with boiler instructions, set boiler to operate at max. rate (full load condition). Allow sufficient time for combustion to stabilise.
NOTE - Do not insert analyser probe during this period to avoid possible "flooding" of sensor.
CARRY OUT FLUE INTEGRITY CHECK USING ANALYSER
Insert analyser probe into air inlet test point and allow readings to stabilise.
NOTE - where no air inlet test point is provided then a flue integrity check with the analyser is not possible. The installer should verify that flue integrity has been visually checked in accordance with the **"Prior to CO and combustion ratio check"** box above before proceeding to the **"Check CO and combustion ratio at maximum rate"** stage below.
Is $O_2 \geq 20.6\%$ and $CO_2 < 0.2\%$
NO
YES
VERIFY FLUE INTEGRITY
Analyser readings indicate that combustion products and inlet air must be mixing. Further investigation of the flue is therefore required.
Check that flue components are assembled, fixed and supported as per boiler/flue manufacturer's instructions.
Check that flue and flue terminal are not obstructed.
Is $O_2 \geq 20.6\%$ and $CO_2 < 0.2\%$
YES
NO
TURN OFF APPLIANCE AND CALL MANUFACTURER'S TECHNICAL HELPLINE FOR ADVICE.
THE APPLIANCE MUST NOT BE COMMISSIONED UNTIL PROBLEMS ARE IDENTIFIED AND RESOLVED.
CHECK CO AND COMBUSTION RATIO AT MAX. RATE
With boiler still set at maximum rate, insert analyser probe into flue gas sampling point. Allow readings to stabilise before recording.
NOTE - If no flue gas sampling point is present and the correct procedure is not specified in the manual, consult boiler manufacturer for guidance.
Is CO less than 350ppm and CO/CO_2 ratio less than 0.004
NO
YES
Check all seals around the appliance burner, internal flue seals, door and case seals. Rectify where necessary.
Is CO less than 335ppm and CO/CO_2 ratio less than 0.004
YES
NO
SET BOILER TO MINIMUM RATE
In accordance with boiler instructions, set boiler to operate at minimum rate (to minimum load condition). Allow sufficient time for combustion to stabilise.
NOTE - If manufacturer's instructions do not specify how to set boiler to minimum rate contact Technical Helpline for advice.
CHECK CO AND COMBUSTION RATIO AT MINIMUM RATE
With boiler still set at minimum rate, insert analyser probe into flue gas sampling point. Allow readings to stabilise before recording.
NOTE - If no flue gas sampling point is present and the correct procedure is not specified in the manual, consult boiler manufacturer for guidance.
Is CO less than 350ppm and CO/CO_2 ratio less than 0.004
NO
YES
TURN OFF APPLIANCE AND CALL MANUFACTURER'S TECHNICAL HELPLINE FOR ADVICE.
THE APPLIANCE MUST NOT BE COMMISSIONED UNTIL PROBLEMS ARE IDENTIFIED AND RESOLVED. IF COMMISSIONING CANNOT BE FULLY COMPLETED, THE APPLIANCE MUST BE DISCONNECTED FROM THE GAS SUPPLY IN ACCORDANCE WITH THE GSIUR.
NOTE: Check and record CO and combustion ratio at both max. and min. rate before contacting the manufacturer.
BOILER IS OPERATING SATISFACTORILY
no further actions required.
Ensure test points are capped, boiler case is correctly replaced and all other commissioning procedures are completed.
Complete Benchmark Checklist, recording CO and combustion ratio readings as required.

J Technical data

Technical data – General

	VKK GB 806/3-E R1	VKK GB 1206/3-E R1	VKK GB 1606/3-E R1	VKK GB 2006/3-E R1	VKK GB 2406/3-E R1	VKK GB 2806/3-E R1
Designated country (designation in accordance with ISO 3166)	GB (Great Britain)	GB (Great Britain)	GB (Great Britain)	GB (Great Britain)	GB (Great Britain)	GB (Great Britain)
Approved unit categories	I_{2H}	I_{2H}	I_{2H}	I_{2H}	I_{2H}	I_{2H}
Type of gas	G20 (natural gas H)	G20 (natural gas H)	G20 (natural gas H)	G20 (natural gas H)	G20 (natural gas H)	G20 (natural gas H)
Gas connection, boiler side	R 1 1/2 inch	R 1 1/2 inch	R 1 1/2 inch	R 1 1/2 inch	R 1 1/2 inch	R 1 1/2 inch
Flow/return heating connections, boiler side	R 2 inch	R 2 inch	R 2 inch	R 2 inch	R 2 inch	R 2 inch
Flue gas pipe diameter	150 mm	150 mm	150 mm	200 mm	200 mm	200 mm
Supply air pipe diameter	130 mm	130 mm	130 mm	130 mm	130 mm	130 mm
Condensate drain pipework (min.)	21 mm	21 mm	21 mm	21 mm	21 mm	21 mm
Natural gas flow pressure (G20)	2 kPa (20 mbar)	2 kPa (20 mbar)	2 kPa (20 mbar)	2 kPa (20 mbar)	2 kPa (20 mbar)	2 kPa (20 mbar)
Gas flow rate at 15 °C and 1013 mbar, (G20)	8.5 m³/h	12.3 m³/h	16.9 m³/h	21.2 m³/h	25.4 m³/h	29.6 m³/h
Min. flue gas mass rate (G20)	6.3 g/s	10.0 g/s	12.2 g/s	19.9 g/s	21.7 g/s	23.5 g/s
Max. flue gas mass rate (G20)	35.4 g/s	51.2 g/s	70.7 g/s	88.4 g/s	106.1 g/s	123.8 g/s
Min. flue gas temperature (at tV/tR = 80/60 °C)	62 °C	62 °C	62 °C	62 °C	62 °C	62 °C
Max. flue gas temperature (at tV/tR = 80/60 °C)	60 … 70 °C (140.0 … 158.0 °F)	60 … 70 °C (140.0 … 158.0 °F)	60 … 70 °C (140.0 … 158.0 °F)	60 … 70 °C (140.0 … 158.0 °F)	60 … 70 °C (140.0 … 158.0 °F)	60 … 70 °C (140.0 … 158.0 °F)
Unit of type	B23; B23P; B53; C33; C43; C53; C63; C83; C93	B23; B23P; B53; C33; C43; C53; C63; C83; C93	B23; B23P; B53; C33; C43; C53; C63; C83; C93	B23; B23P; B53; C33; C43; C53; C63; C83; C93	B23; B23P; B53; C33; C43; C53; C63; C83; C93	B23; B23P; B53; C33; C43; C53; C63; C83; C93
Nominal rated efficiency (stationary) at 80/60 °C	97.8 %	97.8 %	97.8 %	98.4 %	98.4 %	98.4 %
Nominal rated efficiency (stationary) at 60/40 °C	100.5 %	100.5 %	100.5 %	100.5 %	100.5 %	100.5 %
Nominal rated efficiency (stationary) at 50/30 °C	103.0 %	103.0 %	103.0 %	103.0 %	103.0 %	103.0 %
Nominal efficiency (stationary) at 40/30 °C	105.1 %	105.1 %	105.1 %	105.1 %	105.1 %	105.1 %
30% efficiency	108.4 %	108.4 %	108.4 %	108.2 %	108.2 %	108.2 %
Standard degree of utilisation (when set to nominal heat output, DIN 4702, T8) at 75/60 °C	106.0 %	106.0 %	106.0 %	106.0 %	106.0 %	106.0 %
Standard degree of utilisation (when set to nominal heat output, DIN 4702, T8) at 40/30 °C	110.0 %	110.0 %	110.0 %	110.0 %	110.0 %	110.0 %
Remaining delivery pressure (does not apply for cascade systems)	100.0 Pa (0.001000 bar)	100.0 Pa (0.001000 bar)	150.0 Pa (0.001500 bar)	150.0 Pa (0.001500 bar)	150.0 Pa (0.001500 bar)	150.0 Pa (0.001500 bar)
NOx class	5	5	5	5	5	5
NOx emissions	<60 mg/kWh	<60 mg/kWh	<60 mg/kWh	<60 mg/kWh	<60 mg/kWh	<60 mg/kWh
CO emissions	<20 mg/kWh	<20 mg/kWh	<20 mg/kWh	<20 mg/kWh	<20 mg/kWh	<20 mg/kWh
Nominal CO_2 (G20/G25)	9.1 … 9.3 vol. %	9.1 … 9.3 vol. %	9.1 … 9.3 vol. %	9.1 … 9.3 vol. %	9.1 … 9.3 vol. %	9.1 … 9.3 vol. %

	VKK GB 806/3-E R1	VKK GB 1206/3-E R1	VKK GB 1606/3-E R1	VKK GB 2006/3-E R1	VKK GB 2406/3-E R1	VKK GB 2806/3-E R1
Boiler dimension, width	695 mm	695 mm	695 mm	695 mm	695 mm	695 mm
Boiler dimension, height	1,285 mm	1,285 mm	1,285 mm	1,285 mm	1,285 mm	1,285 mm
Boiler dimension, depth	1,240 mm	1,240 mm	1,240 mm	1,550 mm	1,550 mm	1,550 mm
Approx. net weight	200 kg	220 kg	235 kg	275 kg	295 kg	310 kg
Ready for operation weight approx.	210 kg	235 kg	255 kg	300 kg	320 kg	340 kg

Technical data – G20 power/loading G20

	VKK GB 806/3-E R1	VKK GB 1206/3-E R1	VKK GB 1606/3-E R1	VKK GB 2006/3-E R1	VKK GB 2406/3-E R1	VKK GB 2806/3-E R1
Nominal heat output range P at 80/60 °C	13.6 … 78.2 kW	21.3 … 113.4 kW	26.2 … 156.5 kW	43.1 … 196.8 kW	47.0 … 236.2 kW	51.0 … 275.5 kW
Nominal heat output range P at 60/40 °C	14.1 … 80.4 kW	22.1 … 116.5 kW	27.1 … 160.8 kW	44.2 … 201.0 kW	48.2 … 241.2 kW	52.3 … 281.4 kW
Nominal heat output range P at 50/30 °C	14.4 … 82.4 kW	22.7 … 119.4 kW	27.8 … 164.8 kW	45.3 … 206.0 kW	49.1 … 247.2 kW	53.6 … 288.4 kW
Nominal heat output range P at 40/30 °C	14.7 … 84.1 kW	23.1 … 121.8 kW	28.4 … 168.2 kW	46.2 … 210.2 kW	50.4 … 252.2 kW	54.7 … 294.3 kW
Maximum heat input, heating side	80.0 kW	115.9 kW	160.0 kW	200.0 kW	240.0 kW	280.0 kW
Minimum heat input	14.0 kW	22.0 kW	27.0 kW	44.0 kW	48.0 kW	52.0 kW

Technical data – Heating

	VKK GB 806/3-E R1	VKK GB 1206/3-E R1	VKK GB 1606/3-E R1	VKK GB 2006/3-E R1	VKK GB 2406/3-E R1	VKK GB 2806/3-E R1
Max. flow temperature adjustment range (default setting: 80 °C)	35 … 85 °C	35 … 85 °C	35 … 85 °C	35 … 85 °C	35 … 85 °C	35 … 85 °C
Permissible total over-pressure	0.6 MPa (6.0 bar)	0.6 MPa (6.0 bar)	0.6 MPa (6.0 bar)	0.6 MPa (6.0 bar)	0.6 MPa (6.0 bar)	0.6 MPa (6.0 bar)
Floor-standing boiler capacity (without connection piece)	5.74 l	8.07 l	10.4 l	12.73 l	15.05 l	17.37 l
Circulation water volume (with reference to ΔT= 20 K)	3.44 m³/h	4.99 m³/h	6.88 m³/h	8.60 m³/h	10.33 m³/h	12.05 m³/h
Pressure loss (with reference to ΔT= 20 K)	0.008 MPa (0.080 bar)	0.0085 MPa (0.0850 bar)	0.009 MPa (0.090 bar)	0.0095 MPa (0.0950 bar)	0.01 MPa (0.10 bar)	0.0105 MPa (0.1050 bar)
Condensate volume at heating mode 40/30 °C	13 l/h	20 l/h	27 l/h	34 l/h	40 l/h	47 l/h
Heating standby losses per day (heating 70 °C)	<0.4%	<0.4%	<0.4%	<0.4%	<0.4%	<0.4%

Technical data – Electrics

	VKK GB 806/3-E R1	VKK GB 1206/3-E R1	VKK GB 1606/3-E R1	VKK GB 2006/3-E R1	VKK GB 2406/3-E R1	VKK GB 2806/3-E R1
Rated voltage	230 V/50 Hz	230 V/50 Hz	230 V/50 Hz		230 V/50 Hz	230 V/50 Hz
Permissible connected voltage	190 … 253 V	190 … 253 V	190 … 253 V	190 … 253 V	190 … 253 V	190 … 253 V
Built-in fuse (slow-blow, H or D)	4 A	4 A	4 A	4 A	4 A	4 A
Max. electrical power consumption	260 W	260 W	320 W	320 W	320 W	320 W
Standby electrical power consumption	8 W	8 W	8 W	8 W	8 W	8 W
Level of protection	IP 20	IP 20	IP 20	IP 20	IP 20	IP 20
Unit protection class	Class I	Class I	Class I	Class I	Class I	Class I
Test symbol/registration no.	CE-0063BS3740	CE-0063BS3740	CE-0063BS3740	CE-0063BS3740	CE-0063BS3740	CE-0063BS3740

Index

A
Air/flue pipe 5
Aligning 10
Article number 7
B
Burner 24
Burner anti-cycling time 21
C
Calling up diagnostics codes 20
CE label 9
Check programmes 15
Checking the CO/CO_2 ratio 22
Combustion air 5
Combustion air pressure monitor 26
Competent person 4
Condensate collector 25
Condensate drain pipework 12
Condensate siphon 17, 26
Connection dimensions 9
Corrosion 5
Cylinder charging partial load 21
D
Decommissioning 28
Disposal, packaging 29
Disposing of the packaging 29
Documents 7
Domestic hot water cylinder 12
E
Electricity 5
F
Fault codes 28, 38
Filling 17
Filling pressure 16
Flow temperature, maximum 21
Flue gas pressure monitor 26
Flue gas route 5
Front casing 10
Front flap 10
Frost 5
Function check 15
Function menu 15, 36
G
Gas connection 11
Gas ratio setting 18
H
Handing the product over to the operator 21
Heating flow 12
Heating installation 17
Heating partial load 21
Heating return 12
I
Identification plate 7
If you smell gas 4
Ignition electrode 25
Inspection intervals 22
Inspection work 22, 27, 34
Installation clearances 10
Installation site 5
Installer level 15
Intended use 4
M
Mains connection 14
Maintenance intervals 22
Maintenance work 22, 27, 34
Minimum clearances 10
Monitoring electrode 25
O
Operating concept 15
P
Power supply 14
Product dimensions 9
Pump operating mode 21
Pump overrun 21
Purging 17
Q
Qualification 4
R
Regulations 6
Resetting parameters 28
Resetting, all parameters 28
S
Safety device 5
Schematic drawing 5
Scope of delivery 9
Serial number 7
Service code 15
Service partner 28
Setting the CO/CO_2 ratio 23
Spare parts 22
Status codes 15, 37
Supply of combustion air 5
T
Tool 5
Treating the heating water 16
V
Voltage 5

spares & parts online
IBASIS.CO.UK®

spares & parts online
IBASIS.CO.UK®

spares & parts online
IBASIS.CO.UK®

0020149561_01 ▮ 01.09.2016

supplier
Vaillant Ltd.
Nottingham Road ▮ Belper ▮ Derbyshire ▮ DE56 1JT
Telephone 0330 100 3461
info@vaillant.co.uk ▮ www.vaillant.co.uk

© These instructions, or parts thereof, are protected by copyright and may be reproduced or distributed only with the manufacturer's written consent.
We reserve the right to make technical changes.