For the competent person

Instructions for commissioning, maintenance and troubleshooting

Solar heating system with auroSTOR

Solar hot water system

GB, IE

spares & parts online IBASIS.co.uk

Vaillant

Table of contents

1 Notes on the documentation ... 3
1.1 Other applicable documents ... 3
1.2 Storing documents ... 3
1.3 Symbols used ... 3
1.4 Applicability of the instructions ... 3
1.5 Cylinder identification plate ... 4
1.6 CE label ... 4
1.7 Benchmark ... 4

2 Safety instructions and regulations ... 4
2.1 Safety and warning information ... 4
2.1.1 Classification of action-related warnings ... 4
2.1.2 Structure of warnings ... 4
2.2 Intended use ... 5
2.3 General safety instructions ... 5
2.4 Overview of EU standards ... 6
2.4.1 General information on solar heating system ... 6
2.4.2 Cylinder and cylinder assembly ... 7
2.5 Regulations for Great Britain ... 7
2.5.1 Technical Guidance ... 7
2.5.2 Related documents ... 7
2.5.3 Regulations for the prevention of accidents ... 8

3 System description ... 8
3.1 Design and function of solar heating system ... 8
3.2 Electrical wiring ... 10
3.3 Hot water temperature regulation ... 10
3.4 Heating control ... 10

4 Description of the components ... 11
4.1 auroSTOR solar cylinder ... 11
4.1.1 Safety devices ... 12
4.1.2 Cylinder operating elements ... 12
4.2 Solar fluid ... 14
4.2.1 Properties of solar fluid ... 14
4.2.2 Solar circuit frost and corrosion protection system ... 14
4.2.3 Cylinder frost protection ... 14
4.2.4 Safety data sheet for Vaillant solar fluid ... 15
4.3 System configuration ... 17
4.3.1 Vaillant controllers and their basic functions ... 17
4.3.2 Control functions ... 18
4.3.3 Technical data of the auroSTOR solar cylinder 20
4.3.4 Dimensions ... 22

5 Assembly ... 23
5.1 Scope of delivery ... 23
5.2 Transporting the cylinder ... 23
5.3 Requirements for installation site ... 23

6 Installation ... 24
6.1 Installation sequence ... 24
6.2 Installation of solar circuit piping ... 24
6.2.1 Piping material in the solar circuit ... 24
6.2.2 Layout of piping in the solar circuit ... 24
6.2.3 Realisation of solar circuit piping ... 25
6.2.4 Venting the solar circuit ... 27
6.3 Pipes for the primary heating circuit ... 29
6.4 Installing hot water pipes ... 29
6.5 Hot water thermostat mixer ... 29
6.5.1 Installing the hot water thermostat mixer (without secondary circulation line) ... 30
6.5.2 Installing the hot water thermostat mixer (with secondary circulation line) ... 30
6.5.3 Setting the hot water thermostat mixer ... 30
6.6 Installation of cold mains inlet ... 31
6.6.1 Pressure in cold mains inlet ... 31
6.6.2 Mounting the safety assembly ... 31
6.6.3 Mounting the expansion vessel ... 32
6.6.4 Mounting the drain valve ... 32
6.6.5 Laying the pipes to the tundish ... 32
6.7 Installation of discharge pipe ... 32
6.7.1 Design of discharge pipe ... 32
6.7.2 High drain ... 34
6.8 Electrical installation ... 34
6.8.1 Options for combining control components ... 34
6.8.2 Electrical connection of control components ... 36
6.8.3 Connecting up the electric immersion heater ... 37
6.8.4 Connection of the solar pump ... 38
6.8.5 Connecting up the solar yield temperature sensor ... 38
6.8.6 Installing the control components in accordance with the connection wiring diagrams ... 40

7 Commissioning ... 52
7.1 Checking leak-tightness ... 52
7.2 Flushing the solar circuit with solar fluid ... 53
7.3 Filling the solar circuit with solar fluid ... 53
7.4 Setting the flow rate in the solar circuit ... 54
7.5 Flushing the primary heating circuit ... 55
7.6 Water treatment ... 55
7.7 Filling the cylinder ... 56
7.8 Filling the central heating system ... 57
7.9 Commissioning the gas-fired wall-hung boiler 58
7.10 Setting the hot water thermostat mixer ... 58
7.11 Filling in the commissioning report ... 58
7.12 Handover to the operator ... 58

8 Inspection and maintenance 59
8.1 Checking the temperature/pressure relief valve and expansion relief valve 61
8.2 Checking the charge pressure of the expansion vessel 61
8.3 Draining the cylinder 61

9 Fault finding 62

10 Taking the cylinder out of service 65
10.1 Temporarily taking the cylinder out of service 65
10.2 Permanently taking the cylinder out of service 65

11 Recycling and disposal 65
11.1 Cylinder disposal 65
11.2 Disposal of packaging 65

12 Customer service and manufacturer's guarantee 66
12.1 Vaillant service 66
12.2 Vaillant guarantee 66

1 Notes on the documentation

The following instructions are intended to guide you through the entire documentation.
Other documents apply in addition to these installation instructions.
We do not accept liability for any claims or damages resulting from failure to observe these instructions.

1.1 Other applicable documents

➤ When installing and maintaining the solar heating system, you must observe all of the installation and maintenance instructions for system components as well as those for other accessories which are used in the system.

These installation and maintenance instructions are provided with the relevant system components and accessories.

1.2 Storing documents

➤ Pass these installation instructions and all other applicable documents and, if necessary, any required tools to the system operator.

The system operator will store these so that they are available when required.

1.3 Symbols used

The symbols used in the text are explained below.

Symbol that denotes useful tips and information

➤ Symbol for a required action

1.4 Applicability of the instructions

These instructions apply for the following only:

Unit type	Cylinder volume	Article number
VIH S GB 210/2 S	210 litres	0020115422
VIH S GB 260/2 S	260 litres	0020115425
VIH S GB 310/2 S	310 litres	0020115428

Table 1.1 Applicability of the instructions

➤ The article number of the unit is displayed on the identification plate.

1.5 Cylinder identification plate

The identification plate is attached to the cylinder at the factory.

1.6 CE label

CE labelling shows that, based on the type overview, the units comply with the basic requirements of the applicable directives.
The CE declarations of conformity can be viewed at the manufacturer's premises and can be supplied if necessary.

1.7 Benchmark

Vaillant Ltd. supports the Benchmark Initiative. You will find the Benchmark Logbook on the last page of this instruction manual. It is very important that this document be filled out properly when installing, commissioning and handing-over to the operator of the installation. Installers should point out also the service record section for completion following service calls to this appliance.
Benchmark places responsibilities on both manufacturers and installers. The purpose is to ensure that customers are provided with the correct equipment for their needs, that it is installed, commissioned and serviced in accordance with the manufacturer's instructions by competent persons approved at the time by the Health and Safety Executive and that it meets the requirements of the appropriate Building Regulations.
The Benchmark Checklist can be used to demonstrate compliance with Building Regulations and should be provided to the customer for future reference.
Installers are required to carry out installation, commissioning and servicing work in accordance with the Benchmark Code of Practice which is available from the Heating and Hot water Industry Council who manage and promote the Scheme.
Visit "www.central heating.co.uk" for more information.

benchmark
COLLECTIVE MARK
THE MARK OF QUALITY FOR THE INSTALLATION, COMMISSIONING AND SERVICING OF DOMESTIC HEATING AND HOT WATER SYSTEMS

2 Safety instructions and regulations

2.1 Safety and warning information

When conducting installation and maintenance work, observe the general safety instructions and the warning notes which appear before each of the actions.

2.1.1 Classification of action-related warnings

The action-related warnings are classified in accordance with the severity of the possible danger using the following warning signs and signal words:

Warning sign	Signal word	Explanation
	Danger!	Imminent danger to life or risk of severe personal injury
	Danger!	Risk of death from electric shock
	Warning!	Risk of minor personal injury
	Caution!	Risk of material or environmental damage

2.1.2 Structure of warnings

Warning signs are identified by an upper and lower separating line and are laid out according to the following basic principle:

Signal word!
Type and source of danger!
Explanation of the type and source of danger.
➤ Measures for averting the danger

2.2 Intended use

The Vaillant solar heating system has been constructed using state-of-the-art technology in accordance with recognised safety regulations.
Nevertheless, there is still a risk of injury or danger of death to the operator or others or of damage to the unit and other property in the event of improper use or use for which the unit is not intended.
These components of the Vaillant solar heating system are not intended to be used by persons (including children) with limited physical, sensory or mental capabilities or insufficient experience and/or knowledge, unless they are supervised by a person who is responsible for their safety or have been instructed by this person on how to use the unit.
Children must be supervised to ensure that they do not play with the unit.

The purpose of the Vaillant solar heating system is to provide a solar-supported hot water supply.
Vaillant auroSTOR VIH S GB 210/2 S, VIH S GB 260/2 S, and VIH S GB 310/2 S solar cylinders are unvented, indirectly heated domestic hot water cylinders for solar heating systems designed for use with gas-fired wall-hung boilers as per GB standards for hot water supply systems. The cylinders work with the pressure of the water supply line and do not need a cold water tank for their supply.
They are used only to supply potable water heated up to 80 °C by means of a solar collector array. They may only be used for this purpose. The cylinders can be used in combination with a downstream gas-fired wall-hung boiler for hot water production in accordance with GB standards.
Any other use that is not specified in these instructions, or use beyond that specified in this document shall be considered improper use.
Any direct commercial or industrial use is also deemed to be improper.
The manufacturer/supplier is not liable for any claims or damage resulting from improper use. The user alone bears the risk.
Intended use includes the following:
- observance of accompanying operating, installation and servicing instructions for Vaillant products as well as for other parts and components of the system.
- compliance with all inspection and maintenance conditions listed in the instructions.

Improper use of any kind is prohibited!

At the end of these instructions there is a commissioning report which you must fill in and hand over to the operator.

All installers should have a current ID card and registration number. The cylinder must be installed by a competent person approved at the time by the Health and Safety Executive to the prevailing standards, installation book and building regulations at the time of installation.

2.3 General safety instructions

Installation, commissioning, and maintenance
Installation and adjustment as well as service, maintenance and repair must be carried out by a competent person approved at the time by the Health and Safety Executive and be in accordance with the relevant requirements of the Local Authority, Building Regulations, Building Regulations (Scotland), Building Regulations (Northern Ireland), and the bye-laws of the local Water Undertaking.

All electrical wiring must be carried out by a competent electrician and be in accordance with the current I.E.E. Wiring Regulations.
- ➤ Make sure that the system has been planned in accordance with technical regulations and all applicable planning standards.

Risk of death due to lack of safety devices
A lack of safety devices (e.g. expansion relief valve, expansion vessel) can lead to potentially fatal scalding and other injuries, e.g. due to explosions.
The schematic drawings included in this document do not show all safety devices required for correct installation.
- ➤ Install the necessary safety devices in the system.
- ➤ Inform the operator about the function and position of the safety devices.
- ➤ Observe the applicable national and international laws, standards and guidelines.

Safety information on the solar heating system
- ➤ Mount and operate the entire solar heating system in accordance with the recognised technical regulations.
- ➤ Make sure that all valid health and safety regulations are observed, especially for work on the roof. Always use fall protection devices if there is a risk of falling. We recommend the use of a Vaillant safety belt. Observe the accident prevention regulations of the professional associations.
- ➤ Earth the solar circuit for potential equalisation and to protect against overvoltage. Attach earthing pipe clamps to the solar circuit pipes and connect the clamps to a potential equalisation bar using 16 mm^2 Cu cable.

Cylinder safety information
Following an inspection, it was ascertained that this product complies with the building regulations for closed hot water cylinder systems and must not be changed or rebuilt in any way.
- When replacing parts, only original replacement parts from Vaillant Ltd. may be used.

The installation must be approved in accordance with the building regulations.
- Installation plans must be disclosed to the relevant authorities.

Important:
As stipulated in the manual "Handling Operations Regulations 1992", the weight of the unit exceeds that which should be lifted by one person alone.

Electric potential equalisation
If you use an electric immersion heater in the cylinder, the external voltage may build up electrical potential in the water which can result in the electrochemical corrosion of the electric immersion heater.
If the solar cylinder is connected with pipes made of non-metallic materials and is not earthed, corrosion damage can occur.
- Make sure that both the hot water and cold mains inlets are connected to the earth line by means of an earth cable directly on the cylinder.
- You must also make sure that the electric immersion heater is connected to the earth line via the earthing terminal.

Risk of scalding and damage from escaping hot or cold water.
- If you use plastic pipes for the hot or cold water connection of the unit, you must only use pipes which are temperature-resistant up to 95 °C under a pressure of 1.0 MPa (10 bar).

Improper use and/or the use of unsuitable tools may result in damage (e.g. water leaks).
- Always use a suitable open-end wrench (spanner) to tighten or undo threaded connections. Do not use pipe wrenches, extensions, etc.

If the water does not satisfy the standards for water quality in the UK with a maximum chloride content of 250 mg/l, this may result in corrosion damage to the cylinder.
- Only use the cylinder to heat potable water.

Avoiding burns and scalds
- Install and replace collectors or collector parts on very cloudy days. Only carry out installation work in the early morning or in the evening on sunny days or cover the collector.
- Fill and flush the solar heating system when the collectors are cold. Cover the collectors while doing so.

If the solar heating system is in stagnation, hot steam can escape from the expansion relief valve of the solar pump unit, causing injury to persons. Escaping solar fluid is visible in the collection canister.
- Connect the expansion relief valve to a collecting container via a metal pipe.
- Position an air vent or an air separator system in such a way that persons are not endangered by escaping steam.
- Install a hot water thermostat mixer in the system to protect against scalding.

Preventing frost damage
You should not turn the gas-fired wall-hung boiler off completely so that you can still use all of the safety functions for your heating system. If you want to take the unit out of operation for a relatively long period of time in an unheated room at risk from frost, you must completely drain the auroSTOR.

Avoiding damage caused by leaks
If there are leaks in the pipework, close off the cold water stop valve on the safety assembly and notify a competent person so that they can rectify the leaks.

Preventing damage due to unauthorised changes to the unit
Changes to the supply lines, relief valve termination, and expansion relief valve may only be carried out by a competent person!

2.4 Overview of EU standards

2.4.1 General information on solar heating system

EN ISO 9488
Solar heating system and components, terminology (ISO/DIS 9488; 1995)

EN 12975-1
Solar heating systems and components; Collectors, Part 1: General requirements

EN 12975-2
Solar heating systems and components; Collectors; Part 2: Testing methods

EN 1991-2-3
Eurocode 1 – Basis of design and actions on structures, Part 2–3: Actions on structures - Snow loads

EN 12976-1
Solar heating systems and components; Factory made systems - Part 1: General requirements

EN 12976-2
Solar heating systems and components; Factory made systems - Part 2: Testing methods

ENV 12977-1
Solar heating systems and components;
Custom built systems,
Part 1: General requirements

ENV 12977-2
Solar heating systems and components;
Factory made systems,
Part 2: Testing methods

ISO 9459-1: 1993
Solar heating – Domestic water heating systems – Part 1: System rating procedures using indoor test methods

ISO/TR 10217
Solar energy; Water heating system; Guideline for material selection with reference to internal corrosion

2.4.2 Cylinder and cylinder assembly

Pressure equipment directive 97/23/EC
Directive of the European Parliament and Council of 29th May 1997 for the approximation of the laws on pressure equipment of the Member States

EN 12977-3
Solar heating systems and components;
Custom built systems,
Part 3: Performance characterisation of domestic hot water cylinders

EN 12897:2006
Water supply - specification for indirectly heated unvented (closed) domestic hot water cylinders

EN 806-1
Specifications for installations inside buildings conveying water for human consumption - Part 1: General

EN 1717
Protection against pollution of potable water installations and general requirements of devices to prevent pollution by backflow

EN 60335-2-21
Safety of household and similar electrical appliances;
Part 2: Particular requirements for storage water heaters (domestic hot water cylinders and hot water boilers) (IEC 335-2-21: 1989 and supplements 1; 1990 and 2; 1990, modified)
Lightning protection

ENV 61024-1
Protection of structures against lightning – Part 1: General principles (IEC 1024-1: 1990; modified)
BS 6651: Code of practice for protection of structures against lightning

2.5 Regulations for Great Britain

2.5.1 Technical Guidance

The system must be installed in accordance with all relevant and applicable national regulations, and must be installed to suit site conditions.
Observe all national regulations, including:
- Working at Heights Regulations 2005
- Health and Safety at Work Act 1974
- Electricity at Work Regulations 1989
- IEE Wiring Regulations BS 7671
- Lightning protection requirements
- Equipotential bonding of electrical installations.

2.5.2 Related documents

The installation of the solar system must be in accordance with the relevant requirements of Health and Safety Document No. 635 (The Electricity at Work Regulations 1989), BS7671 (IEE Wiring Regulations) and the Water Supply (Water Fitting) Regulations 1999, or The Water Bylaws 2000 (Scotland). It should also be in accordance with the relevant requirements of the Local Authority, Building Regulations, The Building Regulations (Scotland), The Building Regulations (Northern Ireland) and the relevant recommendations of the following British Standards:

BS EN 806: Specification for installations inside buildings conveying water for human consumption

BS 6700: Services supplying water for domestic use within buildings and their curtilages.

BS. 5449 Forced circulation hot water central heating systems for domestic premises. Note: only up to 45 kW.

BS. 6880 Low temperature hot water heating systems of output greater than 45 kW.
Part 1 Fundamental and design considerations.
Part 2 Selection of equipment.
Part 3 Installation, commissioning and maintenance.

BS 6114: Expansion vessels using an internal diaphragm for unvented hot water supply systems

BS. 4814 Specification for: Expansion vessels using an internal diaphragm, for sealed hot water heating systems.

Unvented hot water systems must comply with building regulation G section 3.

2.5.3 Regulations for the prevention of accidents

When carrying out works such as solar installation work it is necessary to do so in a safe and workman like manner, taking due care of any aspects of the works that could result in injuries to person in or about the building as well as workers, passers by and the general public at large. To that end these works must conform, but not be limited to, the current regulations in force such as the following
Health and Safety at Work act 1974
Work at Height Regulations 2005.
Electricity at Work Regulations 1989
All necessary Building Regulations.

Work should be preceded by a risk assessment covering all aspects of health and safety risks, or training requirements that can reasonably be foreseen to be associated with the work. All scaffolding in the UK, other than prefabricated (zip-up) scaffold towers, must be designed and constructed by a vetted contractor, and have suitable kick boards, hand rails and where appropriate netting. Areas around the scaffolding should be zoned off and marked with suitable warning signs to a suitable distance to protect persons from falling objects. Workers should have available and use personal protective equipment as necessary. This would include equipment such as fall protection systems, safety gloves, goggles, dust masks as well as any specialised equipment that may be in use such as lifting and handling equipment.
The completed works shall comply with all necessary BS EN Standards and Codes of practice as well as Building control or planning requirements and be confirmed where necessary by notification to building control or the appropriate competence based notification body.

3 System description

3.1 Design and function of solar heating system

The solar heating system consists of four main components:
- The collectors, which absorb the solar radiation and make it useful
- The solar controller, which monitors, displays, and controls all system functions
- The solar pump unit, which is responsible for transporting the solar heat
- The solar cylinder

The Vaillant solar heating system is a closed hydraulic system in which heat is transferred to the cylinder via the heat exchanger with the help of the system's special heat transfer fluid.
On days when the solar radiation is not sufficient to heat the hot water in the cylinder, the cylinder water must be reheated using a heating system. This can take place using a gas-fired wall-hung boiler or an electric immersion heater.

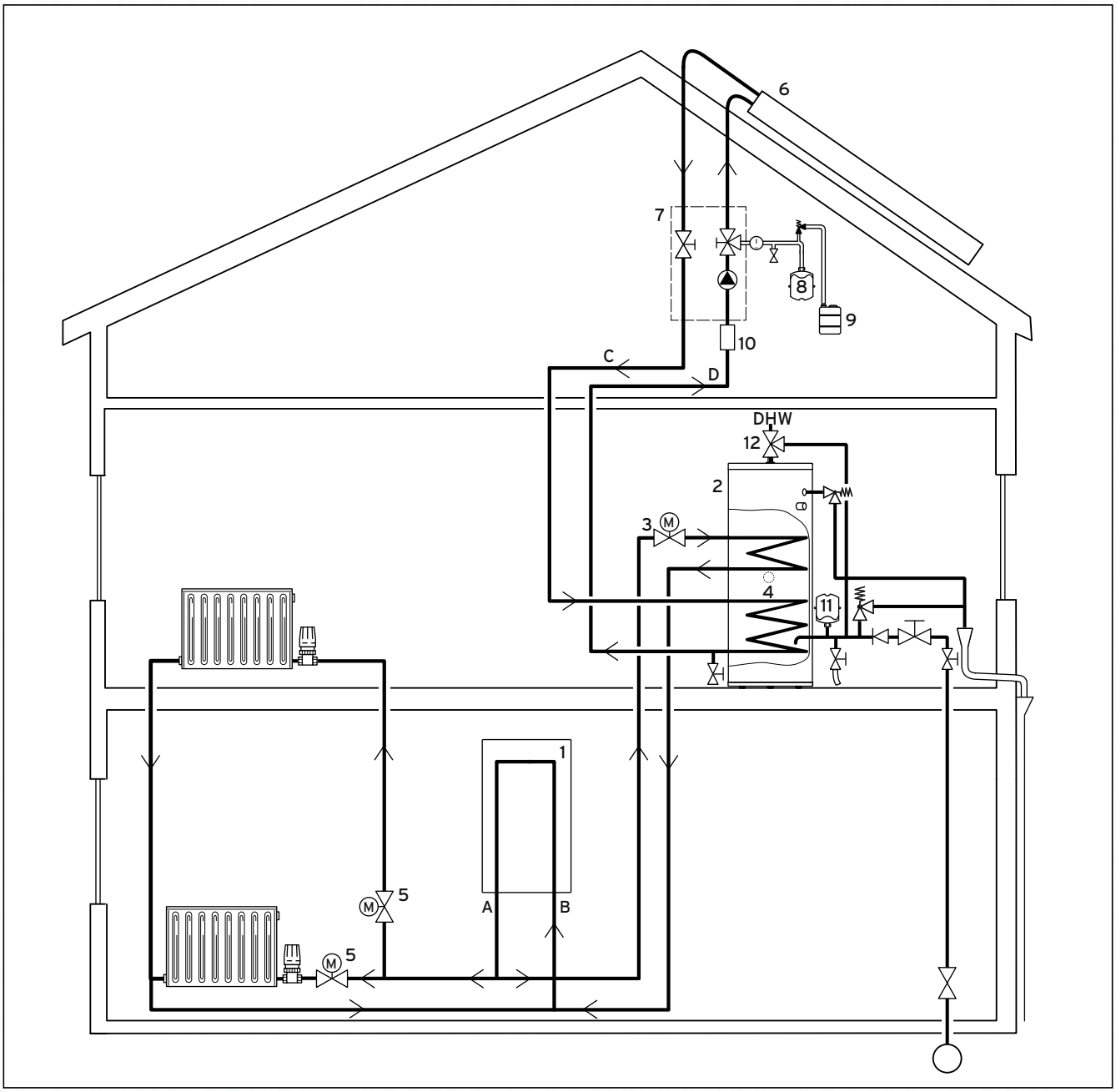

Fig. 3.1 System for solar hot water production

Key

1 Gas-fired wall-hung boiler
2 Cylinder
3 Two port motorised valve (230 V, supplied with cylinder)
4 Electric immersion heater
5 Two port motorised valve (230 V)
6 Collector (tube collector with top connections (example) or flat collector with top and bottom connections)
7 Solar pump unit
8 Solar protection and expansion vessel (Combined unit)
9 Collection canister for solar fluid
10 Automatic air separator system
11 Hot water expansion vessel
12 Thermostat mixer
A Primary heater flow
B Primary heater return
C Solar flow
D Solar return
DHW Hot water

The collection canister for solar fluid collects escaping solar fluid. The solar fluid must not reach the drainage system.

For the supply and return lines in the solar circuit, use insulated stainless steel pipes, e.g. the Vaillant Solar flexible pipe that is included in the scope of delivery of a Vaillant Solar set. Alternatively, you can also use copper pipes with press fittings and suitable insulation. Soft solder connections are not suitable for solar piping.

If a cylinder is fitted very high up in the building, negative pressure may form in the cylinder. Under such circumstances, the competent person must decide whether an anti-vacuum valve is required in order to prevent damage to the cylinder. If, as a result of draining or thermal contraction of the drinking water, the negative pressure in the cylinder is too high, an anti-vacuum valve ensures pressure compensation as a result of air flowing into the cylinder.

The collector (**6**) converts solar energy into heat and transfers the heat energy to a frost-protected solar fluid. Using the pipe system, the solar pump of the solar pump unit (**7**) conveys the heat from the collector to the bivalent cylinder (**2**). The solar pump unit is controlled by the solar controller.

The solar controller switches the solar pump on and off as soon as the temperature difference between the collector and cylinder exceeds or falls below the preset value. If the solar energy is not sufficient for requirements, the controller activates the gas-fired wall-hung boiler (**1**) to reheat the top third of the cylinder to the set hot water temperature value. The water in the cylinder can also be reheated using the electric immersion heater installed at the factory.

A solar expansion vessel compensates for pressure fluctuations in the solar circuit.
A solar protection vessel protects the expansion vessel from excessive temperatures in the solar circuit. We recommend installing a protection vessel.
All Vaillant solar sets contain a combined solar protection and solar expansion vessel (**8**).

3.2 Electrical wiring

If you use an eBUS-compatible Vaillant gas-fired wall-hung boiler, you can use a Vaillant Control Centre for the wiring.
If you are using a non-eBUS-compatible Vaillant gas-fired wall-hung boiler or a third-party boiler, you can use a standard cabling box.
Section 6.8 of these instructions describes the electrical wiring of the system in detail.

3.3 Hot water temperature regulation

You can control the hot water temperature in the top third of the cylinder using an auroMATIC VRS 560/2 or a calorMATIC VRC 470 with VR 68/2 and VR 61/2 or with a separate hot water controller.

Danger!
Risk of burns and scalds!
Water at a temperature of more than 60 °C could be delivered to the hot water draw-off points.
- ➤ Install a hot water thermostat mixer in the hot water pipe to provide effective scald protection.
- ➤ Set the hot water thermostat mixer to less than 60 °C and check the temperature at
  a hot water draw-off point.

3.4 Heating control

If you are using an eBUS-compatible Vaillant gas-fired wall-hung boiler, you can control the heating using a programmable Vaillant VRT room thermostat or a VRC weather compensator.
If you are using a non-eBUS-compatible Vaillant gas-fired wall-hung boiler or a third-party boiler, you can use a Vaillant VRT 30 room thermostat or one of the room thermostats commonly available on the market.

4 Description of the components

4.1 auroSTOR solar cylinder

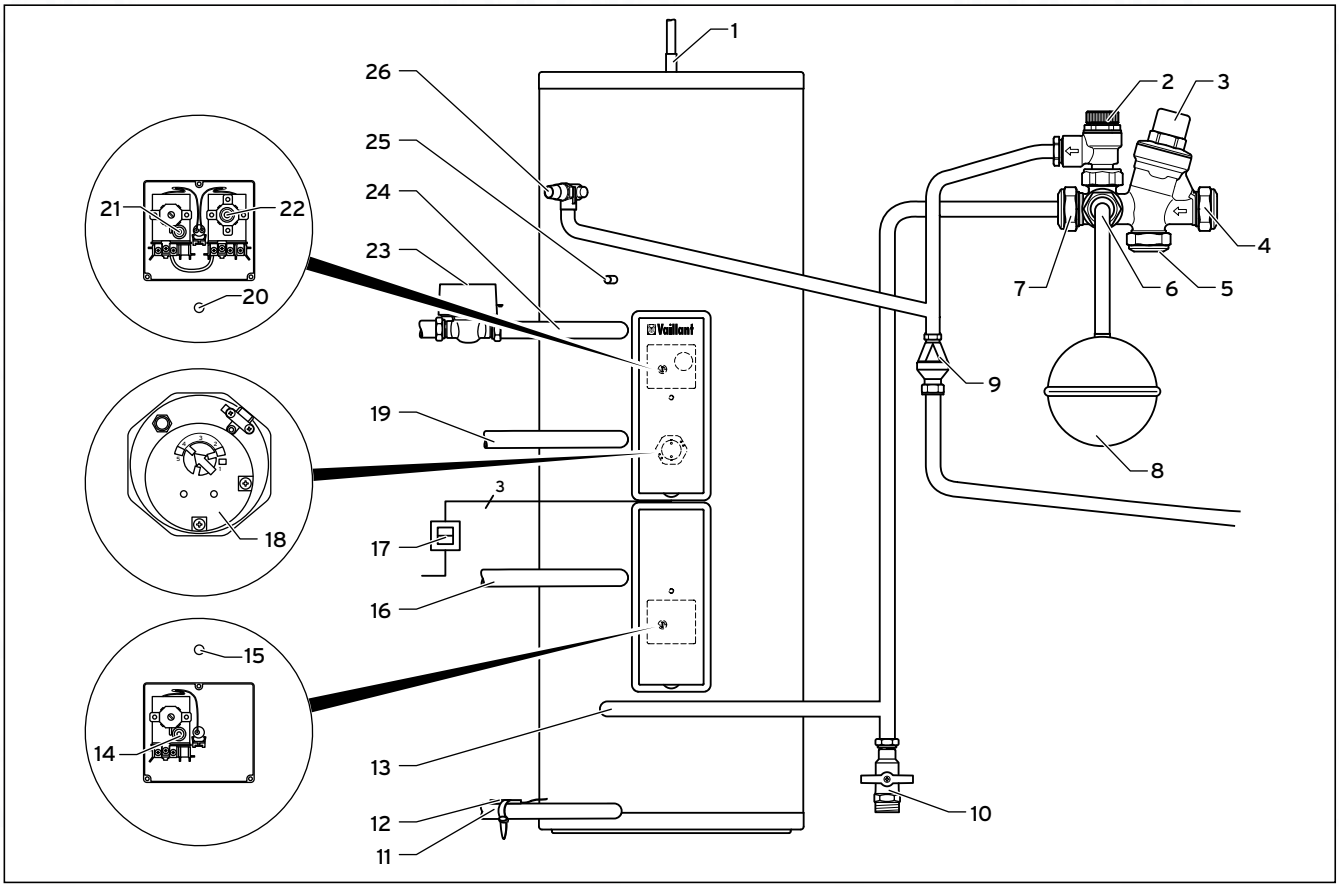

Fig. 4.1 auroSTOR solar cylinder function elements

Key

1 Hot water draw off
2 Expansion relief valve (6.0 bar)
3 Pressure reducing valve (3.5 bar) with line strainer
4 Cold water inlet
5 Pressure-controlled cold water inlet
6 Connection for hot water expansion vessel
7 Cylinder connection
8 Hot water expansion vessel
9 Tundish
10 Cylinder drain valve
11 Solar return
12 Solar yield temperature sensor (Ertrag)
13 Cold water inlet
14 Solar circuit thermal cut-out (TCO), set to 80ºC, to be connected with the solar pump in order to isolate this heat source if there is a fault in the solar control.
15 Solar circuit cylinder dry pocket (SP 2)
16 Solar flow
17 2-pole isolating switch for electric immersion heater
18 Electric immersion heater with thermostat and thermal cut-out
19 Return (gas-fired wall-hung boiler)
20 Primary heating circuit cylinder dry pocket (SP 1)
21 Primary heating circuit thermal cut-out, set to 80ºC, to be connected to the two port motorised valve in order to isolate the primary heat source if a fault occurs.
22 Cylinder thermostat (20 °C to 65 °C)
23 Two port motorised valve
24 Flow line (gas-fired wall-hung boiler)
25 Secondary return
26 Temperature and pressure relief valve (90 °C, 7 bar)

The auroSTOR solar cylinder is available in three sizes: 210, 260, and 310 litres. The cylinder is made from stainless steel and is insulated with EPS with heat radiation absorbers. The cylinder is supplied along with all required cold and hot water control devices and a two port motorised valve.
The cylinder works with the pressure of the water supply line and does not need a cold water tank for its supply. The cylinder has hot and cold water inlets with a diameter of 22 mm. To enable the cylinder to work as well as possible, a cold water supply with a dynamic pressure and flow rate that are appropriate for the system is required (→ **section 6.6.1**).

4.1.1 Safety devices

The cylinder is delivered with all safety and control devices for the operation of the unvented domestic hot water supply system:
- Temperature and pressure relief valve (90 °C, 7 bar)
- Pressure reducing valve (3.5 bar) with line strainer
- Expansion relief valve (one-way valve, 6.0 bar)
- Solar circuit thermal cut-out, set to 80 °C, to be connected with the solar pump in order to isolate this heat source if there is a fault in the solar control.
- Thermal cut-out for electric immersion heater
- Primary heating circuit thermal cut-out, set to 80 °C, to be connected to the two port motorised valve in order to isolate the primary heat source if a cylinder thermostat fault occurs.

The thermal cut-out and other safety devices must always be used.

4.1.2 Cylinder operating elements

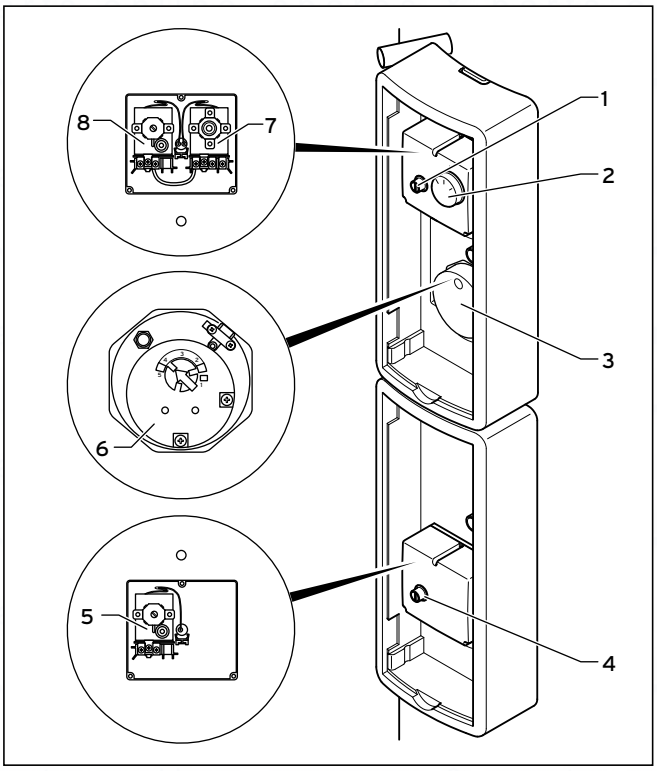

Fig. 4.2 Cylinder operating elements

Key
1 Cover cap for reset button for primary heating circuit TCO
2 Primary heating circuit temperature controller
3 Electric immersion heater cover
4 Cover cap for reset button for solar circuit TCO
5 Solar circuit thermal cut-out (TCO)
6 Electric immersion heater
7 Cylinder thermostat
8 Primary heating circuit thermal cut-out

The following are pre-mounted at the factory for the auroSTOR solar cylinder:
- Cylinder thermostat (**7**) and primary heating circuit thermal cut-out (**8**)
- Electric immersion heater (**6**) with thermal cut-out and cylinder thermostat
- Solar circuit thermal cut-out (**5**)

The cylinder must be properly wired in order to comply with G3 building regulations.

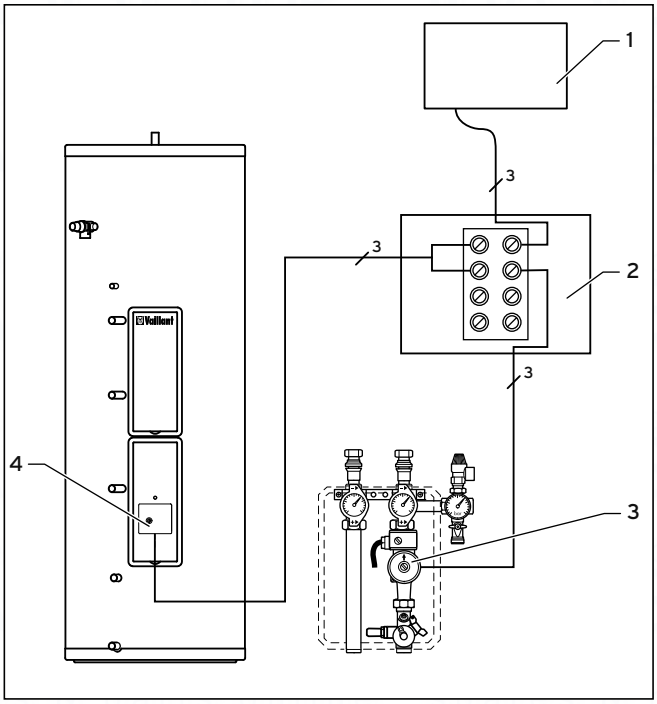

Fig. 4.3 Connection diagram for solar pump

Key
1 Solar controller or solar module
2 Terminal strip for series circuit to solar pump via TCO solar circuit
3 Solar pump
4 Solar circuit thermal cut-out

You must connect the solar pump to the solar controller via the solar circuit thermal cut-out (**5**) (**→ section 6.8**). The thermostat switches the solar pump off if the hot water temperature in the cylinder exceeds 80 °C. Set the maximum cylinder temperature (MAXT 1) to 75 °C (factory setting) on the auroMATIC VRS 560 solar controller.

Electric immersion heater

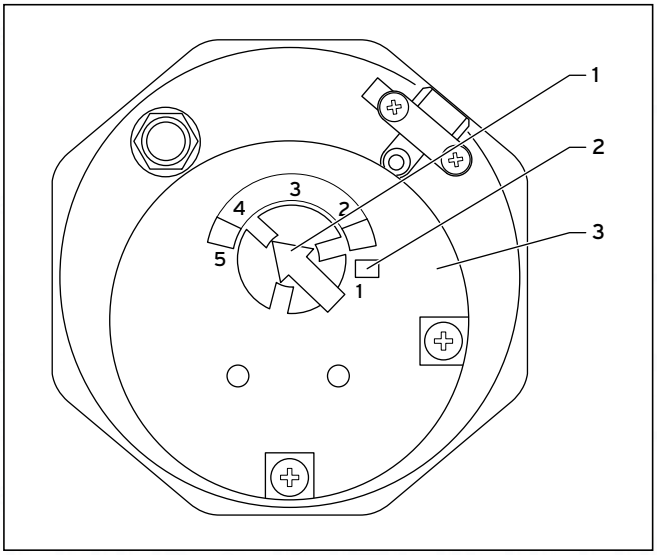

Fig. 4.4 Electric immersion heater operating elements

Key
1 Electric immersion heater temperature controller
2 Electric immersion heater TCO reset button
3 Electric immersion heater

The cylinder is equipped with an additional electric immersion heater (**3**) with a heating output of 3 kW. The electric immersion heater is located behind the top front cladding. The electric immersion heater is designed for use in unvented cylinders and has a thermostat with a temperature controller (**1**) and a thermal cut-out (TCO) with a reset button (**2**).

If you need to make a replacement, you must use the correct electric immersion heater with a thermal cut-out for overheating protection. The seal of the electric immersion heater must also always be replaced. Use only original replacement parts from Vaillant Ltd.

Setting the hot water temperature
You can set the hot water temperature by pointing the arrow on the temperature controller (**1**) of the electric immersion heater to a number between 1 and 5. The following table contains the approximate hot water temperature for each of the five settings.

Setting	Hot water temperature
1	20 °C
2	35 °C
3	45 °C
4	60 °C
5	68 °C

Table 4.1 Setting the hot water temperature

4.2 Solar fluid

4.2.1 Properties of solar fluid

This information applies to Vaillant solar fluid (20 l canister: article number 302498 and 10 l canister: article number 302363).
Vaillant solar fluid is a ready-mixed frost and corrosion protection agent, consisting of approximately 45% propylene glycol with anti-corrosion inhibitors and 55% water.

Vaillant solar fluid is extremely temperature-resistant and can be used in conjunction with Vaillant tube collectors and Vaillant flat collectors.
The solar fluid also has a high heat capacity.
The inhibitors provide reliable corrosion protection when different types of metal are used (mixed installations).

Caution!
Risk of damaging the collectors and other system parts if unsuitable solar fluid is used.
If you mix the solar fluid with water or another liquid, frost and corrosion protection cannot be ensured.
➤ Never mix the solar fluid with water or another liquid.

Do not use any other frost protection agents or inhibitors for the Vaillant solar heating system. Only Vaillant's solar fluid is permitted for use with the system.

Vaillant solar fluid is infinitely durable in hermetically sealed containers.
It is not dangerous if it comes into contact with the skin.
Eye contact only causes minor irritations, you should nevertheless immediately wash your eyes.
Pay attention to the safety data sheet
(→ **section 4.2.4**).

4.2.2 Solar circuit frost and corrosion protection system

In order to reliably protect the solar heating system from frost in winter, you must fill the entire system with undiluted Vaillant solar fluid.

Filling the solar heating system with Vaillant solar fluid provides frost protection up to approx. -28 °C.
Even at outside temperatures of lower than -28 °C, frost damage does not occur straight away since the explosive effect of the water is distributed. Check the frost protection effect after filling the system and then once every year.

We recommend the Vaillant refractometer for quick and simple checking. A classic Vaillant frost protection tester can be used for this.
See the enclosed operating instructions.

4.2.3 Cylinder frost protection

If you want to put a cylinder out of operation where it may be at risk from frost, you must drain it completely.
It is drained at the cold water inlet with a T-piece with tap to be provided by the installer.
Any heat exchangers not filled with solar fluid in rooms which are at risk of frost must also be completely drained.

4.2.4 Safety data sheet for Vaillant solar fluid

1) Name of substance/preparation and company details:

1a) Trade name:
Vaillant ready-mixed solar fluid

1b) Use:
Heat transfer fluid for solar heating systems

1c) Company:
Vaillant GmbH
Berghauser Str. 40
42859 Remscheid, Germany
Tel. 0049 (0) 2191 18-0, Fax 0049 (0) 2191 18-2810

1d) Emergency information:
your local poison information centre
(see directory assistance or telephone directory).

2) Possible dangers:

2a) Special danger indications for people and the environment: Not required!

3) Composition/information on ingredients:

3a) Chemical nature:
Aqueous solution of 1.2-propylene glycol
(CAS no.: 57-55-6) with corrosion inhibitors.

3b) Hazardous ingredients:
1,1'-iminodipropan-2-ol
content (w/w): > 1 % - < 3 %, CAS no.: 110-97-4
EC no.: 203-820-9, hazard symbol: Xi
INDEX no: 603-083-00-7, R phrases: 36
If hazardous ingredients are named, the wording for the hazard symbols and R phrases will be provided in Point 16.

4) First aid measures:

4a) General information:
Remove dirty clothes.

4b) After inhalation:
Discomfort after inhaling fumes/aerosol:
fresh air, help from a doctor.

4c) After skin contact:
Wash off with water and soap.

4d) After contact with the eyes:
Thoroughly rinse out with running water for at least 15 minutes with the eyes open.

4e) After swallowing:
Rinse mouth and drink lots of water.

4f) Information for the doctor:
Treatment of symptoms (decontamination, vital function), no specific antidote known.

5) Firefighting measures:

5a) The product is not flammable. Surrounding fire can be combated with sprayed water, dry extinguishers, alcohol-resistant foam, and carbon dioxide (CO_2).

5b) Special dangers: Fumes which are detrimental to health. Formation of smoke/mist. The specified substances/substance groups may be released in the event of a fire.

5c) Special protection equipment: Wear a breathing apparatus which is independent of the circulating air in the event of a fire.

5d) Further information: The dangers depend on the burning substances and the fire conditions. Polluted fire water must be disposed of according to local official regulations.

6) Measures in the case of accidental release:

6a) Precautions to protect persons:
No particular measures required.

6b) Measures to protect the environment:
Contaminated water/fire water must be withheld.
It must not be discharged into bodies of water without being pre-treated first (in a biological waste water treatment plant).

6c) Cleaning/collection procedure:
Contain any escaped material and cover with large quantities of sand, soil, or another absorbing material; then sweep enthusiastically to promote absorption.
Fill the mixture into containers or plastic bags and take away for disposal.
Wash away small amounts (splashes) with large quantities of water. For large quantities, pump out the product, collect it up and take it away for disposal. If larger quantities may have entered the drainage system or water bodies, contact the responsible water authorities.

7) Handling and storage:

7a) Handling:
No particular measures required.

7b) Fire and explosion protection:
No particular measures required.

7c) Storage:
Containers must be closed so that they are airtight and stored in a dry location.
Galvanised storage containers must not be used.

8) Exposure prevention and personal protective equipment:

8a) Personal protective equipment:
Breathing protection: Breathing protection if vapours/aerosols are released.
Hand protection: chemical-resistant protective gloves (EN 374).
Recommended: Nitrile rubber (NBR), protection class 6.
Owing to the large variety of types, observe the manufacturers' operating instructions.
Eye protection: Safety glasses with lateral protection (framed glasses) (EN 166)

8b) General protection and hygiene measures:
The usual precautions for working with chemicals must be observed.

9) Physical and chemical properties:

Form: Liquid.
Colour: Fluorescent red.
Smell: Product-specific.
Freezing point: Approx. -25 °C (ASTM D 1177)
Solidification point: Approx. -31 °C (DIN 51583)
Boiling point: >100 °C (ASTM D 1120)
Flashpoint: N/A
Lower explosion limit: 2.6 vol% (propylene glycol)
Upper explosion limit: 12.6 vol% (propylene glycol)
Ignition temperature: N/A
Vapour pressure (20° C): 20 mbar
Density (20 °C): Approx. 1,030 g/cm^3 (DIN 51757)
Solubility in water: Completely soluble
Solubility in other solvents: Soluble in polar solvents
pH value (20 °C): 9.0 - 10.5 (ASTM D 1287)
Viscosity (kinematic at 20 °C): Approx. 5.0 mm^2/s (DIN 51562)

10) Stability and reactivity:

10a) Substances to be avoided:
Strong oxidants

10b) Hazardous reactions:
No dangerous reactions if the storage and handling regulations/notes are observed

10c) Hazardous decomposition products:
No dangerous decomposition products if the storage and handling regulations/notes are observed.

11) Toxicology information:

LD50/oral/rat: > 2000 mg/kg
Primary skin irritation (rabbits):
Non-irritant (OECD Directive 404).
Primary mucous membrane irritation (rabbits):
Non-irritant (OECD Directive 405).

11a) Additional information:
The product has not been checked. The statements are derived from the properties of the individual components.

12) Ecology information:

12a) Ecotoxicity:
Fish toxicity: Leuciscus idus/LC50 (96 h):
> 100 mg/l
Aquatic invertebrates: EC50 (48 h): > 100 mg/l
Aquatic plants: EC50 (72 h): > 100 mg/l
Micro-organisms/effect on activated sludge:
DEV-L2 > 1000 mg/l. If low concentrations are properly introduced into adapted biological waste water treatment plants, no disturbances of the degradation activity of activated sludge are to be expected.

12b) Assessment of aquatic toxicity:
The product has not been checked. The statements are derived from the properties of the individual components.

12c) Persistence and degradability:
Details regarding elimination:
OECD 301A test method (new version)
Analysis method: DOC acceptance
Degree of elimination: > 70 %
Assessment: easily biodegradable.

13) Information on disposal:

13a) Disposal:
When disposing of the fluid, you must observe all local regulations, e.g. take the waste to a suitable dump or incinerator. For quantities of less than 100 l, contact the local city cleaning department or mobile environmental service.

13b) Contaminated packaging:
Uncontaminated packaging can be reused. Packaging that cannot be cleaned must be disposed of in the same way as the material.

14) Information on transport:

Not dangerous goods in terms of the transport regulations.
(ADR RID ADNR IMDG/GGV, see ICAO/IATA)

15) Legislation:

15a) European Union legislation (labelling)/national regulations:
EU Directive 1999/45/EC
(Dangerous Preparations Directive):
No labelling obligation

15b) Other legislation:
Water hazard class 1: Low hazard to water (Germany, VwVwS of 17.05.1999).

16) Other information

Complete wording for hazard symbols and R phrases if stated in "Hazardous ingredients" in section 3: Xi: Irritant. R36: Irritates the eyes.
All information which has been changed since the last edition is identified by means of a vertical slash on the left-hand side of the passage in question.
In such cases, the information shown in older editions loses its validity.
The safety data sheet is intended to communicate the most important physical, safety-related, toxicological, and ecological information to be observed when working with chemicals and preparations and to provide recommendations for safe use and/or storage, handling, and transport. No liability is assumed for damage in connection with the usage of this information or the usage, application, adaptation or processing of the products described here. This does not apply as long as we, our statutory agents or assistants are liable in the event
of intention or gross negligence. No liability is assumed for indirect damage.
This information has been compiled to the best of our knowledge and conscience according to our current state of knowledge. No guarantee can be made for product properties.

17) Valid as of: 01.01.2009
Created by: Vaillant GmbH.

4.3 System configuration

The Vaillant solar heating system enables various system configurations and control types in accordance with the connection wiring diagrams 1 to 6 (→ **section 6.8**).

Single-channel eBUS controllers are not suitable for this system configuration.

Wiring

If you use an eBUS-compatible Vaillant gas-fired wall-hung boiler, you can use one of the Vaillant Control Centres to wire the system.
For all other gas-fired wall-hung boilers, you can use a standard cabling box.

4.3.1 Vaillant controllers and their basic functions

VRS 560/2 solar controller

The auroMATIC 560/2 solar controller is a differential temperature-controlled control set for solar-aided hot water production with demand-controlled primary heating for Vaillant gas-fired wall-hung boilers.
The control set is a fully equipped system for solar heating systems with a collector array and cylinder.
If a solar yield temperature sensor (VR 10, supplied with controller) is connected, the solar yield can be recorded.

Control Centre

A Vaillant Control Centre provides a system solution which allows the Vaillant dual-channel eBUS controller (low-voltage) to be used in the English market with valves and domestic hot water cylinders with conventional 230 V cylinder thermostats.
The Control Centre sends the information on the heat requirement of the cylinder to the Vaillant ecoTEC gas-fired wall-hung boiler. The gas-fired wall-hung boiler decides whether a hot water requirement needs to be met and sends a signal to control the 230 V valves via the Control Centre.
The gas-fired wall-hung boiler can thus hold different set temperature values for heating mode and for hot water handling.
A Control Centre can be used to integrate commonly available 230 V S plan or Y plan components into the Vaillant eBUS system.

VRC weather compensator
(VRC 430, VRC 430f, VRC 470, VRC 470f)

A VRC controller controls the solar heating system in a weather-compensated and time-dependent manner with or without hot water production/a circulation pump in conjunction with a Vaillant gas-fired wall-hung boiler with an eBUS interface and the Vaillant VR 68/2 solar module.

Solar module VR 68/2

The VR 68/2 solar module integrates a solar heating system into the control concept of a VRC controller. In conjunction with a VRC controller , various solar heating system configurations can be implemented and the solar yield recorded. You can combine the VR 68/2 solar module with a VR 61/2 mixer module in a solar heating system.

VR 61/2 mixer module

The VR 61/2 mixer module is a system component which controls a cylinder charging circuit or circulation pump in conjunction with a VRC controller.
You can use the VR 61/2 mixer module to control a solar heating system for the heating of potable water in conjunction with a VRC controller and the VR 68/2 solar module.

4.3.2 Control functions

Hot water temperature control
The hot water temperature in the top half of the cylinder can be controlled in one of the following ways:
- Vaillant auroMATIC VRS 560/2 solar controller or
- using one of the Vaillant Control Centre's with the Vaillant dual-channel eBUS controller
- Vaillant VRC weather compensator with VR 61/2 mixer module and VR 68/2 solar module or
- using the cylinder thermostat in conjunction with a timer.

If you are using a controller by a third-party manufacturer, you use this controller to adjust the hot water temperature. In this case, the Vaillant controller (e.g. auroMATIC 560/2) acts only as a solar controller and only controls the temperatures for solar water heating.

Solar circuit control system
The solar circuit can be controlled in one of the following ways:

VRS 560/2
(connection wiring diagrams 1, 2, 3, 4, and 6, → section 6.8)
The lower cylinder sensor (SP 2) and the solar yield temperature sensor are connected up to the VRS 560/2. The solar pump is controlled via the VRS 560/2.

VRC with VR 68/2
(connection wiring diagram 5, → section 6.8)
The lower cylinder sensor (SP 2) and the solar yield temperature sensor are connected up to the VR 68/2. The solar pump is controlled via a VRC.

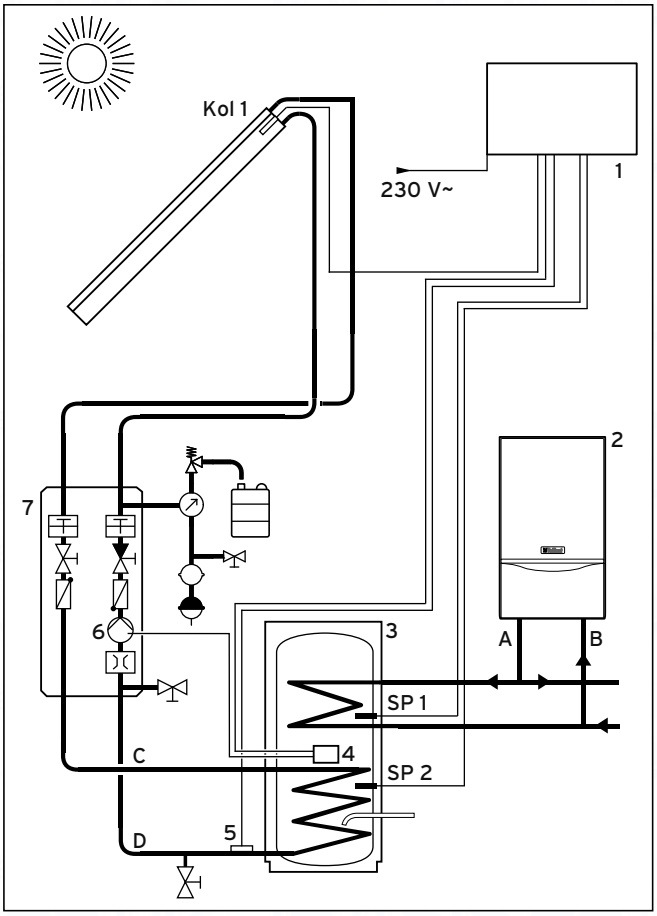

Fig. 4.5 Temperature differential control of solar pump

Key
1 Solar controller or solar module
2 Gas-fired wall-hung boiler
3 Solar cylinder
4 Solar circuit thermal cut-out
5 Solar yield temperature sensor
6 Solar pump
7 Solar pump unit
Kol 1 Collector sensor for flow line collector temperature
SP1 Cylinder sensor for upper cylinder temperature (primary heating circuit/standby section)
SP 2 Cylinder sensor for lower cylinder temperature (solar circuit)
A Primary heater flow
B Primary heater return
C Solar flow
D Solar return

Temperature differences, not absolute temperature values, are important for the operation of solar heating systems. For this reason, solar heating systems are controlled via temperature differential controllers.
Integrated temperature sensors record the temperature difference between the collector and the cylinder.
If the temperature difference (Kol 1 – SP 2) is larger than 7 K, the solar heating system's solar pump is switched on.
If the temperature difference (Kol 1 – SP 2) is smaller than 3 K, the solar heating system's solar pump is switched off.

Primary heating circuit control system
The primary heating circuit can be controlled in one of the following ways:

Vaillant dual-channel eBUS controller with Vaillant Control Centre (connection wiring diagrams 1 and 2, → section 6.8)

Important:
Terminals **NTC** and **CYL.** of the Vaillant Control Centre may not be connected at the same time.

- Option 1: The upper cylinder sensor **NTC** is connected to terminal **NTC** of the Vaillant Control Centre.

The recharging of the cylinder is controlled via the eBUS controller. Here, the cylinder temperature is measured using the cylinder sensor **NTC**. The temperature is compared with the target value programmed in the eBUS controller and the cylinder is reheated if necessary.

- Option 2: The cylinder thermostat is connected up to terminal **CYL.** of the Vaillant Control Centre.

The recharging of the cylinder is triggered via the cylinder thermostat. If the actual value falls below the target temperature set on the cylinder thermostat, the cylinder thermostat is shut. The closing of the cylinder thermostat is registered by the Vaillant Control Centre and passed onto the eBUS controller.
The eBUS controller releases the recharging of the cylinder for the programmed primary heating times:
The primary heating device activates and the Vaillant Control Centre switches the zone valves into the correct position for the recharging of the cylinder.
The required zone valve position differs depending on whether the S plan is being used:
- S plan: Valve **CH** closed, valve **DHW** open.

VRS 560/2
(connection wiring diagrams 3 and 4, → section 6.8)
The upper cylinder sensor is connected to the terminal **SP 1** of the VRS 560/2.
The output EP of the VRS 560/2 is connected to the input **CYL.** of the Vaillant Control Centre.
The recharging of the cylinder is controlled via the VRS 560/2. Here, the sensor **SP 1** measures the cylinder temperature. The temperature is compared with the programmed target value in the VRS 560/2.
Within the primary heating times programmed in the VRS 560/2, the contact **EP** is closed if the actual value falls below the target temperature for the cylinder.
The closing of the contact **EP** is registered by the Vaillant Control Centre and the recharging of the cylinder is triggered: The primary heating device activates and the Vaillant Control Centre switches the zone valves into the correct position for the recharging of the cylinder.
The required zone valve position differs depending on whether the S plan is being used:
- S plan: Valve **CH** closed, valve **DHW** open.

Vaillant dual-channel eBUS controller with VR 68/2 (connection wiring diagram 5, → section 6.8)
The upper cylinder sensor is connected to the terminal **SP 1** of the VR 68/2.
The recharging of the cylinder is controlled via the eBUS controller, which is connected with the VR 68/2 and VR 61/2 via eBUS. The zone valves are switched via the VR 61/2 (valve DHW open, heating circuit valve closed).

VRS 560/2 in conjunction with non-eBUS-compatible controllers (connection wiring diagram 6, → section 6.8)
The upper cylinder sensor is connected to the terminal **SP 1** of the VRS 560/2.
The output **EP** of the VRS 560/2 is connected to the wiring of the S plan via the cylinder thermostat.
Important:
The target temperature on the cylinder thermostat must be set to the maximum temperature!

The recharging of the cylinder is controlled via the VRS 560/2. Here, the sensor **SP 1** measures the cylinder temperature. The temperature is compared with the programmed target value in the VRS 560/2.
Within the primary heating times programmed in the VRS 560/2, the contact **EP** is closed if the actual value falls below the target temperature for the cylinder.
The switching signal is coupled into an S plan and the recharging of the cylinder is triggered.

Room heating control
The room heating can be controlled in one of the following ways:

Vaillant dual-channel eBUS controller with Vaillant Control Centre (connection wiring diagrams 1, 2, 3, and 4, → section 6.8)
The room heating is controlled by the Vaillant eBUS controller.
The actuation of the valves (S plan plan) is controlled by the Vaillant Control Centre.

Vaillant dual-channel eBUS controller with VR 61/2 (connection wiring diagram 5, → section 6.8)
The room heating is controlled by the Vaillant eBUS controller.
The actuation of the valves (S plan plan) is controlled by the VR 61/2.

Programmable timer and room thermostat (connection wiring diagram 6, → section 6.8)
The room heating is controlled using a programmable timer and a room thermostat.
The actuation of the valves (S plan) is realised via the programmable timer and DHW timer.

4.3.3 Technical data of the auroSTOR solar cylinder

	Unit	VIH S GB 210/2 S	VIH S GB 260/2 S	VIH S GB 310/2 S
Total capacity	litres	210	260	310
Actual capacity	litres	209,4	254,4	297,2
Hot water capacity (upper coil)	litres	104,8	142,0	144,2
Hot water capacity (solar coil)	litres	203,3	246,1	271,1
Dedicated solar volume	litres	104,6	112,4	153,0
Maximum supply pressure to pressure reducing valve	MPA (bar)	1,2 (12)		
Rated pressure of cylinder	MPA (bar)	0,7 (7)		
Maximum operating pressure of heating coil	MPA (bar)	0,35 (3,5)		
Maximum operating pressure of solar coil	MPA (bar)	0,6 (6)		
Operating pressure	MPA (bar)	0,35 (3,5)		
Pressure limiting valve	MPA (bar)	0,35 (3,5)		
Expansion relief valve	MPA (bar)	0,6 (6)		
Temperature and pressure relief valve	°C, MPA (bar)	90, 0,7 (7)		
Charge pressure of hot water expansion vessel	MPA (bar)	0,4 (4)		
Maximum temperature of heating circuit	°C	85		
Maximum temperature of potable hot water	°C	85		
Maximum temperature of solar fluid	°C	85		
Standing heat loss	kW/24 h	1,98	2,15	2,35
Heat up time according to EN 12897	mins	20	27	28
Recovery time (70% capacity)	mins	15	20	21
Primary heat exchanger performance	kW	16,7	16,5	16,0
Flow rate for primary heat exchanger performance	l/min	23,3		
Primary heat exchanger pressure drop	mbar	79	78	79
Primary heat exchanger volume	Liter	2,37		
Primary heat exchanger surface area	m^2	0,5		
Heat up time according to EN 12897 (solar)	min	32	40	49
Solar heat exchanger performance	kW	19,7	19,5	17,2
Flow rate for solar heat exchanger output	l/min	23,3		
Solar heat exchanger pressure drop	mbar	97	95	98
Solar heat exchanger volume	Liter	2,94		
Solar heat exchanger surface area	m^2	0,62		
Dimensions				
Height	mm	1593	1843	2153
Height with hot water draw off	mm	1625	1875	2185
Topple measure	mm	1680	1918	2217
Diameter	mm	554,5		
Depth	mm	633		
Net weight	kg	40	43	50
Weight (full)	kg	249	298	347
Connections				
Cold water inlet		22 mm unprofiled pipe (crimp joints)		
Hot water draw off		22 mm unprofiled pipe (crimp joints)		
Balanced pressure cold water outlet		22 mm unprofiled pipe (crimp joints)		
Secondary return		15 mm unprofiled pipe (crimp joints)		
Primary heater flow		22 mm unprofiled pipe (crimp joints)		
Primary heater return		22 mm unprofiled pipe (crimp joints)		
Solar flow		22 mm unprofiled pipe (crimp joints)		
Solar return		22 mm unprofiled pipe (crimp joints)		
Primary heating circuit cylinder dry pocket size	mm	8		
Solar circuit cylinder dry pocket size	mm	8		

Tab. 4.2 Technical data for auroSTOR solar cylinder

	Unit	VIH S GB 210/2 S	VIH S GB 260/2 S	VIH S GB 310/2 S
Electrical connections				
Immersion heater (according to EN BS 60335)		2.7 kW, 230 V, 50 Hz		
Length of immersion heater	inch	14		
Two port motorised valve		230/240 V, 50 Hz		
Cylinder thermostat		230/240 V, 50 Hz		
Thermal cut-out solar		230/240 V, 50 Hz		
Material data				
Cylinder body material		Stainless steel (1.4521)		
Cylinder jacket material		Polypropylene		
Insulation material		EPS with infrared absorber		
Insulation thickness	mm	50		
Corrosion protection		Stainless steel		
Blowing agent for insulation material		Pentane (GWP < 5)		
ODP		0		

Tab. 4.2 Technical data for auroSTOR solar cylinder (continued)

The heat up time is based on a flow rate of 1400 l/h at 80 °C.
Temperature rise from 15 °C to 60 °C.

4.3.4 Dimensions

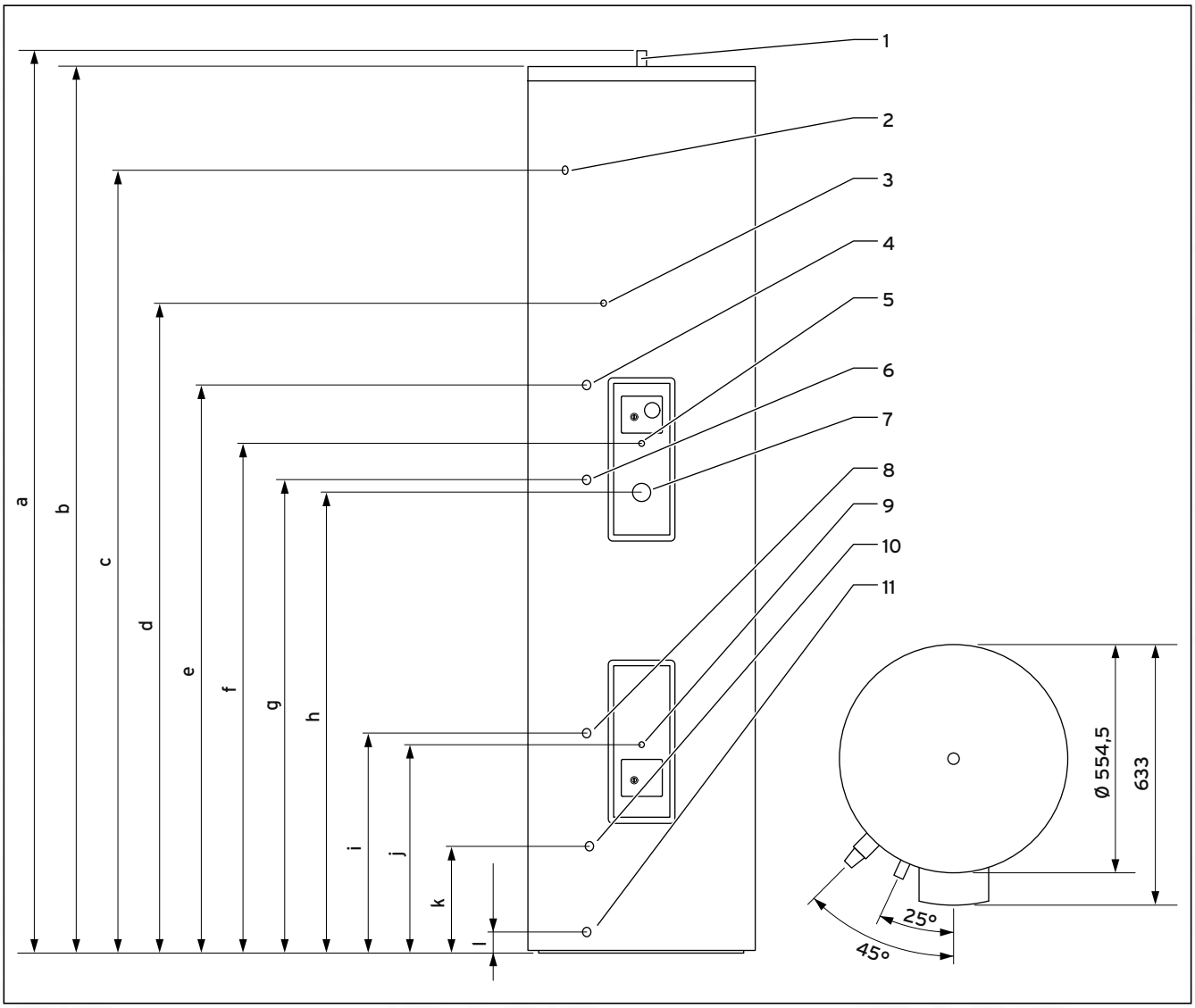

Fig. 4.6 Dimensions of the auroSTOR solar cylinder

Key

1 Hot water draw off
2 Temperature and pressure relief valve connection
3 Secondary return
4 Primary heater flow
5 Primary heating circuit cylinder dry pocket (SP 1)
6 Primary heater return
7 Electric immersion heater
8 Solar flow
9 Solar circuit cylinder dry pocket (SP 2)
10 Cold mains inlet connection
11 Solar return

Unit type	a	b	c	d	e	f	g	h	i	j	k	l
VIH S GB 210/2 S	1625	1593	1341	1158	1052	912	822	802	534	506	259	51
VIH S GB 260/2 S	1875	1843	1591	1346	1102	962	872	852	534	506	259	51
VIH S GB 310/2 S	2185	2153	1901	1578	1377	1237	1147	1127	534	506	259	51

Tab. 4.3 Dimensions

5 Assembly

5.1 Scope of delivery

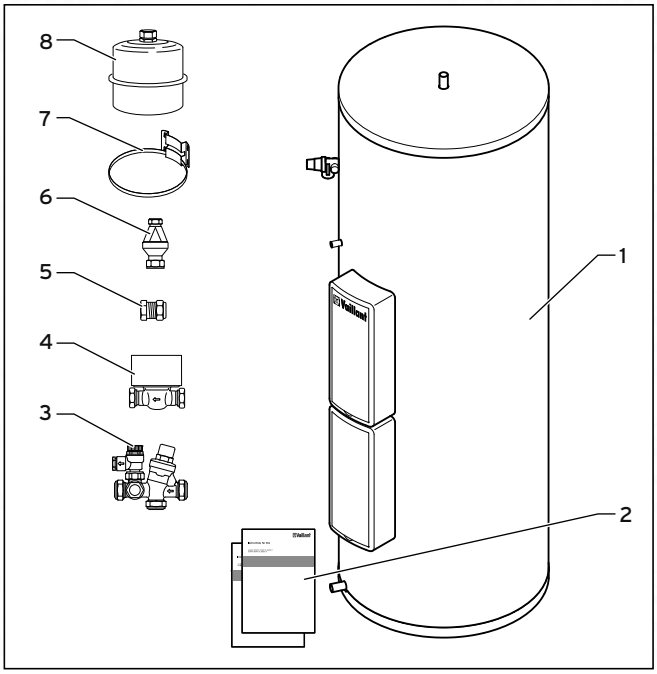

Fig. 5.1 Scope of delivery

Item	Quantity	Component
1	1	Domestic hot water cylinder with insulation in separate packaging
2	2	Instructions on commissioning, maintenance, and troubleshooting and operating instructions (packaged with the cylinder)
In separate packaging:		
3	1	Safety assembly (pressure reducing valve, expansion relief valve, connections for pressure-controlled cold water inlet and hot water expansion vessel)
4	1	Two port motorised valve
5	1	15 mm compression cap for secondary return
6	1	Tundish
7	1	Assembly set for hot water expansion vessel
8	1	Hot water expansion vessel: 12 l for VIH GB 120/2 S and VIH GB 155/2 S 18 l for VIH GB 180/2 S and VIH GB 210/2 S 25 l for VIH GB 260/2 S and VIH GB 310/2 S

Table 5.1 Scope of delivery

- ➤ Check the scope of delivery for completeness.
- ➤ Make sure the cylinder is stored in an upright position in a dry environment prior to its installation.

5.2 Transporting the cylinder

Danger!
Risk of injury due to heavy load!
Heavy load can cause injuries.
- ➤ At least two people should lift the cylinder to prevent injuries.
- ➤ Use a suitable transportation aid (sack truck or similar).

- ➤ Transport the packaged cylinder to the installation site.
- ➤ Only remove the cylinder from its packaging once it reaches the installation site.

5.3 Requirements for installation site

Position the domestic hot water cylinder as near as possible to the heater to prevent unnecessary heat loss.

Place the cylinder in a suitable location in the building, paying attention to the following:
- The tundish discharge pipe must be installed with a minimum slope of 1:200 and must end in a safe and visible place (→ **section 6.7**).
- The installation surface must be flat and capable of bearing the weight of the entire cylinder (→ **section 5.3**).
- The installation site must not be at risk of frost. If necessary, install a frost protection thermostat.
- The control system for the installed cylinder thermostat beneath the front plate must be easily accessible to the operator.
- There must be sufficient space for the assembly, check, and pressure build-up of the expansion vessel.
- There must be sufficient space for mounting, maintaining and replacing the electric immersion heater.
- The floor must be even.
- ➤ Choose a cylinder installation site that allows the potable water and heating lines to be laid in an appropriate manner.
- ➤ To prevent energy losses in accordance with the Heating Equipment Ordinance, provide all system pipes with thermal insulation.

6 Installation

6.1 Installation sequence

Install the solar heating system in the following order:
- Solar collectors and solar pump unit
- Cylinder
- Solar circuit piping
- Primary heating circuit piping
- Hot water piping, with secondary circulation line if required
- Cold water piping
- Discharge pipes
- Electrical installation

➤ Assemble the collectors in accordance with the assembly instructions supplied with the collector assembly set.
➤ Install the solar pump unit in accordance with the installation instructions supplied with the solar pump unit.
➤ For the rest of the installation process, proceed as described in the sections below.

6.2 Installation of solar circuit piping

6.2.1 Piping material in the solar circuit

All Vaillant solar sets are supplied with pipes made from stainless steel with DN fittings.

Caution!
Risk of damage to the system if the wrong piping material is used in the solar circuit!
The solar fluid can reach high temperatures and leaks can occur if the wrong piping material is used (e.g. PE pipes and Teflon band).
➤ You should preferably use copper pipes in the solar circuit.
➤ Use brazing solder to solder the piping in the solar circuit.
➤ Only use press fittings if the manufacturer has stated that they can be used up to
a temperature of 200 °C.

6.2.2 Layout of piping in the solar circuit

The correct choice of pipe diameter is vital to ensure the optimum efficiency of the solar heating system.
To keep the pressure loss in the solar circuit as low as possible, the flow velocity in the pipe must not be more than 1.5 m/s.
At the same time, the flow velocity must be at least 0.4 m/s to transport air bubbles from the collectors downwards to the air vents (→ **section 6.2.4**).
A nominal flow rate of 0.66 l/min is required for the flat collectors and a nominal flow rate of 0.4 l/min per m^2 of net collector area is required for the vacuum tube collectors in order to achieve optimum heat transfer (→ **table 6.1 and 6.2**).
A further decisive factor to ensure that your solar heating system works as well as possible is the correct solar pump design. It must be possible for the solar pump to convey more than the nominal flow rate at the specified operating pressure. The selection of the required pump speed depends on the installed system. For a reference value for the selection of a solar pump, see section 7.4.

6.2.3 Realisation of solar circuit piping

Danger!
Risk of death from electric shock!
Incorrect installation or a faulty power cable can result in a supply voltage on the pipes, which can cause personal injury.
- Attach earthing pipe clamps to the pipes and connect the earthing pipe clamps to a potential equalisation bar using 16 mm^2 cable.

Caution!
Risk of damage to electronics resulting from lightning strikes!
Without potential equalisation, lightning can destroy the electronics in the solar heating system, heating system, or building.
- Earth the solar circuit in accordance with the requirements of "BS 7671 IEE Wiring Regulations". Attach earthing pipe clamps to the solar circuit pipes, for instance, and connect the earthing pipe clamps to a potential equalisation bar using 16 mm^2 cable.
- Connect the collectors to an existing building lightning protection system.

Caution!
Risk of damage to the collectors due to excessive pressure.
The safety devices in the solar circuit can be knocked out of operation if you install a two port motorised valve in the pipes of the solar heating system.
- Never install a two port motorised valve in the pipes of the solar heating system.

Observe the following points to ensure perfect operation with maximum energy utilisation:
- Ensure that the piping diameter is not too large, since this could result in low flow velocities in the solar heating system; this makes the system less efficient.
- Design all system components to ensure an even flow rate with the required nominal flow rate.
- Ensure sufficient heat protection for the pipes so that not too much heat energy is lost before it reaches the consumers. For pipes laid outside, choose weather- and UV-resistant insulation and insulation which is resistant to the pecking of birds.
- Vent the system completely for commissioning and maintenance, since air in the system significantly impairs its efficiency.

Nominal flow rate and pipe diameter in the solar circuit							
Flat collectors auroTHERM plus VFK 150 H/V, auroTHERM VFK 145 H/V				**Nominal flow rate ****		**Recommended diameter for copper piping and a total pipe length of:**	
Quantity	**Net area**	**Configuration Row x collector quantity for connection:**				**20 m**	**50 m**
Qty.	**in m²**	**On one side**	**Opposite sides**	**l/h**	**l/min**		
1	2,35	1 x 1	1 x 1	180	3	15 x 1	15 x 1
2	4,7	1 x 2	1 x 2	180	3	15 x 1	15 x 1
3	7,05	1 x 3	1 x 3	180	3	15 x 1	15 x 1
4	9,4	1 x 4	1 x 4 / 2 x 2	180	3	15 x 1	18 x 1
5	11,75	1 x 5	1 x 5	180	3	18 x 1	18 x 1
6	14,1	3 x 2 * / 2 x 3 *	1 x 6 / 3 x 2 * / 2 x 3 *	212	3,6	18 x 1	18 x 1
7	16,45		1 x 7	247	4,2	18 x 1	18 x 1
8	18,8	2 x 4 * / 4 x 2 *	2 x 4 / 4 x 2 / 1 x 8	282	4,7	18 x 1	22 x 1
9	21,15		1 x 9	318	5,3	22 x 1	22 x 1
10	23,5	2 x 5 * / 5 x 2 *	1 x 10 / 2 x 5 / 5 x 2	353	5,9	22 x 1	22 x 1
11	25,8		1 x 11	387	6,5	22 x 1	22 x 1
12	28,2		1 x 12 / 2 x 6 / 3 x 4 / 4 x 3	423	7,1	22 x 1	22 x 1
20	47		4 x 5 / 5 x 4	705	11,8	22 x 1	28 x 1.5
24	56,4		2 x 12 / 4 x 6 / 6 x 4 etc.	846	14,1	28 x 1.5	28 x 1.5
32	75,2		4 x 8 etc.	1128	18,8	28 x 1.5	28 x 1.5
* Only with parallel array connection ** At least 15 l/m² h in collector array or 3 l/min. in the solar circuit; in the case of larger systems, the flow rate in the collector array must be below 30 l/m² h.							

Tab. 6.1 Nominal flow rate in relation to collector quantity, pipe diameter, and pipe length

Nominal flow rate and pipe diameter in the solar circuit								
Parallel collector arrays	**Tube collectors**		**Net area in m²**	**VTK 1140/2 or 570/2 and 1140/2 in series**	**Recommended nominal flow rate**		**Minimum diameter for copper piping and a total pipe length of:**	
	VTK 570/2	**VTK 1140/2**						
	Qty.				**in l/h**	**in l/min**	**20 m**	**50 m**
1 collector array	2	-	2	2 x 1	180	3	12 x 1	15 x 1
	2	-	2	3 x 1	180	3	12 x 1	15 x 1
	-	2	4	1 x 2	180	3	12 x 1	15 x 1
	1	2	5	1x (1 + 2)	180	3	12 x 1	15 x 1
	-	3	6	1 x 3	180	3	12 x 1	15 x 1
	1	3	7	1 x (1 + 3)	210	3,5	15 x 1	15 x 1
	-	4	8	1 x 4	210	3,5	15 x 1	15 x 1
	1	4	9	1 x (1 + 4)	210	3,5	15 x 1	15 x 1
	-	5	10	1 x 5	210	3,5	15 x 1	15 x 1
	1	5	11	1 x (1 + 5)	240	4	18 x 1	18 x 1
	-	6	12	1 x 6	240	4	18 x 1	18 x 1
	1	6	13	1 x (1 + 6)	240	4	18 x 1	18 x 1
	-	7	14	1 x 7	240	4	18 x 1	18 x 1
2 parallel collector arrays	2	6	14	2 x (1 + 3)	300	5	18 x 1	18 x 1
	-	8	16	2 x 4	300	5	18 x 1	18 x 1
	2	8	18	2 x (1 + 4)	360	6	18 x 1	18 x 1
	-	10	20	2 x 5	360	6	18 x 1	18 x 1
	2	10	22	2 x (1 + 5)	420	7	18 x 1	22 x 1
	-	12	24	2 x 6	480	8	22 x 1	22 x 1
	2	12	26	2 x (1 + 6)	480	8	22 x 1	22 x 1
	-	14	28	2 x 7	480	8	22 x 1	22 x 1

Tab. 6.2 Design of pipe diameter and recommended nominal flow rate in relation to collector configuration for auroTHERM exclusive VTK 570/2 tube collectors

6.2.4 Venting the solar circuit

Danger!
Risk of burns and scalds resulting from escaping hot steam!
Hot steam can discharge from automatic air vents which are not shut off if the system is
in stagnation.
- ➤ Use automatic air vents with a manufacturer's release to at least 150 °C.
- ➤ Shut off the automatic air vents when operating the system.

Caution!
Malfunction due to air vents that are not shut off!
Vapourous solar fluid can escape from automatic air vents which are not shut off whilst the system is in stagnation. The loss of solar fluid results in functional problems.
- ➤ Close all automatic air vents once venting is complete.

Caution!
Malfunction due to unsuitable air vents!
Unsuitable air vents can be destroyed in solar mode.
- ➤ Only use Vaillant automatic air vents with
  a manufacturer's release to at least 150 °C.

Solar circuit filling with	Venting via			
	Vent opening for flat collectors	or	Automatic air vent with stop cock	Automatic air separator system
Hand pump	Absolutely vital			Alternative Recommended
Motorised filling pump (maximum flow rate of < 10 l/min)				
Motorised filling pump (maximum flow rate of > 10 l/min)	Not necessary			Recommended

Tab. 6.3 Selection of venting method in accordance with filling type

Air in the system impairs the efficiency of the solar heating system considerably. For this reason, there must be sufficient venting points in every solar circuit.

➤ Select one of the following venting methods in relation to the filling type of the solar circuit as per Tab. 6.3:
  - Only for flat collectors: Venting via the vent opening (→ **Fig. 6.1**)
  - Venting via an air separator system (→ **Fig. 6.2**)

Vent opening (only for flat collectors)

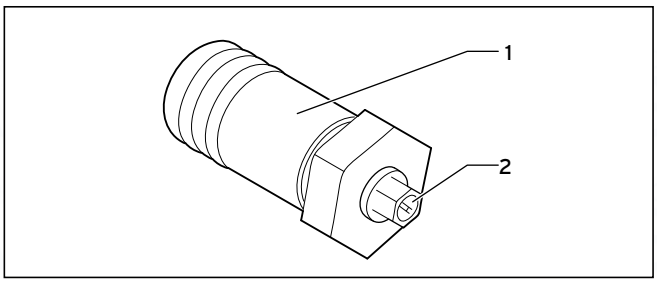

Fig. 6.1 Plug with vent opening for flat collectors

Key
1 Plug
2 Vent opening

The vent opening enables the venting of the solar circuit during filling and flushing, i.e. during commissioning or maintenance.

➤ For flat collectors, install a plug with a vent opening at the highest point.

Whilst the solar heating system is being operated, the vent opening must be closed to prevent the loss of fluid at times of stagnation.

Automatic air separator system

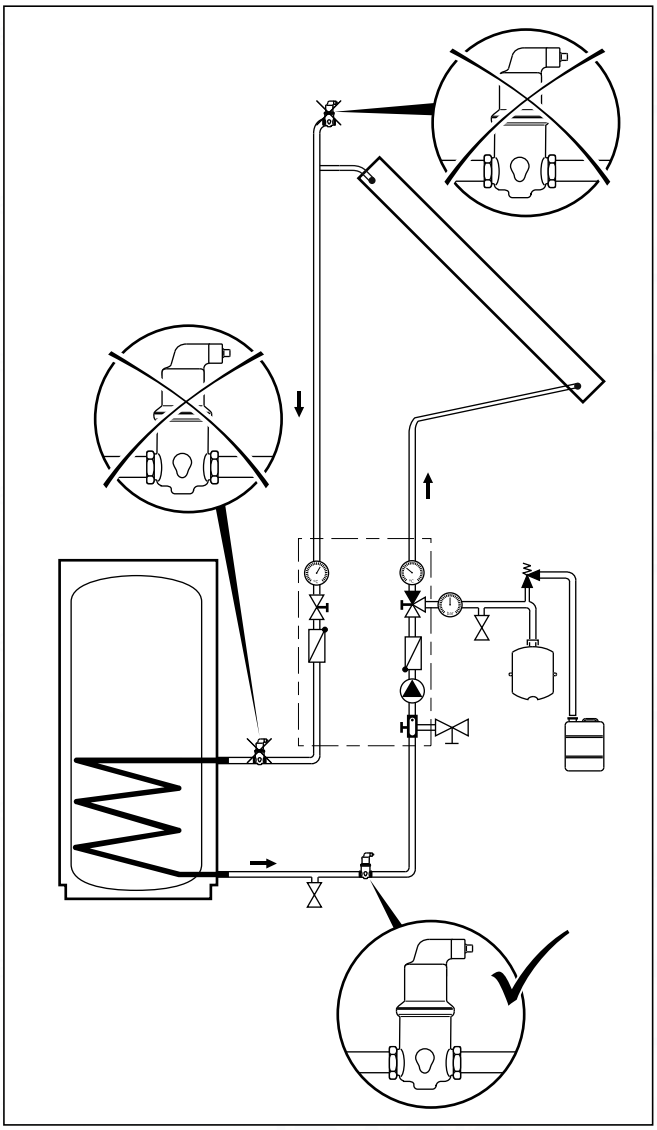

Fig. 6.2 Automatic air separator system

You can use the Vaillant automatic air separator system instead of an automatic air vent.
An air separator system vents the solar circuit completely automatically, both during filling and flushing and continuously whilst the solar heating system is being operated.

You must install an air separator system in an area where no steam will escape, preferably in the return line between the solar pump unit and the solar cylinder.

➤ Install the Vaillant automatic air separator system in accordance with the corresponding assembly instructions.

6.3 Pipes for the primary heating circuit

Make sure that the pipes in the primary heating circuit between the gas-fired wall-hung boiler and cylinder are as short as possible. Use copper piping with a minimum diameter of 22 mm.
A heating pump is installed in all Vaillant gas-fired wall-hung boilers (apart from the ecoMAX pro with open ventilation). If you are using the cylinder with another gas-fired wall-hung boiler as per GB standards, you may have to install a suitable heating pump in the primary heating circuit.

Installing the two port motorised valve

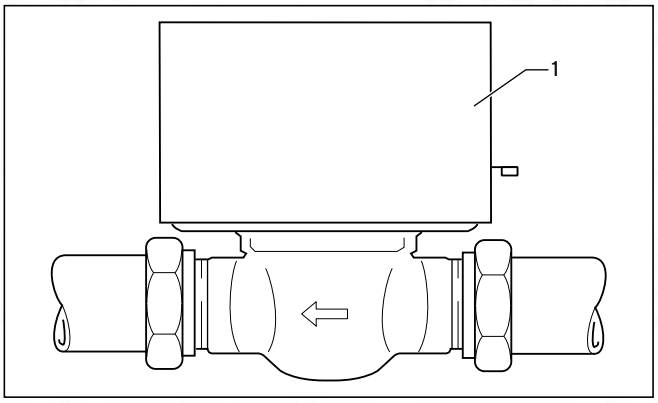

Fig. 6.3 Two port motorised valve

The two port motorised valve prevents the cylinder from overheating.

- Install the two port motorised valve (**1**) supplied with the cylinder in the flow line (**A → Fig. 3.1**) of the gas-fired wall-hung boiler.
- Note the direction of flow, which is marked with arrows.

You can install the 2-way motorised valve vertically or horizontally. If you install the 2-way motorised valve horizontally, you must install the valve with the valve head facing upwards (**→ fig. 6.3**).

6.4 Installing hot water pipes

- Connect the hot water piping to the 22 mm hot water draw off of the cylinder.
- Lay the 22 mm piping up to the first T-piece.

The required diameter of subsequent pipes depends on the system design.

Connecting up the secondary circulation line

The cylinder has a connection with a 15 mm diameter for a secondary circulation line.

- Connect a WRAS-approved circulation pump which has a non-return valve with the secondary return.
- Establish the connection to the secondary circulation line.

If a secondary circulation line is used, an additional expansion vessel may be required in some circumstances.

If you are not using the secondary return, this must be properly closed off with the cap included in delivery.

6.5 Hot water thermostat mixer

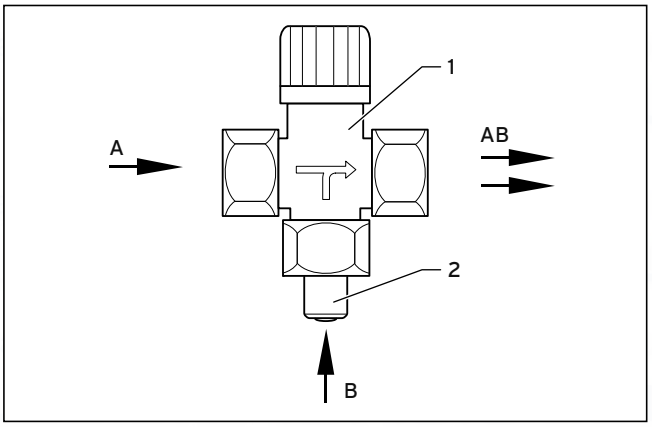

Fig. 6.4 Hot water thermostat mixer

Key
1 Thermostat mixer
2 Non Return Valve
A Hot water
B Cold water
AB Mixed water

In a solar heating system, a hot water thermostat mixer must be installed as scald protection. The hot water thermostat mixer mixes the hot water from the cylinder with cold water to produce water with a maximum temperature of between 30 and 60 °C as required.
The hot water thermostat mixer must be provided by the customer.

6.5.1 Installing the hot water thermostat mixer (without secondary circulation line)

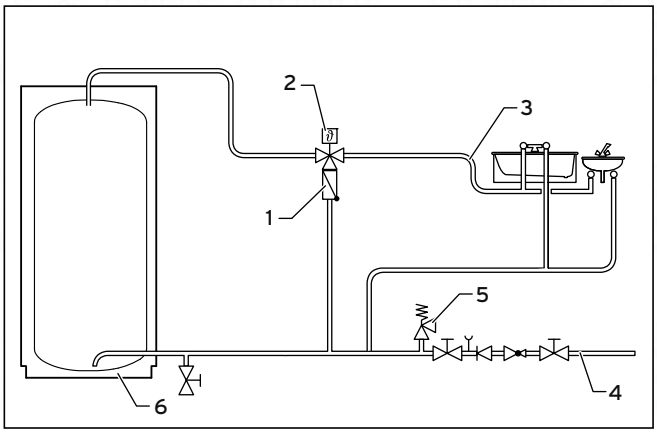

Fig. 6.5 Installing the hot water thermostat mixer (system without secondary circulation line)

Key
1 Non-return valve
2 Hot water thermostat mixer
3 Hot water pipe
4 Cold mains inlet
5 Expansion relief valve
6 Bivalenter solar cylinder

➤ Install a hot water thermostat mixer (**2**) in the hot water pipe (**3**).

6.5.2 Installing the hot water thermostat mixer (with secondary circulation line)

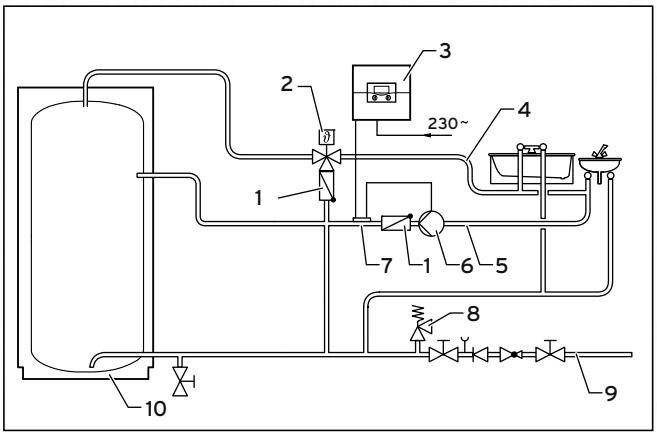

Fig. 6.6 Installing the hot water thermostat mixer (system with secondary circulation line)

Key
1 Non-return valve
2 Hot water thermostat mixer
3 Solar controller
4 Hot water pipe
5 Secondary circulation line
6 Circulation pump
7 Contact thermostat
8 Expansion relief valve
9 Cold mains inlet
10 Bivalent solar cylinder

Where possible, avoid installing a secondary circulation line, since a secondary circulation line results in higher energy consumption. If the installation of a secondary circulation line is required, keep circulation operations to a minimum by only using circulation mode when required for demand and temperature reasons.

➤ Connect the secondary circulation line (**5**) to the hot water pipe (**4**) via a hot water thermostat mixer (**2**).

6.5.3 Setting the hot water thermostat mixer

Danger!
Risk of burns and scalds!
Water at a temperature of more than 60 °C can escape from the water draw-off point.

➤ Set the hot water thermostat mixer to less than 60 °C and check the temperature at a hot water draw-off point.

➤ When commissioning the solar heating system for the first time, set the hot water thermostat mixer to the required maximum temperature.

This maximum temperature is observed at the hot water draw-off points.

6.6 Installation of cold mains inlet

6.6.1 Pressure in cold mains inlet

The efficiency of an unvented cylinder depends on the available pressure in the cold mains inlet and the flow rate. To obtain optimum cylinder output, there must be a suitable cold mains inlet, i.e. the measured static line pressure must be at least 2.0 bar. A corresponding flow rate of at least 20-25 l/min must be available.

The pressure in the cold mains inlet will be reduced at times of high consumption. Thus, measurements should be taken at such times. The cylinder still works satisfactorily with a pressure below 2 bar but the flow rate is reduced. If the pressure is below 1 bar, you should not install an unvented cylinder. Vaillant Ltd. can provide information on alternative hot water supply systems.

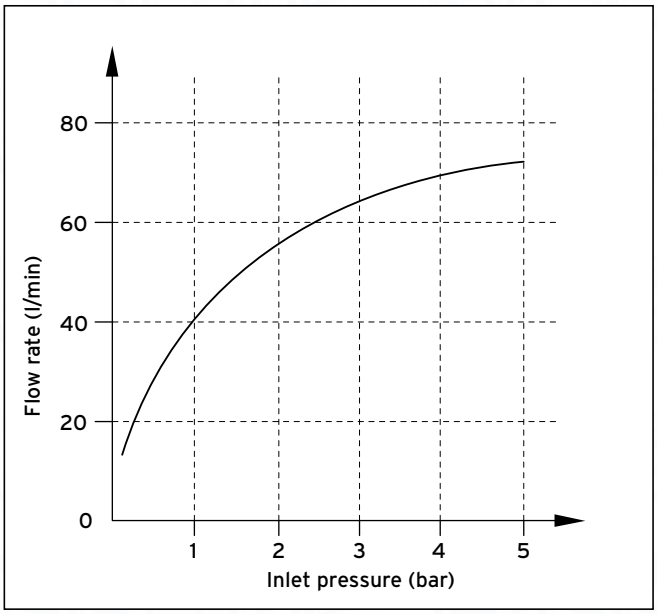

Fig. 6.7 Maximum flow rate of the cold water assembly based on the supply pressure

The displayed flow rates apply to installations in which the cold water supply has a dynamic pressure and flow rate appropriate for the system.
If the static water pressure is less than 1 bar, contact Vaillant Ltd.

6.6.2 Mounting the safety assembly

Caution!
Risk of damage to the cylinder as a result of excess pressure!
Excess pressure can cause the cylinder to burst.
➤ Make sure that there is no stop valve installed between the safety assembly and the cylinder.

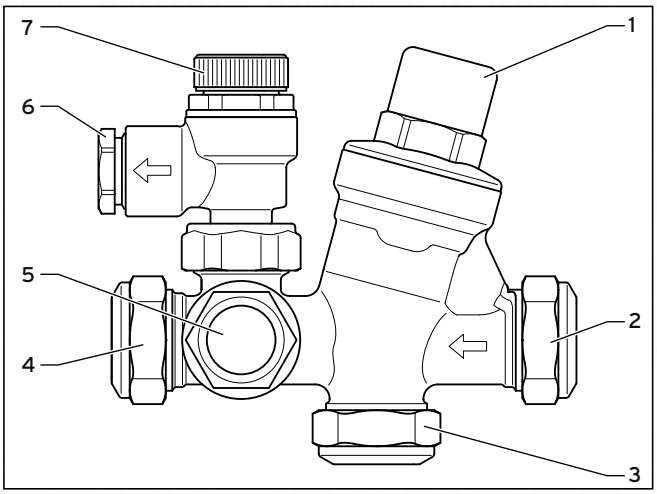

Fig. 6.8 Safety assembly

Key
1 Pressure reducing valve with line strainer
2 Cold water inlet
3 Pressure-controlled cold water inlet
4 Cylinder connection
5 Hot water expansion vessel connection
6 15 mm expansion relief valve connection
7 Expansion relief valve

➤ During the installation process, position the valves so that you are able to connect the 15 mm connection (**6**) of the expansion relief valve (**7**) with the tundish. Note the direction of flow, which is marked on the safety assembly with arrows.

The safety assembly must be installed horizontally with the expansion relief valve facing upwards (→ **Fig. 6.8**) in order to prevent the build-up of dirt.

Caution!
Risk of damage to the cylinder as a result of excess pressure!
Excess pressure can cause the cylinder to burst.
➤ Make sure that the expansion relief valve outlet is not covered or closed.

- Mount the discharge pipe of the expansion relief valve with a constant slope to the outside. The discharge pipe must finish at a safe and visible point where there is no danger of it freezing up and where it poses no risk of injury to persons.
- Actuate the expansion relief valve regularly to prevent calcification.
- Connect the cylinder to the cylinder connection (**4**).
- For the pipe from the main stop valve of the building to the cylinder, use copper piping with a diameter of at least 22 mm to ensure that the cylinder is as efficient as possible. This is particularly important for installations with a pressure-controlled cold water inlet (**3**).
- Mount the safety assembly in the cold mains inlet on the cylinder.
- If necessary, establish the connection to the cold water inlet (**3**) with pressure compensation of the safety assembly.
- Depending on the fittings used and the type of the draw-off points, it may be necessary to install a backflow preventer in the pressure-controlled cold water inlet.

If you mount the safety assembly above the cylinder, you do not need to drain the cylinder in order to maintain the safety assembly. Make sure there is sufficient space for maintenance and connection of the discharge pipe of the expansion relief valve.

When the discharge pipes are connected, the expansion relief valve may not be more than 600 mm away from the temperature and pressure relief valve (→ **fig. 6.9**).

6.6.3 Mounting the expansion vessel

The Vaillant solar cylinder is delivered with an external expansion vessel (ADG).
Connect this expansion vessel to the installed safety assembly as follows:

- Screw the expansion vessel directly to the safety assembly via the provided connection (**5**) or
- Connect the expansion vessel with the safety assembly via a copper pipe or suitable hose line. Make sure the expansion vessel is supported sufficiently.
- Use the supplied wall bracket if you want to mount the expansion vessel to a wall.

In regions with high water pressure (4 bar or more), you can also connect the mixer tap for a bath or shower to the cold water inlet with pressure compensation (3) of the safety assembly. This ensures that the hot and cold water supply to the mixer tap have the same pressure. You should install the cold water supply for all other connections using a T-piece before the safety assembly in the cold mains inlet to the cylinder.

6.6.4 Mounting the drain valve

- Mount a drain valve as low as possible between the cylinder and the safety assembly in the cold mains inlet (**10** → **Fig. 4.1**).

The drain valve must be provided by the customer.
We recommend mounting a hose which reaches about 1 m under the base of the cylinder to the outlet of the drain valve.

6.6.5 Laying the pipes to the tundish

- Connect the temperature and pressure relief valve and the expansion relief valve to the tundish using 15 mm piping.
- Lay the tundish discharge pipe (→ **section 6.7**).

The tundish discharge pipes must be laid at a sufficient distance from electrical components in accordance with valid building regulations.

6.7 Installation of discharge pipe

6.7.1 Design of discharge pipe

Danger!
Risk of burns and scalds resulting from escaping hot water!
In the event of a fault, hot water can escape suddenly from the discharge pipe of the expansion relief valve.

- Lay the discharge pipe so that it ends at an easily visible point inside or outside the building where escaping hot water does not pose a risk to persons.

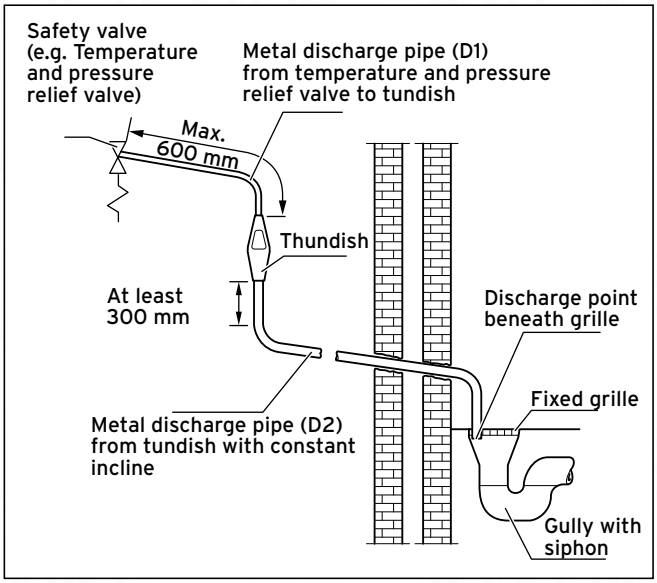

Fig. 6.9 Typical drainage installation

The discharge connections of the temperature and pressure relief valve and the expansion relief valve must be connected to the supplied tundish via 15 mm copper piping. The tundish should be mounted vertically, as close to the cylinder as possible and not more than 600 mm from the connection of the temperature and pressure relief valve. It must be mounted in the same room as the cylinder at a sufficient distance from the electrical components. The discharge pipes from the temperature and pressure relief valve and from the expansion relief valve can be joined above the tundish using a T-piece (→ **fig. 4.1**).
The discharge pipe from the 22 mm connection of the tundish must be laid using copper piping with a diameter of at least 22 mm to a safe and visible discharge point. There must be a vertical section of pipe at least 300 mm long beneath the tundish before any bends or elbows in the pipework. If the total resistance of the discharge pipe exceeds the values specified in Tab. 6.4 below, you must increase the diameter of the piping. When installing the discharge piping, you must observe Directive G3 (→ **section 2.2**).

Minimum diameter of discharge pipe (D2) from tundish	Maximum permissible total resistance, expressed as straight pipe length (without elbows or bends)	Resistance due to each elbow or bend
22 mm	up to 9 m	0.8 m
28 mm	up to 18 m	1.0 m
35 mm	up to 27 m	1.4 m

Tab. 6.4 Sizing of copper discharge pipe "D2" for G1/2 temperature and pressure relief valve outlet size

Worked example
The example below is for a G1/2 temperature relief valve with a discharge pipe (D2) having 4 No. 22 mm elbows and length of 7 m from the tundish to the point of discharge.

From Table 6.4:
Maximum resistance allowed for a straight length of 22 mm copper discharge pipe (D2) from a G1/2 temperature relief valve is: 9.0 m.
Subtract the resistance for 4 No. 22 mm elbows at 0.8 m each = 3.2 m
Therefore the maximum permitted length equates to: 5.8 m, which is less than the actual length of 7 m therefore calculate the next largest size.

Maximum resistance allowed for a straight length of 28 mm pipe (D2) from a G1/2 temperature relief valve is: 18 m.

Subtract the resistance of 4 No. 28 mm elbows at 1.0 m each = 4.0 m.

Therefore the maximum permitted length equates to: 14 m.
As the actual length is 7 m, a 28 mm (D2) copper pipe will be satisfactory.

A suitable place for the end of the discharge pipe is, for example, beneath a fixed grille above the odour seal in a gully with a siphon. Low discharge pipes, for example up to 100 mm above external surfaces such as car and other parking spaces, grasslands, etc. can be used provided that they are secured by a wire fence or something similar to prevent children from coming into contact with the waste water and provided that the system is not visible. You must not install any valves or stop cocks in the discharge pipe.

➤ Make sure that the discharge pipe from the tundish to the drain has a constant downward incline of at least 1:200.

The discharge pipe from the pressure relief valve of the Vaillant gas-fired wall-hung boiler can be connected to the horizontal discharge pipe of the cylinder behind the tundish using a T-piece.

6.7.2 High drain

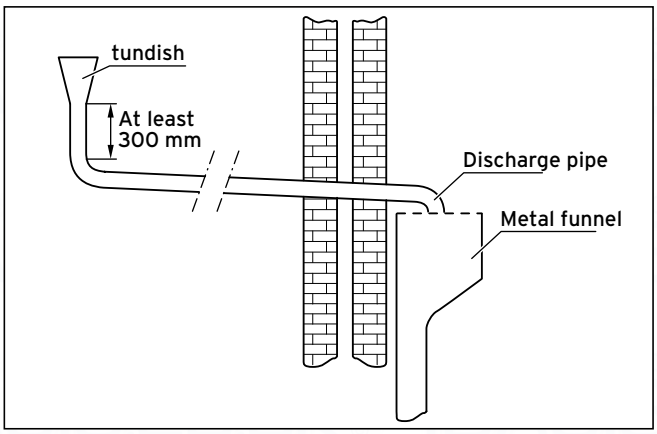

Fig. 6.10 High drain connection

The method illustrated in Fig. 6.10 is allowed provided that no-one inside or outside the building is endangered by the discharge point.

Examples of points to consider when deciding whether a location is suitable for the high drain:

- The possibility (taking into account the effect of the wind) that a person might be located in the area where the water escapes, and, if this is the case, whether the water is sufficiently cooled by that point to pose no danger. Thermal conductivity of the structure's surface, climatic conditions and location and orientation of the discharge pipe may or may not have an effect on reducing the temperature of the discharge water.
- The position of windows and other openings.
- The probability of prams being parked under the drain.
- The resistance of the surface to hot water.
- The possibility of ice forming if the water is discharged onto paths.

6.8 Electrical installation

Danger!
Risk of death from electric shock!
Improperly executed electrical connections can impair the operational safety of the unit.

➤ The electrical installation may only be performed by a competent person approved
at the time by the Health and Safety Executive.

Danger!
Risk of death from electric shock!
Without potential equalisation, life-threatening voltage can reach the piping and water draw-off points.

➤ Earth the heating system.

Wiring should be installed by a qualified competent person in accordance with the building regulations, Part P of the current IEE regulations, and all other applicable regulations and directives.
You can use standard commercial cables (H05RR-F 3G1.5 or H05VV-F 3G1.5) for the wiring:

- Cross-section of conductors: 1.5 mm^2
- Torque for strain relief: 1.5 Nm
- Maximum length of bus cables: 300 m

230 V supply lines and bus cables must be laid separately above lengths of 10 m.

The discharge pipes of the tundish, drain valves and motorised valves, etc. must be laid at a distance from electrical components.

6.8.1 Options for combining control components

➤ For the installation, use the connection wiring diagram specified in Tab. 6.5 for the gas-fired wall-hung boiler and control components used.

Gas-fired wall-hung boiler used
eBUS-compatible gas-fired wall-hung boiler such as the Vaillant ecoTEC or non-eBUS-compatible gas-fired wall-hung boiler from Vaillant or a third-party manufacturer.

Wiring
Wiring via the Vaillant VR 61/2 mixer module or Vaillant Control Centre as a system solution which enables Vaillant dual-channel eBUS controllers (low-voltage) to be used with valves and domestic hot water cylinders in the traditional 230 V range in the English market. Alternatively, using a standard cabling box.

Solar circuit control system
Solar circuit control via one of the following means:
- The auroMATIC 560/2 differential temperature-controlled control set for solar-aided hot water production
- The VRC weather compensator with VR 68/2.

The temperature sensors VR 10 (cylinder sensor) and VR 11 (collector sensor) are supplied with the VRS 560/2 solar controller or VR 68/2 solar module.

Control system of the heating circuits
The heating circuits can be controlled via Vaillant programmable room thermostats or weather compensators in conjunction with the Vaillant range of eBUS-compatible gas-fired wall-hung boilers. You can also use tested standard operating elements (see above).
For an overview of the combination options for these control components, see Tab. 6.5.

All wiring must be carried out in accordance with BS 7671: "Requirements for electrical installations" (IEE wiring regulations, current edition).

For the wiring of the solar pump, solar controller, and solar pump thermal cut-outs on the cylinder (see connection wiring diagrams 1 to 6, **→ section 6.8.6**), an additional terminal strip is required.

Hot water reheating control
Hot water primary heating control via the auroMATIC 560/2 differential temperature-controlled control set for solar-aided hot water production with demand-controlled primary heating for Vaillant gas-fired wall-hung boilers. Alternatively, via a Vaillant dual-circuit eBUS controller or a timer (from a third-party manufacturer).

Gas-fired wall-hung boiler	Wiring via	Solar circuit control system	Control system of the heating circuits	Solar cylinder primary heating control system	Hydraulic plan	Connection wiring diagram
Vaillant ecoTEC, eBUS-compatible	Vaillant Control Centre	VRS 560/2	Vaillant dual-channel eBUS controller	Vaillant dual-channel eBUS controller with Vaillant Control Centre	S plan	1 → Fig. 6.17
Vaillant ecoTEC, eBUS-compatible	Vaillant Control Centre	VRS 560/2	Vaillant dual-channel eBUS controller	Vaillant dual-channel eBUS controller with Vaillant Control Centre	Y plan	2 → Fig. 6.18
Vaillant ecoTEC, eBUS-compatible	Vaillant Control Centre	VRS 560/2	Vaillant dual-channel eBUS controller	VRS 560/2 with Vaillant Control Centre	S plan	3 → Fig. 6.19
Vaillant ecoTEC, eBUS-compatible	Vaillant Control Centre	VRS 560/2	Vaillant dual-channel eBUS controller	VRS 560/2 with Vaillant Control Centre	Y plan	4 → Fig. 6.20
Vaillant ecoTEC, eBUS-compatible	VR 61/2 and VR 68/2	VRC with VR 68/2	Vaillant dual-channel eBUS controller	Vaillant dual-channel eBUS controller and VR 68/2	S plan	5 → Fig. 6.21
Non-eBUS-compatible boiler from a third-party manufacturer	Standard cabling box	VRS 560/2	Programmable timer and room thermostat	VRS 560/2	S or Y plan	6 → Fig. 6.22

Tab. 6.5 Options for combining control components

6.8.2 Electrical connection of control components

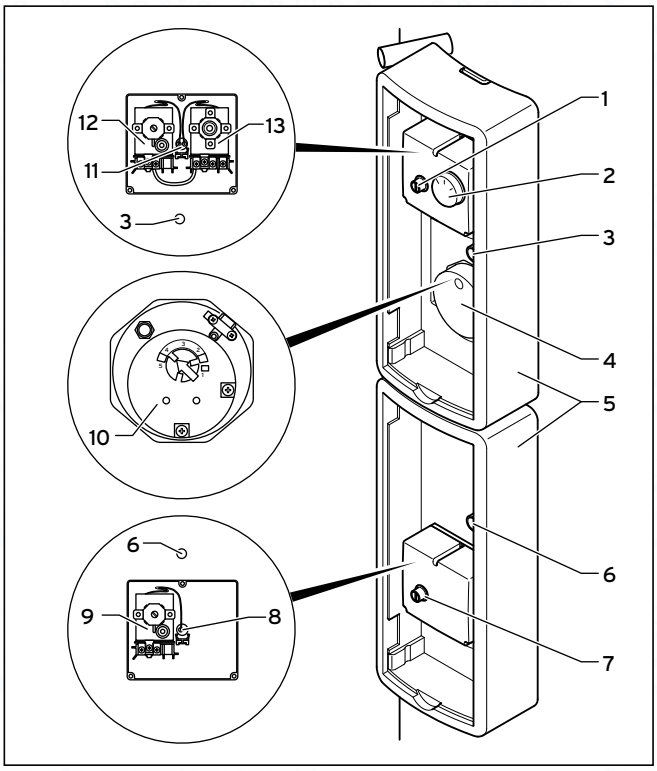

Fig. 6.11 Cylinder temperature control

Key
1 Cover cap for reset button for primary heating circuit TCO
2 Primary heating circuit temperature controller
3 Primary heating circuit cylinder dry pocket (SP 1)
4 Electric immersion heater cover
5 Casing
6 Solar circuit cylinder dry pocket (SP 2)
7 Cover cap for reset button for solar circuit TCO
8 Upper cylinder dry pocket
9 Solar circuit thermal cut-out (TCO)
10 Electric immersion heater
11 Lower cylinder dry pocket
12 Primary heating circuit thermal cut-out
13 Cylinder thermostat

The cylinder has a suitable thermal cut-out for the primary heating circuit (**12**) and solar circuit (**9**) and a cylinder thermostat (**13**).

Before wiring the control components, dismantle the casing (**5**) to facilitate work on the components. When reinstalling the casing, use the cutouts in the casings for routing the cables.

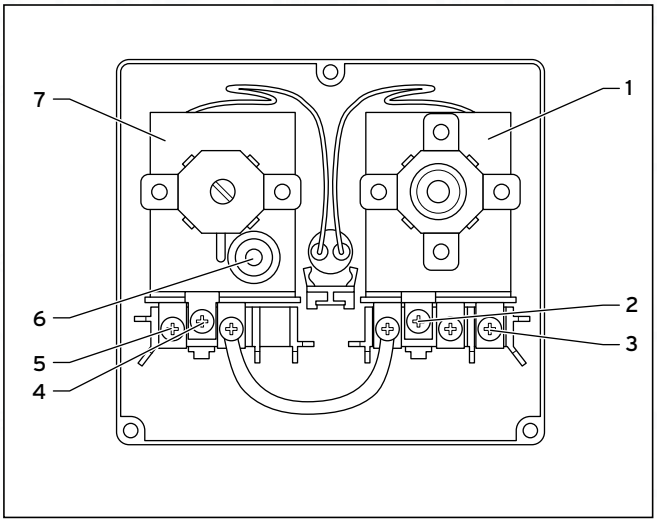

Fig. 6.12 Cylinder thermostat and thermal cut-out (TCO) for primary heating circuit

Key
1 Cylinder thermostat
2 Cylinder thermostat protective earth terminal
3 Cylinder thermostat terminal 1
4 Primary heating circuit TCO protective earth terminal
5 Primary heating circuit TCO C terminal
6 Primary heating circuit TCO reset button
7 Primary heating circuit thermal cut-out (TCO)

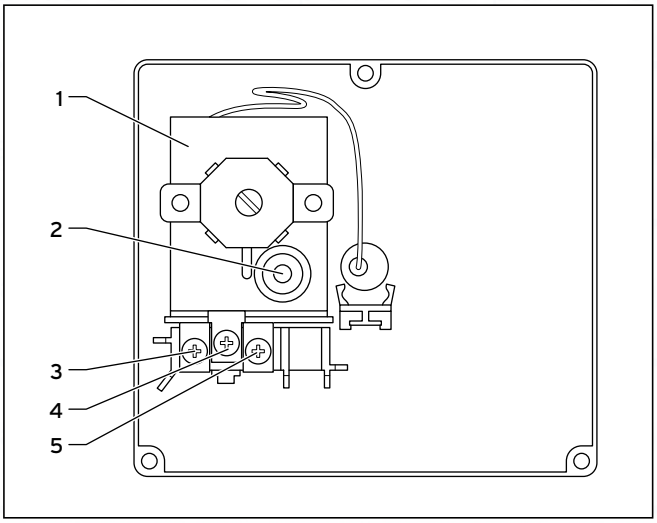

Fig. 6.13 Solar circuit thermal cut-out (TCO)

Key
1 Solar circuit thermal cut-out (TCO)
2 Solar circuit TCO reset button
3 Solar circuit TCO terminal C
4 Solar circuit TCO protective earth terminal
5 Solar circuit TCO terminal 2

You must connect the solar pump's outer conductor from the solar control via terminals "3" and "5" of the TCO solar circuit in series circuit to the solar pump.

6.8.3 Connecting up the electric immersion heater

The Vaillant auroSTOR VIH S GB 210/2 S, VIH S GB 260/2 S, and VIH S GB 310/2 S solar cylinders are fitted with an electric immersion heater at the factory.

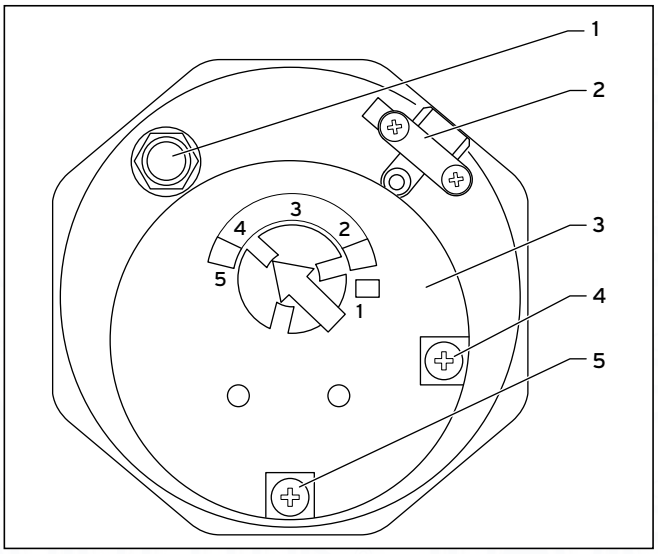

Fig. 6.14 Electrical connection of electric immersion heater

Key
1 Protective earth terminal (PE)
2 Cable grip
3 Electric immersion heater
4 Neutral conductor terminal (N)
5 Outer conductor terminal (L)

Danger!
Risk of death from electric shock!
Without potential equalisation, life-threatening voltage can reach the piping and water draw-off points.
➤ Earth the electric immersion heater.

➤ Remove the front cladding of the casing (**5 → fig. 6.11**) from the cylinder.
➤ Dismantle the casing to facilitate work on the components.
➤ Dismantle the electric immersion heater cover.
➤ Install a separate electrical power supply for the electric immersion heater in accordance with current IEE regulations (BS 7671).
- Use heat-resistant cables (H05BN4-F 1.5 mm^2, 3-wire HOFR-coated) for the cabling of the electric immersion heater.
- Use the cable grip (**2**) to firmly secure the supply cable of the immersion heater.
- Connect the electric immersion heater to the power mains via a double pole isolating switch with a contact separation of at least 3 mm in both poles.
- Protect the circuit using a 16 A fuse.

Caution!
Corrosion and short circuits may occur due to incorrect earthing.
If you insert a electric immersion heater into the cylinder, the external voltage may build up electrical potential in the water which may result in the electrochemical corrosion of the electric immersion heater.
➤ Ensure that both the hot water and cold water pipes are connected to the earth line by means of an earth cable directly on the cylinder.
➤ You must also make sure that the electric immersion heater is connected to the earth line via the earthing terminal.

➤ Mount the cover for the electric immersion heater.

Only switch the immersion heater on once the cylinder is completely full.

With the isolating switch, the electric immersion heater can be switched on if the primary heating device has malfunctioned.

6.8.4 Connection of the solar pump

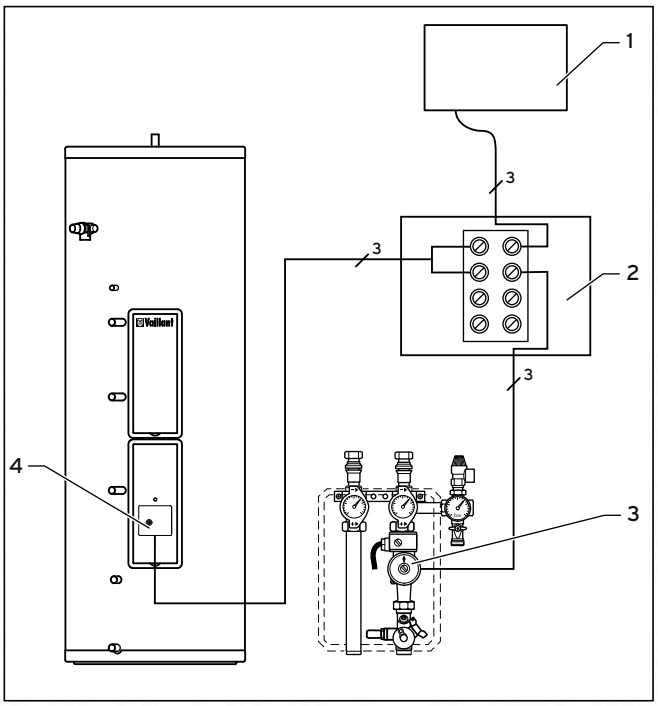

Fig. 6.15 Connection diagram for solar pump

Key
1 VRS 560/2 or VR 68/2
2 Terminal strip for series circuit to solar pump via TCO solar circuit
3 Solar pump
4 Solar circuit thermal cut-out (TCO)

Connection wiring diagrams 1, 2, 3, 4, and 6:
➤ Next to the cylinder, install the VRS 560/2 solar controller (**1**).

Connection wiring diagram 5:
➤ Next to the cylinder, install the VR 68/2 solar module (**1**).

➤ Dismantle the cover of the VRS 560/2 solar controller or the VR 68/2 solar module.
➤ Dismantle the cover of the solar circuit thermal cut-out (**4**).
➤ Connect the solar pump (**3**) in series with the provided solar circuit thermal cut-out. To do so, use a protected terminal strip (**2**) and 3-core cable provided by the customer.

The solar pump and solar circuit thermal cut-out must be earthed using a protective earth.
➤ You must carry out a protective earth test.

Connection wiring diagrams 1, 2, 3, 4, and 6 (VRS 560/2):
➤ Connect the terminal strip with the terminal **Kol 1-P** of the VRS 560/2 (**1**).

Connection wiring diagram 5 (VR 68/2):
➤ Connect the terminal strip with the terminal **Kol 1-P** of the VR 68/2 (**1**).

6.8.5 Connecting up the solar yield temperature sensor

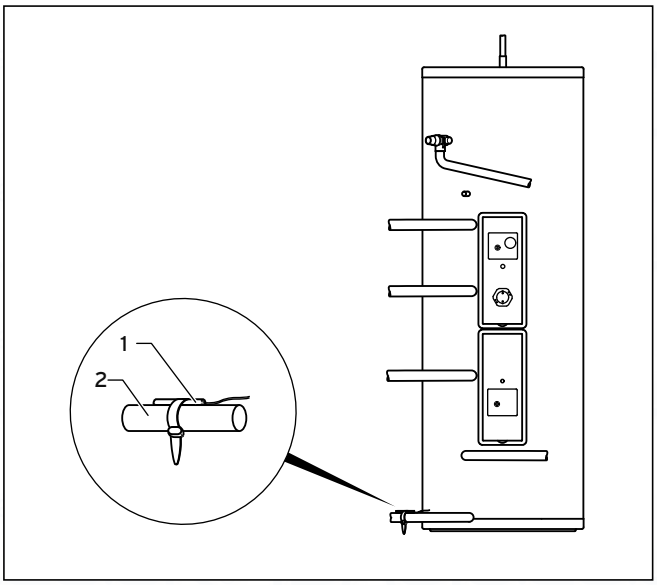

Fig. 6.16 Solar yield temperature sensor

Key
1 Solar yield temperature sensor
2 Solar return

➤ Mount the solar yield temperature sensor (**1**) on the return line (**2**) of the solar circuit.

Connection wiring diagrams 1, 2, 3, 4, and 6 (VRS 560/2):
➤ Connect the solar yield temperature sensor to the yield (**"Ertrag"**) terminal of the VRS 560/2 solar controller.

Connection wiring diagram 5 (VR 68/2):
➤ Connect the solar yield temperature sensor to the yield (**"Ertrag"**) terminal of the VR 68/2 solar module.

spares & parts online IBASIS.CO.UK

6.8.6 Installing the control components in accordance with the connection wiring diagrams

Connection wiring diagram 1 (S plan hydraulics)

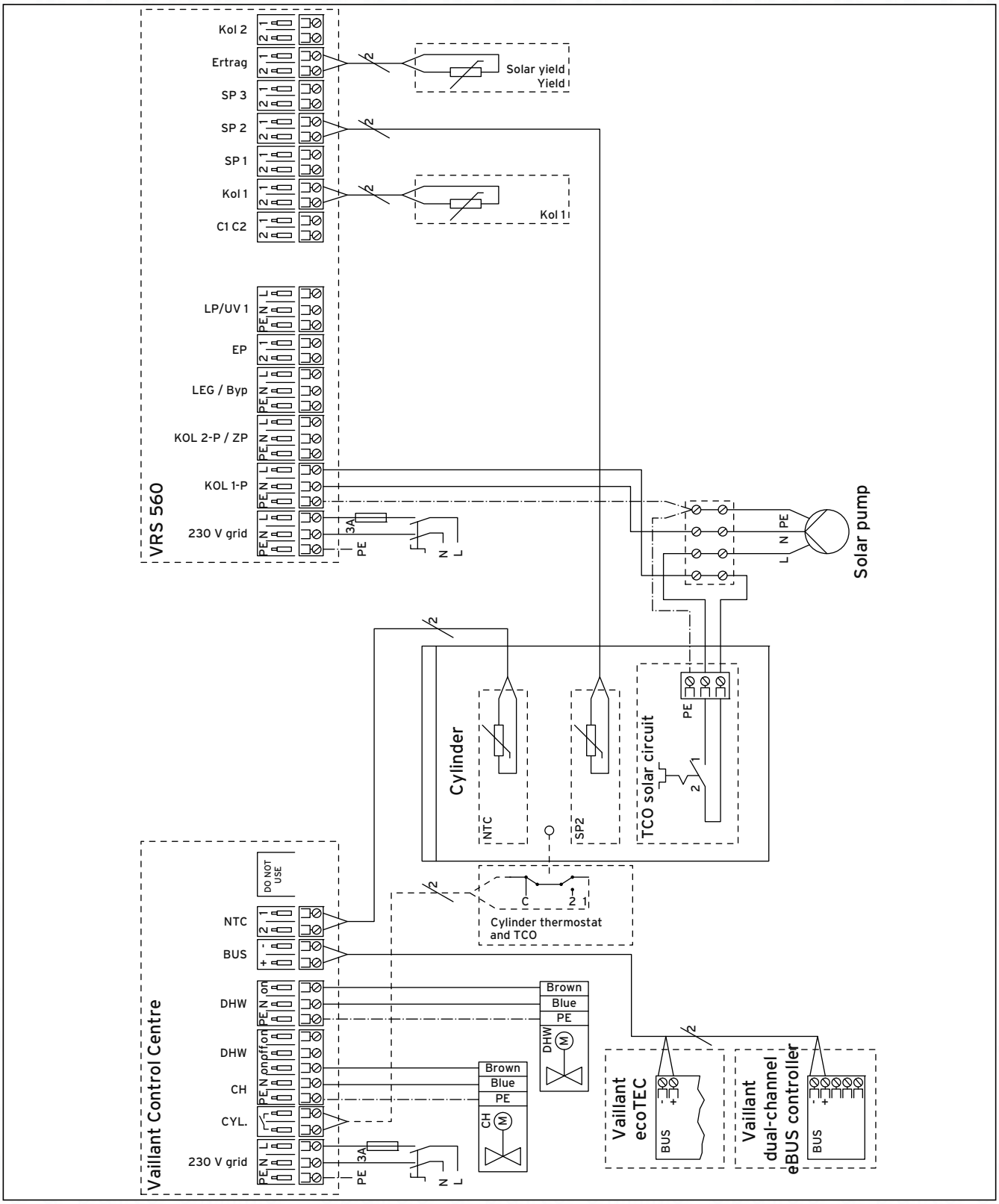

Fig. 6.17 Connection wiring diagram 1

- eBUS-compatible Vaillant gas-fired wall-hung boiler
- Wiring via Vaillant Control Centre
- Solar circuit control via VRS 560/2 solar controller
- Primary heating circuit control via Vaillant dual-channel eBUS controller
- Room heating control via Vaillant dual-channel eBUS controller
- S plan hydraulics

➤ Next to the solar cylinder, install the Vaillant Control Centre.
➤ Dismantle the cover of the Vaillant Control Centre.

➤ Insert a VR 10 temperature sensor into the bottom cylinder dry pocket for SP2 (**6 → fig. 6.11**).
➤ Connect this lower cylinder sensor (SP 2) to the terminal **SP 2** of the VRS 560/2.
➤ Mount the VR 11 collector sensor (Kol 1) in the provided sensor sleeve on the collector array.
➤ Connect the VR 11 collector sensor to the terminal **Kol 1** of the VRS 560/2.

The terminals **NTC** and CYL. of the Vaillant Control Centre may not be connected at the same time.

Option 1: Upper cylinder sensor (NTC) to Vaillant Control Centre:
➤ Insert a VR 10 temperature sensor into the cylinder dry pocket for SP1 (**3 → fig. 6.11**).
➤ Connect the upper cylinder sensor (NTC) to the terminal **NTC** of the Vaillant Control Centre.

Option 2: Cylinder thermostat to Vaillant Control Centre:
➤ Dismantle the cover of the cylinder thermostat (**13 → fig. 6.11**).
➤ Connect the terminals **1** (cylinder thermostat) (**3 → fig. 6.12**) and **C** (primary heating circuit TCO) (**5 → fig. 6.12**) to the terminal **CYL.** of the Vaillant Control Centre.
➤ Mount the cover for the cylinder thermostat.
➤ Mount the casing (**5 → fig. 6.11**) on the cylinder and use the cutouts in the casings for routing the cables.
➤ Mount the front claddings of the casing.

The electrical installation of the eBUS connection is described in the installation instructions for the Vaillant dual-channel eBUS controller.
➤ Install the eBUS connection from the gas-fired wall-hung boiler to the Vaillant Control Centre.
➤ Install the eBUS connection from the gas-fired wall-hung boiler to the Vaillant dual-channel eBUS controller.
➤ Connect the zone valves for the heating circuit and hot water circuit in accordance with connection diagram 1 (S plan hydraulics).

➤ Connect the gas-fired wall-hung boiler, Vaillant Control Centre, and VRS 560/2 to the power mains.
➤ Mount the covers for the Vaillant Control Centre and the VRS 560/2.
➤ Adjust the Vaillant dual-channel eBUS controller and the VRS 560/2 solar controller in accordance with their operating and installation instructions.
➤ Set the maximum cylinder temperature (MAXT 1) to 75 °C (factory setting) on the auroMATIC VRS 560/2 solar controller (see operating instructions for the VRS 560/2).

Connection wiring diagram 2 (Y plan hydraulics only with an eBUS-compatible Vaillant wall-hung boiler.)

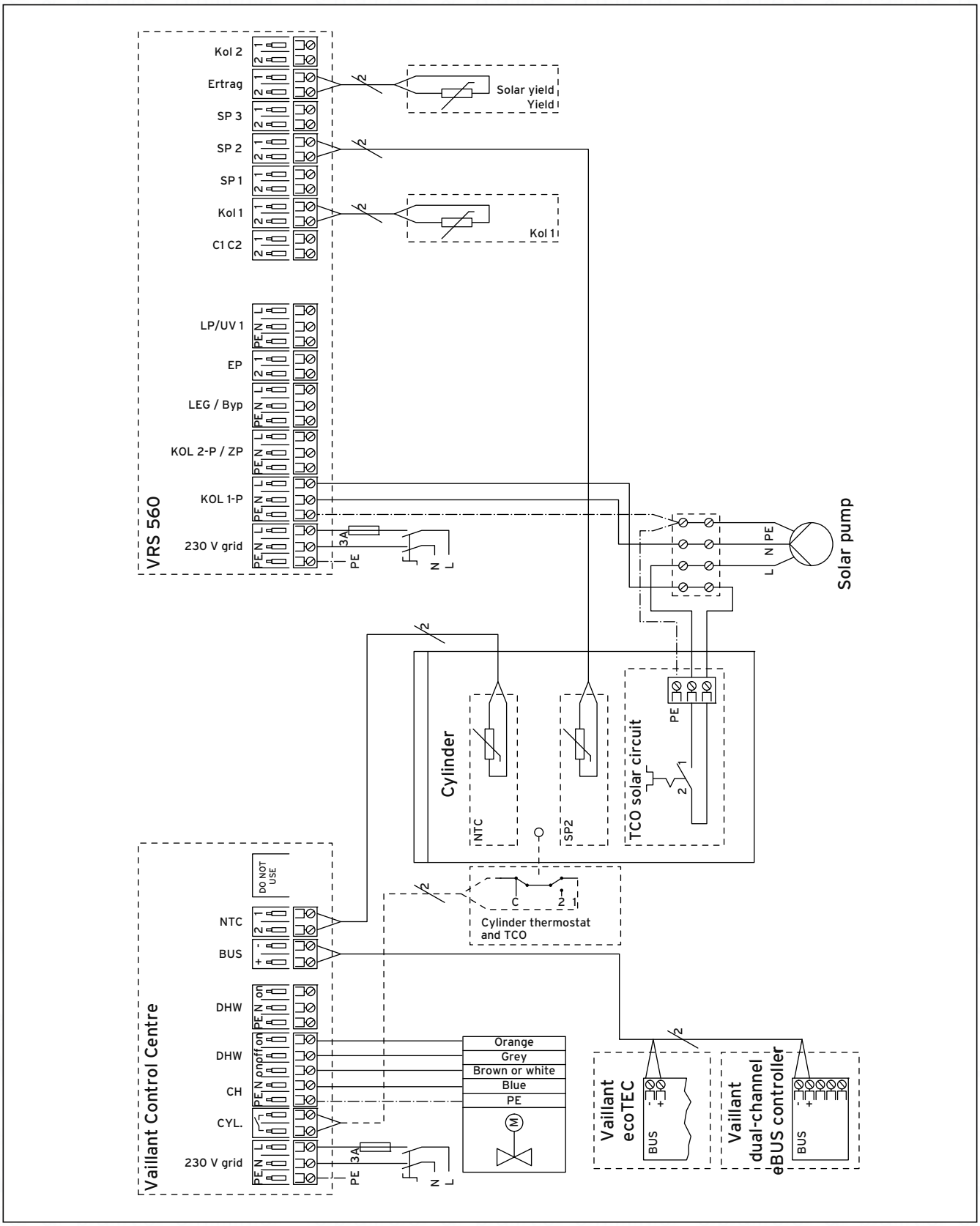

Fig. 6.18 Connection wiring diagram 2

- eBUS-compatible Vaillant gas-fired wall-hung boiler
- Wiring via Vaillant Control Centre
- Solar circuit control via VRS 560/2 solar controller
- Primary heating circuit control via Vaillant dual-channel eBUS controller
- Room heating control via Vaillant dual-channel eBUS controller
- Y plan hydraulics

➤ Next to the solar cylinder, install the Vaillant Control Centre.
➤ Dismantle the cover of the Vaillant Control Centre.

➤ Insert a VR 10 temperature sensor into the bottom cylinder dry pocket for SP2 (**6 → fig. 6.11**).
➤ Connect this lower cylinder sensor (SP 2) to the terminal **SP 2** of the VRS 560/2.
➤ Mount the VR 11 collector sensor (Kol 1) in the provided sensor sleeve on the collector array.
➤ Connect the VR 11 collector sensor to the terminal **Kol 1** of the VRS 560/2.

The terminals **NTC** and CYL. of the Vaillant Control Centre may not be connected at the same time.

Option 1: Upper cylinder sensor (NTC) to Vaillant Control Centre:
➤ Insert a VR 10 temperature sensor into the cylinder dry pocket for SP1 (**3 → fig. 6.11**).
➤ Connect the upper cylinder sensor (NTC) to the terminal **NTC** of the Vaillant Control Centre.

Option 2: Cylinder thermostat to Vaillant Control Centre:
➤ Dismantle the cover of the cylinder thermostat (**13 → fig. 6.11**).

➤ Connect the terminals **1** (cylinder thermostat) (**3 → fig. 6.12**) and **C** (primary heating circuit TCO) (**5 → fig. 6.12**) to the terminal **CYL.** of the Vaillant Control Centre.
➤ Mount the cover for the cylinder thermostat.
➤ Mount the casing (**5 → fig. 6.11**) on the cylinder and use the cutouts in the casings for routing the cables.
➤ Mount the front claddings of the casing.

The electrical installation of the eBUS connection is described in the installation instructions for the Vaillant dual-channel eBUS controller.
➤ Install the eBUS connection from the gas-fired wall-hung boiler to the Vaillant Control Centre.
➤ Install the eBUS connection from the gas-fired wall-hung boiler to the Vaillant dual-channel eBUS controller.
➤ Connect the 3-way valve for the heating circuit and hot water circuit in accordance with connection diagram 2 (Y plan hydraulics).

➤ Connect the gas-fired wall-hung boiler, Vaillant Control Centre, and VRS 560/2 to the power mains.
➤ Mount the covers for the Vaillant Control Centre and the VRS 560/2.
➤ Adjust the Vaillant dual-channel eBUS controller and the VRS 560/2 solar controller in accordance with their operating and installation instructions.
➤ Set the maximum cylinder temperature (MAXT 1) to 75 °C (factory setting) on the auroMATIC VRS 560/2 solar controller (see operating instructions for the VRS 560/2).

Connection wiring diagram 3 (S plan hydraulics)

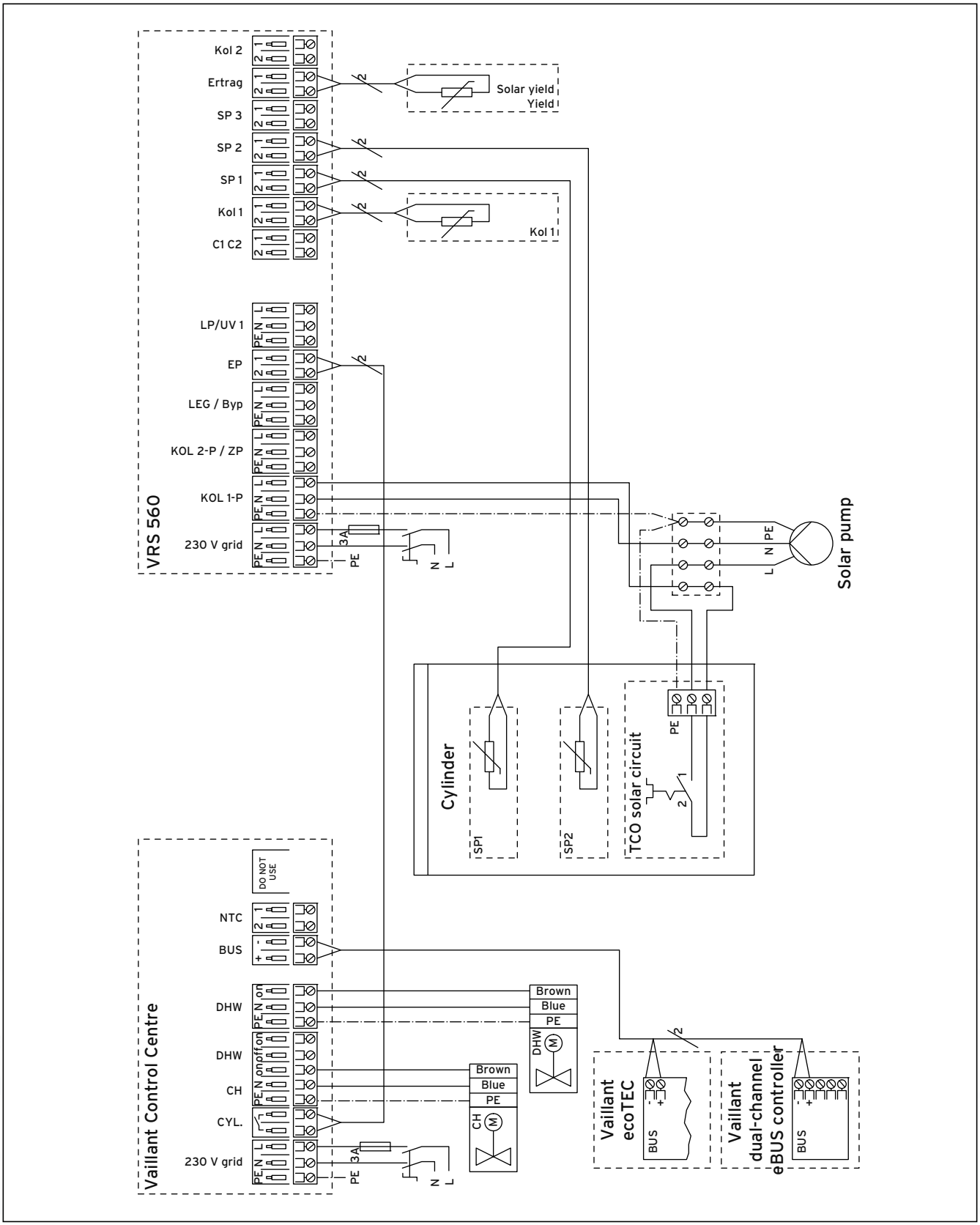

Fig. 6.19 Connection wiring diagram 3

- eBUS-compatible Vaillant gas-fired wall-hung boiler
- Wiring via Vaillant Control Centre
- Solar circuit control via VRS 560/2 solar controller
- Primary heating circuit control via VRS 560/2 solar controller
- Room heating control via Vaillant dual-channel eBUS controller
- S plan hydraulics

➤ Next to the solar cylinder, install the Vaillant Control Centre.
➤ Dismantle the cover of the Vaillant Control Centre.

➤ Insert a VR 10 temperature sensor into the cylinder dry pocket for SP2 (**6 → fig. 6.11**).
➤ Connect this lower cylinder sensor (SP 2) to the terminal **SP 2** of the VRS 560/2.
➤ Insert a VR 10 temperature sensor into the bottom cylinder dry pocket for SP1 (**3 → fig. 6.11**).
➤ Connect this upper cylinder sensor (SP 1) to the terminal **SP 1** of the VRS 560/2.
➤ Mount the VR 11 collector sensor (Kol 1) in the provided sensor sleeve on the collector array.
➤ Connect the VR 11 collector sensor (Kol 1) to the terminal **Kol 1** of the VRS 560/2.
➤ Connect the terminal **EP** of the VRS 560/2 with the terminal **CYL.** of the Vaillant Control Centre.

The terminals **NTC** and CYL. of the Vaillant Control Centre may not be connected at the same time.

➤ Mount the casing (**5 → fig. 6.11**) on the cylinder and use the cutouts in the casings for routing the cables.
➤ Mount the front claddings of the casing.

The electrical installation of the eBUS connection is described in the installation instructions for the Vaillant dual-channel eBUS controller.

➤ Install the eBUS connection from the gas-fired wall-hung boiler to the Vaillant Control Centre.
➤ Install the eBUS connection from the gas-fired wall-hung boiler to the Vaillant dual-channel eBUS controller.
➤ Connect the zone valves for the heating circuit and hot water circuit in accordance with connection diagram 3 (S plan hydraulics).

➤ Connect the gas-fired wall-hung boiler, Vaillant Control Centre, and VRS 560/2 to the power mains.
➤ Mount the covers for the Vaillant Control Centre and the VRS 560/2.
➤ Adjust the Vaillant dual-channel eBUS controller and the VRS 560/2 solar controller in accordance with their operating and installation instructions.
➤ Set the maximum cylinder temperature (MAXT 1) to 75 °C (factory setting) on the auroMATIC VRS 560/2 solar controller (see operating instructions for the VRS 560/2).

Connection wiring diagram 4 (Y plan hydraulics)

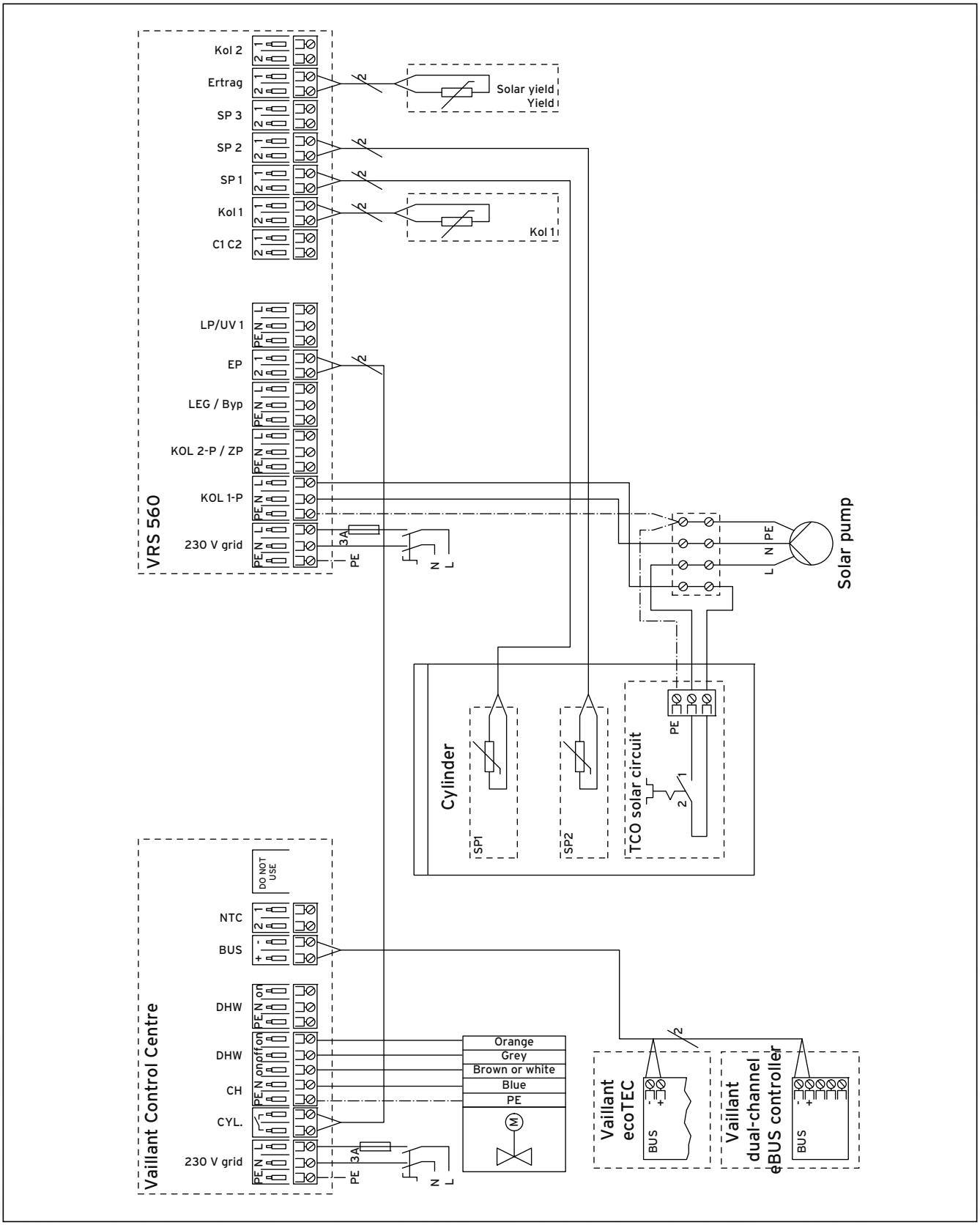

Fig. 6.20 Connection wiring diagram 4

- eBUS-compatible Vaillant gas-fired wall-hung boiler
- Wiring via Vaillant Control Centre
- Solar circuit control via VRS 560/2 solar controller
- Primary heating circuit control via VRS 560/2 solar controller
- Room heating control via Vaillant dual-channel eBUS controller
- Y plan hydraulics

➤ Next to the solar cylinder, install the Vaillant Control Centre.
➤ Dismantle the cover of the Vaillant Control Centre.

➤ Insert a VR 10 temperature sensor into the cylinder dry pocket for SP2 (**6 → fig. 6.11**).
➤ Connect this lower cylinder sensor (SP 2) to the terminal **SP 2** of the VRS 560/2.
➤ Insert a VR 10 temperature sensor into the bottom cylinder dry pocket for SP1 (**3 → fig. 6.11**).
➤ Connect this upper cylinder sensor (SP 1) to the terminal **SP 1** of the VRS 560/2.
➤ Mount the VR 11 collector sensor (Kol 1) in the provided sensor sleeve on the collector array.
➤ Connect the VR 11 collector sensor (Kol 1) to the terminal **Kol 1** of the VRS 560/2.
➤ Connect the terminal **EP** of the VRS 560/2 with the terminal **CYL.** of the Vaillant Control Centre.

The terminals **NTC** and CYL. of the Vaillant Control Centre may not be connected at the same time.

➤ Mount the casing (**5 → fig. 6.11**) on the cylinder and use the cutouts in the casings for routing the cables.
➤ Mount the front claddings of the casing.

The electrical installation of the eBUS connection is described in the installation instructions for the Vaillant dual-channel eBUS controller.

➤ Install the eBUS connection from the gas-fired wall-hung boiler to the Vaillant Control Centre.
➤ Install the eBUS connection from the gas-fired wall-hung boiler to the Vaillant dual-channel eBUS controller.
➤ Connect the 3-way valve for the heating circuit and hot water circuit in accordance with connection diagram 4 (Y plan hydraulics).

➤ Connect the gas-fired wall-hung boiler, Vaillant Control Centre, and VRS 560/2 to the power mains.
➤ Mount the covers for the Vaillant Control Centre and the VRS 560/2.
➤ Adjust the Vaillant dual-channel eBUS controller and the VRS 560/2 solar controller in accordance with their operating and installation instructions.
➤ Set the maximum cylinder temperature (MAXT 1) to 75 °C (factory setting) on the auroMATIC VRS 560/2 solar controller (see operating instructions for the VRS 560/2).

Connection wiring diagram 5 (S plan hydraulics)

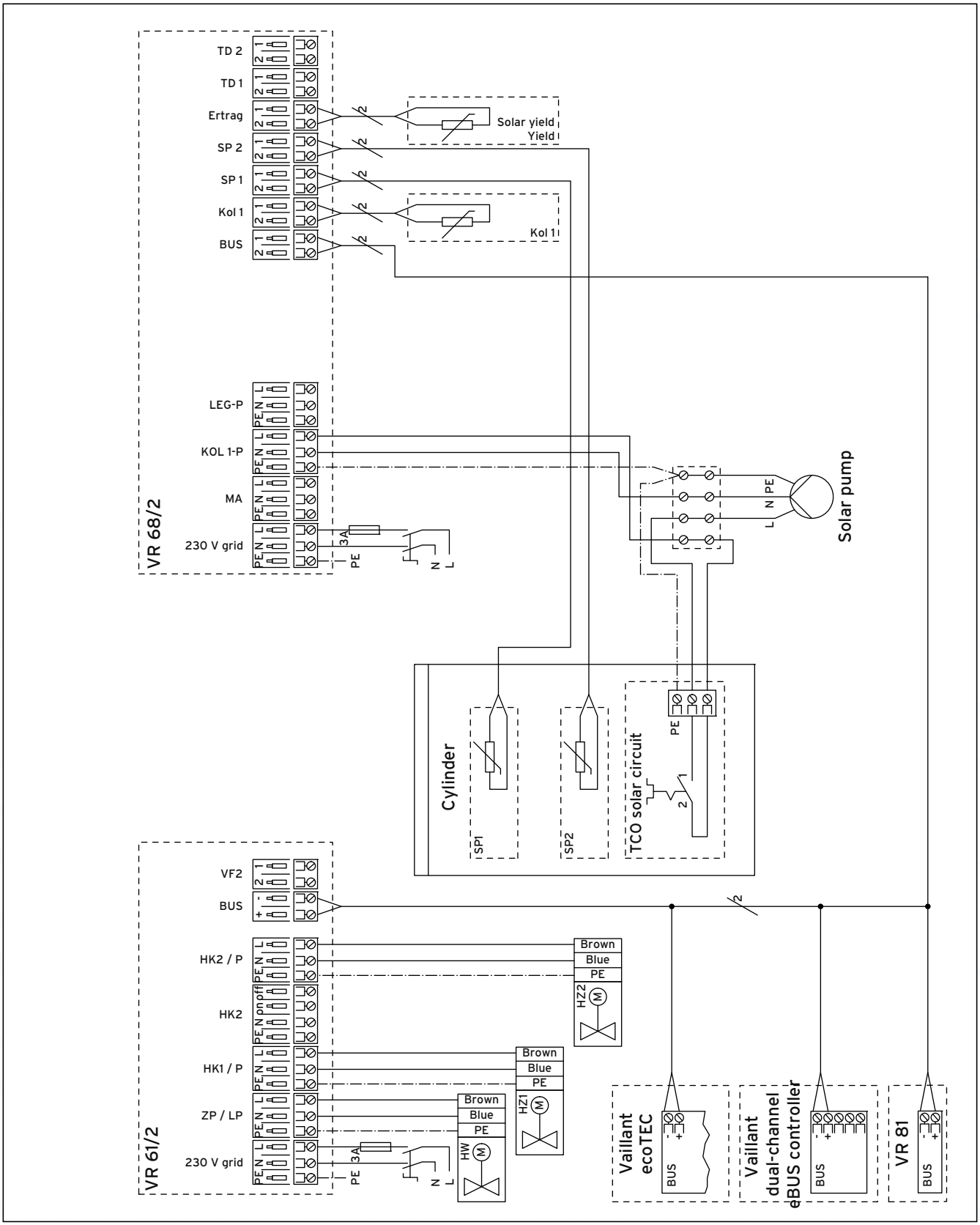

Fig. 6.21 Connection wiring diagram 5

- eBUS-compatible Vaillant gas-fired wall-hung boiler
- Wiring via VR 68/2 solar module and VR 61/2 mixer module
- Control of the solar circuit via a VRC weather compensator and the VR 68/2 solar module
- Control of the primary heating circuit via a VRC controller
- Control of the room heating via a VRC controller
- S plan hydraulics with VR 81 for 2nd zone

➤ Next to the solar cylinder, install the VR 61/2 mixer module.
➤ Install a VRC weather compensator next to the solar cylinder.
➤ Dismantle the covers of the VR 61/2 and the VRC controller.

➤ Insert a VR 10 temperature sensor into the cylinder dry pocket for SP2 (**6 → fig. 6.11**).
➤ Connect this lower cylinder sensor (SP 2) to the terminal **SP 2** of the VR 68/2.
➤ Insert a VR 10 temperature sensor into the bottom cylinder dry pocket for SP1 (**3 → fig. 6.11**).
➤ Connect this upper cylinder sensor (SP 1) to the terminal **SP 1** of the VR 68/2.
➤ Mount the VR 11 collector sensor (Kol 1) in the provided sensor sleeve on the collector array.
➤ Connect the VR 11 collector sensor (Kol 1) to the terminal **Kol 1** of the VR 68/2.

➤ Mount the casing (**5 → fig. 6.11**) on the cylinder and use the cutouts in the casings for routing the cables.
➤ Mount the front claddings of the casing.

The electrical installation of the eBUS connection is described in the installation instructions for the Vaillant dual-channel eBUS controller.

➤ Install the eBUS connection from the gas-fired wall-hung boiler to the VR 61/2.
➤ Install the eBUS connection from the gas-fired wall-hung boiler to the VR 68/2.
➤ Install the eBUS connection from the gas-fired wall-hung boiler to the VRC controller.
➤ Optional: Install the eBUS connection from the gas-fired wall-hung boiler to the VR 81.
➤ Connect the zone valves for the heating circuit and hot water circuit in accordance with connection diagram 5 (S plan hydraulics).

➤ Connect the gas-fired wall-hung boiler, VR 61/2, and VR 68/2 to the power mains.
➤ Mount the covers of the VR 61/2, the VR 68/2 and the VRC controller.
➤ Adjust the Vaillant dual-channel eBUS controller in accordance with its operating and installation instructions.
➤ Set the maximum cylinder temperature (MAXT 1) to 75 °C (factory setting) on the VRC weather compensator (see operating instructions for the VR 68/2).

Connection wiring diagram 6 (S plan or Y plan hydraulics)

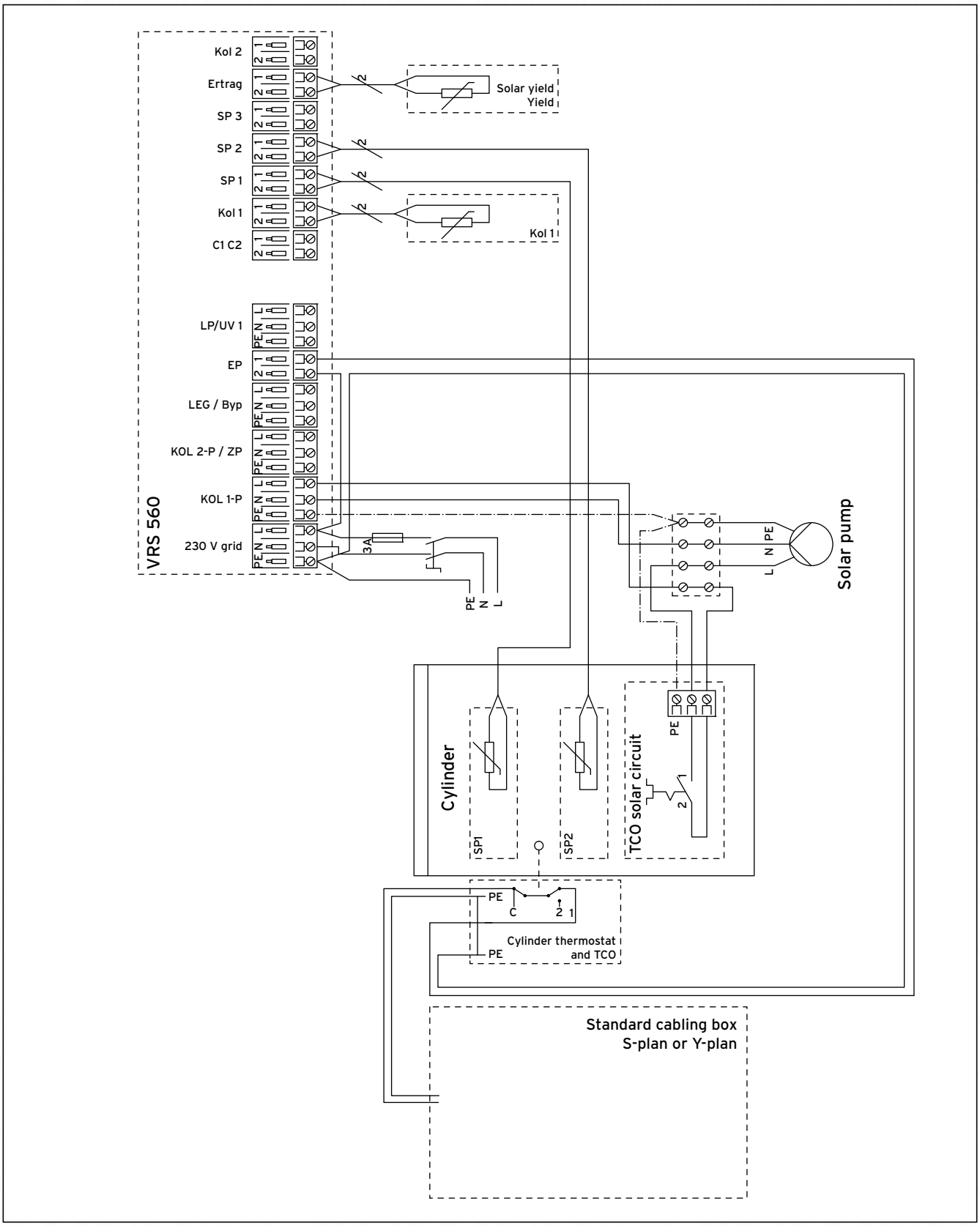

Fig. 6.22 Connection wiring diagram 6

- Third-party boiler, non-eBUS-compatible
- Wiring via standard cabling box
- Solar circuit control via VRS 560/2 solar controller
- Primary heating circuit control via VRS 560/2 solar controller
- Room heating control via programmable timer and room thermostat
- S or Y plan hydraulics

➤ Next to the solar cylinder, install a standard cabling box.
➤ Dismantle the cover for the standard cabling box.
➤ Dismantle the cover of the cylinder thermostat (**13 → fig. 6.11**).

➤ Insert a VR 10 temperature sensor into the cylinder dry pocket for SP2 (**6 → fig. 6.11**).
➤ Connect this lower cylinder sensor (SP 2) to the terminal **SP 2** of the VRS 560/2.
➤ Insert a VR 10 temperature sensor into the cylinder dry pocket for SP1 (**3 → fig. 6.11**).
➤ Connect this upper cylinder sensor (SP 1) to the terminal **SP 1** of the VRS 560/2.
➤ Mount the VR 11 collector sensor (Kol 1) in the provided sensor sleeve on the collector array.
➤ Connect the VR 11 collector sensor (Kol 1) to the terminal **Kol 1** of the VRS 560/2.

For S plan hydraulics:
➤ Install standard S plan wiring between the boiler, two port valves, terminal **C** of the cylinder thermostat, and the standard cabling box.
For Y plan hydraulics:
➤ Install standard Y plan wiring between the boiler, 3-way zone valve, terminal **C** of the cylinder thermostat, and the standard cabling box.

➤ In the VRS 560/2 solar controller, install a bridge from terminal **230V~**, connection **L** to terminal **EP**, connection **2**.
Connect the VRS 560/2 and the cylinder thermostat using a 2-core cable (phase conductor and protective earth):
➤ Connect the connection **1** of the terminal **EP** of the VRS 560/2 with the terminal **1** (**3 → fig. 6.12**) of the cylinder thermostat.
➤ Connect the protective earth connection of the VRS 560 with the protective earth terminal (**2 → fig. 6.12**) of the cylinder thermostat.

Connect the standard cabling box with the thermal cut-out (TCO) for the primary heating circuit using a 2-core cable (phase conductor and protective earth):
➤ Connect the standard cabling box with the terminal **C** (**5 → fig. 6.12**) of the primary heating circuit TCO.
➤ Connect the protective earth connection of the standard cabling box with the protective earth terminal (**4 → fig. 6.12**) of the primary heating circuit TCO.

➤ Install a bridge between the protective earth terminal (**2 → fig. 6.12**) of the cylinder thermostat and the protective earth terminal (**4 → fig. 6.12**) of the primary heating circuit TCO.
➤ Mount the cover for the cylinder thermostat.
➤ Mount the casing (**5 → fig. 6.11**) on the cylinder and use the cutouts in the casings for routing the cables.
➤ Mount the front claddings of the casing.

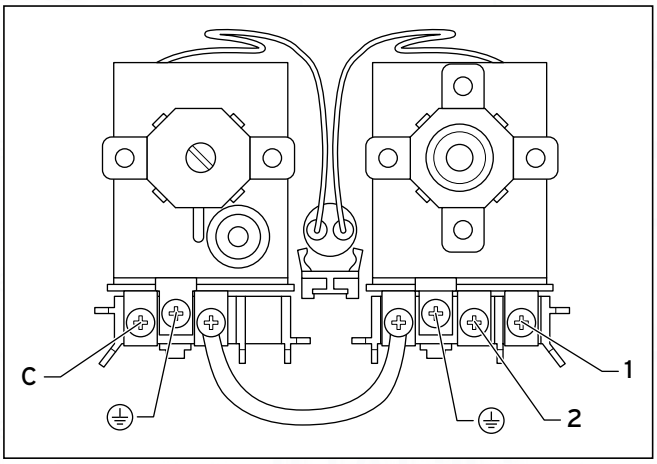

Fig. 6.23 Connections of the cylinder thermostat and the thermal cut-out

➤ Connect the boiler, VRS 560/2, and standard cabling box to the power mains.
➤ Mount the covers for the VRS 560/2 and the standard cabling box.
➤ Adjust the Vaillant VRS 560/2 solar controller in accordance with its operating and installation instructions.
➤ Set the maximum cylinder temperature (MAXT 1) to 75 °C (factory setting) on the auroMATIC VRS 560/2 solar controller (see operating instructions for the VRS 560/2).

The switching signal for the primary heating of the hot water is forwarded to the S plan/Y plan wiring via terminal **EP** of the VRS 560/2, the cylinder thermostat, and the primary heating circuit TCO.

7 Commissioning

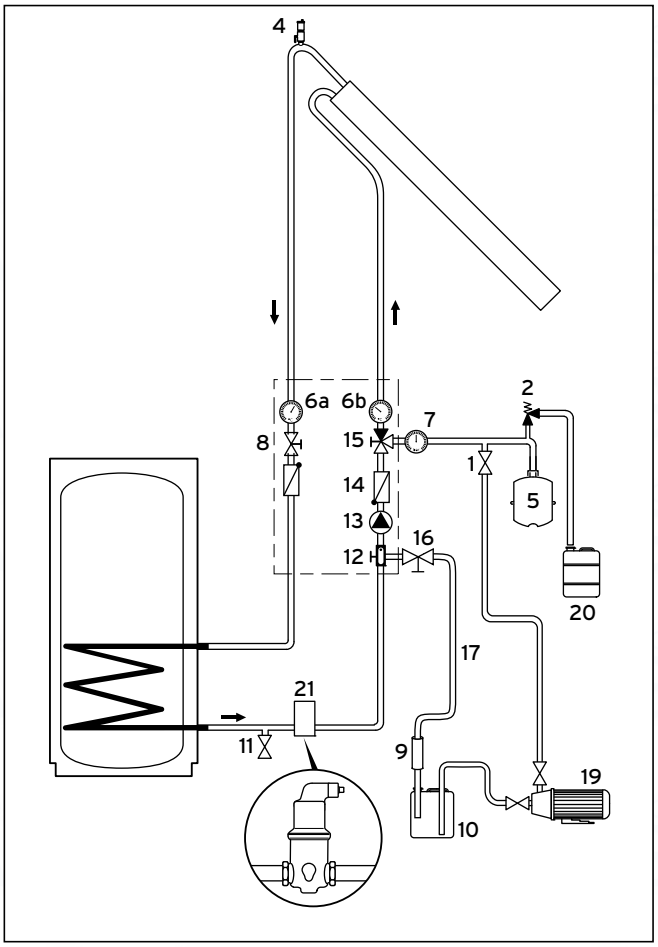

Fig. 7.1 Checking, flushing, and filling the solar circuit

Key
1 Combined filling and draining tap
2 6 bar expansion relief valve
4 Air vent
5 Solar protection vessel
6a Flow line thermometer
6b Return line thermometer
7 Pressure gauge
8 Flow line ball valve with non-return valve
9 Filter
10 Solar fluid container
11 Combined filling and draining tap
12 Flow rate limiter
13 Solar pump
14 Return line non-return valve
15 3-way ball valve with non-return valve
16 Combined filling and draining tap
17 Return hose
19 Filling pump
21 Vaillant automatic air separator system

You must adhere to the following procedure for the commissioning of the total system:
- Check for leak-tightness.
- Flush the solar circuit with solar fluid.
- Fill the solar circuit with solar fluid.
- Set the solar pump.
- Set the flow rate limiter.
- Check the controller.
- Set the hot water thermostat mixer.

Only use Vaillant solar fluid for pressure tests, flushing, and filling.

7.1 Checking leak-tightness

For the pressure test, first fill the solar circuit with Vaillant solar fluid (ready mixed).
A self-priming filling pump with a pressure of 2 to 3 bar is required to fill the solar circuit.
- Connect the pressure hose of the filling pump (**19**) to the upper combined filling and draining tap (**1**) of the solar circuit.
- Connect the return hose (**17**) to the lower combined filling and draining tap (**16**) of the solar circuit.
- Close the 3-way ball valve (**15**).
- Open the air vent (**4**).
- Switch the filling pump on.

The solar fluid now flows into the solar circuit.
- Place enough solar fluid into the container (**10**) to ensure that the filling pump cannot run dry.
- Allow the system to pump the solar fluid (ready mixed) out of the container (**10**) via the combined filling and draining tap (**1**) until solar fluid runs back out of the return hose (**17**) and into the container (**10**).
- Close the combined filling and draining tap (**16**).
- Let the pressure build to around 4.5 bar.
- Close the combined filling and draining tap (**1**) and immediately switch the filling pump off.
- Carry out a visual inspection of the pipes and connections.
- Rectify any leaks and then check again.

Only flush the solar circuit following a successful pressure test.

7.2 Flushing the solar circuit with solar fluid

Flushing is performed from the solar pump unit to the cylinder via the collector.

- Connect the pressure hose of the filling pump (**19**) to the upper combined filling and draining tap (**1**) of the solar circuit.
- Connect the return hose (**17**) to the lower combined filling and draining tap (**16**) of the solar circuit.
- Close the 3-way ball valve (**15**).
- Open the air vent (**4**).
- Switch the filling pump on.
- Place enough solar fluid into the container (**10**) to ensure that the filling pump cannot run dry.
- Allow the system to pump the solar fluid out of the container via the combined filling and draining tap (**1**) until solar fluid runs back out of the return hose (**17**) and into the container (**10**).
- Allow the solar fluid to circulate in the circuit for at least 15 minutes to flush the solar circuit and filter the solar fluid.

7.3 Filling the solar circuit with solar fluid

- First, carry out a pressure test and flush the system with Vaillant solar fluid (ready mixed).
- Connect the pressure hose of the filling pump (**19**) to the upper combined filling and draining tap (**1**) of the solar circuit.
- Connect the return hose (**17**) to the lower combined filling and draining tap (**16**) of the solar circuit.
- Completely open the combined filling and draining taps (**1**) and (**16**) on the solar pump unit to ensure a maximum flow rate.
- Open the ball valve (**8**) on the solar pump unit.
- Close the 3-way ball valve (**15**) on the solar pump unit.
- Switch the filling pump on.
- Place enough solar fluid into the container (**10**) to ensure that the filling pump cannot run dry.
- Check to see whether the solar fluid is running out of the return hose (**17**) and back into the container (**10**).
- Allow the filling pump to run for at least 15 minutes to sufficiently vent the solar circuit.

The vent operation was successful if the fluid in the solar fluid container is clear and no more bubbles rise to the surface.

- Use the screw cap opening on the solar fluid container to carry out the visual check.
- Set the 3-way ball valve (**15**) on the solar pump unit to 45° (non-return valve out of operation).
- Allow the filling pump to run for a further 5 minutes to vent the pipeline between the combined filling and draining taps (**1**) and (**16**).
- After 5 minutes, close the 3-way ball valve (**15**) again (horizontal position).
- Close the combined filling and draining taps (**1**) and (**16**) and then immediately switch off the filling pump.
- Place the 3-way ball valve (**15**) into the vertical position again (flow and non-return valve working).
- Remove the pressure hose and return hose of the solar circuit combined filling and draining taps.

The system is now filled and vented.

7.4 Setting the flow rate in the solar circuit

In addition to factors such as the temperature, pipe diameter, number of collectors and so on, the flow rate is important for ensuring optimum heat transfer. A flow rate above the nominal flow rate is not as unfavourable as a flow rate below the nominal flow rate.

Never allow the flow rate to fall below the nominal flow rate. Doing so can cause the efficiency of the collectors to drop significantly, resulting in a solar yield of up to 10% less and unnecessarily high power consumption by the solar pump.

The solar pump unit has a three-stage solar pump and a flow rate limiter to enable it to optimally modify the flow rate in line with the collector performance.

- In conjunction with central air vents, the flow rate in the solar circuit should be at least 3 l/min so that the residual air in the system is pulled along with the solar fluid and conveyed to the air vents.
- You must maintain a flow rate of at least 0.25 l/m^2 min in the collector array.
- In the case of small systems with a net area of up to 10 m^2, a flow rate of 0.50 to 0.67 l/m^2 min is recommended in the collector array.
- In the case of larger systems, the flow rate in the collector array must be lower than 0.50 l/m^2 min.

For a suitable nominal flow rate for the collectors, pipe diameter, and pipe length used, see Tab. 6.1 and 6.2.

➤ Determine the nominal flow rate to be set from Tab. 6.1/6.2.
➤ Completely open the flow rate limiter with the control valve (**1**).
➤ Allow the solar pump to run on the lowest pump speed.
➤ Check the flow rate on the indicator (**2**) of the flow rate limiter.
➤ Choose a pump speed that sets the flow rate to equal to or more than the nominal flow rate.
  - If the actual flow rate is lower than the nominal flow rate, switch to the next higher pump speed.
  - If the nominal flow rate cannot be reached even at the highest pump speed, check to see whether it is possible to connect less collectors in series and to switch to a combination of series and parallel connections. Check out other ways of reducing the pressure loss. Observe here the Vaillant solar planning information.
➤ Use the control valve (**1**) of the flow rate limiter to set the flow rate so that it is slightly higher than the nominal flow rate.

If you are using the auroMATIC 620 controller, you can use the set flow rate to calculate the yield.

➤ Enter the set flow rate on the controller; the controller then calculates the yield.

For more information, see the operating and installation instructions for the controller.

Set the flow rate in the solar circuit as specified in → **tab. 6.1** or → **tab. 6.2**.

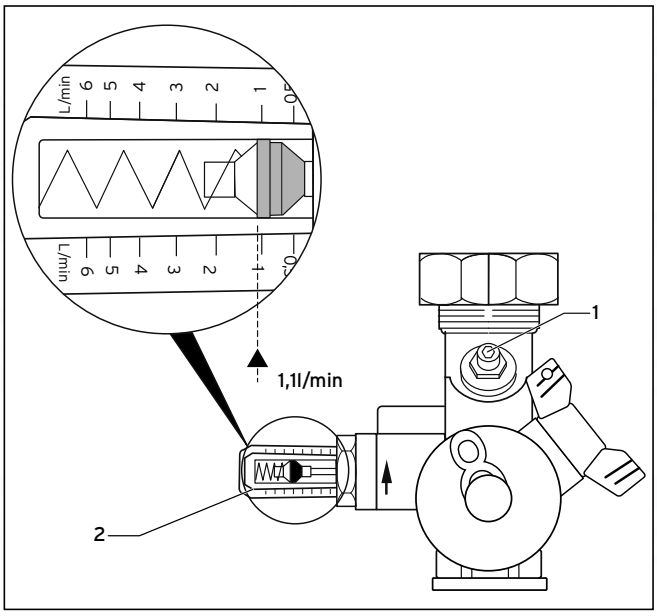

Fig. 7.2 Flow rate limiter

7.5 Flushing the primary heating circuit

Detailed recommendations for the water circuit can be found in BS 6798 and BS 5449: Part 1 (for central heating systems with both small and the smallest pipe width).
Pipes which do not form part of the usable heating surface must be insulated in order to prevent heat losses and possible freezing. Pipe insulation is particularly important if you are installing pipes under the roof or in open areas under the floor.
Discharge valves must be mounted in easily accessible locations, so that the entire system, including the boiler and hot water system, can be discharged. Discharge valves must have a nominal size of 1/2 inch BSP and comply with BS 2879.
Copper pipes which comply with BS 2871: Part 1 for water-carrying pipes must be used. All soldered connections in the private hot water pipe system must be made with lead-free soldering material.

Caution!
Risk of material damage as a result of deposits in the unit or system!
Cleaning agents can result in deposits and follow-on damages.
- ➤ Use a suitable cleaning agent in accordance with this instruction manual.
- ➤ Never leave cleaning agents in the system for longer than 24 hours.
- ➤ Completely remove the cleaning agents from the system by flushing it thoroughly.

All cleaning must be performed before installing the new boiler and must comply with BS 7593. Information on the use of cleaning agents for the system can be obtained from Sentinel, Betz Dearborn Ltd. Widnes, Cheshire, WA8 8UD. Tel: 0151 420 9595, or Fernox, Alpha Fry Technologies, Tandem House, Marlow Way, Croydon, CR0 4XS. Tel: 0870 8700362.

7.6 Water treatment

Caution!
The use of unsuitable heating water can cause aluminium corrosion resulting in leaks!
In contrast to steel, grey cast iron, and copper, for example, aluminium reacts with alkaline heating water (pH value > 8.5) to produce substantial corrosion.
- ➤ When using aluminium, make sure that the pH value of the heating water is between 6.5 and a maximum of 8.5.

Caution!
Risk of material damage as a result of enriching the heating water with unsuitable frost or corrosion protection agents!
Frost and corrosion protection agents can cause changes to the seals, noises during heating mode and possibly subsequent damage.
- ➤ Do not use any unsuitable frost and corrosion protection agents.

Mixing additives with the heating water can result in material damage. However no incompatibility with Vaillant units has been detected with proper use of the following products over a long period.
- ➤ When using additives, follow the manufacturer's instructions without exception.

Vaillant does not accept any liability relating to the compatibility or efficiency of any additives throughout the heating system

Additives for cleaning measures (subsequent flushing required)
- Fernox F3
- Sentinel X 300
- Sentinel X 400

Additives intended to remain permanently in the system
- Fernox F1
- Fernox F2
- Sentinel X 100
- Sentinel X 200

Additives for frost protection intended to remain permanently in the system
- Fernox Antifreeze Alphi 11
- Sentinel X 500

- Inform the operator of the necessary measures if you have used these additives.
- Inform the operator about the required measures for frost protection.

- Observe all valid national and technical regulations when treating the filling and supplementary water.

Provided the national regulations and technical standards do not stipulate more stringent requirements, the following applies:

- You must treat the heating water in the following cases:
  - If the entire filling and supplementary water quantity during the operating life of the system exceeds three times the nominal volume of the heating system or
  - If the limit values shown in the tables are not observed.

Total heating output	Overall hardness at smallest boiler heating surface[2)]		
	20 l/kW	> 20 l/kW < 50 l/kW	> 50 l/kW
kW	mol/m³	mol/m³	mol/m³
< 50	No requirement or < 3[1)]	2	0,02
> 50 to ≤ 200	2	1,5	0,02
> 200 to ≤ 600	1,5	0,02	0,02
> 600	0,02	0,02	0,02

1) For systems with circulation water heaters and for systems with electric heating elements

2) Of specific system volume (nominal content in litres/heating output; in the case of multi-boiler systems, the smallest single heating output is to be used).
These values only apply up to 3 times the system volume for filling and supplementary water. Once this triple system volume is exceeded, the water will have to be treated exactly the same as in case of exceeding the limit values given in this table (softening, desalination, hardness stabilisation and desludging).

Table 7.3 Guidelines for the heating water: Water hardness

Heating water characteristics	Unit	Low-salt	Saline
Electrical conductivity at 25 °C	µS/cm	< 100	100 - 1500
Appearance		Free from sedimentary materials	
pH value at 25 °C		8,2 - 10,0	8,2 - 10,0
Oxygen	mg/l	< 0.1	< 0.02

Table 7.4 Guidelines for the heating water: Salt content

7.7 Filling the cylinder

Caution!
Risk of material damage due to unsuitable water!
Unsuitable water can lead to deposits and corrosion damage in the cylinder and in the hot water circuit.
- Use only potable water with a chloride content of below 250 mg/l in the hot water circuit.

Use the draw-off points to vent the cylinder and water pipes. Do not use the combined temperature/pressure relief valve of the cylinder or the pressure relief valve of the cold water safety assembly for venting, since foreign bodies can contaminate or damage the valves.

- Make sure that the drain valve is closed.
- Open all of the draw-off points in the cold and hot water pipes.
- Open the water supply inlet to the cylinder and allow the water to run until bubble-free water runs from all of the draw-off points and the air is removed from the system.
- Close all of the draw-off points.
- Check the system for leaks.
  In particular, check the installed electric immersion heater for leaks.
- Open two hot water draw-off points, one at the lowest point and one at the highest point of the pipe system, and allow water to run for at least 5 minutes.
- Close both of the hot water draw-off points.

7.8 Filling the central heating system

The system can be filled using the built-in filling loop (ecoTEC plus combi boiler only) or via a separate filling connection that is fitted at an easily accessible location in the heating circuit. The filling loop must be removed once filling is complete. If a temporary connection is not possible due to legal regulations, a closed system filling pump with a buffer tank must be used.
The heating system is not automatically supplied from the hot water side of the central heating. Alternative procedures for filling closed systems can be found in BS 5449.

Do not use the pressure relief valve of the gas-fired wall-hung boiler for venting.

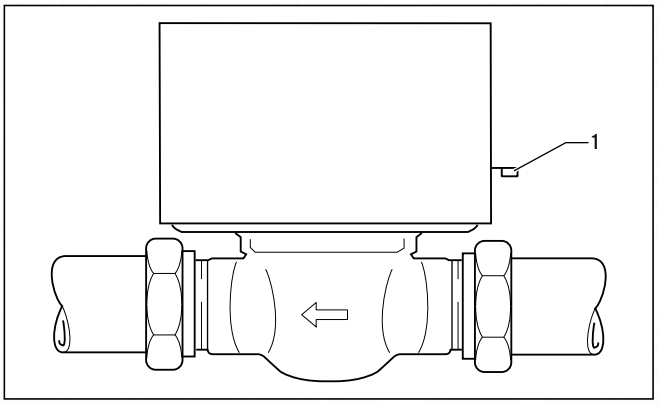

Fig. 7.3 Two port motorised valve

- Place the lever (**1**) on the two port motorised valve to "MAN OPEN" and lock it into this position.
- Flush the entire primary central heating system including the primary heating circuit with cold and hot water.
- Flush, fill, and vent the central heating system in accordance with the installation instructions of the gas-fired wall-hung boiler.
- Release the lever on the two port motorised valve by placing it in the "AUTO" position.

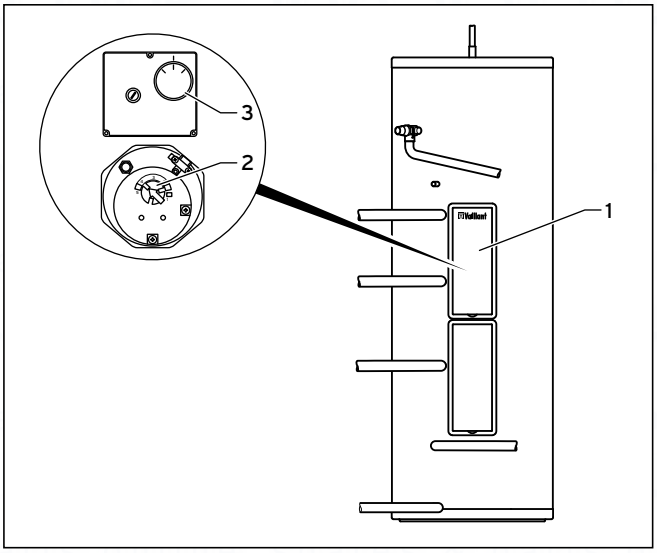

Fig. 7.4 Setting thermostats

- Remove the upper front cladding (**1**) from the cylinder.
- Dismantle the electric immersion heater cover.
- Set the cylinder thermostat (**3**) and the electric immersion heater thermostat (**2**) to a maximum of 60 °C for commissioning and to achieve maximum energy efficiency.
- Commission the gas-fired wall-hung boiler (→ **section 7.9**) until the cylinder reaches the operating temperature and all radiators in the system are hot.
- Then drain the entire central heating system again to remove any residue from the pipes.
- Fill and vent the entire central heating system again as described in the installation instructions for the gas-fired wall-hung boiler.

7.9 Commissioning the gas-fired wall-hung boiler

- Make sure that the control device and thermostats are set so that heating is required.
- Carry out the commissioning and testing measures for the gas-fired wall-hung boiler in accordance with the installation instructions.
- Check whether the gas-fired wall-hung boiler starts operating and the water in the cylinder and radiators heats up in accordance with the hot water and room thermostat settings.
- After completing the commissioning measures, set the hot water temperature on the controller (e.g. auroMATIC 560/2 solar controller) to a maximum of 60 °C to achieve optimum energy efficiency in your solar heating system. If you are controlling the hot water temperature via the cylinder thermostat installed in the cylinder, switch the cylinder thermostat (**2**) on as follows. Set the electric immersion heater thermostat (**1**) to the required temperature.
- Reattach the cover for the electric immersion heater and the upper front cladding of the cylinder.

7.10 Setting the hot water thermostat mixer

Danger!
Risk of burns and scalds!
Water at a temperature of more than 60 °C can escape from the water draw-off point.
- Install a hot water thermostat mixer in the hot water pipe to provide effective scald protection.
- Set the hot water thermostat mixer to less than 60 °C and check the temperature at a hot water draw-off point.

You can set the hot water from the cylinder to a desired maximum temperature of between 30 and 70 °C by mixing hot and cold water.
- Regulate the hot water thermostat mixer via the adjusting knob to maintain the required temperature on the hot water taps.

7.11 Filling in the commissioning report

- Fill in the benchmark cylinder commissioning checklist located on the last few pages of these instructions.

7.12 Handover to the operator

- Hand over the appropriate instructions and cylinder papers to the operator.
- Make the operator aware that the instructions must be kept near to the unit.
- Draw special attention to the safety instructions which the operator must follow.
- Explain to the operator how to safely use the gas-fired wall-hung boiler, cylinder, and control devices.
- Explain to the operator how to use the solar controller, hot water control system, and heating control system. Inform the operator that he can improve the solar yield by limiting the cylinder heating by lowering the target cylinder temperature.

In regions with hard water, the set hot water temperature must not exceed 60 °C to avoid scaling.

- Go through the operating instructions with the operator and answer any questions.
- Inform the operator of the required precautionary measures to prevent damage to the system and building if the system is not kept in operation during frost.
- In addition, inform the operator that the electric immersion heater is intended as a reserve appliance for water heating and must not be used to heat water in the cylinder at the same time as the gas-fired wall-hung boiler.
- In addition, inform the operator that the settings you have made on the solar heating system must not be changed.
- Inform the operator that the gas-fired wall-hung boiler and the cylinder must be serviced at least once a year by a qualified competent person. Recommend a maintenance agreement with a specialist workshop to ensure the regular maintenance of the gas-fired wall-hung boiler and cylinder.

For more information, contact Vaillant customer service.

8 Inspection and maintenance

Vaillant solar heating systems are designed for a long and stable working life. In order to guarantee this, the solar heating system should be maintained annually by a competent person approved at the time by the Health and Safety Executive.
This can be performed at the same time as boiler and cylinder maintenance and consists primarily of visual inspections.
Inspection access to the cylinder is available through the immersion heater boss.

The essential maintenance work on the solar heating system and corresponding maintenance intervals are specified in the following table.

Servicing
After servicing, the servicing engineer must complete the relevant Service Interval Record section of the Benchmark Checklist located on the inside back pages of this document.

Procuring spare parts
If you require spare parts for maintenance or repair work, you must use only Vaillant genuine spare parts. The original components of the unit were also certified as part of the CE declaration of conformity. If you do not use certified Vaillant genuine spare parts, this voids the CE conformity of the unit. We therefore strongly recommend that you fit Vaillant genuine spare parts.

Replacement parts
An overview of the available genuine Vaillant spare parts can be obtained:
- From your parts wholesaler.
- Alternatively contact Spares Technical Enquiries on 01773 596615
  or via email: technicalspares@groupservice.co.uk

Maintenance work	Maintenance interval
Solar circuit	
Check the system pressure at the gauge on the solar pump station.	Annually
Visually check pipe work and connections for solar fluid leaks.	Annually
Check the solar fluid discharge pipe is secure and canister is empty.	Annually
If necessary following above checks arrange for corrective work to be carried out. Ensure system cannot go into stagnation. Avoid middle of day (cover collectors if possible). Depressurise the system. NOTE: Drain fluid into suitable canisters. Carry out any repairs to correct any leaks found.	
Check the pH value of the solar fluid (with litmus paper, pH > 7.5).	Annually
Check the frost protection of the solar fluid (use the Vaillant solar fluid tester).	Annually
Check the operation of the solar pump.	Annually
Check the flow rate in the solar circuit is set correctly for the system.	Annually
Collector Array	
Visual inspection of the collector, collector fastenings and connections. Visual inspection only from suitable safe location.	Annually
Check the pipe insulation for damage and arrange repair if necessary.	Annually
Solar controller	
Check and record solar gains. Reset as necessary.	Annually
Check the sensors are secure and temperatures correctly displayed (KOL1, SP1 and SP2).	Annually
Check settings are correct (see controller manual for details).	Annually
Check the time programme and temperature settings for auxiliary reheat are correct.	Annually
Cylinder	
Check all connections to ensure that there are no leaks.	Annually
Check the temperature and pressure relief valve.	Annually
Check the expansion relief valve.	Annually
Check the charge pressure of the hot water expansion vessel.	Annually
Check water flow rates are correct (check and clean filters as necessary).	Annually
Ensure set temperatures are correct	Annually
Check the charge pressure of the expansion vessel, re-pressurise as necessary.	Annually
Check the function of the hot water thermostat mixer.	Annually
Fill in the service section of the Benchmark cylinder commissioning checklist.	Annually

Tab. 8.1 Maintenance checklist

8.1 Checking the temperature/pressure relief valve and expansion relief valve

- Open each valve manually by turning the valve cap and check whether water is able to flow to the drain via the tundish without obstruction. Make sure that both valves sit correctly in their idle position.

8.2 Checking the charge pressure of the expansion vessel

- Shut off the water supply pipe and open the nearest hot water draw-off point to discharge the pressure from the secondary water system.
- Use a pressure gauge to check the expansion vessel pressure at the measuring point. If the pressure is below 3.0 bar, increase it using a suitable air pump.
- Fill in the maintenance section of the commissioning report.

8.3 Draining the cylinder

- Close the cold water supply pipe.
- Secure a hose to the drain valve.
- Place the free end of the hose in a suitable discharge position. The opening should be around 1 m beneath the cylinder.
- Open the highest hot water draw-off point to reduce the pressure and vent the water pipes, thus draining them completely.
- Open the cylinder drain valve and leave open until no more water escapes and the cylinder is completely empty.
- Once the water has drained out, close the hot water draw-off point and the drain valve.
- Remove the hose from the drain valve.

9 Fault finding

The tables below provide information on possible faults when the solar heating system is being operated, information on their causes and how to rectify them.
All work on the Vaillant solar heating system (installation, maintenance, repairs etc.) may be performed only by approved competent persons.

Danger!
Risk of death from electric shock!
Improperly executed work on the solar heating system can result in risk to life and limb.
➤ Faults may only be eliminated by a competent person approved at the time by the Health and Safety Executive.

Caution!
Risk of damage due to overheating!
Not all electric immersion heaters have a thermal cut-out.
➤ Use only Vaillant Ltd. electric immersion heaters with a thermal cut-out as replacement parts.

When replacing parts, use only original replacement parts from Vaillant Ltd.

We recommend entering into a maintenance agreement.

Fault	Cause	Remedy
Solar pump		
The solar pump doesn't work even though the collector is warmer than the cylinder. (neither motor noises can be heard nor vibrations felt).	1. No current available.	Check the power cable and fuses.
	2. Temperature difference set too high or controller is not switching.	Check the controller.
		Check the temperature sensors.
		Reduce the temperature difference.
	3. Maximum temperature reached.	
	4. The solar pump shaft is blocked by deposits on the bearings.	Switch temporarily to max. speed or unblock the rotor, insert a screwdriver in the notch and turn it by hand.
	5. The solar pump is dirty.	Dismantle and clean the solar pump. Close the flow rate limiter and pump ball valve.
	6. Solar pump is faulty.	Replace the solar pump.
	7. The flow rate is not set correctly.	Check the setting and adjust if necessary.
The solar pump is running but no solar fluid is flowing from the collector (the solar pump is getting hot). Forward- and return flow temperatures are the same or the cylinder temperature is not increasing at all or only slowly.	Air is in the pipe system.	Check the system pressure. Operate the solar pump intermittently at maximum output. Open the air vent on the solar pump and open and vent the cylinder. Vent the backflow preventer. If there is no improvement, check whether there is a "u pocket" anywhere in the piping (e. g. at beam projections or at the bend of water pipes). Change the pipe routing or install additional air vents. if the system has already been commissioned and is refilled again, check the automatic air vent: Unscrew the protective cap and check the float using a blunt pin to make sure that it can move freely. If the floater is jammed, change the air vent.
The solar pump kicks in late and stops early.	1. The temperature difference between the collector and cylinder has been set too high.	Reduce the temperature difference.
	2. Collector connection pieces not insulated (tube collector).	Insulate the collector connection pieces.

Table 9.1 Troubleshooting

Fault	Cause	Remedy
The solar pump starts up and switches off again shortly afterwards. This is repeated several times until the system runs its course. The same occurs in the evening.	The controller temperature difference is too small or the pump speed has been set too high. The solar radiation is not yet sufficient to heat up the entire pipework.	Check whether the entire pipework is fully insulated. Increase the temperature difference of the controller.
The solar pump is making noises.	1. There is air in the solar pump.	Vent the solar pump.
	2. Insufficient system pressure.	Increase the system pressure.
Solar heating system		
Clocking of the system.	Incorrect position of the collector sensor	Position the collector sensor in the flow. Insulate the collector sensor.
The pressure gauge indicates a drop in pressure.	Pressure loss is normal shortly after filling the system, since air still escapes from the system. If a drop in pressure occurs again later on, it might be caused by an air bubble which was released later. Furthermore, there are fluctuations to the pressure in normal operation mode between 0.2 to 0.3 bar, depending on the system temperature. If the pressure drops continuously, there is a leak in the solar circuit, probably in the collector array.	First check all screw connections, stuffing boxes at gate valves and threaded connections, then the soldering points. Check the collector array and replace a tube or the collector if necessary.
The water pressure and amount of discharged water decreases at hot water draw-off points.	Pressure in the main cold water supply too low.	Tell the operator to notify the water supplier.
	Line strainer in the pressure reducing valve dirty.	Clean the line strainer in the pressure reducing valve and replace it if necessary.
	Pressure reducing valve faulty.	Replace the pressure reducing valve.
	Blockage in the system.	Unblock the blockage and replace any blocked parts.
		Check the system to see if air is escaping from the expansion relief valve and temperature/pressure relief valve.
The system is making noises. Normal for the first few days after filling the system. If it occurs later, there are two possible causes:	1. System pressure is too low. The solar pump is pulling in air via the air vent.	Increase the system pressure.
	2. Pump output set too high.	Switch to a lower speed.
The solar yield is unusually low.	The pipe insulation is too thin or incorrect. The system may have been designed incorrectly.	Check the insulation. Check the design of the system (collector size, shading, pipe length) and modify the system if necessary.
Solar controller		
auroMATIC 560/2: display example "KOL 1 Err" or similar	Faulty sensor (short circuit or interruption).	1. Test the cable connection. 2. Measure the resistance values of the disconnected sensor at known temperatures, and compare these with the manufacturer's details. 3. Inspect the piping for damage.
Cylinder		
The cylinder cools down at night. After the solar pump is switched off, the supply and return lines have different temperatures. The collector temperature is higher than the air temperature at night.	1. The non-return valve is blocked.	1. Check the position of the blue handle. 2. Check the non-return valve for tightness (jammed cuttings, particles of dirt in the sealing face). 3. Do not connect the solar heat exchanger directly; instead, first pull the supply lines downwards and then upwards to the collector (the siphon supports the non-return valve) or mount a two port valve which is switched at the same time as the solar pump.
	2. One-pipe circulation in the case of short tube networks with low pressure loss.	Install a non-return valve (as close as possible to the cylinder).

Tab. 9.1 Troubleshooting (continued)

Fault	Cause	Remedy
Primary heating is not working. The gas-fired wall-hung boiler runs for a short time, goes off, and then comes back on again. This is repeated until the cylinder is at its target temperature.	1. Air in the primary heating heat exchanger.	Vent the primary heating heat exchanger.
	2. Heat exchanger surface area too small.	Compare the specifications of the boiler manufacturer with those of the cylinder manufacturer. It may be possible to solve the problem by setting a higher flow temperature on the gas-fired wall-hung boiler.
Only cold or lukewarm water comes out of the draw-off points.	1. The cold and hot water draw offs on the cylinder have been mixed up.	Turn off the cold water supply, then let water flow out via the hot water draw off. Only a few litres of water flow out if the connection is set up correctly. The hot water withdrawal pipe intake is then in the air space and further draining is not possible. If it is possible to empty the entire cylinder via the hot water draw off, the connections have been laid incorrectly. Change the connections!
	2. Hot water thermostat mixer set too low.	Increase the setting.
	3. Solar heating insufficient; gas-fired wall-hung boiler does not reheat. External control device faulty. Air in the primary heating heat exchanger. Cylinder sensor faulty.	Check whether the gas-fired wall-hung boiler is working. Check whether the external control device is working. Check that the two port valve is in the DHW position. Replace the two port valve. Vent the primary heating heat exchanger. Check the thermal cut-out and repair the fault. Replace the cylinder thermostat.
Water flows out of the expansion relief valve (only when heating up).	Dirt on the valve seat of the expansion relief valve.	Check the seat of the expansion relief valve and repair the fault.
	Pressure reducing valve faulty.	If water only escapes during heating, switch off the gas-fired wall-hung boiler and electric immersion heater and check whether the pressure behind the pressure reducing valve is lower than 3.0 bar. If so, replace the pressure reducing valve.
	Expansion vessel faulty.	Check the pressure in the expansion vessel. If the pressure is insufficient, re-establish the pressure and check whether the expansion vessel maintains it.
	Expansion relief valve faulty.	If the pressure is normal, replace the expansion relief valve.
Water flows out of the temperature and pressure relief valve (only when heating up).	Dirt on the valve seat of the temperature and pressure relief valve.	Check the seat of the temperature and pressure relief valve and repair the fault.
	The temperature control system for the gas-fired wall-hung boiler is faulty.	If water is only escaping when being heated up by the gas-fired wall-hung boiler, check the temperature control system of the gas-fired wall-hung boiler. Check whether the two port valve switches to the heating position when the cylinder temperature is reached.
	Cylinder sensor faulty.	Check the cylinder sensor and corresponding thermal cut-out, replace the cylinder sensor if necessary, and repair the thermal cut-out fault.
	Two port valve faulty.	Check the function of the two port valve and replace if necessary.
	Temperature and pressure relief valve faulty.	If water is only escaping when being heated up by the electric immersion heater, replace the temperature and pressure relief valve.
	Electric immersion heater faulty.	Check the temperature sensor of the electric immersion heater and the corresponding thermal cut-out and replace the electric immersion heater if necessary.
Only connection wiring diagram 6: The thermal cut-out for the primary heating circuit actuated at 80 °C, thus causing the two port motorised valve to close the flow line to the cylinder.	The cylinder has been overheated by the solar circuit.	Set the maximum cylinder temperature (MAXT 1) on the VRS 560/2 solar controller to a maximum of 75°C. Use the fuses to deenergise the cylinder thermostat. Unscrew the cover cap of the reset button for the thermal cut-out (TCO) for the primary heating circuit. Press the primary heating circuit TCO button to repair the TCO fault. Mount the cover cap. Switch on the cylinder thermostat using the fuses.

Table 9.1 Troubleshooting (continued)

10 Taking the cylinder out of service

10.1 Temporarily taking the cylinder out of service

Caution!
Risk of damage as a result of the cylinder freezing!
Frost protection and monitoring devices are only active while the boiler is connected up to the power supply.
- ➤ Make sure that the cylinder cannot be damaged if there is a frost.

- ➤ Temporarily take the cylinder out of service by switching the boiler off.

10.2 Permanently taking the cylinder out of service

Danger!
Risk of death from electric shock from live connections!
There is continuous voltage present on the mains connection terminals of the boiler.
- ➤ Interrupt the power supply.
- ➤ Prevent the power supply from being switched on again.
- ➤ Ensure that any electrical work is carried out by a qualified competent person.

- ➤ Switch the boiler off.
- ➤ Drain the cylinder (→ **section 8.3**).
- ➤ Dismantle the hydraulic connections.
- ➤ Dismantle the temperature sensor.
- ➤ Remove the wiring for the temperature sensor from the boiler or external controller.

11 Recycling and disposal

Both the cylinder and its transport packaging are made primarily of recyclable raw materials.

11.1 Cylinder disposal

You must not dispose of the cylinder or any of its accessories in normal domestic rubbish.
- ➤ Dispose of the old unit and any accessories properly and in accordance with national regulations.

11.2 Disposal of packaging

The heating specialist company which installs the unit is responsible for disposing of the transport packaging.
- ➤ Observe national regulations.

12 Customer service and manufacturer's guarantee

12.1 Vaillant service

To ensure regular servicing, it is strongly recommended that arrangements are made for a Maintenance Agreement. Please contact Vaillant Service Solutions (0870 6060 777) for further details.

12.2 Vaillant guarantee

Vaillant provides a full parts and labour guarantee for this appliance.
The appliance and all associated pipe work and controls must be installed by suitably competent persons in accordance with all current and relevant safety, building control and planning regulations and in full compliance with the manufacturer’s instructions.
All unvented domestic hot water cylinders must be installed by a competent person to the prevailing building regulations at the time of installation (G3).
Terms and conditions apply to the guarantee, details of which can be found on the guarantee registration card included with this appliance.
Failure to install and commission this appliance in compliance with the manufacturer’s instructions will invalidate the guarantee (this does not affect the customer’s statutory rights).

Commissioning checklist and service record

benchmark
COLLECTIVE MARK
THE MARK OF QUALITY FOR THE INSTALLATION, COMMISSIONING AND SERVICING OF DOMESTIC HEATING AND HOT WATER SYSTEMS

MAINS PRESSURE HOT WATER STORAGE SYSTEM COMMISSIONING CHECKLIST

This Commissioning Checklist is to be completed in full by the competent person who commissioned the storage system as a means of demonstrating compliance with the appropriate Building Regulations and then handed to the customer to keep for future reference.

Failure to install and commission this equipment to the manufacturer's instructions will invalidate the warranty but does not affect statutory rights.

Customer Name _____ Telephone Number _____

Address _____

Cylinder Make and Model _____

Cylinder Serial Number _____

Commissioned by *(print name)* _____ Registered Operative ID Number _____

Company Name _____ Telephone Number _____

Company Address _____

_____ Commissioning Date _____

To be completed by the customer on receipt of a Building Regulations Compliance Certificate*:

Building Regulations Notification Number *(if applicable)* _____

ALL SYSTEMS PRIMARY SETTINGS (indirect heating only)

Is the primary circuit a sealed or open vented system?	Sealed ☐	Open ☐	
What is the maximum primary flow temperature?			°C

ALL SYSTEMS

What is the incoming static cold water pressure at the inlet to the system?				bar
Has a strainer been cleaned of installation debris (if fitted)?	Yes ☐	No ☐		
Is the installation in a hard water area (above 200ppm)?	Yes ☐	No ☐		
If yes, has a water scale reducer been fitted?	Yes ☐	No ☐		
What type of scale reducer has been fitted?				
What is the hot water thermostat set temperature?				°C
What is the maximum hot water flow rate at set thermostat temperature (measured at high flow outlet)?				l/min
Time and temperature controls have been fitted in compliance with Part L of the Building Regulations?			Yes ☐	
Type of control system (if applicable)	Y Plan ☐	S Plan ☐	Other ☐	
Is the cylinder solar (or other renewable) compatible?	Yes ☐	No ☐		
What is the hot water temperature at the nearest outlet?				°C
All appropriate pipes have been insulated up to 1 metre or the point where they become concealed			Yes ☐	

UNVENTED SYSTEMS ONLY

Where is the pressure reducing valve situated (if fitted)?				
What is the pressure reducing valve setting?				bar
Has a combined temperature and pressure relief valve and expansion valve been fitted and discharge tested?	Yes ☐	No ☐		
The tundish and discharge pipework have been connected and terminated to Part G of the Building Regulations			Yes ☐	
Are all energy sources fitted with a cut out device?	Yes ☐	No ☐		
Has the expansion vessel or internal air space been checked?	Yes ☐	No ☐		

THERMAL STORES ONLY

What store temperature is achievable?		°C
What is the maximum hot water temperature?		°C

ALL INSTALLATIONS

The hot water system complies with the appropriate Building Regulations	Yes ☐
The system has been installed and commissioned in accordance with the manufacturer's instructions	Yes ☐
The system controls have been demonstrated to and understood by the customer	Yes ☐
The manufacturer's literature, including Benchmark Checklist and Service Record, has been explained and left with the customer	Yes ☐

Commissioning Engineer's Signature _____

Customer's Signature _____

(To confirm satisfactory demonstration and receipt of manufacturer's literature)

*All installations in England and Wales must be notified to Local Authority Building Control (LABC) either directly or through a Competent Persons Scheme. A Building Regulations Compliance Certificate will then be issued to the customer.

benchmark COLLECTIVE MARK
THE MARK OF QUALITY FOR THE INSTALLATION, COMMISSIONING AND SERVICING OF DOMESTIC HEATING AND HOT WATER SYSTEMS

©Heating and Hotwater Industry Council (HHIC)

SERVICE RECORD

It is recommended that your hot water system is serviced regularly and that the appropriate Service Record is completed.

Service Provider

Before completing the appropriate Service Record below, please ensure you have carried out the service as described in the manufacturer's instructions.

SERVICE 1 Date

Engineer Name

Company Name

Telephone Number

Comments

Signature

SERVICE 2 Date

Engineer Name

Company Name

Telephone Number

Comments

Signature

SERVICE 3 Date

Engineer Name

Company Name

Telephone Number

Comments

Signature

SERVICE 4 Date

Engineer Name

Company Name

Telephone Number

Comments

Signature

SERVICE 5 Date

Engineer Name

Company Name

Telephone Number

Comments

Signature

SERVICE 6 Date

Engineer Name

Company Name

Telephone Number

Comments

Signature

SERVICE 7 Date

Engineer Name

Company Name

Telephone Number

Comments

Signature

SERVICE 8 Date

Engineer Name

Company Name

Telephone Number

Comments

Signature

SERVICE 9 Date

Engineer Name

Company Name

Telephone Number

Comments

Signature

SERVICE 10 Date

Engineer Name

Company Name

Telephone Number

Comments

Signature

SOLAR THERMAL COMMISSIONING CHECKLIST

This Commissioning Checklist is to be completed in full by the competent person who commissioned the Solar Thermal System and associated equipment as a means of demonstrating compliance with the appropriate Building Regulations and then handed to the customer to keep for future reference.

Failure to install and commission this equipment to the manufacturer's instructions will invalidate the warranty but does not affect statutory rights.

Customer Name | Telephone Number

Address

Commissioned by *(print name)*

Company Name | Telephone Number

Company Address

Commissioning Date

To be completed by the customer on receipt of a Building Regulations Compliance Certificate.

Building Regulations Notification Number *(if applicable)*

Confirmation that required areas of the installation have been notified to Local Authority Building Control (LABC)

a). Initials of commissioning engineer

b). Competent Persons Scheme (CPS) details or details of LABC direct notiification

Confirmation that panels have been installed without lessening the structure, weathering and fire resistance of the roof in accordance with the relevant Building Regulations and standards. Initials of commissioning engineer

COLLECTOR DETAILS

Make of collector | Model of collector

Serial number of each collector: *(if more than 6 collectors please append additional sheet)*

i. | ii. | iii.

Iv. | v. | vi.

INSTALLATION DETAILS

Solar System Operating Pressure ☐ bar (cold) | Expansion vessel air/nitrogen charge ☐ bar (cold)

Expansion or drain back vessel size ☐ litres

Operating correctly: Yes ☐ | Treated for leaks and flushed: Yes ☐ | Filled and purged for air: Yes ☐

System heat transfer fluid details:

What type/make of heat transfer fluid used? | System volume ☐ litres

What is the fluid mix: Water ☐ % | Glycol ☐ %

Frost protection provided to ☐ °C

Is the installation in a hard water area (above 200ppm)? Yes ☐ No ☐

If yes, has a water scale reducer been fitted or has Tmax been limited to 60˚C? Yes ☐ No ☐

What type of scale reducer has been fitted?

Air purged from solar primary circuit: Yes ☐ | Primary circuit valves and air vent(s) set to final operating positions: Yes ☐

Pump speed setting recorded: Speed setting | Max flow rate ☐ litres/min

Solar primary circuit pressure relief valves tested for correct operation: Yes ☐ | Location

Device for limiting hot water temperature outlets has been fitted: Yes ☐ No ☐

Type | Location

All exposed pipework lagged in accordance with regulations using suitably temperature rated materials Yes ☐

For unvented hot water storage cylinder, will controls stop solar fluid circulation in the event of cylinder overheating? Yes ☐

SOLAR SYSTEM CONTROLS

Make and model of DTC

Temperature sensors checked and operating correctly Yes ☐

Differential Temperature Controller (DTC) settings: T on ☐ °C | T off ☐ °C

T max ☐ °C | Other DTC Settings

Thermostat located in back-up heating zone of cylinder Yes ☐ No ☐

Have optimum settings for HW controls been explained to the customer? Yes ☐ No ☐

Does this include Legionella Bacteria protection settings with back up heating system to bring boiler volume to 60°C for an hour once a day? Yes ☐ No ☐

Electrical installation is accordance with BS7671 Yes ☐

Location of electrical isolation switch to solar control/pump unit

ALL INSTALLATIONS

The heating and hot water system complies with the appropriate Building Regulations Yes ☐

The system and associated products have been installed and commissioned in accordance with the manufacturer's instructions Yes ☐

The efficient operation of system and its controls have been demonstrated to and understood by the customer Yes ☐

The manufacturer's literature, including Benchmark Checklist and Service Record, has been explained and left with the customer Yes ☐

Commissioning Engineer's Signature

Customer's Signature

To confirm satisfactory demonstration and receipt of manufacturer's literature)

* All installations in England and Wales must be notified to Local Authority Building Control (LABC) either directly or through a Competent Persons Scheme. A Building Regulations Compliance Certificate will then be issued to the customer.

benchmark COLLECTIVE MARK

THE MARK OF QUALITY FOR THE INSTALLATION, COMMISSIONING AND SERVICING OF DOMESTIC HEATING AND HOT WATER SYSTEMS

© Heating and Hotwater Industry Council (HHIC)

SERVICE RECORD

It is recommended that your hot water system is serviced regularly and that the appropriate Service Record is completed.

Service Provider

Before completing the appropriate Service Record below, please ensure you have carried out the service as described in the manufacturer's instructions.

SERVICE 1 Date

Engineer Name

Company Name

Telephone Number

Comments

Signature

SERVICE 2 Date

Engineer Name

Company Name

Telephone Number

Comments

Signature

SERVICE 3 Date

Engineer Name

Company Name

Telephone Number

Comments

Signature

SERVICE 4 Date

Engineer Name

Company Name

Telephone Number

Comments

Signature

SERVICE 5 Date

Engineer Name

Company Name

Telephone Number

Comments

Signature

SERVICE 6 Date

Engineer Name

Company Name

Telephone Number

Comments

Signature

SERVICE 7 Date

Engineer Name

Company Name

Telephone Number

Comments

Signature

SERVICE 8 Date

Engineer Name

Company Name

Telephone Number

Comments

Signature

SERVICE 9 Date

Engineer Name

Company Name

Telephone Number

Comments

Signature

SERVICE 10 Date

Engineer Name

Company Name

Telephone Number

Comments

Signature

spares & parts online IBASIS.CO.UK

Supplier

Vaillant Ltd
Nottingham Road ▮ Belper ▮ Derbyshire ▮ DE56 1JT
Telephone 0845 602 2922 ▮ www.vaillant.co.uk ▮ info@vaillant.co.uk

Manufacturer

Vaillant GmbH
Berghauser Str. 40 ▮ D-42859 Remscheid ▮ Telefon 0 21 91/18-0
Telefax 0 21 91/18-28 10 ▮ www.vaillant.de ▮ info@vaillant.de

0020111119_02 GBIE 022012 - Subject to change