For the competent person and the operator

Installation instructions and instructions for use

VWZ MEH 60

GB

spares & parts online IBASIS.co.uk

Vaillant

Table of contents

1 Safety ... 3
1.1 Intended use ... 3
1.2 Symbols used ... 3
1.3 Qualifications ... 3
1.4 General safety advices ... 3
1.5 Intended use ... 4
1.6 Rules and regulations ... 4
1.7 CE Mark ... 5
2 Notes on the documentation ... 6
2.1 Observe other applicable documents ... 6
2.2 Storing documents ... 6
2.3 Validity of the instructions ... 6
3 Description of the product ... 6
3.1 Product structure ... 6
3.2 Type designation and serial number ... 6
3.3 Data plate description ... 6
4 Mounting and installation ... 7
4.1 Preparing the mounting and installation ... 7
4.2 Mounting the product ... 8
4.3 Hydraulic installation ... 8
4.4 Electrical Installation ... 9
4.5 Cableway and passage ... 11
5 Start up ... 12
5.1 Purging the appliance ... 12
5.2 Installing the casing ... 13
5.3 Handing over the product to the user ... 13
6 Repair work ... 13
6.1 Spare parts ... 13
6.2 Draining the product ... 13
6.3 Resetting the Electrical back-up heater ... 13
6.4 Checking tightness ... 14
6.5 Checking the electrical installation ... 14
7 Decommissioning ... 14
8 Recycling and disposal ... 14
9 Technical data ... 14

1 Safety

This manual is also available on our web site.

www.vaillant.com

1.1 Intended use

This appliance can be used by children aged from 8 years and above and persons with reduced physical, sensory or mental capabilities or lack of experience and knowledge if they have been given supervision or instruction concerning use of the appliance in a safe way and understand the hazards involved. Children shall not play with the appliance. Cleaning and user maintenance shall not be made by children without supervision.

1.2 Symbols used

The warning notes are classified in accordance with the severity of the possible danger using the following warning signs and signal words.

Warning symbol	Explanation
	Danger! Immediate danger to life or risk of severe personal injury.
	Danger! Risk of death from electric shock.
	Warning! Risk of minor personal injury.
	Caution! Risk of material or environmental damage.

1.3 Qualifications

Any work carried out must be by suitably qualified personnel.

► Incorrect installation can cause damage to the unit, to the site or injury to others.

1.4 General safety advices

1.4.1 Danger to life by electric shock

Touching live connections can cause serious personal injury.

► Before carrying out any work on the product, switch off the power supply.

► Secure the power supply against being switched on again.

1.4.2 Danger to life due to missing or not properly working safety devices

Missing safety devices can cause life-threatening scalding and other injuries, for example by burst pipes.

The information contained in this document do not show all schemes required for a professional installation of safety devices.

► Install the necessary safety devices in the system.

► Inform the user about the function and location of safety devices.

► Observe the relevant national and international laws, standards and guidelines.

1.4.3 Risk of material damage by additives in the heating water

Frost and corrosion protection agents can cause changes to seals, noise during heating mode and may lead to other consequential damage.

► Do not use any unsuitable frost or corrosion protection agents.

1.4.4 Risk of material damage caused by unsuitable tools

The use of unsuitable tools or improper use thereof may cause damage, such as gas or water leaks.

► When tightening or loosening threaded connections, always use suitable opened spanners, but do not use pipe wrenches, extensions, etc.

1.4.5 Risk of structural damages by escaping water

Incorrect installation can cause leakages.

► Make sure there are no stresses in the hydraulic lines.

► Correctly position the seals.

1.5 Intended use

The product is a state-of-the-art product which has been constructed in accordance with recognised safety regulations. Nevertheless, there is still a risk of injury or death to the user or others or of damage to the product and other property in the event of improper use or use for which it is not intended.

The appliance is intended to be used for booster heating in systems used with a heat pump.

Intended use includes the following:

- observing the included operating, installation and maintenance instructions for this product and any other parts and components of the system
- installing and fitting the product in accordance with the product and system approval
- complying with all of the inspection and maintenance conditions listed in the instructions.

The appliance should be installed in a place where it will not be exposed to damp or water splashes. Comply with the electrical protection index (IP) shown in the technical data.

Any other use than the use described in the instructions at hand or any use extending the described use is not intended.

Any direct commercial or industrial use is also deemed to be improper.

1.6 Rules and regulations

1.6.5.1 IMPORTANT

Where no British Standards exists, materials and equipment should be fit for their purpose and of suitable quality and workmanship.

The installation of this heating appliance must be carried out by a competent person approved at the time by the Health and Safety Executive and in accordance with the rules in force in the countries of destination.

Manufacturer’s instructions must not be taken as overriding statutory requirements.

1.6.5.2 Statutory Requirements

In GB, the installation of the heating appliance must be carried out by a competent person approved at the time by the Health and Safety Executive and as described in the following regulations:
- The manufacturer’s instructions supplied.
- The appropriate Buildings Regulations either The Building Regulations, The Building Regulations (Scotland), The Building Regulations (Northern Ireland).
- The Water Supply (water fittings) Regulations 1999 and water byelaws 2000, Scotland.
- The Health and Safety at Work Act, Control of Substances Hazardous to Health (COSHH).
- Any electrical work must conform to BS 7671 and where applicable Part P of the building regulations.

Where no specific instructions are given, reference should be made to the relevant British Standard Code of Practice.

In IE, the installation must be carried out by a competent person approved at the time by the Health and Safety Executive and installed in accordance with the current edition of I.S.813 “Domestic Gas Installations”, the current Building Regulations and reference should be made to the current ETCI rules for Electrical Installation.

GB: the following Codes of Practice apply: BS4814, BS6798, BS5440 Part 1 and 2, BS5546 Part 1, BS5449, BS6891, BS6700, BS7074 Part 1 and 2, BS7593, BS7671.
IE: I.S.813, BS5546, BS 5449, BS 7074, BS 7593.

NOTE: For further information, see the current issue of the Building Regulations, approved document L1 (in the UK) and the following current issues of:
1) Central heating system specification (CheSS) and
2) Controls for domestic central heating system and hot water. BRECSU.

1.6.5.3 Heating System

In GB, it is necessary to comply with the Water Supply (Water Fittings) Regulations 1999 (for Scotland, the Water Byelaws 2000, Scotland). To comply with the Water regulations your attention is drawn to: The Water Regulations guide published by the Water Regulations Advisory Service (WRAS) gives full details of the requirements.

In IE, the requirements given in the current edition of I.S.813 “Domestic Gas Installations” and the current Building Regulations must be followed.

1.6.5.4 Electrical Supply

The heating appliance MUST be earthed. All system components shall be of an approved type and all wiring to current I.E.E. wiring regulations. External wiring must be correctly earthed, polarised and in accordance with the relevant standards.

In GB, this is BS 7671.
In IE, this is the current edition of ETCI rules.

The heating appliance MUST be connected to a permanent 230V ac, 50Hz supply. Connection of the whole electrical system of the heating appliance, including any heating controls, to the electrical supply MUST be through one common isolator and must be fused 30 Amp maximum.

Isolation should be by a double pole switched fused spur box, with a minimum gap of 3mm for both poles. The fused spur box should be readily accessible and preferably adjacent to the appliance. It should be identified as to its use.

Alternatively connection can be made through an unswitched shuttered socket and 3A fused 3-pin plug both to the current issue of BS 1363, provided they are not used in a room containing a bath or shower.
Wiring to the heating appliance must be PVC 85OC insulated cable, not less than 3 G4.

1.6.5.5 Control of Substances Hazardous to Health

Under Section 6 of The Health and Safety at Work Act 1974, we are required to provide information on substances hazardous to health. The adhesives and sealants used in this appliance are cured and give no known hazard in this state.

1.7 CE Mark

The CE mark indicates that the appliances described in this manual are in compliance with the following directives :

- Directive 2006/95/EC of the Council with amendments "Directive Concerning Electrical Equipment for Use Within Specific Voltage Limits" (Low voltage directive)
- Directive 2004/108/EC of the Council with amendments "Directive Concerning Electromagnetic Compatibility"

2 Notes on the documentation

2.1 Observe other applicable documents

► Observe absolutely all operating and installation instructions enclosed with the product, for the various parts and components of the system.

2.2 Storing documents

► Pass these instructions and all other applicable documents to the system user.

The system user should retain these instructions so that they are available when required.

2.3 Validity of the instructions

These instructions apply exclusively to:

Product	Type designation	Article number
VWZ MEH 60	6 kW	0020145030

3 Description of the product

3.1 Product structure

3.1.1 Electrical Module

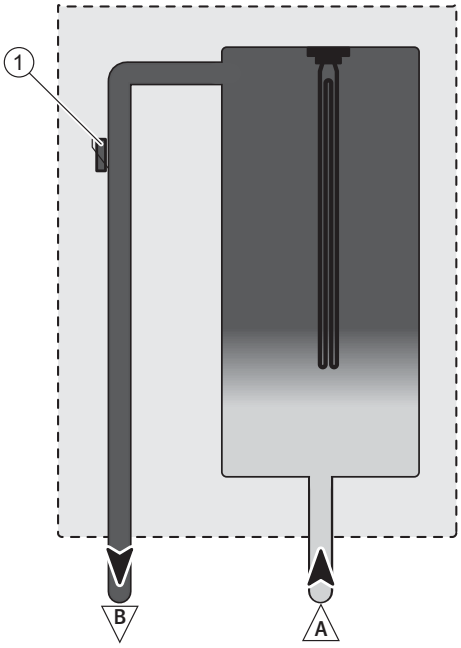

1 Temperature Sensor pocket

B Heat outlet towards the installation

A Heat input from the heat pump

3.2 Type designation and serial number

Data plate location:

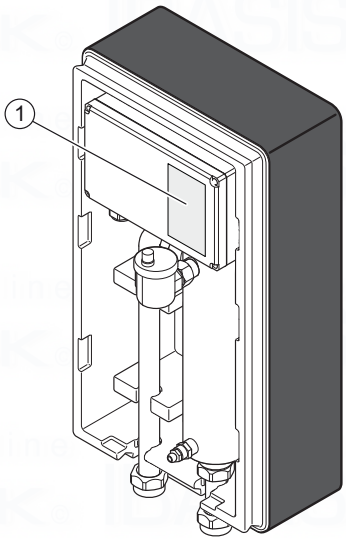

1 Data plate

The type designation and the serial number are shown on the data plate.

3.3 Data plate description

The data plate certifies the country where the product is intended to be installed.

The data plate contains the following data:

Abreviation/ symbol	Description
Country code: "GB"	Country where the product is intended to be installed
Serial-no	Commercial name of the product and its serial number
PS_H min PS_H max	Central heating maximum and minimum hydraulic pressure
V/Hz	Electrical voltage / frequency
I max	Maximum Current
P max	Maximum absorbed power
IP	Index of electrical protection
CE	See chapter "CE Mark"
	See chapter "Recycling and disposal "

4 Mounting and installation

Notes
All the drawings dimensions are shown in mm.

4.1 Preparing the mounting and installation

4.1.1 Delivery and installation on site

4.1.1.1 Unpack

► Remove the product from its box.

► Remove the protective film from all parts of the product.

4.1.1.2 Check scope of delivery

► Please check the scope of delivery for completeness.

- 1 Electrical module
- 1 temperature sensor
- 1 accessories bag
- 1 bag of documents (1 operating and installation)

4.1.2 Observing distances and mounting clearances

4.1.2.1 Product and connection dimensions

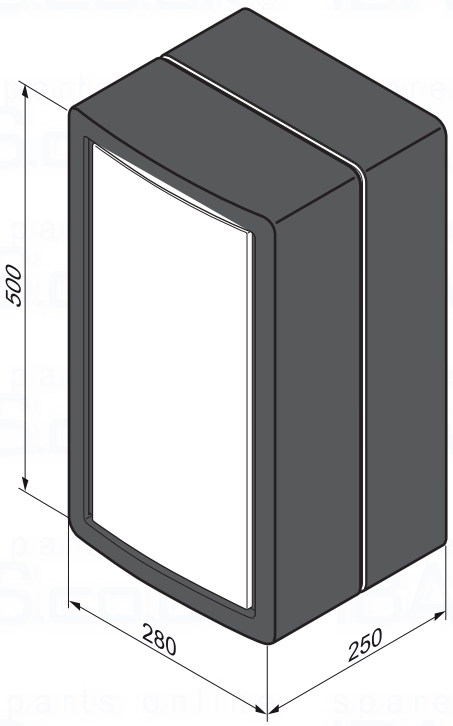

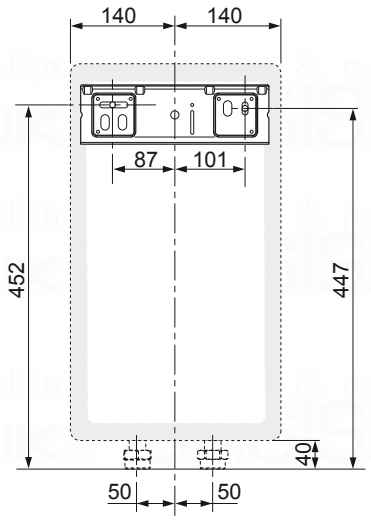

4.1.2.2 Distance to inflammable parts

► Make sure that no item that can easily catch fire is in direct contact with the components, which may reach a temperature greater than 80°C.

► Make sure that there is a minimum distance of 200 mm between items that can easily catch fire and the hot surfaces.

4.1.2.3 Mounting clearances

► Ensure the distances indicated on the diagram.

This will ensure that the connections to the water can be accessed and inspected.

Additional clearances around the appliance may be advantageous for its installation and maintenance.

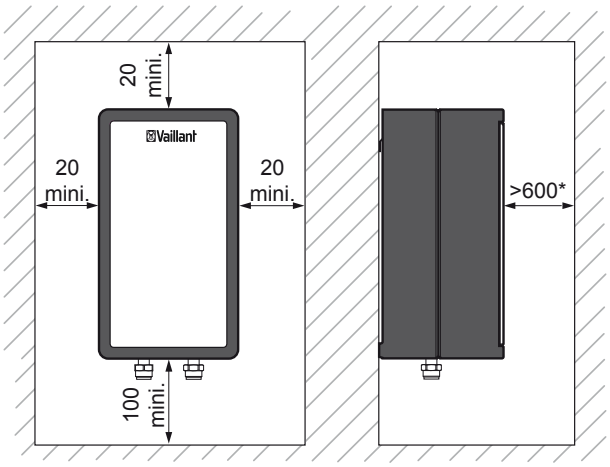

Notes
* Clearance necessary for the installation or maintenance of the appliance.

4.1.3 Considering the product location

4.1.3.1 Surrounding conditions

► Ensure that the room in which the appliance is installed is not heated to the maximum recommended room temperature.
Recommended room temperature: 25°C.

► Do not install the product above another product that could damage it (for example, above a cooker that might emit steam or grease) or in a room, which has a lot of dust in the atmosphere which is corrosive.

► Make sure that the room where you want to fit the product is sufficiently protected against frost.

4.1.3.2 Properties of the mounting surface

► Before choosing a site for the product, carefully read the safety warnings and instructions in the operating instructions and installation instructions.

► Ensure that the wall to which the product will be mounted on is structurally safe in order to support the weight of the product.

4.2 Mounting the product

4.2.1 Removing the casing

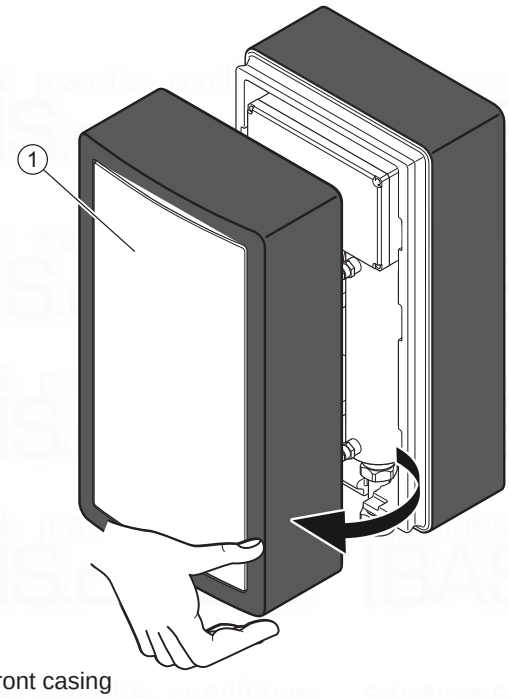

1 Front casing

► Remove the front casing (1).

4.2.2 Wall-mounting of the product

Danger!
Danger to life if the load-bearing capacity of the fixing elements used is insufficient!
If the fixing elements do not have sufficient load-bearing capacity, the product can come loose and fall down.
► When fitting the product, ensure that the fixing elements have a sufficient load-bearing capacity.

► Determine the assembly location.

► Drill the holes to receive the fastenings (see chapter 4.1).

► Fix the hanging bracket on the wall.

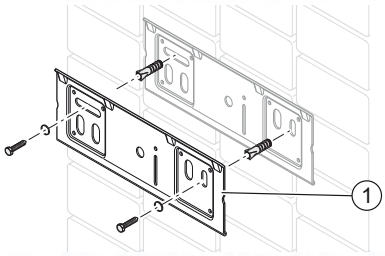

1 Hanging bracket

► Lifting the product into position, lean the top of the product slightly to the wall and position just above the hanging bracket.

► Lower the product slowly and engage onto the hanging bracket.

► The product is for internal installation only.

4.3 Hydraulic installation

Caution!
Risk of damage caused by contaminated lines!
Foreign bodies such as welding remnants, sealing residue or dirt in the supply lines can cause damage to the product.
► Flush the supply lines thoroughly before installation.

Caution!
Risk of damage caused by heat transfer when soldering.
Heat that is transferred during soldering can cause damage (expanded) polypropylene around electrical modul and to the seals in the service valves.

► Protect (expanded) polypropylene of electrical modul
► Do not solder the connection pieces if the connection pieces are screwed to the service valves.

Caution!
Risk of damage due to corrosion.
If plastic pipes that pass oxygen are used in the heating installation, this may corrode or sludge up the appliance's heating circuit or the appliance itself.

► If you use plastic pipes that pass oxygen in the heating installation, add a corrosion inhibitor to the circuit water.

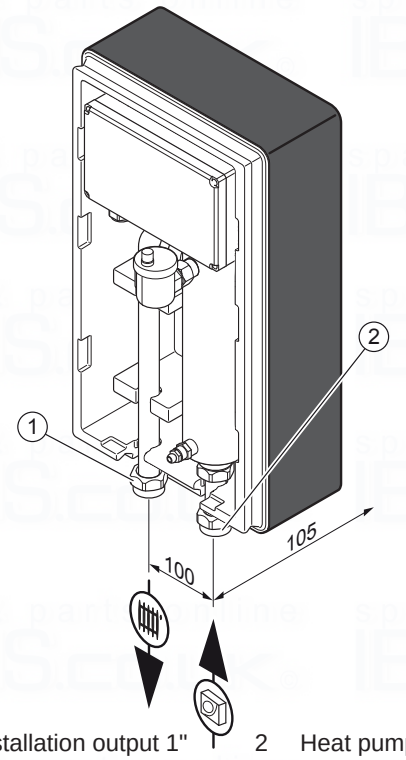

1 Installation output 1" 2 Heat pump input 1"

► Only use the original seals supplied with the appliance.

► Connect the heating circuit as specified.

4.4 Electrical Installation

Notes
The electrical power cable is not supplied with the appliance.

Danger!
Risk of electric shock due to an improper electrical connection!
Improper electrical connection can cause electric shock or might negatively affect the operational safety of the product and might cause material damage.

► The electrical connection of the product must be carried out only by a suitably qualified person.

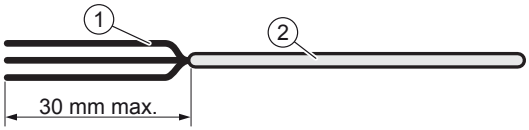

1 Electrical wires 2 Insulation

When you connect the electrical wires to a connector on the electronic board:

► Keep a distance of a maximum of 30 mm between connector and the start of the insulation.

► If using single core wires are used ensure that they are wrapped together in an insulating sheath.

► Fix the cables in the cable-clamp on the Box.

4.4.1 Connecting the power input (mains connection)

The external wiring to be grounded. The polarity must be correct and consistent with the standards.

► Connect the appliance in accordance with the live and neutral connections.

The connecting cables between the electrical panel and the appliance must be :
- adapted to a fixed installation,
- Electrical wires with adapated section linked to the power of the appliance.

► Connect the device to the electrical panel via an independent protection system (circuit breaker with a separation of at least 3 mm between each contact).

Additional protection may be required during the installation to ensure overvoltage category II.

Switching devices from the mains supply must allow complete failure of the supply according to the requirements of the overvoltage category III.

Component		Supply voltage (mini section of cable)
Mono supply cable	6 kW	230 V (3 x 4 mm²)
	4 kW	230 V (3 x 2,5 mm²)

3-phase supply cable	400 V (5 x 1,5 mm²)
Heating element relay cable	230 V (3 x 0,75 mm²)

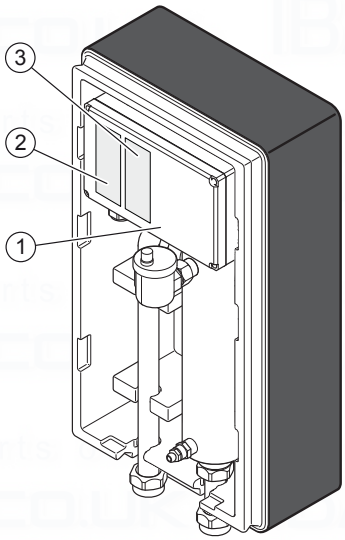

1 Electrical casing
2 230 V electrical connection label
3 400 V electrical connection label

Caution!
Risk of damage from too great voltage.
At mains voltages higher than 253 V, electronic components may be destroyed.
► Make sure that the rated voltage of the mains is 230 V.

Caution!
Risk of damage from too great voltage.
At mains voltages higher than 400 V, electronic components may be destroyed.
► Make sure that the rated voltage of the mains is 400 V.

► Connect alimentation cables of product on the electrical panel of installation.

4.4.1.1 Method of collection of electrical cables

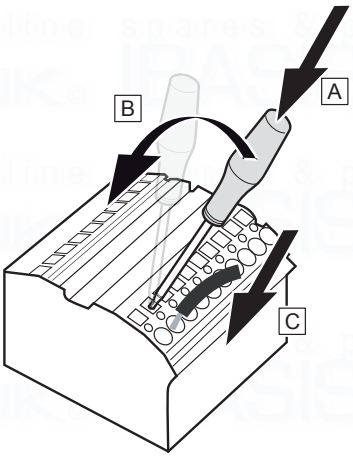

4.4.1.2 230 V connection - Cable routing 6 kW

Caution!
► Comply with the instructions on the label affixed inside the electrical casing.

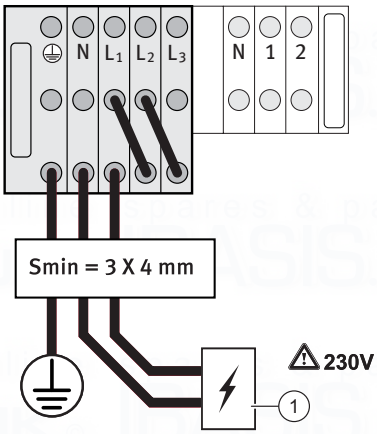

1 Protection mini. 30A

4.4.1.3 230 V connection - Cable routing 4 kW

Caution!
► Comply with the instructions on the label affixed inside the electrical casing.

Caution!
► For 230V connection, you must remove the shunts between L2 and L3.

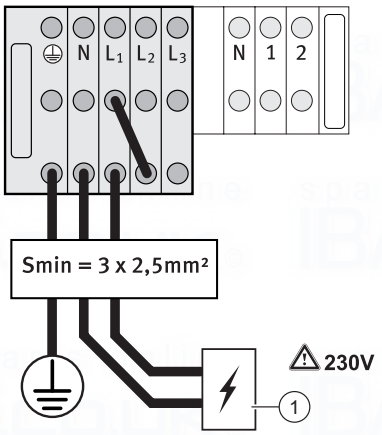

1 Protection mini. 20A

4.4.1.4 400 V connection

Caution!

► Comply with the instructions on the label affixed inside the electrical casing.

Caution!

► For 400V connection, you must remove the shunts.

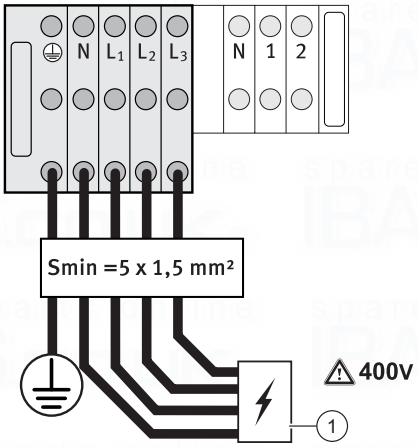

1 Protection mini. 10A

4.4.2 Command relay connection

4.4.2.1 With 2 kW electrical booster

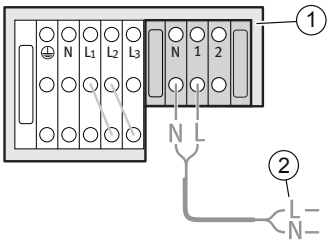

4.4.2.2 With 4 kW electrical booster

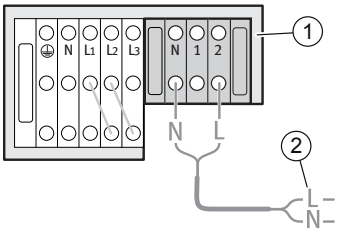

4.4.2.3 With 6 kW electrical booster

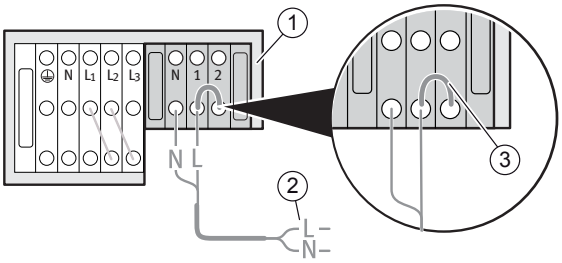

4.4.2.4 With multi-stage booster

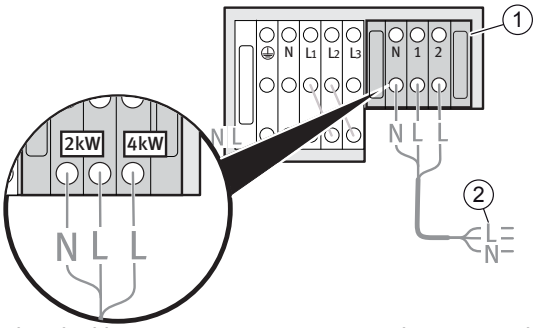

1 Electrical booster module

2 Towards command relay

3 Electrical shunt

4.5 Cableway and passage

Notes

The cables must pass through the openings provided for this purpose.

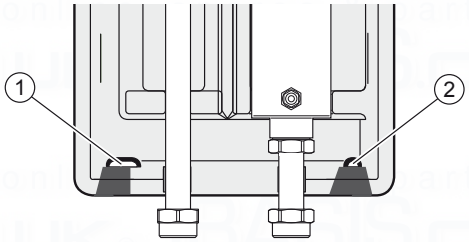

1 Passage for power cables and relay command cables

2 Temperature probe cable passage

Caution!
Risk of material damage

- ► Comply with electrical cable routing
- ► Avoid any contact with hot parts (heating coil).
- ► Keep a distance of 10mm between connecting cables and metallic elements that are a heat source.
- ► To guarantee the minimum tension at the cables, the screwed connections on the power supply cable and the relay control cable must be tightened sufficiently. Strain relief: 100N (10kg)

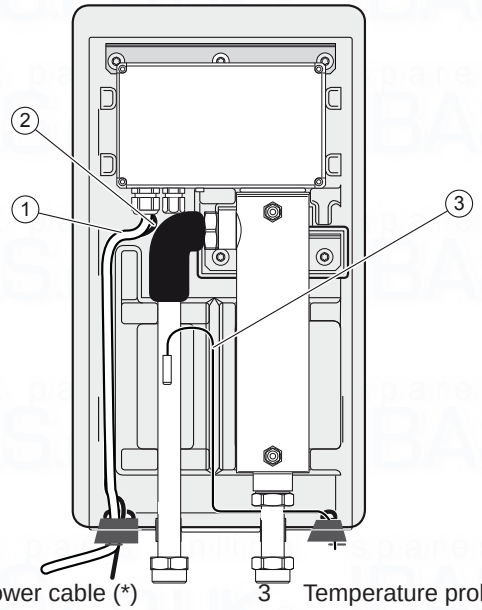

1 Power cable (*)

2 Relay command cable (*)

3 Temperature probe cable (Sensor included no mounting)

(*) Not included

Notes
The temperature probe must be assembled using thermal paste for good heat transfer.

5 Start up

- ► For filling, refer to the installation instructions of the heat pump.
- ► Check the electrical and water installation.
- ► Check all connections for leaks..
- ► Fill the heating installation.
- ► Purge your heating system.
- ► Replace the power.

Danger!
Risk of death from electric shock!

- ► Before carrying out the following work, ensure that the product has been disconnected from the power supply.

5.1 Purging the appliance

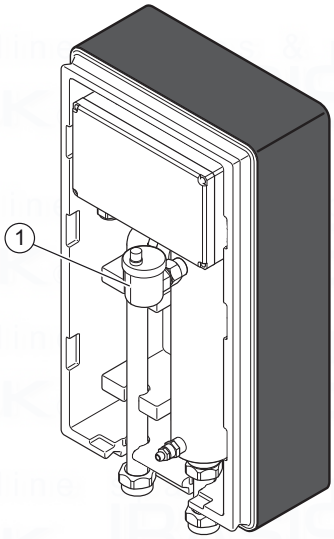

1 Air vent

- ► Open the air vent (1), when filling the heating circuit with water.

Caution!
Risk of damage in case of bad purge!
If air purging is not done properly, this may cause damage to the electrical heating element.

- ► Make sure the heating circuit is properly purged air.

Caution!
Risk of material damage

- ► When purging the air from the resistance, avoid all risk of water projection onto the electrical components.

5.2 Installing the casing

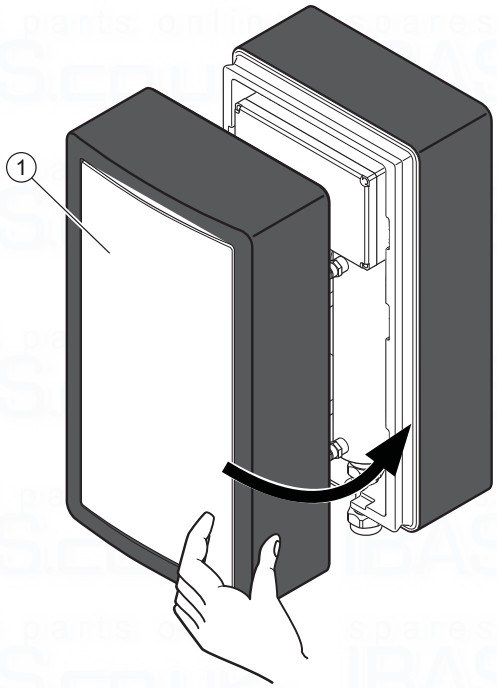

1 Front casing

► Put the front casing back on

5.3 Handing over the product to the user

After completing the installation:

► Answer any questions the user may have.

► Draw special attention to the safety instructions which the user must follow.

6 Repair work

Danger!
Risk of death from electric shock!
Touching live connections may cause serious personal injury.
► Switch off the electrical supply during the maintenance operation.

6.1 Spare parts

► In case you need spare parts during maintenance or repair, exclusively use genuine Vaillant spare parts.

The genuine component parts of the product have been certified together with the product in the course of the CE conformity check. If you do not use certified genuine Vaillant spare parts during maintenance or repair, the CE conformity of the product will expire. That is why we imperatively recommend to install genuine Vaillant spare parts.

6.2 Draining the product

Caution!
Risk of material damage
► Avoid all risk of water projection onto the electrical components.

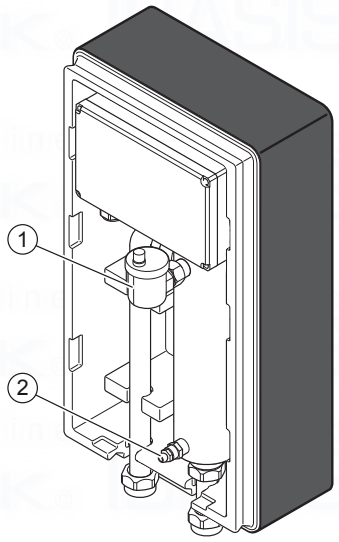

1 Air vent 2 Drainage plug

► Open the appliance's drainage plug (2).

► Open the appliance's air vent (1).

6.3 Resetting the Electrical back-up heater

Caution!
Risk of material damage
► For this measure, an advance check is required and this must only be carried out by a competent person.

In case of an abnormal increase in water temperature, the heating element's safety thermostat may be triggered (Refer to the installation manual control box).

It has to be reset manually.

Notes
Let the heating element cool before resetting.

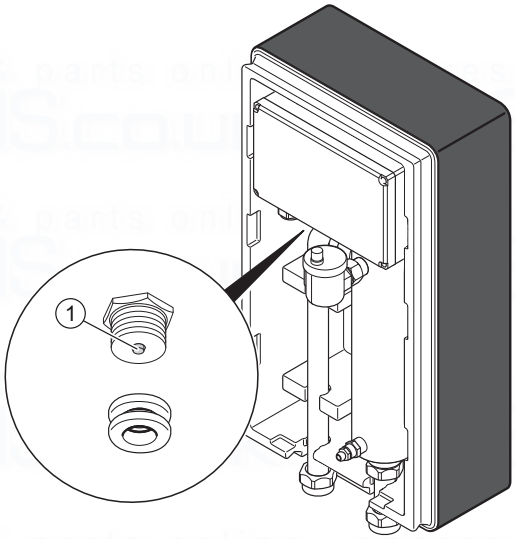

1 Reset button

► Press the reset button (1).

6.4 Checking tightness

► Check the water-tightness of the system.

6.5 Checking the electrical installation

► Check the electrical installation observing all relevant regulations.

6.5.2.1 Checking the cables

► If the power cable of this product is damaged, then to prevent danger, only the manufacturer, the after-sales service or similarly qualified persons shall replace the power cable.

► When replacing the power cable see chapter 4.4 and 4.5.

7 Decommissioning

► Isolate the product from the power mains.

► Drain the appliance (see chapter 6.2).

► De-install the product.

► Recycle or dispose the product and its components (see chapter 8).

8 Recycling and disposal

► The competent person who installed your product is responsible for the disposal of the packaging.

If the product is identified with this symbol:

► In this case, do not dispose of the product with household waste.

► Instead, hand in the product to a collection centre for old electrical or electronic appliances.

If the product contains batteries that are marked with this symbol, these batteries may contain substances that are hazardous to human health and the environment.

► In this case, dispose of the batteries at a collection point for batteries.

9 Technical data

Description	Unit			
Net Weight	kg	4		
Central heating maximum hydraulic pressure (PS_H max)	bar	3.0		
	Mpa	0.3		
Central heating minimum hydraulic pressure (PS_H min)	bar	0.5		
	Mpa	0.05		
Electrical				
Voltage / frequency	V~/Hz	230/50	230/50	400/50
Maximum absorbed power (P max)	kW	6	4	6
Maximum Current (I max)	A	30	20	10
Index of electrical protection		IP X4		

spares & parts online
IBASIS.CO.UK

0020152779_05 ▮ 23.10.2014

Supplier

Vaillant Ltd
Nottingham Road ▮ Belper ▮ Derbyshire ▮ DE56 1JT
Telephone 0330 100 3461
Vaillant Service Solutions 0330 100 3461
Spares Technical Enquiries 017 73 59 66 15
info@vaillant.co.uk ▮ Spares Technical Enquiries technicalspares@groupservice.co.uk
www.vaillant.co.uk

Manufacturer

Vaillant GmbH
Berghauser Str.40 ▮ D-42859 Remscheid
Telefon 021 91 18-0 ▮ Telefax 021 91 18-28 10
info@vaillant.de ▮ www.vaillant.de

© These instructions, or parts thereof, are protected by copyright and may be reproduced or distributed only with the manufacturer's written consent.