For the competent person

Installation and maintenance instructions

flexoTHERM exclusive

VWF 57/4 230 V

VWF 87/4 230 V

VWF 117/4 230 V

GB

Publisher/manufacturer
Vaillant GmbH
Berghauser Str. 40 ▮ D-42859 Remscheid
Tel. +49 21 91 18-0 ▮ Fax +49 21 91 18-28 10
info@vaillant.de ▮ www.vaillant.de

spares & parts online IBASIS.CO.UK

Contents

1 Safety ... 4
1.1 Action-related warnings ... 4
1.2 Intended use ... 4
1.3 General safety information ... 4
1.4 Regulations (directives, laws, standards) ... 6
2 Notes on the documentation ... 7
2.1 Observing other applicable documents ... 7
2.2 Storing documents ... 7
2.3 Applicability of the instructions ... 7
3 System overview ... 7
3.1 Heat pump system design ... 7
3.2 Functionality ... 8
3.3 Safety devices ... 9
4 Product description ... 10
4.1 Product design ... 10
4.2 Information on the identification plate ... 10
4.3 Explanation of product stickers ... 11
4.4 Type designation and serial number ... 11
4.5 CE label ... 11
4.6 Benchmark ... 11
5 Installation ... 12
5.1 Checking the scope of delivery ... 12
5.2 Selecting the installation site ... 12
5.3 Dimensions ... 13
5.4 Minimum clearances ... 14
5.5 Transporting the heat pump ... 14
5.6 Installing the product ... 15
5.7 Removing carrying handles ... 15
5.8 Removing the front casing ... 15
5.9 Removing the casing top and side casings ... 16
5.10 Removing the refrigeration circuit cover ... 16
6 Carrying out the hydraulics installation ... 17
6.1 Requirements for the heating circuit ... 17
6.2 Connecting the heat pump to the heating circuit ... 17
6.3 Connecting the heat pump to the brine circuit ... 17
6.4 Hydraulic wiring in the system ... 18
7 Filling and purging the system ... 18
7.1 Filling and purging the heating circuit ... 18
7.2 Filling and purging the brine circuit ... 19
8 Electrical installation ... 21
8.1 Routing eBUS lines ... 21
8.2 Opening the electronics box ... 21
8.3 Switch box ... 22
8.4 Establishing the power supply ... 22
8.5 Mains connection PCB ... 24
8.6 Controller PCB ... 26
8.7 Connecting the system controller and accessories to the electronics system ... 28
8.8 Carrying out the wiring ... 28
8.9 Installing the VRC DCF ... 28
8.10 Installing optional accessories ... 28
8.11 Checking the electrical installation ... 28
8.12 Completing installation ... 28
9 Start-up ... 29
9.1 Operating concept ... 29
9.2 Starting up the heat pump ... 29
9.3 Running the installation assistants ... 29
9.4 Calling up the installer level ... 30
9.5 Heating mode flow temperature regulation ... 30
9.6 Calling up statistics ... 30
9.7 Checking that the product works correctly ... 30
10 Adapting the unit to the heating installation ... 30
10.1 Setting parameters ... 30
10.2 Setting the high-efficiency pumps ... 30
10.3 Setting the flow temperature in heating mode (with no controller connected) ... 32
10.4 Setting the flow temperature in cooling mode (with no controller connected) ... 32
10.5 Handing the product over to the operator ... 32
11 Troubleshooting ... 32
11.1 Displaying the Live Monitor (current product status) ... 32
11.2 Checking fault codes ... 33
11.3 Querying the fault memory ... 33
11.4 Resetting the fault memory ... 33
11.5 Restarting the installation assistant ... 33
11.6 Using check programmes ... 33
11.7 Carrying out the actuator test ... 33
11.8 Auxiliary electric heater circuit breaker ... 33
12 Inspection and maintenance ... 33
12.1 Inspection and maintenance information ... 33
12.2 Procuring spare parts ... 33
12.3 Inspection and maintenance check-list ... 34
12.4 Checking and correcting the filling pressure of the heating installation ... 34
12.5 Checking and correcting the filling pressure in the brine circuit ... 34
12.6 Carrying out a restart and test operation ... 34
13 Decommissioning ... 34
13.1 Temporarily decommissioning the product ... 34
13.2 Decommissioning the product ... 34
14 Recycling and disposal ... 34
14.1 Disposing of the brine fluid ... 35
14.2 Arranging disposal of coolant ... 35
15 Customer service ... 35
Appendix ... 36
A Power supply 1~/N/PE 230 V (connection diagram 1 = ⚡1) ... 36
B Power supply 3~/PE 230 V (connection diagram 2 = ⚡2) ... 36
C Installer level overview ... 37
D Status codes – Overview ... 41
E Fault codes ... 43

F Characteristic values for the VR 10 external temperature sensor 48
G Characteristic values for internal temperature sensors 49
H Characteristic values for the VRC DCF outdoor temperature sensor..... 50
I Heat pump schematic..... 51
J Commissioning Checklist..... 53
K Commissioning Checklist..... 56
L Technical data..... 59
L.1 General 59
L.2 Brine heat source..... 61
L.3 Groundwater heat source 63
M Measuring currents = I_n 65

1 Safety

1.1 Action-related warnings

Classification of action-related warnings

The action-related warnings are classified in accordance with the severity of the possible danger using the following warning signs and signal words:

Warning symbols and signal words

Danger!
Imminent danger to life or risk of severe personal injury

Danger!
Risk of death from electric shock

Warning.
Risk of minor personal injury

Caution.
Risk of material or environmental damage

1.2 Intended use

There is a risk of injury or death to the user or others, or of damage to the product and other property in the event of improper use or use for which it is not intended.

The system is intended exclusively for domestic use.

The system is intended as a heat generator with cooling function for closed heating installations and for hot water generation. Operation of the pump outside the application limits results in the heat pump being switched off by the internal control and safety devices.

Cooling mode with radiator heating systems is not permitted since radiators do not have an adequate heat transfer surface area.

Intended use includes the following:

- observance of accompanying operating, installation and servicing instructions for the product and any other system components
- installing and fitting the product in accordance with the product and system approval
- compliance with all inspection and maintenance conditions listed in the instructions.

Intended use also covers installation in accordance with the IP class.

Any other use that is not specified in these instructions, or use beyond that specified in this document shall be considered improper use. Any direct commercial or industrial use is also deemed to be improper.

Caution.

Improper use of any kind is prohibited.

1.3 General safety information

1.3.1 Risk caused by inadequate qualifications

The following work must only be carried out by competent persons who are sufficiently qualified to do so:

- Installation
- Disassembly
- Installation
- Start-up
- Maintenance
- Repair
- Decommissioning

- ▸ Observe all instructions that are included with the product.
- ▸ Proceed in accordance with the current state of technology.
- ▸ Observe all applicable directives, standards, laws and other regulations.

1.3.2 Risk of injury during transport due to a high product weight.

- ▸ Make sure that the product is transported by at least two people.

1.3.3 Risk of death due to lack of safety devices

The schematic drawings included in this document do not show all safety devices required for correct installation.

- ▸ Install the necessary safety devices in the system.
- ▸ Observe the applicable national and international laws, standards and guidelines.

1.3.4 Risk of material damage caused by frost

- Do not install the product in rooms prone to frost.

1.3.5 Risk of death from electric shock

There is a risk of death from electric shock if you touch live components.

Before commencing work on the product:

- Disconnect the product from the power supply by switching off all power supplies (electrical partition with a contact opening of at least 3 mm, e.g. fuse or line protection switch).
- Secure against being switched back on again.
- Wait for at least 3 minutes until the capacitors have discharged.
- Check that there is no voltage.

1.3.6 Risk of injury due to chemical burns caused by brine fluid

The brine fluid ethylene glycol is harmful to health.

- Avoid contact with the skin and eyes.
- Always wear gloves and protective goggles.
- Do not inhale or swallow.
- Observe the safety data sheet that accompanies the brine fluid.

1.3.7 Risk of burns due to hot and cold components

There is a risk of burns from any uninsulated pipelines and from the auxiliary electric heating.

- Only carry out work on the components once they have reached ambient temperature.

1.3.8 Material damage due to unsuitable installation surface

The installation surface must be even and have sufficient load-bearing capacity to support the operating weight of the product. An uneven installation surface may cause leaks in the product.

If the installation surface does not have sufficient load-bearing capacity, the product may topple.

There is a risk of death if the connections are subject to leaks.

- Make sure that the product is positioned flush against the installation surface.
- Ensure that the installation surface has sufficient load-bearing capacity to bear the operating weight of the product.

1.3.9 Danger due to malfunctions

Ensure that the heating installation is in a technically perfect condition.

- Ensure that no safety or monitoring devices have been removed, bridged or disabled.
- Immediately rectify any faults and damage that may affect safety.
- Install the controller in a location where it is not covered by furniture, curtains, or other objects.
- If thermostatic control is activated, advise the operator that, in the room where the controller is mounted, all the radiator valves must be fully open.
- Do not use the units' free terminals as supporting terminals for other wiring.
- At lengths of over 10 m, 230 V supply lines must be laid separately from sensor or bus lines.

1.3.10 Preventing the risk of injury from freezing as a result of touching coolant

The product is supplied with an operational filling of R 410 A refrigerant. Escaping coolant may cause freezing if the exit point is touched.

- If coolant escapes, do not touch any components of the product.
- Do not inhale any vapours or gases that escape from the refrigerant circuit as a result of leaks.
- Avoid skin or eye contact with the coolant.
- In the event of skin or eye contact with the coolant, seek medical advice.

1.3.11 Risk of material damage caused by using an unsuitable tool

- Use the correct tool to tighten or loosen screw connections.

1.3.12 Risk of material damage caused by condensate inside the house

In heating mode, the lines between the heat pump and the heat source (environment circuit) are cold, which means that condensate may form on the lines in the house. In cooling mode, the building circuit lines are cold, which means that condensate may also form if the temperature falls below the dew point. Condensate may lead to material damage, for example due to corrosion.

- Ensure that you do not damage the heat insulation on the lines.

1.3.13 Avoid environmental damage caused by escaping coolant

The product contains R 410 A refrigerant. The coolant must not be allowed to escape into the atmosphere. R410A is a fluorinated greenhouse gas covered by the Kyoto Protocol, with a GWP of 2088 (GWP = global warming potential). If this gas escapes into the atmosphere, its impact is 2088 times greater than the natural greenhouse gas CO_2.

Before the product is disposed of, the coolant that is contained in it must be completely drained into a suitable vessel so that it can then be recycled or disposed of in accordance with regulations.

- Ensure that only officially certified competent persons with appropriate protective equipment carry out maintenance work on the refrigerant circuit or access it.
- Arrange for the refrigerant that is contained in the product to be recycled or disposed of by a certified competent person in accordance with the regulations.

1.4 Regulations (directives, laws, standards)

- Observe the national regulations, standards, guidelines and laws.

2 Notes on the documentation

2.1 Observing other applicable documents

► You must observe all the operating and installation instructions included with the system components.

2.2 Storing documents

► Pass these instructions and all other applicable documents on to the system operator.

2.3 Applicability of the instructions

These instructions apply only to:

Product
VWF 57/4 230V
VWF 87/4 230V
VWF 117/4 230V

3 System overview

3.1 Heat pump system design

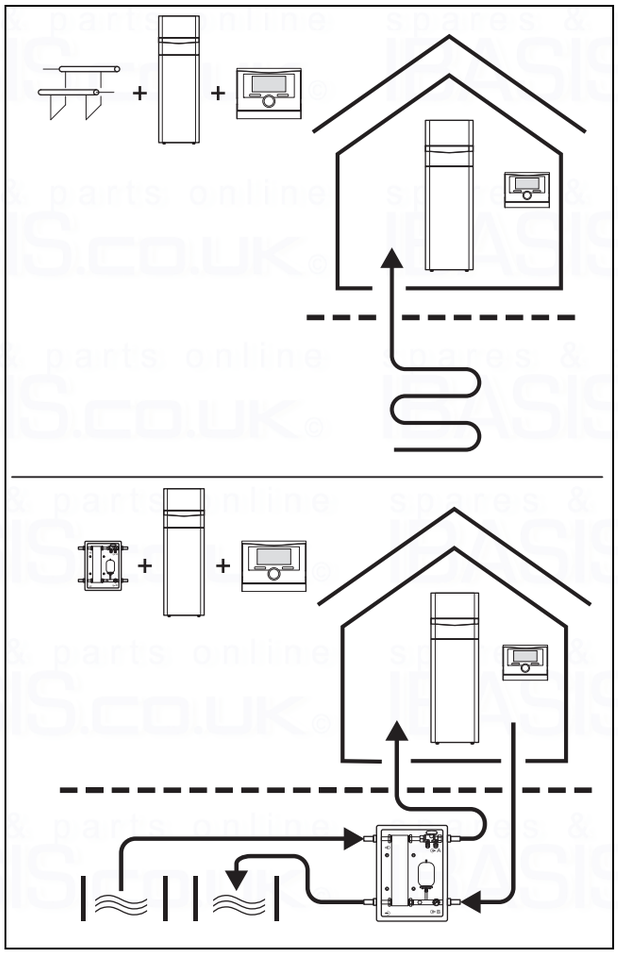

The heat pump system consists of the following components:

– Heat pump
– System controller (from VRC 700)
– Outside temperature sensor with DCF receiver
– System sensor, if required
– With ground heat source: Ground sensor
– With well water heat source: Groundwater module

The heat pump system generates heat for heating installations and in hot water generation by extracting the thermal energy from a heat source circuit and releasing this into the heating circuit via the internal refrigeration circuit. At the same time, there is an opportunity for active cooling to take place via circulation reversal. The heat pump can be connected to two different types of heat source. This includes geothermal energy and groundwater, whereby the heat source is connected to the heat pump via a transfer station connected between the two.

3.1.1 Heat pump

– Fulfils the heating demand of the system controller down to a minimum outside temperature and up to a maximum target flow temperature.
– Fulfils the cooling requirements of the system controller up to a maximum source temperature.
– Hot water generation with external domestic hot water cylinder

3.1.2 Groundwater module

– Heat transfer from the groundwater to the brine heat transfer medium in the heat pump.

3.1.3 Passive cooling module (optional)

– When using ground or groundwater as a heat source, the heat of the heating water is transferred to the heat source medium purely using circulation pumps and valve switching.

3.2 Functionality

3.2.1 Heat pump

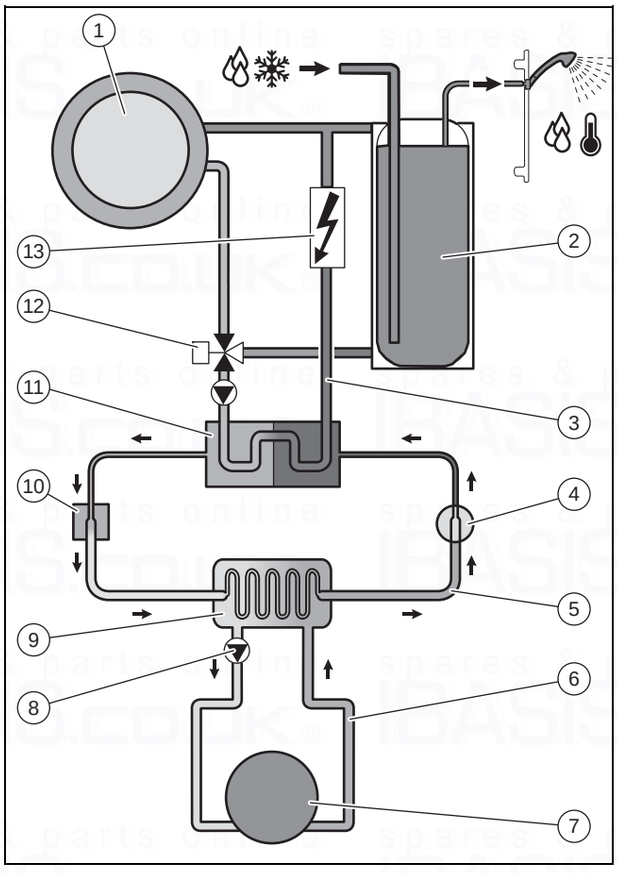

1	Heating installation	8	Brine pump
2	Domestic hot water cylinder (optional)	9	Evaporator
3	Heating circuit	10	Electronic expansion valve
4	Compressor	11	Condenser
5	Refrigeration circuit	12	Heating/cylinder charging diverter valve
6	Brine circuit	13	Auxiliary electric heating
7	Heat source		

The heat pump system uses geothermal energy or groundwater as the heat source.

The heat pump consists of the following separate circuits which are coupled with one another by means of heat exchangers. These circuits are:

- The brine circuit, which extracts the thermal energy from the ground or the groundwater and transfers it to the refrigeration circuit
- The refrigerant circuit, which is used to bring the thermal energy from the heat source to a usable, higher temperature level and deliver it to the heating circuit
- The heating circuit, which is used to heat up the living rooms

The coolant circuit is connected via the evaporator to the heat source, from which it extracts thermal energy. At the same time, the physical state of the coolant changes; it evaporates. The refrigerant circuit is connected via the condenser to the heating installation, to which it releases the thermal energy again. In so doing, the coolant becomes liquid again; it condenses.

As thermal energy can only pass from a body at a higher temperature to a body at a lower temperature, the coolant in the evaporator must have a lower temperature than the heat source. On the other hand, the temperature of the coolant in the condenser must be higher than that of the heating water in order to be able to release the thermal energy to it.

These different temperatures are produced in the coolant circuit by means of a compressor and an expansion valve, which are located between the evaporator and condenser. The coolant flows in vapour form from the evaporator into the compressor, where it is compressed. This causes the pressure and temperature of the coolant vapour to rise sharply. After this process, it flows through the condenser, where it releases its thermal energy to the heating water by condensation. It flows as a liquid into the expansion valve, where it expands significantly and, in so doing, loses much of its pressure and temperature. This temperature is now lower than that of the brine that flows through the evaporator. The coolant can thus absorb more thermal energy in the evaporator, turning into vapour in the process and flowing to the compressor. The cycle starts again.

The evaporator and parts of the refrigerant circuit inside the heat pump are cold-insulated, meaning that no condensate can accumulate. Any small amounts of condensate which may form evaporate as a result of the heat generated inside the heat pump.

The product is equipped with an active cooling function that you can use to maintain the temperature of your living rooms when the outside temperature is high during summer. Ground and groundwater are particularly good heat sources for this use. For this purpose, a 4-way diverter valve is integrated into the heat pump's refrigerant circuit. This uses the principle of active cooling, in which the refrigerant circuit is used to extract thermal energy from the heat recovery system (e.g. the underfloor heating) in order to deliver this to the heat source. For this, the 4-way diverter valve is used to hydraulically swap the heat exchange processes in the evaporator and condenser in the refrigerant circuit.

The heating water, which, when supplied, is colder in the flow than the room temperature, absorbs thermal energy from the rooms and is pumped by the heating pump to the condenser (which works as an evaporator when in cooling mode). This thermal energy is absorbed by the coolant and heated to a higher temperature level using the compressor. The thermal energy is then delivered to the brine in the evaporator (which works as a condenser when in cooling mode). The cooled coolant is guided to the expansion valve to enable thermal energy to be absorbed from the condenser again. The brine pump transports the hot brine into the earth, where the thermal energy is dissipated.

During the installation, it may be useful to exclude some rooms (e.g. the bathroom) from the cooling function and to actuate stop valves especially for this. The heat pump electronics system emits a signal that can be used for actuating these.

A passive cooling module is also available as an alternative, whereby thermal energy is transported via underfloor heating, for example, from the rooms to the ground without the compressor operating and therefore without the refrigerant circuit operating.

If required, the integrated auxiliary electric heating can be activated at different output levels via the heat pump display. The auxiliary electric heating is then actuated by the system controller.

3.2.2 Weather-controlled system controller

The heat pump system is equipped with a weather-controlled system controller that provides heating, cooling and hot water handling depending on the control type and controls this in automatic mode.

The controller changes the target flow temperature based on the outside temperature. The outside temperature is measured by a separate sensor which is mounted in the open air, and the results are transmitted to the controller. The room temperature depends only on the preset values. The system compensates for the effect of the outside temperature. Hot water generation is not affected by the weather compensation. The instructions for the system controller describe how to install and operate the product.

3.3 Safety devices

3.3.1 Frost protection function

The frost protection function for the system is controlled via the system controller. If the system controller fails, the heat pump guarantees limited frost protection for the heating circuit.

3.3.2 Protection against low heating water pressure

This function continuously monitors the pressure of the heating water in order to prevent a possible loss of heating water. If the water pressure falls below the minimum pressure, an analogue pressure sensor switches off the heat pump and switches the other modules, where these exist, to standby mode. It switches the heat pump on again if the water pressure reaches the operating pressure.

- Min. heating circuit pressure: ≥ 0.05 MPa (≥ 0.50 bar)
- Min. heating circuit operating pressure: ≥ 0.07 MPa (≥ 0.70 bar)

3.3.3 Brine loss protection system

The brine loss protection system continuously monitors the fluid pressure in the environment circuit in order to prevent a possible shortage of fluid. If the fluid pressure falls below the minimum pressure, an analogue pressure sensor switches off the heat pump and switches the other modules, where these exist, to standby mode. It switches the heat pump on again if the fluid pressure reaches the operating pressure.

- Minimum brine fluid pressure: ≥ 0.05 MPa (≥ 0.50 bar)
- Min. brine fluid operating pressure: ≥ 0.07 MPa (≥ 0.70 bar)

3.3.4 Freeze protection

This function prevents the evaporator from freezing when the heat source temperature drops below a certain value.

The outlet temperature of the heat source is constantly measured. If the outlet temperature of the heat source falls below a certain value, the compressor temporarily switches off and displays a status message. If this fault occurs three times in a row, it is switched off and a fault message is displayed.

3.3.5 Pump- and valve-blocking protection system

This function prevents the pumps for heating water and brine and all diverter valves from sticking. The pumps and the valves, which were out of operation for 23 hours, are switched on for 10 - 20 seconds, one after the other.

3.3.6 High-pressure pressure switch in the refrigeration circuit

The high-pressure pressure switch shuts down the heat pump if the pressure in the coolant circuit is too high. If the pressure in the heat pump's refrigeration circuit exceeds the maximum pressure, the high-pressure pressure switch temporarily shuts down the heat pump. Following a waiting period, another attempt is made to start the heat pump. After three failed start attempts in succession, a fault message is displayed.

- Refrigeration circuit pressure max.: 4.60 MPa (g) (46.00 bar (g))
- Waiting period: 5 minutes (after the first occurrence)
- Waiting period: 30 minutes (after the second and every further occurrence)

The fault counter is reset if both of the following conditions are met:

- Heat requirement without switching off prematurely
- 60 minutes of uninterrupted operation

3.3.7 Hot gas thermostat in the refrigeration circuit

The hot gas thermostat shuts down the heat pump if the temperature in the refrigeration circuit is too high. If the temperature in the heat pump's refrigeration circuit exceeds the maximum temperature, the hot gas thermostat temporarily shuts down the heat pump. Following a waiting period, another attempt is made to start the heat pump. After three failed start attempts in succession, a fault message is displayed.

- Max. refrigeration circuit temperature: 135 °C
- Waiting period: 5 minutes (after the first occurrence)
- Waiting period: 30 minutes (after the second and every further occurrence)

The fault counter is reset if both of the following conditions are met:

- Heat requirement without switching off prematurely
- 60 minutes of uninterrupted operation

3.3.8 Safety cut-out (SCO) in the heating circuit

If the temperature in the heating circuit of the internal auxiliary electric heating exceeds the maximum temperature, the SCO shuts down the auxiliary electric heating as a securing measure. Following a waiting period, another attempt is made to start the auxiliary electric heating. A fault message is displayed that can only be reset by pressing the Reset button or by switching the heat pump off and on again.

- Max. heating circuit temperature: 85 °C

4 Product description

4.1 Product design

4.1.1 Front view, open

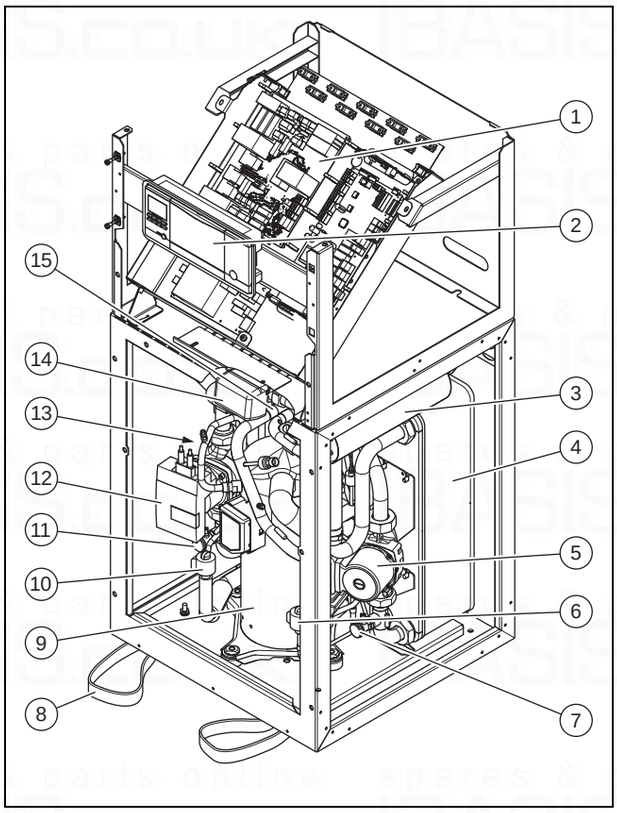

1	Switch box	8	Carrying handles for transport
2	Operator control panel	9	Compressor
3	Auxiliary electric heating	10	Electronic expansion valve
4	Condenser	11	Brine circuit filling and drainage tap
5	Heating pump	12	Brine circuit pump
6	Electronic expansion valve EVI (intermediate circuit injection)	13	Evaporator (not visible)
7	Heating circuit filling and drainage tap	14	Heating/cylinder charging diverter valve
		15	4-way valve

4.1.2 Rear view

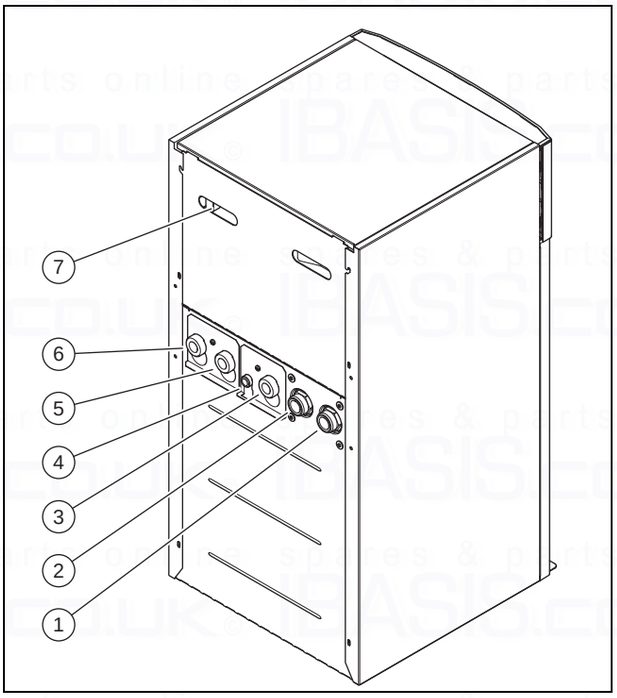

1	Connection: From the heat pump to the heat source (cold brine, B)	4	Heating circuit diaphragm expansion tank connection
2	Connection: From the heat source to the heat pump (hot brine, A)	5	Heating return
3	Hot water return	6	Heating flow
		7	Recessed handles and cable duct

4.2 Information on the identification plate

Information on the identification plate	Meaning
+ +	Rated voltage of the compressor, pumps and controller
	Auxiliary heater rated voltage
P Max + +	Max. rated power of the compressor, pumps and controller
P Max	Max. rated power of the auxiliary heater
I + 30 A + + +	Start-up current
	Coolant type, fill quantity, permissible rated overpressure
COP B0/W35 /W45 /W55	Output figure (coefficient of performance) at a brine temperature of 0 °C and heating flow temperature of 35/45/55 °C
B0/W35 /W45 /W55	Heating output at a brine temperature of 0 °C and heating flow temperature of 35/45/55 °C

Information on the identification plate	Meaning
COP W10/W35 /W45 /W55	Output figure (coefficient of performance) at a groundwater temperature of 10 °C and a heating flow temperature of 35/45/55 °C
W10/W35 /W45 /W55	Heating output at a groundwater temperature of 10 °C and a heating flow temperature of 35/45/55 °C
V	Mains voltage
Hz	Power frequency
W	Power consumption
IP	Protection class
	Information on disposal
xxxxxxyyyyyyyyyyzzzzzzzzzzzz	Barcode with serial number, 7th to 16th digits = product article number
	Read the instructions

4.3 Explanation of product stickers

Symbol on the sticker	Meaning
	Heating flow connection
	Heating return connection
	Heating diaphragm expansion tank connection
A	Connection from the heat source to the heat pump (hot brine)
B	Connection from the heat pump to the heat source (cold brine)
	Brine heat source
	Energy supply company anti-cycling time

4.4 Type designation and serial number

The type designation and serial number can be found on a plate behind the front flap and on the main identification plate. The 7th to 16th digits of the serial number form the article number.

4.5 CE label

The CE label shows that the products comply with the basic requirements of the applicable directives as stated on the identification plate.

The declaration of conformity can be viewed at the manufacturer's site.

4.6 Benchmark

Applicability: Great Britain

Vaillant is a licensed member of the Benchmark Scheme.

Benchmark places responsibilities on both manufacturers and installers. The purpose is to ensure that customers are provided with the correct equipment for their needs, that it is installed, commissioned and serviced in accordance with the manufacturer’s instructions by a competent person approved at the time by the Health and Safety Executive and that it meets the requirements of the appropriate Building Regulations. The Benchmark Checklist can be used to demonstrate compliance with Building Regulations and should be provided to the customer for future reference.

Installers are required to carry out installation, commissioning and servicing work in accordance with the Benchmark Code of Practice which is available from the Heating and Hotwater Industry Council who manage and promote the Scheme.

Benchmark is managed and promoted by the Heating and Hotwater Industry Council.

benchmark
COLLECTIVE MARK
THE MARK OF QUALITY FOR THE INSTALLATION, COMMISSIONING AND SERVICING OF DOMESTIC HEATING AND HOT WATER SYSTEMS

For more information visit www.centralheating.co.uk

5 Installation

5.1 Checking the scope of delivery

1. Carefully remove the packaging and padding without damaging the parts of the product.
2. Check that the scope of delivery is complete.

Quantity	Description
1	Heat pump
1	Installation set comprising – 3 x flat seal (yellow/green) for heating circuit – 1 x 3/4" flat seal for the heating expansion vessel connection – 2 x O-ring seals for brine circuit
1	Expansion relief valve for brine circuit, 1/2", 3 bar
1	Enclosed documentation

5.2 Selecting the installation site

- Select a dry room that is frost-proof throughout and in which the permissible ambient temperature is neither above nor below the permitted range.
  - Permissible ambient temperature: 7 … 25 °C
  - Permissible relative air humidity: 40 … 75 %
- Ensure that the installation room has the required minimum volume.

Heat pump	R 410 A refrigerant filling volume	Minimum installation room volume
VWF 57/4 230V	1.50 kg	3.41 m³
VWF 87/4 230V	2.40 kg	5.45 m³
VWF 117/4 230V	2.50 kg	5.68 m³

- Ensure that the required minimum clearances can be maintained.
- When selecting the installation site, you must take into consideration that when the heat pump is in operation, it will transfer vibrations to the floor and the nearby walls.
- Ensure that the floor is level and has sufficient load-bearing capacity to bear the weight of the heat pump and a domestic hot water cylinder.
- Ensure that cables can be easily routed (for brine, hot water and heating).

5.3 Dimensions

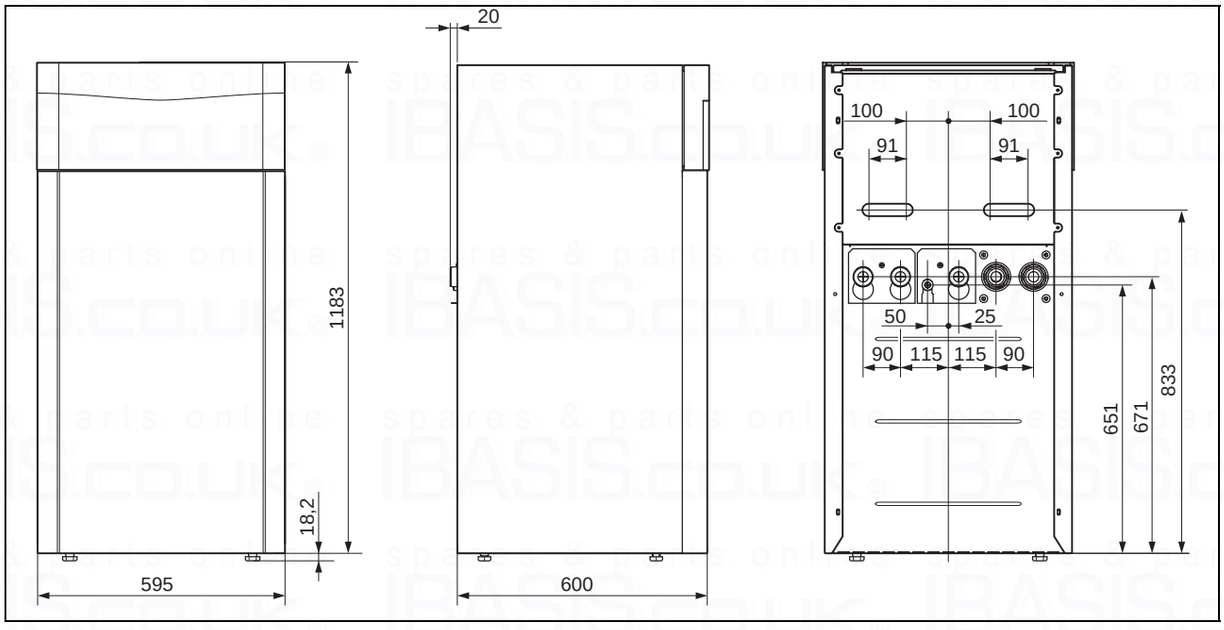

5.4 Minimum clearances

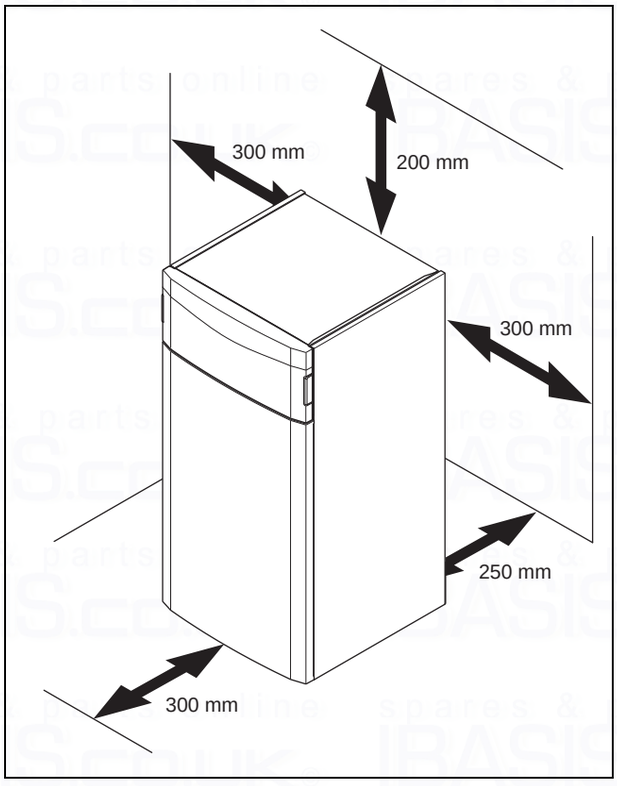

► Comply with the minimum clearances specified above in order to facilitate maintenance work.

5.5 Transporting the heat pump

Caution.
Risk of damage due to improper transportation.

Regardless of the mode of transport, the heat pump must never be tilted by more than 45°. Otherwise, this may lead to malfunctions in the coolant circuit during subsequent operation. In the worst case scenario, this may lead to a fault in the whole system.

► During transport, do not tilt the heat pump by any more than the maximum angle of 45°.

► Transport the product to the installation site. Use the recessed handles on the rear and the retractable straps at the front on the underside of the product as an aid.
► Transport the product using a suitable sack truck. Only position the sack truck at the rear so that the weight distribution is as even as possible. Secure the product using a retaining strap.
► Use a ramp to move the product from the pallet using the sack truck, e.g. a piece of square timber and a sturdy board.

5.5.1 Using carrying handles

1. Remove the front casing. (→ Page 15)

Danger!
Risk of injury due to repeated use of the carrying handles.

Due to material ageing, the carrying handles are not designed to be reused during any subsequent transportation.

► Once the product has been started up, cut off the carrying handles.

Danger!
Risk of injury when transporting due to the carrying handles breaking away.

The carrying handles may break away during transport if the front casing is fitted.

► Remove the front casing before you use the carrying handles.

2. To transport the unit safely, use the two carrying handles on the two front feet of the product.

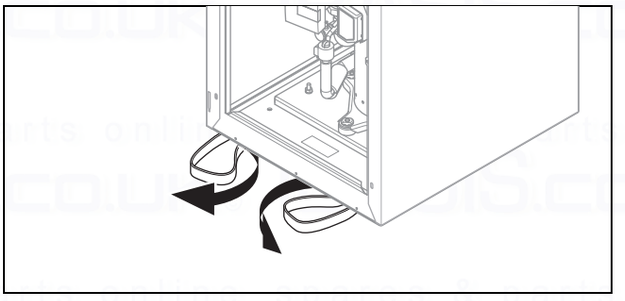

3. Turn the carrying handles under the product so that they face forwards.
4. Ensure that the feet are screwed in fully so that the carrying handles are held properly.

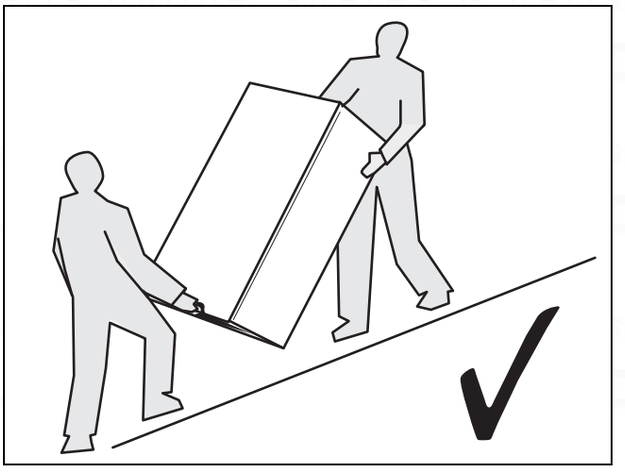

5. Always transport the product as illustrated above.

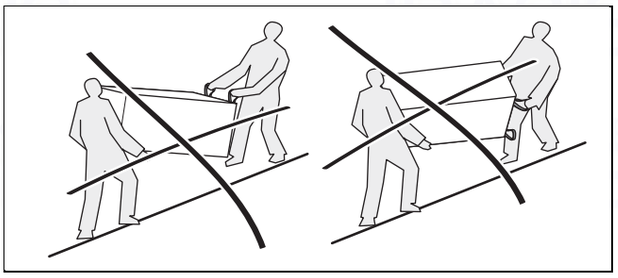

6. Never transport the product as illustrated above.

5.6 Installing the product

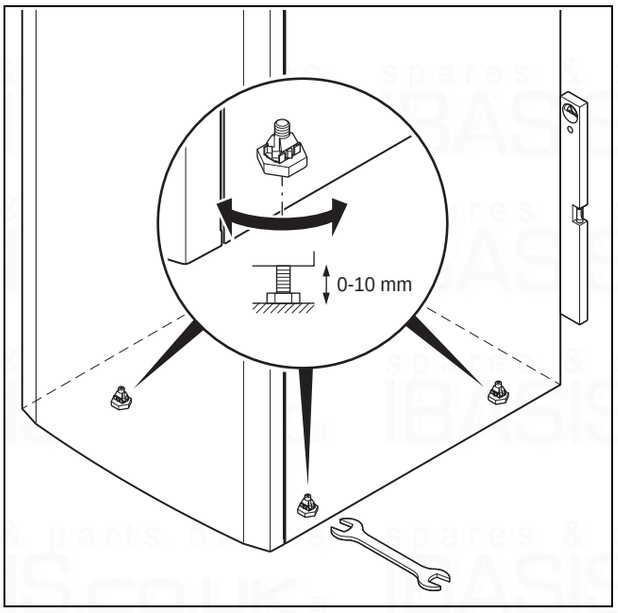

► Orientate the product horizontally by adjusting the adjustable feet.

5.7 Removing carrying handles

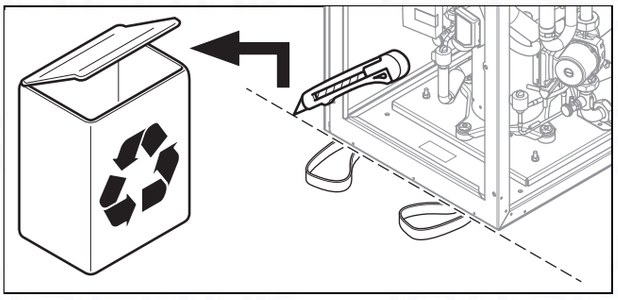

► Cut off the carrying handles and throw them away.

5.8 Removing the front casing

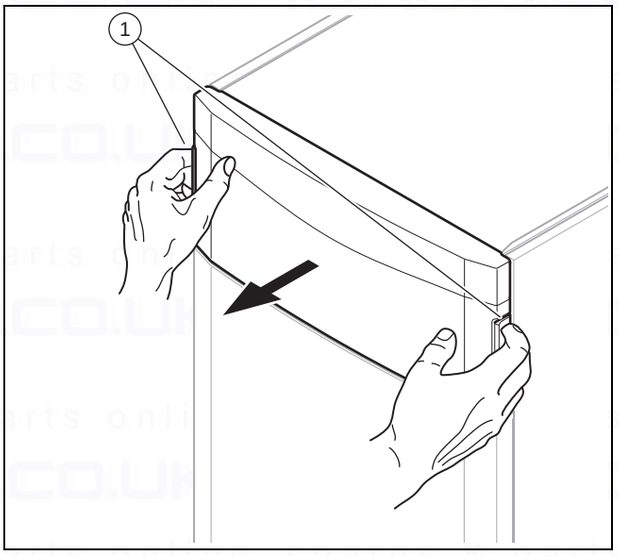

1. Remove the front flap on the operator control panel by taking hold of the recessed handles with both hands and lifting off the front flap towards you.

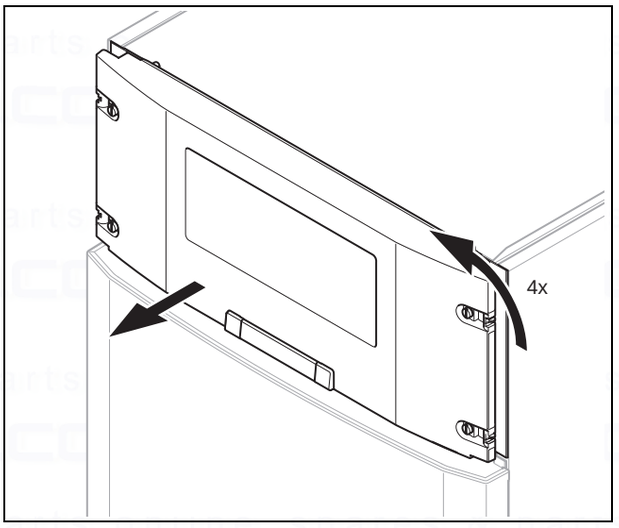

2. Turn the four screws by a quarter turn and lift off the cover on the operator control panel towards you.

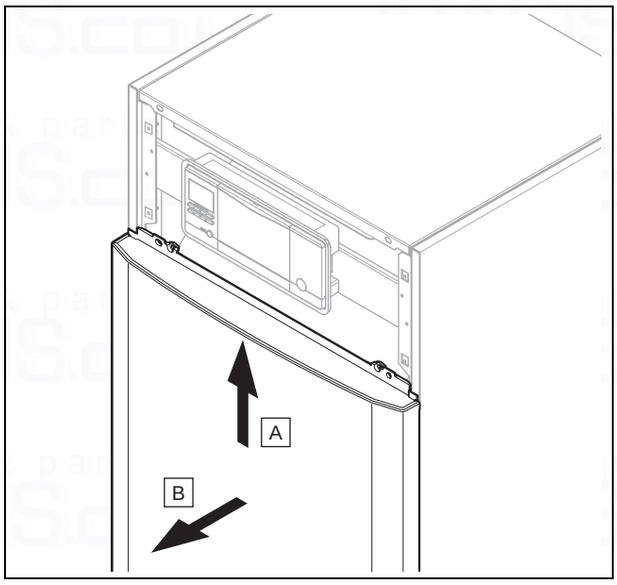

3. Pull each part of the front casing forwards slightly and remove it by lifting it upwards.

5.9 Removing the casing top and side casings

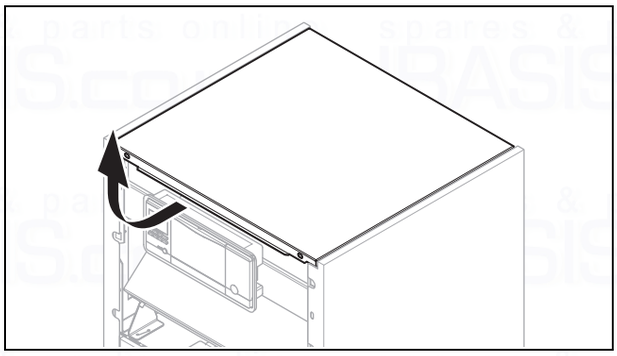

1. Pull the casing top forwards slightly and remove it by lifting it upwards.

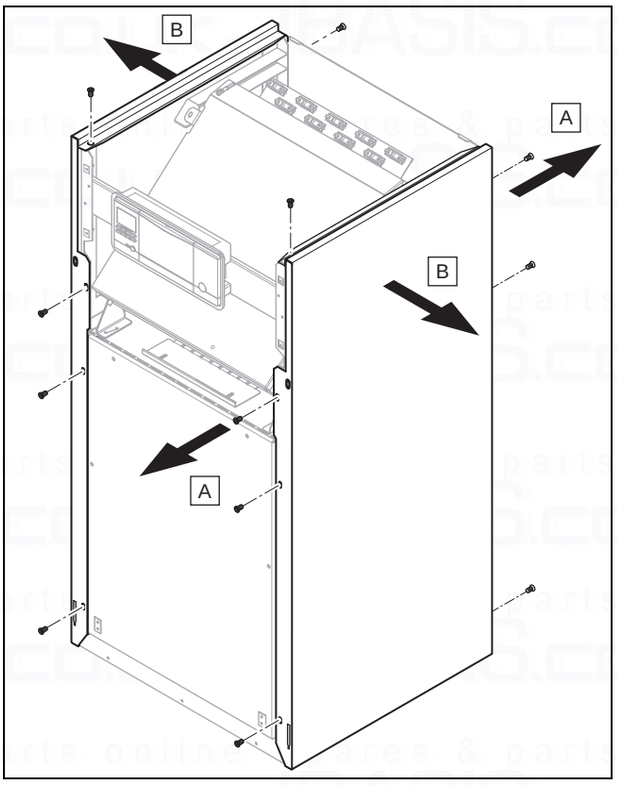

2. To remove a side casing, remove the four screws at the front and the three screws at the back.
3. Remove the side casing.

5.10 Removing the refrigeration circuit cover

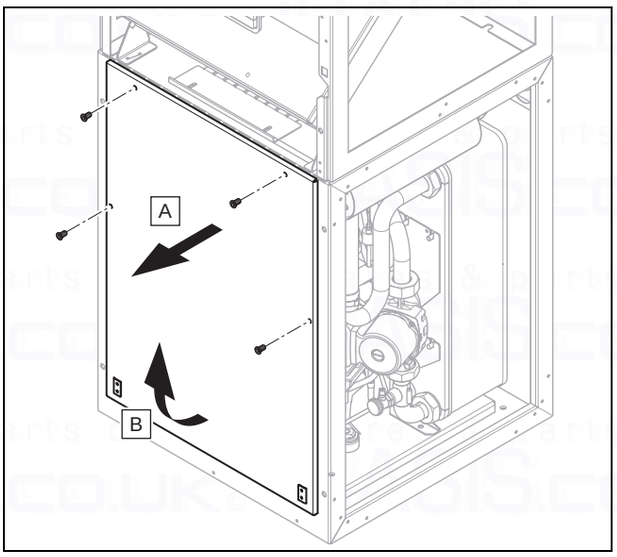

1. Remove the four screws.
2. Pull the top of the refrigeration circuit cover forwards and lift it out of the guide.

6 Carrying out the hydraulics installation

1. If you want to carry out active cooling using ground as the heat source, make sure that the borehole/ground sensor is suitable for this purpose and observe the national directives and laws. The use of ground collectors for active cooling is prohibited.
2. Flush the heating installation through thoroughly before connecting the heat pump in order to remove any residue which could be deposited in the heat pump and lead to damage.
3. Install the supply lines (disconnected from the power supply) in accordance with the dimension and connection drawings.
   - Position the pipe brackets for securing the heating circuit and brine circuit piping so that they are not too close to the heat pump in order to prevent noise transmission.
   - If required, instead of pipe brackets, use cold insulation clamps with additional rubber insulation and, in some cases, reinforced hoses (armoured rubber hoses).
   - To prevent excessive pressure losses, do not use stainless steel corrugated pipes.
   - If required, use horizontal or right-angled connection adaptors from the accessories.

Note
The heat pump's compressor has two-fold vibration insulation. This eliminates vibrations in the coolant circuit that are inherent in the system. However, under certain circumstances, residual vibrations may occur.

4. Attach automatic purging valves to the heating installation.

6.1 Requirements for the heating circuit

In heating installations that are equipped primarily with thermostatic or electrically controlled valves, a constant and sufficient flow through the heat pump must be ensured. Irrespective of which heating installation is selected, the minimum volume of circulating heating water (35% of the nominal flow; see the Technical data table) must be guaranteed.

6.2 Connecting the heat pump to the heating circuit

Caution.
Risk of damage from magnetite deposits.
In heating installations with steel pipes, static heating surfaces and/or buffer cylinder systems, magnetite may form where large volumes of water are involved.

- ► Insert a magnetite filter to protect the pump inside the product.
- ► You must position the filter in direct proximity to the return line to the heat pump.

1. Install a diaphragm expansion tank at the heat pump connection provided.
2. Install an expansion relief valve (at least DN 20, opening pressure of 3 bar) with pressure gauge.
3. Install the expansion relief valve hose in a frost-free environment and ensure that its routing ends in an open tundish where it is then visible.
4. Install an air/dust separator in the return of the heating circuit.
5. Connect the heating flow to the heating flow connection of the heat pump.
6. Connect the heating return to the heating return connection of the heat pump.
7. Insulate all of the pipes in the heating circuit and the connections for the heat pump so that they are vapour-diffusion-tight in order to prevent them from falling below the dew point in cooling mode.

6.3 Connecting the heat pump to the brine circuit

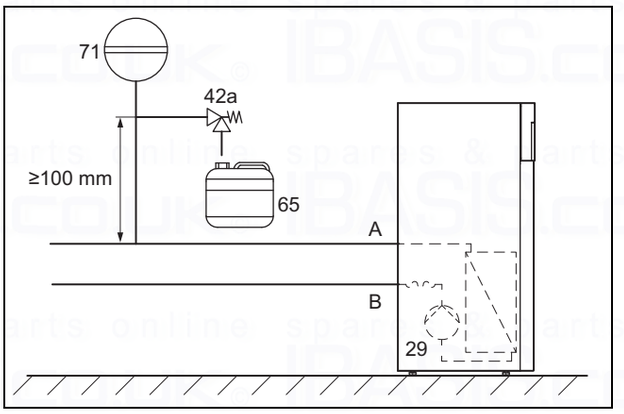

29	Brine pump	A	From the heat source to the heat pump (hot brine)
42a	Brine expansion relief valve	B	From the heat pump to the heat source (cold brine)
65	Brine collecting container		
71	Brine diaphragm expansion tank		

1. Remove the blind caps from the brine connections. These are no longer required and can be properly disposed of.
2. Connect the brine lines to the heat pump.
3. Insulate all of the brine lines and the connections of the heat pump so that they are vapour-diffusion-tight.

Note
Vaillant recommends that you install the Vaillant heat pump brine filling unit (not required when installing the groundwater module). By doing this, it is then possible to carry out a preparatory partial bleed of the brine circuit, e. g. the flow and return lines of the brine circuit to the product.

6.4 Hydraulic wiring in the system

6.4.1 Installing heating circuits with direct connection

1. Install the hydraulic components in accordance with the local requirements as shown in the system diagram example, → Installation instructions for the system.
2. Connect the underfloor heating circuits or heating circuit distributors directly to the heat pump.
3. Connect a limit thermostat to ensure that the heat pump's underfloor protection works correctly. (→ Page 22)
4. Ensure that a minimum volume of circulating water is guaranteed.
   – Minimum volume of circulating water: 35% of the nominal flow

6.4.2 Installing heating circuits with direct connection and domestic hot water cylinder

1. Install the heating circuits for direct operation. (→ Page 18)
2. Secure the temperature sensor (VR10), available from the range of accessories, in the domestic hot water cylinder and connect it to the heat pump.

7 Filling and purging the system

7.1 Filling and purging the heating circuit

7.1.1 Checking and treating the heating water/filling and supplementary water

Caution.
Risk of material damage due to poor-quality heating water

► Ensure that the heating water is of sufficient quality.

► Before filling or topping up the system, check the quality of the heating water.

Checking the quality of the heating water

► Remove a little water from the heating circuit.
► Check the appearance of the heating water.
► If you ascertain that it contains sedimentary materials, you must desludge the system.
► Use a magnetic rod to check whether it contains magnetite (iron oxide).
► If you ascertain that it contains magnetite, clean the system and apply suitable corrosion-protection measures, or fit a magnet filter.
► Check the pH value of the removed water at 25 °C.
► If the value is below 8.2 or above 10.0, clean the system and treat the heating water.
► Ensure that oxygen cannot get into the heating water.

Checking the filling and supplementary water

► Before filling the system, measure the hardness of the filling and supplementary water.

Treating the filling and supplementary water

► Observe all applicable national regulations and technical standards when treating the filling and supplementary water.

Provided the national regulations and technical standards do not stipulate more stringent requirements, the following applies:

You must treat the heating water in the following cases:

– If the entire filling and supplementary water quantity during the operating life of the system exceeds three times the nominal volume of the heating installation, or
– If the guideline values listed in the following table are not met, or
– If the pH value of the heating water is less than 8.2 or more than 10.0.

Applicability: Great Britain

Total heating output	Water hardness at specific system volume[1)]					
	≤ 20 l/kW		> 20 l/kW ≤ 50 l/kW		> 50 l/kW	
kW	ppm $CaCO_3$	mol/m³	ppm $CaCO_3$	mol/m³	ppm $CaCO_3$	mol/m³
< 50	< 300	< 3	200	2	2	0.02
> 50 to ≤ 200	200	2	150	1.5	2	0.02
> 200 to ≤ 600	150	1.5	2	0.02	2	0.02
> 600	2	0.02	2	0.02	2	0.02

1) Nominal capacity in litres/heating output; in the case of multi-boiler systems, the smallest single heating output is to be used.

Applicability: Great Britain

Caution.
Risk of material damage if the heating water is treated with unsuitable additives.

Unsuitable additives may cause changes in the components, noises in heating mode and possibly subsequent damage.

► Do not use any unsuitable frost and corrosion protection agents, biocides or sealants.

No incompatibility with our products has been detected to date with proper use of the following additives.

► When using additives, follow the manufacturer's instructions without exception.

We accept no liability for the compatibility of any additive or its effectiveness in the rest of the heating system.

Additives for cleaning measures (subsequent flushing required)

– Fernox F3
– Sentinel X 300
– Sentinel X 400

Additives intended to remain permanently in the system

– Fernox F1

– Fernox F2
– Sentinel X 100
– Sentinel X 200

Additives for frost protection intended to remain permanently in the system

– Fernox Antifreeze Alphi 11
– Sentinel X 500

► If you have used the above-mentioned additives, inform the operator about the measures that are required.
► Inform the operator about the measures required for frost protection.

7.1.2 Filling and purging the heating installation

1. Open all of the thermostatic radiator valves on the heating installation and, if required, all other stop valves.
2. Check all of the connections and the entire heating installation for leaks.

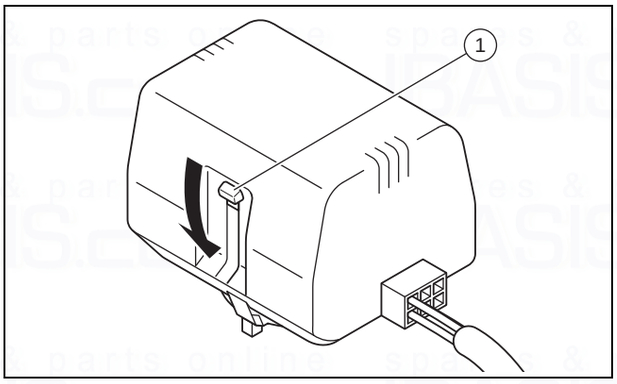

3. Push the white switching lever **(1)** on the motor head of the diverter valve until it engages in its mid-position in order to move the heating/cylinder charging diverter valve into the mid-position.
   ◁ Both valves are open and the filling procedure is improved since the air in the system can escape.
4. Connect a filling loop to the hot water supply.
5. Unscrew the screw cap from the heating circuit's filling and drain valve and secure the free end of the filling hose to here.
6. Open the filling and drain valve for the heating circuit.
7. Open the heating water supply slowly.
8. Fill with water until the pressure gauge (on-site) shows that the heating installation has reached a pressure of approx. 1.5 bar.
9. Close the filling and drain valve for the heating circuit.
10. Purge the heating circuit at the locations provided for this.
11. Purge the heating pump using the heating pump's drain screw.
12. Check the heating installation pressure again (if required, repeat the filling procedure).
13. Remove the filling loop from the filling and drain valve and screw the screw cap back on.

Moving the heating/cylinder charging diverter valve into the starting position

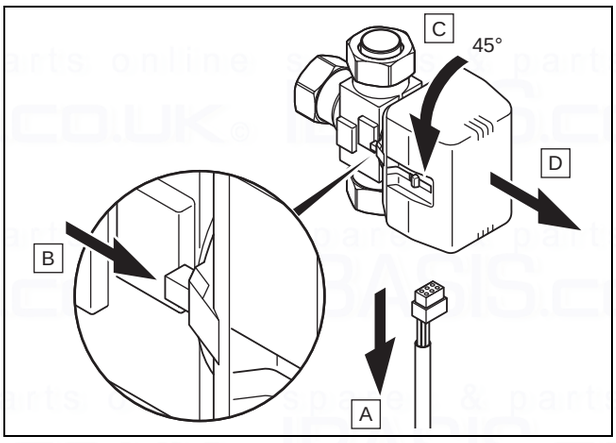

14. Remove the power supply cable from the motor head of the diverter valve.
15. Push the locking lever.
16. Turn the motor head by 45°.
17. Remove the motor head.

Note
This moves the spring in the valve body back into the starting position.

18. Turn the motor head back towards the valve body and reconnect the power supply cable.

Note
The white switch lever on the motor head of the diverter valve should now be in the starting position.

7.2 Filling and purging the brine circuit

7.2.1 Mixing the brine fluid

The brine fluid consists of water mixed with a concentrated frost protection agent. The brine fluids that may be used differ greatly from region to region. For more information, contact the responsible authorities.

Only the brine fluids named here are authorised by Vaillant for operating the heat pump.

Alternatively, suitable ready-mixed fluids for heat pumps can be ordered from Vaillant.

► Use a sufficiently large mixing container.
► Carefully mix ethylene glycol with water.

	Approved environment source
	Ground/groundwater module
Brine content	30% vol.
Water content	70% vol.
* Cloud point ** Cold protection	Above this temperature, the first ice crystals start to form in the brine fluid. At this temperature, half of the fluid volume has frozen; there is slush ice.

	Approved environment source
	Ground/groundwater module
Cloud point* of the aqueous ethylene glycol mixture	-16 °C
Cold protection** of the aqueous ethylene glycol mixture	-18 °C
* Cloud point ** Cold protection	Above this temperature, the first ice crystals start to form in the brine fluid. At this temperature, half of the fluid volume has frozen; there is slush ice.

► Check the mixture ratio of the brine fluid.
  – Working materials: Refractometer

In the event of special requirements, the following heat transfer media are also authorised by Vaillant for the ground and groundwater heat sources:

– Aqueous solution with 33% ± 1% vol. propylene glycol

7.2.2 Filling the brine circuit

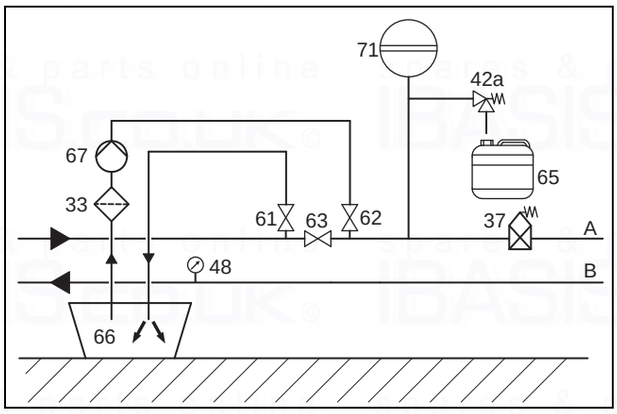

33	Dirt filter	65	Brine collecting container
37	Automatic air separator	66	Brine container
42a	Brine expansion relief valve	67	Filling pump
48	Pressure gauge (optional)	71	Brine diaphragm expansion tank
61	Stop valve	A	From the heat source to the heat pump (hot brine)
62	Stop valve		
63	Stop valve	B	From the heat pump to the heat source (cold brine)

1. Install a dirt filter **(33)** in the pressure line.
2. Connect the filling pump's pressure line to the stop valve **(62)**.
3. Close the stop valve **(63)**.
4. Open the stop valve **(62)**.
5. Connect a hose, which leads to the brine fluid, to the stop valve **(61)**.
6. Open the stop valve **(61)**.

Caution.
Risk of material damage caused by an incorrect filling direction.

If you fill the brine pump against the direction of flow, this may lead to a turbine effect which can damage the pump's electronics.

► Ensure that the brine pump is filled in the direction of flow.

7. Use the filling pump **(67)** to pour the brine fluid from the brine container **(66)** into the brine circuit.

7.2.3 Purging the brine circuit

1. Start up the filling pump **(67)** in order to fill and rinse the brine circuit.
2. Allow the filling pump **(67)** to run for at least 10 minutes in order to fill and rinse the circuit sufficiently.
3. Then close the stop valves **(61)** and **(62)** and switch off the filling pump **(67)**.
4. If required, repeat this rinsing process.
5. Open the stop valve **(63)**.

7.2.4 Building up pressure in the brine circuit

1. Use the filling pump **(67)** to pressurise the brine circuit.

Note
To operate the brine circuit without any problems, a filling pressure of 0.17 MPa (1.7 bar) is required. The expansion relief valve opens at 0.3 MPa (3 bar).

2. Read off the pressure on a pressure gauge (on-site).
   – Brine fluid operating pressure range: 0.07 … 0.20 MPa (0.70 … 2.00 bar)
3. Build up the pressure in the brine circuit by opening the stop valve **(62)** and using the filling pump to top up the brine fluid.
4. If required, reduce the pressure in the brine circuit by opening the stop valve **(61)** to drain brine fluid.
5. Check the brine circuit's filling pressure in the heat pump's display.
6. If required, repeat the process.
7. Remove the two hoses from the valves **(61)** and **(62)**.
8. Purge the system once more after starting up the heat pump.
9. Label the container that holds the remaining brine fluid with information about the type of brine fluid and the set concentration.
10. Pass the vessel with the remaining brine fluid on to the operator to be stored. Point out to the operator that there is a risk of injury when handling brine fluid.

8 Electrical installation

Danger!

Risk of death from electric shock caused by a residual-current circuit breaker not working.

In certain cases, residual-current circuit breakers may not work.

- If residual-current circuit breakers are required to ensure that people are protected and fire is prevented in line with the applicable standards, use type A pulse-current-sensitive residual-current circuit breakers or type B universal-current-sensitive residual-current circuit breakers.

- Observe the technical connection conditions for connecting to the power supply network operator's low-voltage network.
- Use the values for the maximum rated power that are specified in the technical data to determine the required line cross-sections.
- In each case, take into consideration the (on-site) installation conditions.
- Connect the product using a fixed connection and an electrical partition with a contact opening of at least 3 mm (e.g. fuses or power switches).
- Install the electrical partition right next to the heat pump.
- Connect the product to the power supply according to the identification plate.
- Fuse this connection using the exact values that are specified in the technical data.
- If the local power supply network operator requires that the heat pump is controlled using a blocking signal, fit a corresponding contact switch as prescribed by the power supply network operator.
- Ensure that the sensor lines, e. g. for the VRC DCF receiver, do not exceed the maximum line length of 50 m.
- At lengths of 10 m or more, mains voltage supply lines must be laid separately from sensor or bus lines. Minimum clearance for the extra-low voltage and mains voltage line at a line length of > 10 m: 25 cm. If this is not possible, use shielded lines. Lay the shielding on one side of the sheet for the product's electronics box.
- Do not use free terminals on the heat pump as base terminals for further wiring.

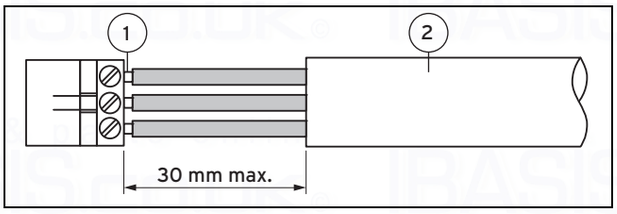

1 Connecting wires 2 Insulation

- Only strip a maximum of 3 cm from the outer sheathing of the flexible lines.
- Secure the conductors in the connection terminals.
  - Max. torque of the connection terminals: 1.2 Nm

8.1 Routing eBUS lines

1. Route the eBUS lines in a star formation from a junction box to the individual products.
2. Ensure that you do not route the eBUS lines parallel to the mains connection lines.
   - Piping diameter: ≥ 0.75 mm²

8.2 Opening the electronics box

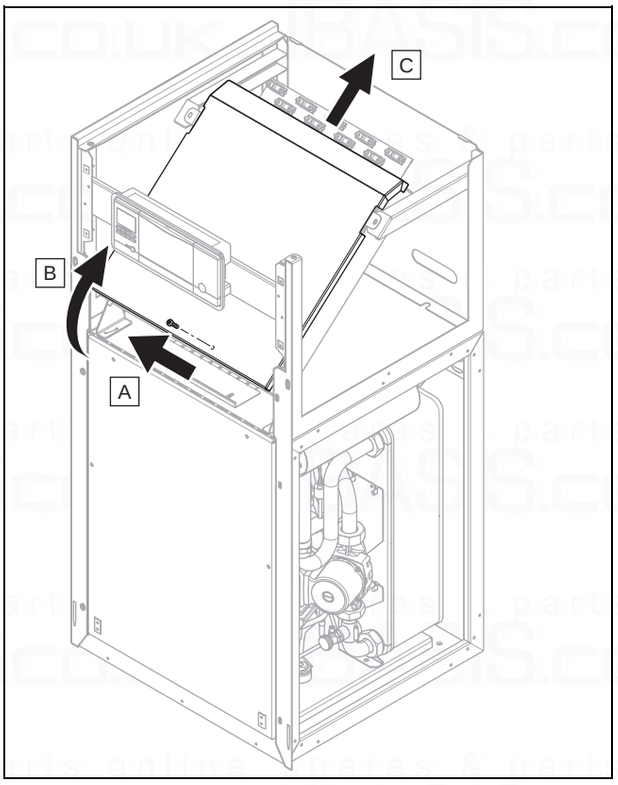

1. Remove the screw.
2. Pull the bottom of the cover forwards and lift it upwards.

8.3 Switch box

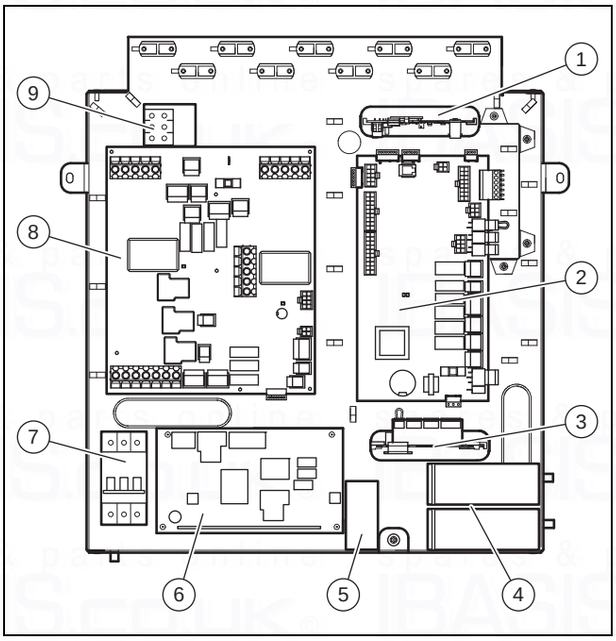

1	VR 32 modulating bus coupler (optional)* * If the system diagram selected on the system controller makes provision for this accessory, it can be connected here.	4	Run capacitors
2	Controller PCB	5	Start capacitor
3	VR 40 multi-functional module (2 in 7) (optional)** ** Relay 1 is used as a fault contact connection/alarm output for the heat pump. The function of relay 2 can be set in the system controller.	6	In-rush current limiter PCB
		7	Line protection switch
		8	Mains connection PCB
		9	Mains connection terminal for the auxiliary electric heater

8.4 Establishing the power supply

1. Route the power supply line(s) through the holes in the back wall of the product.
2. Guide the lines through the product, through the appropriate strain reliefs and to the terminals of the mains connection and controller PCB.
3. Wire the connections as illustrated in the connection diagrams below.

Note
There is no provision for using a connection diagram on the controller or on the heat pump operator control panel.

4. Tighten the strain reliefs.

8.4.1 Connecting the continuous power supply for the compressor and control system

► Connect the continuous power supply to the mains connection (X101). (→ Page 36)

8.4.2 Connecting the blockable power supply for the auxiliary heater

► Connect the power supply to the X102 mains connection. (→ Page 36)

8.4.3 Connecting an external brine pressure switch

In some cases (for example, in drinking water protection areas), local authorities require the installation of an external brine pressure switch that switches off the refrigerant circuit if the pressure in the brine circuit falls below a certain level. If the circuit is switched off by the brine pressure switch, a fault message is shown on the display.

► Pull out the X131 plug for the bypass line (source monitoring) on the mains connection PCB.
► Connect an external brine pressure switch to the two X131 terminals (Source Monitoring) on the mains connection PCB.
  – Rated voltage of external brine pressure switch: 230 V 50 Hz
  – Power range for external brine pressure switch (rms): 1 … 5 mA

8.4.4 Connecting a limit thermostat

In some cases where the underfloor heating has a direct power supply, a limit thermostat (on-site) is essential.

► Pull out the S20 plug for the bypass line at terminal X100 on the controller PCB.
► Connect the limit thermostat at this terminal.

8.4.5 Connecting an external well pump

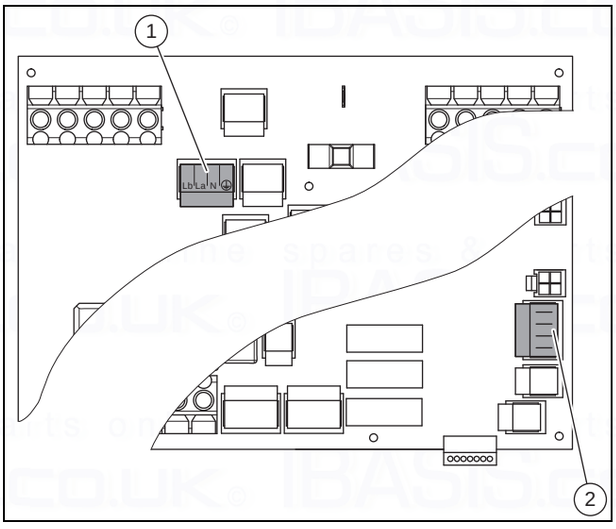

A changeover contact connection X143 **(1)** with the assignment Lb, La, N, PE is provided for connecting an external well pump.

Lb is the opening contact. If the cut-off relay contact to the well pump is closed, there is no voltage at Lb.

La is the closing contact. If the cut-off relay contact to the well pump is closed, there is no voltage at La.

The X200 **(2)** connection for the optional temperature sensors available as accessories is labelled RR for return connections and VV for flow connections.

- Connect an external well pump to the X143 connection.
  - Max. switching capacity at plug output: 1 A
- Connect the temperature sensors to the VV (suction well) and RR (injection well) terminals.

Note
No functions are coupled to these temperature sensors for monitoring the heat source. They are simply shown on the display.

8.4.6 Connecting the temperature sensor for an external domestic hot water cylinder (optional)

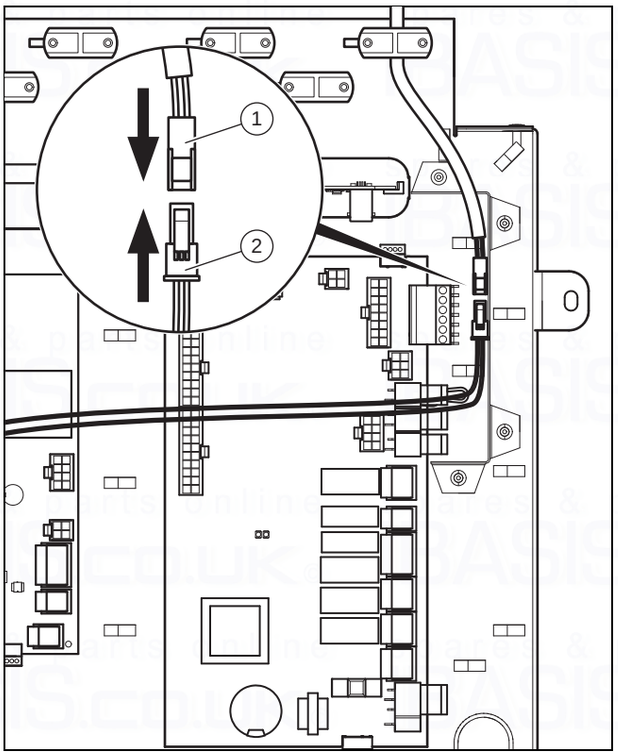

- Connect the cable on the VR 10 temperature sensor supplied as an accessory to bush **(1)** on plug **(2)**. Use a strain relief which does not have a mains voltage line running through it.

8.5 Mains connection PCB

Note

The total current consumption of all connected external consumers (including X141, X143, X144, X145) must not exceed 2.4 A.

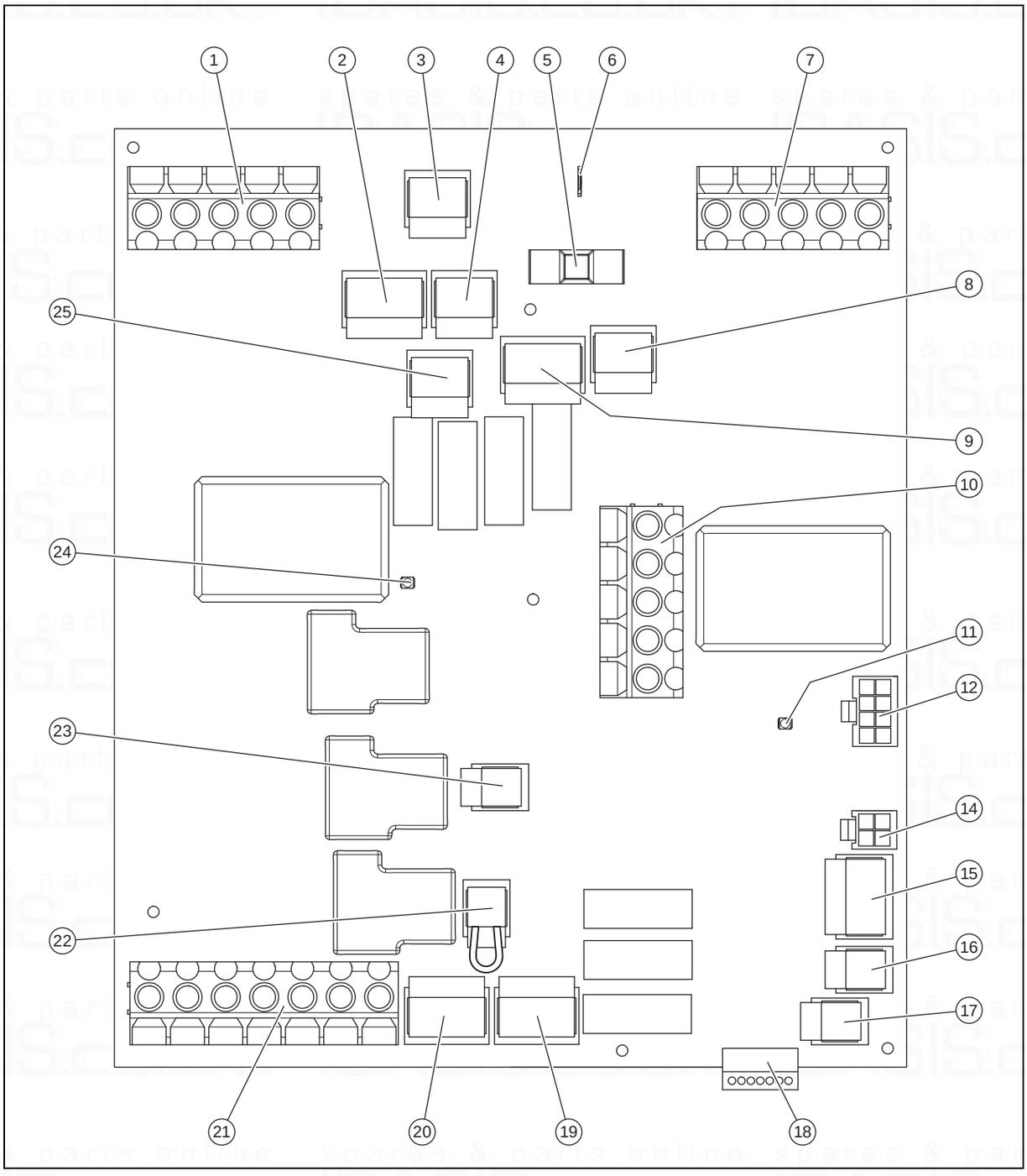

1	[X102] Mains connection for internal auxiliary electric heating	7	[X101] Mains connection for compressor and 230 V electronics system – mains connection PCB (TB) and controller PCB (HMU)
2	[X143] Well pump	8	[X1A] 230 V supply for controller PCB
3	[X120] Optional 230 V supply for protection anode	9	[X144] External 3-way valve
4	[X145] External auxiliary heating	10	[X105] Connection for compressor with in-rush current limiter
5	[F1] F1 T 4A/250 V fuse (protects 230 V loads on mains connection PCB)	11	LED safety switch for compressor
6	Protective earth connection for the electronics box		

12	[X20A] Connection for controller PCB communication line
14	[X201] (not used)
15	[X200] Optional temperature sensors for groundwater module
16	[X203] Optional flow temperature sensor for heating circuit with passive cooling module
17	[X202] (not used)
18	[X90] (not used)
19	[X140] Connection for 3-way diverter valve for passive cooling module
20	[X142] 3-way mixer valve for passive cooling module
21	[X104] Internal auxiliary electric heating connection
22	[X131] Optional external brine pressure switch connection
23	[X750] Safety cut-out for internal auxiliary electric heating
24	LED safety switch for auxiliary electric heating
25	[X141] Signal output for active cooling mode

8.6 Controller PCB

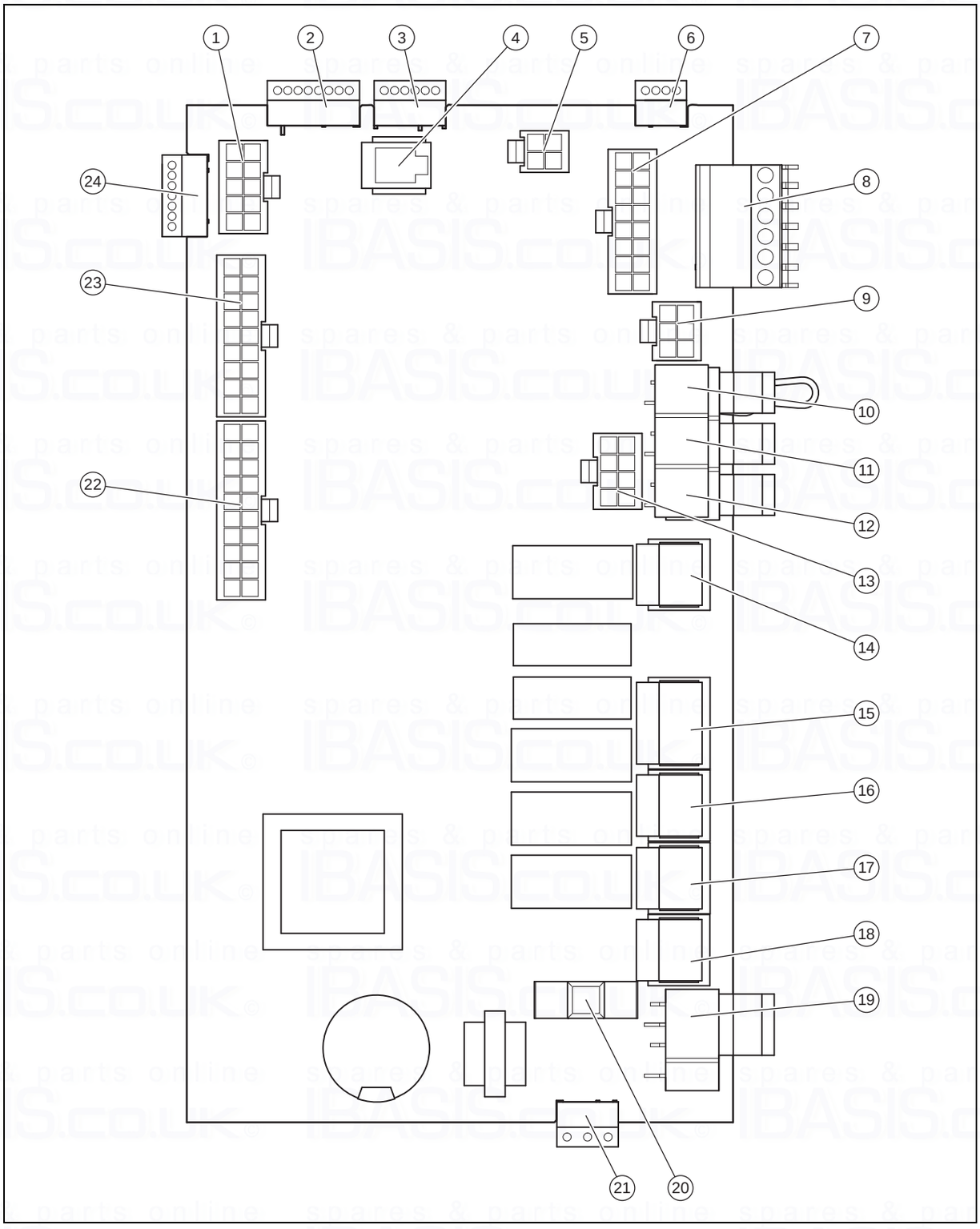

1	[X23] EEV connection (electrical expansion valve)	7	[X24] (not used)
2	[X40] VR40 edge connector (electrical lines)	8	[X41] Edge connector for external sensors (outside temperature sensor, DCF, system sensor, multi-function input (can be adjusted in the system controller))
3	[X51] Edge connector for display connection		
4	[X30] eBUS connection/diagnostics interface		
5	[X25] Modbus plug for controlling the in-rush current limiter	9	[X26] Sensor cable harness
6	[X31] (not used)	10	[X100/S20] Limit thermostat
		11	[X100/S21] EVU contact

12	[X100/BUS] Bus connection (**VR 900**)
13	[X20] Data connection to mains connection PCB and power supply for the in-rush current limiter
14	[X14] Circulation pump connection
15	[X15] Connection for internal 3-way valve for hot water (DHW)
16	[X13] Internal brine pump connection
17	[X16] Internal heating pump connection
18	[X11] Connection for internal 4-way valve
19	[X1] 230 V supply for controller PCB
20	[F1] F1 T 4A/250 V fuse
21	[X12] Edge connector for 230 V supply for optional VR 40
22	[X22] Connection for sensor cable harness (including connection for internal VR 10 cylinder temperature sensor and EVI valve)
23	[X21] Connection for sensor cable harness
24	[X90] (not used)

8.7 Connecting the system controller and accessories to the electronics system

1. Install the system controller in accordance with the installation instructions supplied.
2. Open the electronics box. (→ Page 21)
3. Carry out the wiring. (→ Page 28)
4. Connect controllers and accessories in accordance with the relevant system diagrams and installation instructions.
5. Install the VRC DCF receiver.
6. Close the electronics box.

8.8 Carrying out the wiring

Caution.

Risk of material damage caused by incorrect installation.

Mains voltage at incorrect terminals and plug terminals may destroy the electronics.

- ► Do not connect any mains voltage to the eBUS terminals (+/-).
- ► Only connect the mains connection cable to the terminals marked for the purpose.

1. Route the supply lines of the components to be connected through the cable duct provided on the rear of the product on the left.
2. Use the cable channel on the top of the product.
3. Use strain reliefs.
4. Shorten the supply lines as necessary.

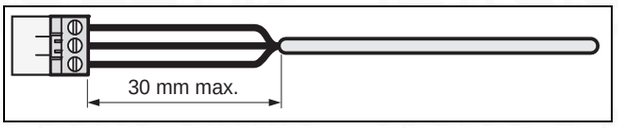

5. To prevent short circuits if a strand accidentally comes loose, only strip the outer sheathing of flexible lines to a maximum of 30 mm.
6. Ensure the inner conductor insulation is not damaged when stripping the outer sheathing.
7. Only strip inner conductors just enough to establish good, sound connections.
8. To avoid short circuits resulting from loose individual wires, fit conductor end sleeves on the stripped ends of the conductors.
9. Screw the respective plug to the supply line.
10. Check whether all conductors are sitting mechanically securely in the terminals of the plug. Remedy this if necessary.
11. Plug the plug into the associated PCB slot.

8.9 Installing the VRC DCF

- ► Install the VRC DCF receiver in accordance with the installation instructions for the system controller.

8.10 Installing optional accessories

1. Route the lines through the ducts in the back wall of the product.
2. Open the electronics box. (→ Page 21)
3. Connect the connection cable to the corresponding plugs or slots on the mains connection PCB or controller PCB.
4. Use the strain reliefs to secure the lines in the product.

8.11 Checking the electrical installation

1. After the installation is complete, check the electrical installation to ensure that the connections that have been established are secured properly and are sufficiently insulated.
2. Install the cover of the electronics box. (→ Page 21)

8.12 Completing installation

8.12.1 Fitting the casing

1. Fit the side casings and screw in the screws.
2. Place the casing top on the side casings and slide it back into the recesses provided for this in the back wall.
3. Hook the upper part of the front casing, using the retaining brackets, into the recesses in the side casings and lower it down.
4. Hook the lower part of the front casing, using the retaining brackets, into the recesses in the side casings and fold it up.
5. Install the panel on the operator control panel.
6. Attach the operator control panel cover and check that the cover can move easily when it is opened from either side.

8.12.2 Checking the system pressure and leak-tightness

1. After completing the installation, carry out a check of the system.
2. Start up the product in accordance with the relevant operating instructions.
3. Check the filling pressure of the heating installation and check for leaks.

9 Start-up

9.1 Operating concept

→ Operating instructions

9.2 Starting up the heat pump

► Switch on the power supply.

◁ The basic display appears on the display.

Note
In the case of a restart following a loss of voltage or a shutdown of the power supply, the current date and time are automatically reset by the DCF receiver or, if there is no DCF reception, you must reset these values yourself.

9.3 Running the installation assistants

The installation assistant is launched when the heat pump is switched on for the first time.

Menu → Installer level Configuration

► Press ⊟ to confirm that you wish to start the installation assistant.

◁ All heating, cooling and hot water requests are blocked whilst the installation assistant is active.

Note
You cannot exit the installation assistant until the environment circuit type has been set.

► To access the next point, confirm by pressing ⊟ in each case.

9.3.1 Setting the language

1. To confirm the set language and to avoid unintentionally changing it, press ⊟ twice.

Conditions: Unknown language set

► Press and hold ⊟ and ⊞ at the same time.
► Also briefly press reset.
► Press and hold ⊟ and ⊞ until the display shows the language setting option.
► Select the required language.
► Press ⊟ twice to confirm this change.

9.3.2 Setting the environment circuit type

The following environment circuit types can be set:

– Ground/brine
– Air/brine
– Groundwater/brine

9.3.3 Setting the cooling technology

You must set the installed cooling technology.

When using ground/brine as the heat source, active cooling is limited to a brine output temperature of 40 °C in order to protect the source/probe borehole. If this temperature is exceeded (> 40 °C), active cooling mode is switched off. This limit can only be changed by Vaillant Customer service.

9.3.4 Enabling auxiliary electric heating

On the system controller, you can select whether the auxiliary electric heating is to be used for heating mode, hot water handling mode or both modes. Set the maximum output for the auxiliary electric heater at the heat pump's operator control panel here.

► Activate the internal auxiliary electric heating with one of the following output levels.
► Make sure that the maximum output of the auxiliary electric heating does not exceed the power of the fuse protection installed in the domestic electrical system (see technical data for measuring currents).

Note
Otherwise the domestic circuit breaker may be triggered later if the output of the heat source is insufficient and the auxiliary electric heating (which has a higher output) is switched off.

Output levels for the 230 V auxiliary electric heating (when connecting one phase; see Appendix A):

– External
– 2.0 kW
– 3.5 kW
– 5.5 kW

Output levels for the 230 V auxiliary electric heating (when connecting three separate phases; see Appendix B):

– 7 kW
– 9 kW

9.3.5 Purging the building circuit

► Start the check programme **P.05** in order to purge the building circuit. (→ Page 33)

9.3.6 Purging the environment circuit

► Start the check programme **P.06** in order to purge the environment circuit. (→ Page 33)

Conditions: Air/brine heat source

– Programme duration of approx. 1 hour. In addition to purging, the programme includes a self-test of the air/brine collector which checks the following points: Phase errors, communication with outdoor unit, brine pressure, safety cut-out of the defroster heater, brine pump operation, brine circuit flow rate, fan, sensor faults, temperature balancing, calibration of the heat pump brine sensor, calibration of the air/brine collector brine sensor, inversion of brine lines, brine circuit purging function

9.3.7 Telephone number for the competent person

You can store your telephone number in the appliance menu.

The operator can display it in the information menu. The telephone number can be up to 16 digits long and must not

contain any spaces. If the telephone number is shorter, end the entry after the last digit by pressing ⊟.

All of the digits to the right will be deleted.

9.3.8 Ending the installation assistant

► Once you have run through the installation assistant successfully, confirm by pressing ⊟.

◁ The installation assistant will close and will not launch again when the product is next switched on.

9.4 Calling up the installer level

1. Press ⊟ and ⊟ at the same time.
2. Navigate to **Menu** → **Installer level** and confirm by pressing ⊟ (**OK**).
3. Set the value **17** (code) and confirm by pressing ⊟.

9.5 Heating mode flow temperature regulation

For economical and fault-free operation of a heat pump, it is important to regulate the start of the compressor. Using the energy balance control, it is possible to minimise the number of heat pump start-ups without having to forgo the convenience of a comfortable room environment. As with other weather-controlled heating controllers, the controller determines a target flow temperature by recording the outside temperature using a heating curve. The energy balance calculation is made on the basis of this target flow temperature and the actual flow temperature – the difference per minute is measured and added up:

1 degree minute [°min] = 1 K temperature difference in the course of 1 minute

The heat pump starts up at a defined heat deficit (under the menu point **Configuration→ Compressor starts at**) and only switches off again when the supplied heat is equal to the heat deficit. The larger the preset negative numerical value, the longer the periods for which the compressor operates or does not operate.

As an additional condition, if there is a deviation of more than 7 K between the actual flow temperature and the target flow temperature, the compressor is directly switched on and switched off. The compressor always starts immediately if a heating demand only just arises from the controller (e.g. due to a time period or switching the gas-fired boiler operation to heat pump mode).

Time conditions for compressor operation

The following shall always apply for operation:

– Minimum running time: 3 minutes
– Minimum rest period: 7 minutes
– Minimum time from start to start: 20 minutes

9.6 Calling up statistics

Menu → Installer level → Test menu → Statistics

– You can use this function to call up the statistics for the heat pump.

9.7 Checking that the product works correctly

1. Start up the product in accordance with the relevant operating instructions.
2. Navigate to **Menu** → **Installer level** → **Test menu** → **Check programs**.
3. Check the heating mode.
4. Check the hot water handling mode.
5. Check the cooling mode.

10 Adapting the unit to the heating installation

10.1 Setting parameters

The installation assistant is launched when the product is switched on for the first time. When the installation assistant is complete, you can further adjust the parameters of the installation assistant, for example, in the **Configuration** menu.

Menu → Installer level Configuration

10.2 Setting the high-efficiency pumps

10.2.1 Setting the building circuit pump

Automatic mode

At the factory, the nominal flow is automatically achieved by volume flow regulation. This volume flow regulation allows for efficient operation of the building circuit pump because the pump speed is adjusted to the hydraulic resistance of the system. Vaillant recommends that you retain this setting.

Manual mode

Menu → Installer level → Configuration → Conf. heat. build. pump

Menu → Installer level → Configuration → Conf. cool. build. pump

Menu → Installer level → Configuration → Conf. DHW build. pump

If you do not want to operate the pump in automatic mode, you can set it to manual mode in the **Configuration** menu for different operating modes. The diagrams below show how setting the pump actuation affects the remaining feed head at nominal flow for a temperature spread of 5 K on the heating side.

Setting the maximum differential pressure in the building circuit

Menu → Installer level → Configuration → Max. remaining feed head

If the differential pressure in the building circuit is not permitted to exceed a maximum value, this limit can be set in the **Configuration** menu within the range of 0.02 to 0.1 MPa (200 to 1000 mbar).

10.2.2 Remaining feed head of building circuit pump

10.2.2.1 Remaining feed head for VWF 5x/4 building circuit pump at nominal flow

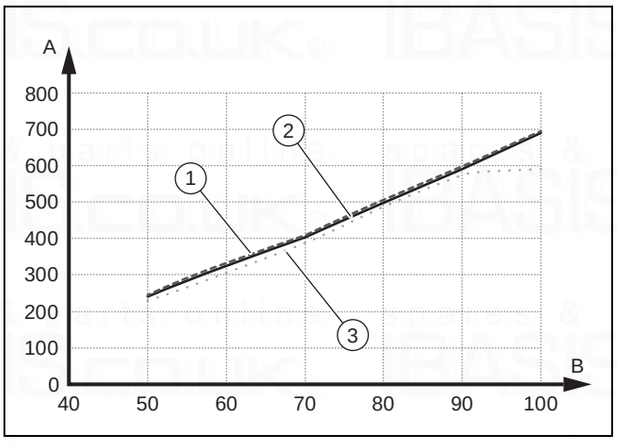

1	Air heat source	A	Remaining feed head in hPa (mbar)
2	Ground heat source	B	Pump output in %
3	Groundwater heat source		

10.2.2.2 Remaining feed head for VWF 8x/4 building circuit pump at nominal flow

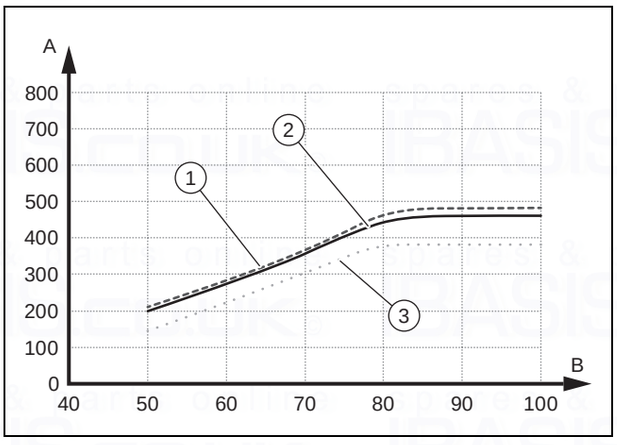

1	Air heat source	A	Remaining feed head in hPa (mbar)
2	Ground heat source	B	Pump output in %
3	Groundwater heat source		

10.2.2.3 Remaining feed head for VWF 11x/4 building circuit pump at nominal flow

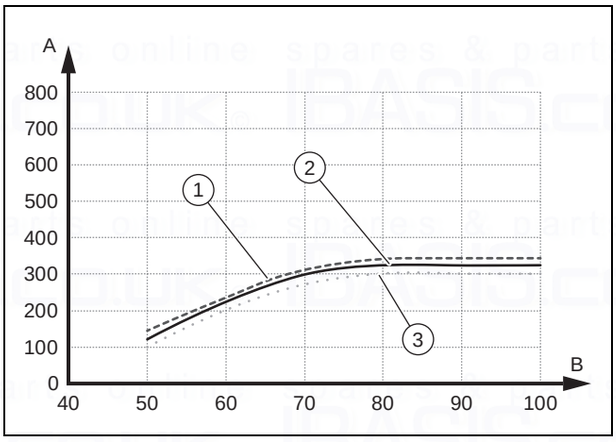

1	Air heat source	A	Remaining feed head in hPa (mbar)
2	Ground heat source	B	Pump output in %
3	Groundwater heat source		

10.2.3 Setting the environment circuit pump

If the heat source temperature spread lies below 2 K due to low pressure losses (large pipe cross-sections, small drilling depth, with air as the heat source: Short distance to the air/brine collector) in continuous mode, you can adjust the pump output. The following diagram shows how setting the pump actuation affects the remaining feed heads at nominal flows for a heat source temperature spread of 3 K.

The factory setting on the environment circuit pump depends on the environment circuit type set and the output range.

- ► Navigate to the **Menu** → **Installer level** → **Configuration** → **Env. pump target val.** menu point.
- ► If necessary, change the factory setting and confirm by pressing ⊟.

10.2.4 Remaining feed head of environment circuit pump

10.2.4.1 Remaining feed head for VWF 5x/4 environment circuit pump at nominal flow

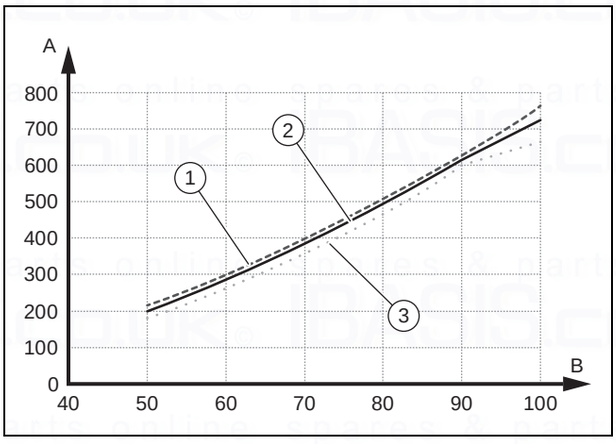

1	Air heat source	2	Ground heat source

3	Groundwater heat source	B	Pump output in %
A	Remaining feed head in hPa (mbar)		

10.2.4.2 Remaining feed head for VWF 8x/4 environment circuit pump at nominal flow

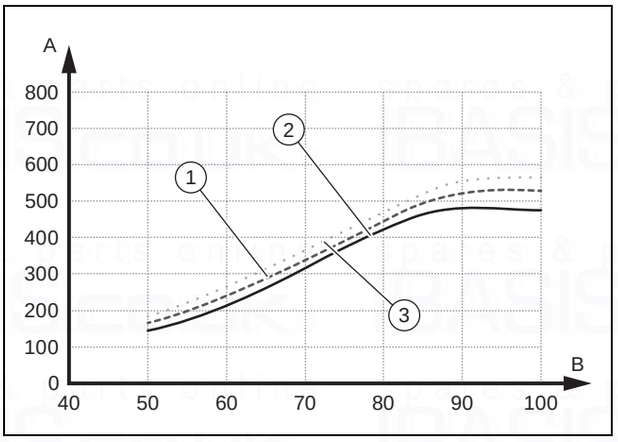

1	Air heat source	A	Remaining feed head in hPa (mbar)
2	Ground heat source	B	Pump output in %
3	Groundwater heat source		

10.2.4.3 Remaining feed head for VWF 11x/4 environment circuit pump at nominal flow

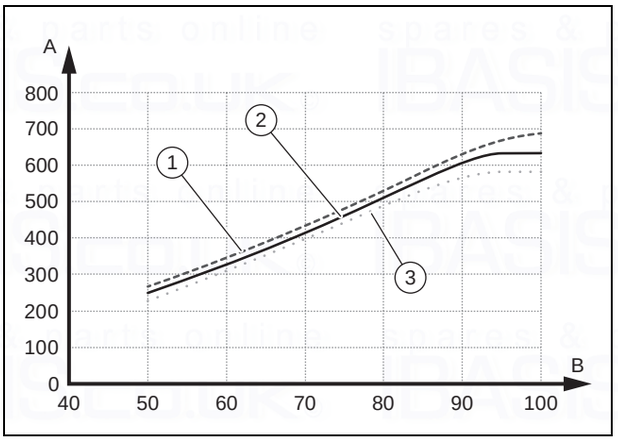

1	Air heat source	A	Remaining feed head in hPa (mbar)
2	Ground heat source	B	Pump output in %
3	Groundwater heat source		

10.3 Setting the flow temperature in heating mode (with no controller connected)

1. Activate manual mode.
   – **Menu → Installer level → Configuration → Enable limp home mode**
2. Press ⊟ (▥).
   ◁ The display shows the flow temperature in heating mode.
3. Change the flow temperature in heating mode by pressing ⊖ or ⊕.
   – Max. heating mode target flow temperature: 75 °C
4. Confirm this change by pressing ⊟ (**OK**).

10.4 Setting the flow temperature in cooling mode (with no controller connected)

1. Activate manual mode.
   – **Menu → Installer level → Configuration → Enable limp home mode**
2. Press ⊟ twice.
   ◁ The display shows the value of the flow temperature in cooling mode.
3. Change the flow temperature in cooling mode by pressing ⊖ or ⊕.
4. Confirm this change by pressing ⊟ (**OK**).

Note
At the factory, the target flow temperature can be set to between 20 °C and 16 °C in passive cooling mode.

10.5 Handing the product over to the operator

- ► Explain to the operator how the safety devices work and where they are located.
- ► Inform the operator how to handle the product.
- ► In particular, draw attention to the safety information which the operator must follow.
- ► Inform the operator of the necessity to have the product maintained according to the specified intervals.
- ► Pass all of the instructions and documentation for the product to the operator for safe-keeping.

11 Troubleshooting

11.1 Displaying the Live Monitor (current product status)

Menu → Live Monitor

– You can use the Live Monitor to display the current status of the product.

Status codes – Overview (→ Page 41)

11.2 Checking fault codes

The display shows a fault code **F.xxx**. A plain text display explains the displayed fault code.

Fault codes have priority over all other displays.

Fault codes (→ Page 43)

If multiple faults occur at the same time, the display shows the corresponding fault codes for two seconds each in sequence.

- ► Rectify the fault.
- ► To restart the product, press reset (→ Operating instructions).

11.3 Querying the fault memory

Menu → Installer level Fault list

The product has a fault memory. You can use this to query the last ten faults that occurred in chronological order.

If a DCF sensor is connected, the date on which the fault occurred will also be displayed.

Display views

- – The number of faults that have occurred
- – The fault currently selected with fault number **F.xxx**

11.4 Resetting the fault memory

1. Press ⊟ (**Delete**).
2. Confirm that you wish to clear the fault memory by pressing ⊟ (**Ok**).

11.5 Restarting the installation assistant

You can restart the installation assistant any time by calling it up manually in the menu.

Menu → Installer level → Start inst. assistant

11.6 Using check programmes

Menu → Installer level → Test menu → Check programmes

You can use this function to start check programmes.

Note
If a fault has occurred, the check programmes are not run.

You can terminate the check programmes by pressing ⊟ (**Cancel**) at any time.

11.7 Carrying out the actuator test

Menu → Installer level → Test menu → Sensor/actuator test

You can check that the components of the heating installation are functioning correctly using the sensor/actuator test. You can actuate more than one actuator at a time.

If you do not select anything to change, you can have the current control values for the actuators and the sensor values displayed.

You can find a list of the sensor characteristics in the appendix.

Characteristic values for the VR 10 external temperature sensor (→ Page 48)

Characteristic values for internal temperature sensors (→ Page 49)

Characteristic values for the VRC DCF outdoor temperature sensor (→ Page 50)

11.8 Auxiliary electric heater circuit breaker

A circuit breaker is used to secure the internal auxiliary electric heater against short circuits. If the circuit breaker has been triggered, the auxiliary electric heater remains switched off until the short circuit has been rectified and the circuit breaker in the electronics box has been manually reset.

11.8.1 Resetting the circuit breaker in the auxiliary electric heater

1. Check the supply line to the mains connection PCB.
2. Check that the mains connection PCB is working correctly.
3. Check the supply lines for the auxiliary electric heater.
4. Check that the auxiliary electric heater is working correctly.
5. Rectify the short circuit.
6. Reset the circuit breaker in the electronics box.

12 Inspection and maintenance

12.1 Inspection and maintenance information

12.1.1 Inspection

The inspection is intended to determine the actual condition of a product and compare it with the target condition. This is done by measuring, checking and observing.

12.1.2 Maintenance

Maintenance is required in order to eliminate any deviations between the actual condition and the target condition. This is normally done by cleaning, setting and, if necessary, replacing individual components that are subject to wear.

12.2 Procuring spare parts

The original components of the product were also certified by the manufacturer as part of the declaration of conformity. If you use other, non-certified or unauthorised parts during maintenance or repair work, this may void the conformity of the product and it will therefore no longer comply with the applicable standards.

We strongly recommend that you use original spare parts from the manufacturer as this guarantees fault-free and safe operation of the product. To receive information about the available original spare parts, contact the contact address provided on the reverse of these instructions.

- ► If you require spare parts for maintenance or repair work, use only the spare parts that are permitted for the product.

12.3 Inspection and maintenance check-list

The following table shows the inspection and maintenance work that must be carried out at specific intervals.

No.	Work	Inspection (every year, within 24 months at the latest)	Maintenance (every two years)
1	Check the general condition of the product and that it is leak-tight.	x	x
2	Check the pressure in the heating circuit and, if required, top up the heating water.	x	x
3	Check and clean the dirt filters in the heating circuit.	x	x
4	Check the volume and concentration of the brine fluid and the pressure in the brine circuit. Top up with brine fluid if required.	x	x
5	Check that the expansion vessel and the expansion relief valve in the brine circuit are working correctly.	x	x
6	Check that the expansion vessel and the expansion relief valve in the heating circuit are working correctly.	x	x
7	Check for leaks in the brine and heating circuit, and repair these leaks if necessary.	x	x
8	Check that the circuit breaker in the electronics box is working correctly.	x	x

12.4 Checking and correcting the filling pressure of the heating installation

If the filling pressure falls below the minimum pressure, a maintenance message is shown on the display.

– Min. heating circuit pressure: ≥ 0.05 MPa (≥ 0.50 bar)

► Top up the heating water in order to start up the heat pump again; Filling and purging the heating installation (→ Page 19).

► If you notice frequent losses in pressure, determine and eliminate the cause.

12.5 Checking and correcting the filling pressure in the brine circuit

If the filling pressure falls below the minimum pressure, the heat pump is automatically shut down and a maintenance message is shown on the display.

– Minimum brine fluid pressure: ≥ 0.05 MPa (≥ 0.50 bar)

► Top up the brine fluid to start up the heat pump again, Filling the brine circuit (→ Page 20).

– Min. brine fluid operating pressure: ≥ 0.07 MPa (≥ 0.70 bar)

► If you notice frequent losses in pressure, determine and eliminate the cause.

12.6 Carrying out a restart and test operation

Warning.

Risk of burns due to hot and cold components.

There is a risk of burns from any uninsulated pipelines and from the auxiliary electric heating.

► Before starting up the unit, install any casing sections that have been removed.

1. Start up the heat pump system.
2. Check that the heat pump system is working without any problems.

13 Decommissioning

13.1 Temporarily decommissioning the product

1. Use the partition that is installed on-site (e.g. fuses or power switches) to disconnect the product from the power supply.
2. Observe the installation site requirements regarding frost protection. (→ Page 12)

13.2 Decommissioning the product

1. Use the partition that is installed on-site (e.g. fuses or power switches) to disconnect the product from the power supply.
2. Drain the product.
3. Dispose of the product and the operating materials in accordance with the national regulations.

14 Recycling and disposal

Disposing of the packaging

► Dispose of the packaging correctly.

Disposing of the product and accessories

► Do not dispose of the product or the accessories with household waste.

► Dispose of the product and all accessories correctly.

► Observe all relevant regulations.

14.1 Disposing of the brine fluid

Danger!
Risk of injury due to chemical burns!

The brine fluid ethylene glycol is harmful to health.

- Avoid contact with the skin and eyes.
- Do not inhale or swallow.
- Always wear gloves and protective goggles.
- Observe the safety data sheet that accompanies the brine fluid.

- Ensure that the brine fluid is disposed of in compliance with local regulations, for example, at an appropriate waste site or waste incineration plant.
- For smaller volumes, contact your local disposal company.

14.2 Arranging disposal of coolant

The product is filled with R 410 A refrigerant.

- Coolant must only be disposed of by a qualified competent person.

15 Customer service

Applicability: Great Britain

To ensure regular servicing, it is strongly recommended that arrangements are made for a Maintenance Agreement. Please contact Vaillant Service Solutions for further details:

Telephone: 0330 100 3461

Appendix

A Power supply 1~/N/PE 230 V (connection diagram 1 = ⚡1)

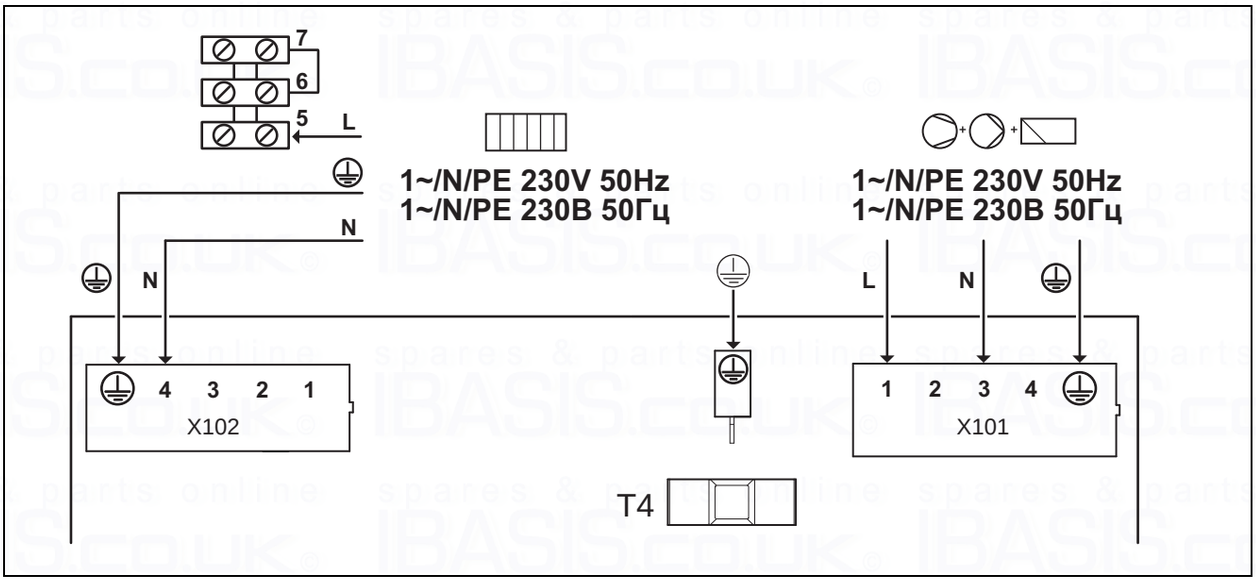

1	Power supply for internal auxiliary electric heating	X101	Mains connection for compressor
2	Continuous power supply	X102	Mains connection for internal auxiliary electric heating

This is how it is wired when supplied.

In this case, the heat pump is operated using two electricity tariffs (two consumption meters). The X101 connection for the compressor and electronics is continuously supplied with power. The internal auxiliary electric heating at X102 is supplied with power via a separate connection, either continuously or with interruptions.

B Power supply 3~/PE 230 V (connection diagram 2 = ⚡2)

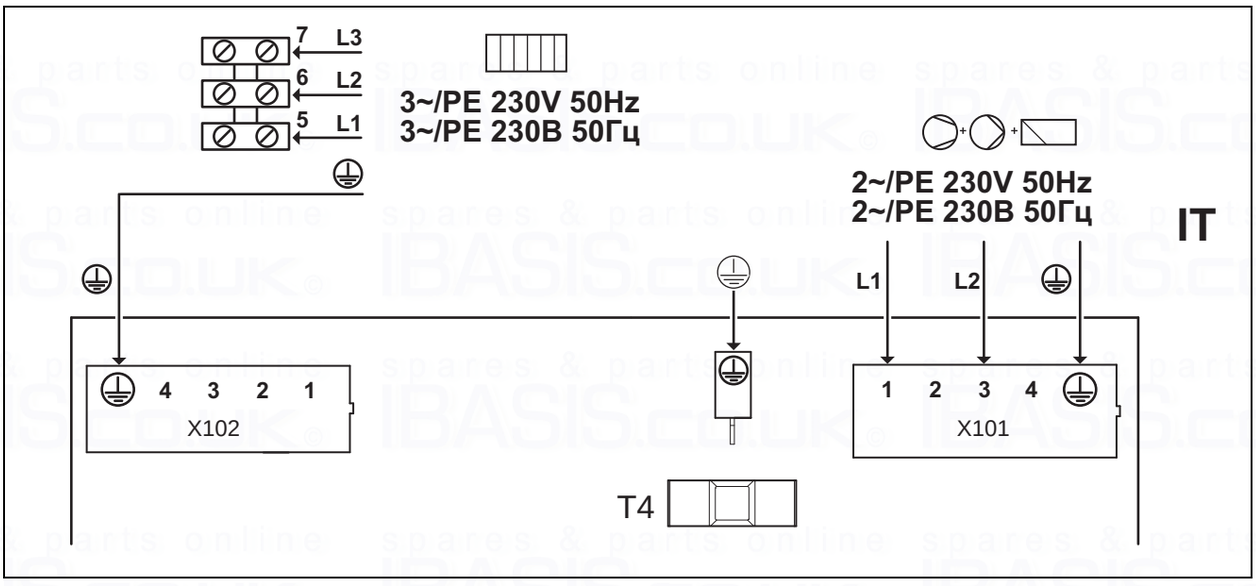

1	Blockable power supply for internal auxiliary electric heating	X101	Mains connection for compressor
2	Blocked power supply for the compressor and control system	X102	Mains connection for internal auxiliary electric heating

In this case, the heat pump is operated using two electricity tariffs (two consumption meters). The X101 connection for the compressor and electronics is continuously supplied with power. The internal auxiliary electric heating at X102 is supplied with power via a separate connection, either continuously or with interruptions.

C Installer level overview

Setting level	Values		Unit	Increment, select, explanation	Default setting	Setting
	Min.	Max.				
Installer level →						
Enter code	00	99		1 (competent person code 17)	00	
Installer level → List of faults →						
F.086 – F.1120[1]				Deleting		
Installer level → Test menu → Statistics →						
Compressor hours	Current value		h			
Compressor starts	Current value					
Build. pump hours	Current value		h			
Build. pump starts	Current value					
Environm. pump hours	Current value		h			
Environm. pump starts	Current value					
4-way valve hours	Current value		h			
4-way valve switch.	Current value					
Cooling mixer steps	Current value					
EEV steps, el. expansion valve steps	Current value					
EEV-VI steps, el. expansion valve injection steps	Current value					
VUV DHW switchings	Current value					
Well pump hours	Current value		h			
Well pump starts	Current value					
Heat. rod power cons.	Current value		kWh			
Heat. rod switchings	Current value					
Heat. rod op. hours	Current value		h			
Installer level → Test menu → Check programmes →						
P.01 Heating mode				Select		
P.02 Cooling mode				Select		
P.03 Hot water handling				Select		
P.04 Heating rod				Select		
P.05 Purge building circuit				Select		
P.06 Purge environment circuit				Select		
P.07 Purge environment and building circuit				Select		
P.08 Manual defrost				Select		
Installer level → Test menu → Sensor/actuator test →						
Actuators						
Building circuit actuators						
T.01 Building circuit pump power	0	100	%	5, off	Off	
T.02 DHW diverter valve	Heating	Domestic hot water		Heating, Domestic hot water	Heating	
T.03 Cooling diverter valve (only for passive cooling)	Heating	Cooling		Heating, Cooling	Heating	

[1] See overview of fault codes

Setting level	Values		Unit	Increment, select, explanation	Default setting	Setting
	Min.	Max.				
Environment circuit actuators						
T.14 Env. circuit pump power	0	100	%	5	0	
T.16 Cooling mixer position (only for passive cooling)	Closes	Opens		Closes, Stops, Opens	Stops	
T.17 Well pump	Off	On		Off, On	Off	
Refrigeration circuit actuators						
T.32 4-way valve (only for active cooling)	Open	Closed		Open, closed	Closed	
T.33 Position: EEV	0	100	%	5	0	
T.34 Position: EEV-VI	0	100	%	5	0	
Further actuators						
T.45 Fault outlet	Off	On		Off, On	Off	
T.46 MPO2 output	Off	On		Off, On	Off	
T.47 System pump power	0	100	%	5	0	
T.48 Circulation pump	Off	On		Off, On	Off	
T.49 Relay: Cooling active (only for passive or active cooling)	Off	On		Off, On	Off	
Sensors						
Building circuit sensors						
T.79 Flow temperature	−40	90	°C	0.1		
T.80 Cooling flow temperature (only for passive cooling)	−40	90	°C	0.1		
T.81 Return temperature	−40	90	°C	0.1		
T.82 Building circuit: Pressure	0	4.5	bar	0.1		
T.83 Building circuit: Flow rate	0	4000	l/h	1		
T.84 Lockout contact S20	Open	Closed		Open, closed	Closed	
T.85 Safety cut-out heating rod	Closed	Open		Closed, Open	Closed	
T.86 Cylinder temperature	−40	90	°C	0.1		
Environment circuit sensors						
T.97 Environment circuit: Inlet temperature	−40	90	°C	0.1		
T.98 Environment circuit: Outlet temperature	−40	90	°C	0.1		
T.99 Well inlet temperature (only for well environment circuit type)	−40	90	°C	0.1		
T.100 Well outlet temperature (only for well environment circuit type)	−40	90	°C	0.1		
T.101 Environment circuit: Pressure	0	4.5	bar	0.1		
T.102 Fault contact: Env. circuit pump	Closed	Open		Closed, Open	Closed	
T.103 Environment circuit: Pressure monitor (only for ground/brine environment circuit type)	Closed	Open		Closed, Open	Closed	
Refrigeration circuit sensors						
T.121 Compressor outlet temperature	−40	135	°C	0.1		
T.122 Compressor inlet temperature	−40	90	°C	0.1		
T.123 EEV-VI inlet temperature	−40	90	°C	0.1		
T.124 EEV-VI outlet temperature	−40	90	°C	0.1		

[1] See overview of fault codes

Setting level	Values		Unit	Increment, select, explanation	Default setting	Setting
	Min.	Max.				
T.127 High pressure	0	47	bar (abs)	0.1		
T.128 Condensation temperature	−40	70	°C	0.1		
T.129 Low pressure	0	22	bar (abs)	0.1		
T.130 Evaporation temperature	−40	90	°C	0.1		
T.131 Superheating target value	−40	90	K	0.1		
T.132 Superheating actual value	−40	90	K	0.1 to 20 K are normal operating parameters		
T.134 High-pressure switch	Closed	Open		Closed, Open	Closed	
T.135 Temperature switch: Compressor outlet	Closed	Open		Closed, Open	Closed	
Further sensors						
T.146 Outside temperature	−40	90	°C	0.1		
T.147 DCF status	Current value			No DCF signal Validate DCF signal Valid DCF signal		
T.148 System temperature	−40	90	°C	0.1		
T.149 MPI input	Closed	Open		Closed, Open	Open	
Installer level → Configuration →						
Language	Current language			Languages available for selection	02English	
Contact details, Telephone number	Phone number			0 - 9		
Compressor starts at	−999	0	°min	1	−60	
Max. return temp.	30	70	°C	1	70	
Comp. hysteresis	3	15		1	7	
Max. rem. feed head	200	1000	mbar	10	1000	
Conf. heat. build. pump	Auto	100	%	1	Auto	
Conf. cool. build. pump	Auto	100	%	1	Auto	
Conf. DHW. build. pump	Auto	100	%	1	Auto	
Reset anti-cycl. time, Anti-cycl. time after pow. supp. switch-on	0	120	min	10	0	
Heat. rod outp. range	External	9	kW	230 V – External – 2 kW – 3.5 kW – 5.5 kW – 7 kW – 9 kW	5.5	
[1] See overview of fault codes						

Setting level	Values		Unit	Increment, select, explanation	Default setting	Setting
	Min.	Max.				
Enviro. pump set p.	1	100	%	1	Ground/brine – VWF 5x/4 230 V: 100 – VWF 8x/4 230 V: 100 – VWF 11x/4 230 V: 100 Well – VWF 5x/4 230 V: 47 – VWF 8x/4 230 V: 100 – VWF 11x/4 230 V: 100	
Freeze protection	Ground/brine: −14 Well: +2	5	°C	1	Ground/brine: -7 Well: +2	
Enviro. circuit type	Current value			Ground/brine Well		
Enable emergency mode	Off	On		Off, On	Off	
Cooling technology	No cooling	On-site pass. cooling		No cooling Active cooling On-site pass. cooling On-site pass. cooling	0	
Device specific number	40	44		Current value	VWF 5x/4 230 V = 40 VWF 8x/4 230 V = 41 VWF 11x/4 230 V = 42	
Software version	Current value for the controller PCB (HMU xxxx) and the display (AI xxxx) Software version of the TB mains connection PCB Software version of the in-rush current limiter ICL Software version of the first fan unit OMU1 Software version of the second fan unit OMU2			xxxx.xx.xx		
Installer level → Resets →						
Blocking times reset				Yes, No	No	
Statistics reset				Yes, No	No	
Factory settings				Yes, No	No	
Installer level → Start inst. assistant →						
Language				Languages available for selection	02English	
Enviro. circuit type	Select			Ground/brine Well		

[1] See overview of fault codes

Setting level	Values		Unit	Increment, select, explanation	Default setting	Setting
	Min.	Max.				
Freeze protection	Ground/brine: −14 Well: +2	5	°C	1	Ground/brine: -7 Well: +2	
Heat. rod outp. range	External	9	kW	1 230 V – External – 2 kW – 3.5 kW – 5.5 kW – 7 kW – 9 kW	5.5	
Cooling technology	No cooling	On-site pass. cooling		No cooling Active cooling On-site pass. cooling On-site pass. cooling	No cooling	
Check program: Purge environment and building circuit	Test not active	Test active		Test not active, Test active	Test not active	
Check program: Purge building circuit	Test not active	Test active		Test not active, Test active	Test not active	
Check program: Purge environment circuit	Test not active	Test active		Test not active, Test active	Test not active	
Contact details, Telephone number	Phone number			0 - 9	Empty	
End the installation assistant?				Yes, back		

[1] See overview of fault codes

D Status codes – Overview

Status code	Meaning
Displays relating to the heat pump system	
S.34	**Heating mode: Frost protection**
S.91	**Service message: Demo mode**
S.100	**Standby**
S.101	**Heating: Compressor switched off**
S.102	**Heating: Compressor blocked**
S.103	**Heating: Flow**
S.104	**Heating: Compressor active**
S.107	**Heating: Overrun**
S.111	**Cooling: Compressor shutdown**
S.112	**Cooling: Compressor blocked**
S.113	**Cooling: Compressor mode flow**
S.114	**Cooling: Compressor active**
S.117	**Cooling: Compressor mode overrun**
S.118	**Cooling: Flow**
S.119	**Cooling: Mixer active**
S.125	**Heating: Heating rod active**
S.131	**Hot water: Compressor shutdown**
S.132	**Hot water: Compressor blocked**
S.133	**Hot water: Flow**
S.134	**Hot water: Compressor active**
S.135	**Hot water: Heating rod active**
S.137	**Hot water: Overrun**

Status code	Meaning
S.141	**Heating: Heating rod shutdown**
S.142	**Heating: Heating rod blocked**
S.151	**Hot water: Heating rod shutdown**
S.152	**Hot water: Heating rod blocked**
General displays	
S.170	**Compressor: Phase failure**
S.171	**Compressor: Incorrect phase seq.**
S.172	**Compressor: ICL fault**
S.173	**Anti-cycling time for the energy supply company**
S.201	**Check program: Purging of env. circuit active**
S.202	**Check program: Purging of building circuit active**
S.203	**Actuator test active**
Displays relating to communication	
S.211	**Connection error: Display not detected**
S.212	**Connection error: Control not detected**
S.215	**Connection error: TMB not recognised**
S.216	**Connection error: ICL not recognised**
Displays relating to the environment circuit	
S.242	**Environment circuit: Outlet temperature too low**
S.246	**Environment circuit: Pressure too low**
S.247	**Env. circuit: Fault contact: Pump open**
S.265	**Environment circuit: Pressure mon. open**
S.266	**Environment cir. inlet temperature too high**
Displays relating to the building circuit	
S.272	**Building circuit: Remaining feed heads limit active**
S.273	**Building circuit: Flow temperature too low**
S.274	**Building circuit: Pressure too low**
S.275	**Building circuit: Flow rate too low**
S.276	**Building cir.: Lockout contact S20 opened**
S.277	**Building circuit: Pump fault**
Displays relating to the refrigeration circuit	
S.302	**High pressure switch opened**
S.303	**Compressor outlet temperature too high**
S.304	**Evaporation temperature too low**
S.305	**Condensation temperature too low**
S.306	**Evaporation temperature too high**
S.308	**Condensation temperature too high**
S.311	**Environment cir. inlet temperature too low**
S.312	**Building circuit inlet Return temperature too low**
S.313	**Environment cir. inlet temperature too high**
S.314	**Building circuit inlet Return temperature too low**
S.240	**Oil temperature too low**
Displays relating to the auxiliary electric heating circuit	

Status code	Meaning
S.350	Heating rod: Safety cut-out open
S.351	Heating rod: Flow temp. too high
S.352	Heating rod: Pressure too low
S.353	Heating rod: Flow rate too low
S.354	Heating rod: Phase failure

E Fault codes

Note
In the event of rare faults which are caused by components in the refrigeration circuit, inform Customer Service.

Code	Meaning	Cause	Remedy
F.070	Invalid Device Specific Number	– Replacing the control PCB and display PCB	– Setting the correct Device Specific Number
F.086	Building circuit: Lockout contact S20 open	– Contact S20 on heat pump mains connection PCB (HMU) open – Incorrect setting of the limit thermostat – Flow temperature sensor (heat pump, gas-fired boiler, system sensor) measures values that deviate downwards	– Adjust the maximum flow temperature for the direct heating circuit via the system controller (observe the upper switch-off threshold for the boilers) – Adjust the set value for the limit thermostat – Check the sensor values
F.514	Temp. sensor fault: Compressor inlet	– Sensor not connected or sensor input has short-circuited	– Check the sensor, and replace if necessary – Replace the cable harness
F.517	Temp. sensor fault: Compressor outlet	– Sensor not connected or sensor input has short-circuited	– Check the sensor, and replace if necessary – Replace the cable harness
F.519	Sensor fault: Building circuit return temp.	– Sensor not connected or sensor input has short-circuited	– Check the sensor, and replace if necessary – Replace the cable harness
F.520	Temp. sensor fault: Building circuit flow	– Sensor not connected or sensor input has short-circuited	– Check the sensor, and replace if necessary – Replace the cable harness
F.532	Building circuit: Flow rate too low	– Stop cock was not opened – Building circuit pump defective – All consumers in the heating system are closed – Flow rate is too low for recording with the volume flow sensor (< 120 l/h)	– Check the stop cocks and thermostatic radiator valves – Ensure that the flow rate is at least 35% of the nominal flow rate – Check that the building circuit pump functions correctly
F.546	Sensor fault: High pressure	– Sensor not connected or sensor input has short-circuited	– Check the sensor (e.g. using an installation aid), and replace if necessary – Replace the cable harness
F.583	Building circuit: Flow temp. too low	– Four-way valve is mechanically blocked – The temperature sensor in the flow is defective – Air in the building circuit	– Check the building circuit flow rate – Check the quality of the plug contact on the PCB and on the cable harness – Check that the sensor is working correctly (measure resistance using sensor characteristic values) – Replace the sensor – Purging the building circuit
F.685	Connection error: Control not detected	– System controller was previously detected but the connection is broken	– Check the eBUS connection to the system controller
F.701	Temp. sensor fault: Environ. circuit inlet	– Sensor not connected or sensor input has short-circuited	– Check the sensor, and replace if necessary – Replace the cable harness

Code	Meaning	Cause	Remedy
F.702	**Temp. sensor fault: Environment cir. out**	– Sensor not connected or sensor input has short-circuited	– Check the sensor, and replace if necessary – Replace the cable harness
F.703	**Sensor fault: Low pressure**	– Sensor not connected or sensor input has short-circuited	– Check the sensor, and replace if necessary – Replace the cable harness
F.704	**Sensor fault: Building cir. pressure**	– Sensor not connected or sensor input has short-circuited	– Check the sensor, and replace if necessary – Replace the cable harness
F.705	**Sensor fault: Enviro. cir. pressure**	– Sensor not connected or sensor input has short-circuited	– Check the sensor, and replace if necessary – Replace the cable harness
F.707	**Connection error: Display not detected**	– Cable not connected or connected incorrectly Operator control panel display defective	– Check the connection line between the mains connection PCB and the display – Replace the display
F.710	**Environment circuit: Outlet temperature too low**	– Environment circuit pump defective – Temperature sensor for environment circuit outlet defective – Volume flow too low in the environment circuit – Air in the environment circuit	– Check the flow rate in the environment circuit – Check the quality of the plug contact on the PCB and on the cable harness – Check that the sensor is working correctly (measure resistance using sensor characteristic values) – Replace the sensor – Check the volume flow of the environment circuit pump (optimum spread of 3 K) – Purging the environment circuit
F.714	**Environment circuit: Pressure too low**	– Pressure loss in the environment circuit due to leaks or air pockets – Environment circuit pressure sensor defective	– Check the environment circuit for leaks – Top up the medium (brine/water), purge – Check the quality of the plug contact on the PCB and on the cable harness – Check that the pressure sensor is working correctly – Replace the pressure sensor
F.715	**Env. circuit: Fault contact: Pump open**	– The electronics system of the high-efficiency pump has detected a fault (e. g. dry running, blockage, overvoltage, undervoltage) and switched the pump off as a securing measure.	– Switch the heat pump off for at least 30 seconds (no current) – Check the quality of the plug contact on the PCB – Check that the pump functions correctly – Purging the environment circuit
F.718	**Fan unit 1: Fan blocked**	– There is no confirmation signal stating that the fan is rotating	– Check the air route and, if required, remove any blockages – Check and, if required, replace the F1 fuse on the PCB in the fan unit (OMU)

F.719	**Fan unit 1: Safety cut-out open**	– The safety cut-out on the de-icer is open due to insufficient volume flow and/or brine temperatures above 70 °C
		– When operating the de-icer outside of the permitted area of application
		  – De-icer operation when the brine circuit is not filled
		  – De-icer operation at brine temperatures above 120 °C trips the fuse of the safety cut-out and requires that the fuse be replaced
			– Check for circulation in the environment circuit pump
			– If required, open the stop cock
			The safety cut-out is automatically reset as soon as the temperature at the fuse falls below 55 °C again.
			If the safety cut-out is still open at a de-icer temperature below 55 °C, temperatures above 120 °C were reached and the fuse tripped.
			– Check and, if required, replace the F1 fuse of the air/brine collector
			– Replace the safety cut-out

Code	Meaning	Cause	Remedy
F.723	**Building circuit: Pressure too low**	– Pressure loss in the building circuit due to leaks or air pockets – Building circuit pressure sensor defective	– Check the building circuit for leaks – Top up with water, purge – Check the quality of the plug contact on the PCB and on the cable harness – Check that the pressure sensor is working correctly – Replace the pressure sensor
F.724	**Sensor fault: Fan unit 1 fan inlet temp.**	– Sensor not connected or sensor input has short-circuited	– Check the sensor in the fan unit, and replace if necessary – Replace the cable harness in the fan unit
F.725	**Sensor fault: Fan unit 1 brine flow temp.**		
F.731	**High pressure switch opened**	– Coolant pressure too high. The integrated high-pressure switch has tripped at 46 bar (g) or 47 bar (abs) – Insufficient energy output via the relevant condenser	– Purging the building circuit – Insufficient volume flow as a result of closing individual room controllers in an underfloor heating system – Check that the dirt filter that is in place is permeable – Refrigerant flow rate too low (e.g. electronic expansion valve defective, four-way valve mechanically blocked, filter blocked). Inform Customer Service. – VWL SA (cooling mode): Check the fan unit for dirt
F.732	**Compressor outlet temperature too high**	The compressor outlet temperature is above 130 °C: – Application limits exceeded – EEV does not work or does not open correctly – Coolant volume too low	– Check the low-pressure sensor, compressor inlet sensor and outlet sensor – Check the EEV (does the EEV move to the limit stop? Use the sensor/actuator test) – Check the refrigerant volume (see Technical data) – Carry out a leak-tightness test

F.733	**Evaporation temperature too low**	– No flow rate in the environment circuit (heating mode)
		– Energy input too low in the environment circuit (heating mode) or building circuit (cooling mode)
			– Check the flow rate in the environment circuit
			– Check the dimensioning of the environment circuit (heating mode) for ground/brine and groundwater/brine
			– If the building circuit contains thermostatic radiator valves, check that they are suitable for cooling mode (cooling mode)
			– VWL_SA (heating mode)
			  – Check the fan unit for dirt
			  – Check the EEV (does the EEV move to the limit stop? Use the sensor/actuator test)
			– Check the low-pressure sensor and compressor inlet sensor

F.734	**Condensation temperature too low**	– Temperature in the building circuit (heating mode) or environment circuit (cooling mode) too low for compressor operation – Coolant volume too low	– Check the EEV (does the EEV move to the limit stop? Use the sensor/actuator test) – Check the compressor inlet sensor, high-pressure sensor and low-pressure sensor – Check the refrigerant volume (see Technical data) – Leak-tightness test

Code	Meaning	Cause	Remedy
F.735	**Evaporation temperature too high**	– Temperature in the environment circuit (heating mode) or building circuit (cooling mode) too high for compressor operation – Feeding of external heat into the environment circuit	– Reduce or stop the external heat that is entering – Check the de-icer (does it heat up even though it is **Off** in the sensor/actuator test?) – Check the EEV (does the EEV move to the limit stop? Use the sensor/actuator test) – Check the compressor inlet sensor and low-pressure sensor
F.737	**Condensation temperature too high**	– Temperature in the building circuit (heating mode) or environment circuit (cooling mode) too high for compressor operation – Coolant volume too high	– Check the EEV (does the EEV move to the limit stop? Use the sensor/actuator test) – Check the compressor inlet sensor, high-pressure sensor and low-pressure sensor – Check the refrigerant volume (see Technical data)
F.740	**Environment cir. inlet temperature too low**	– Inlet temperature in the environment circuit too low for the compressor to start for heating: – Air/brine: Environment circuit inlet temperature < -28 °C – Ground/brine: Environment circuit inlet temperature < -7 °C – Groundwater/brine: Groundwater inlet temperature < 2 °C	– Check the dimensioning of the environment circuit – Check the sensors
F.741	**Building circuit inlet Return temperature too low**	– Return temperature in the building circuit too low for the compressor to start Heating: – Return temperature < 5 °C Cooling: – Return temperature < 10 °C	– Heating: Check that the four-way valve functions correctly
F.742	**Environment cir. inlet temperature too high**	– Inlet temperature in the environment circuit too high for the compressor to start – Brine inlet temperature > 50 °C – Feeding of external heat into the environment circuit	– Heating: Check that the four-way valve functions correctly – Check the environment circuit – Check the sensors – Reduce or stop the external heat that is entering
F.743	**Building circuit inlet Return temperature too high**	– Return temperature in the building circuit too high for the compressor to start Heating: – Return temperature > 55 °C to 60 °C (depending on the brine inlet temperature) Cooling: – Return temperature > 35 °C	– Cooling: Check that the four-way valve functions correctly – Check the sensors
F.783	**Connection error: Terminal block (TMB)**	Cable not connected or connected incorrectly	Check the connection line between the mains connection PCB and the controller PCB
F.784	**Connection error: ICL**	Cable not connected or connected incorrectly	Check the connection line between the mains connection PCB and the in-rush current limiter PCB

Code	Meaning	Cause	Remedy
F.787	**Environment circuit: Pressure mon. open**	– Pressure loss in the environment circuit due to leaks or air pockets – Environment circuit pressure monitor defective	– Check the environment circuit for leaks – Top up the medium (brine/water), purge – Check the screwed contact on the PCB – Check that the pressure monitor works correctly – Replace the pressure monitor
F.788	**Building circuit: Pump fault**	– The electronics system of the high-efficiency pump has detected a fault (e. g. dry running, blockage, over-voltage, undervoltage) and switched the pump off as a securing measure.	– Switch the heat pump off for at least 30 seconds (no current) – Check the quality of the plug contact on the PCB – Check that the pump functions correctly – Purging the building circuit
F.792	**Sensor fault: VI inlet temp.**	– Sensor not connected or sensor input has short-circuited	– Check the sensor, and replace if necessary – Replace the cable harness
F.793	**Sensor fault: EEV-VI outlet temp.**	– Sensor not connected or sensor input has short-circuited	– Check the sensor, and replace if necessary – Replace the cable harness
F.797	**Sensor fault: Cooling flow temp.**	– Sensor not connected or sensor input has short-circuited	– Check the sensor, and replace if necessary – Replace the cable harness
F.798	**Sensor fault: Well inlet temp.**	– Sensor not connected or sensor input has short-circuited	– Check the sensor, and replace if necessary – Replace the cable harness
F.799	**Sensor fault: Well outlet temp.**	– Sensor not connected or sensor input has short-circuited	– Check the sensor, and replace if necessary – Replace the cable harness
F.1100	**Heating rod: Safety cut-out open**	The safety cut-out on the auxiliary electric heater is open due to: – Insufficient volume flow or air in the building circuit – Heating rod operation when the building circuit is not filled – Heating rod operation at flow temperatures above 110 °C trips the fuse of the safety cut-out and requires that the fuse be replaced – Feeding of external heat into the building circuit	– Check the circulation in the building circuit pump – If required, open the stop cock. The safety cut-out is automatically reset as soon as the temperature at the fuse falls below 55 °C again. Also press reset. If the safety cut-out is still open at an auxiliary electric heater temperature below 55 °C, temperatures above 110 °C were reached and the fuse tripped. – Replace the safety cut-out – Reduce or stop the external heat that is entering
F.1117	**Compressor: Phase failure**	– In-rush current limiter defective or incorrectly connected – Defective fuse – Poorly tightened electrical connections – Mains voltage too low – Compressor/low tariff power supply not connected – Blocked by energy supply company for over three hours	– Check the fuse – Check the electrical connections – Measure voltage at the heat pump electrical connection – Reduce energy supply company anti-cycling time to under three hours
F.1118	**Compressor: Incorrect phase seq.**	– Incorrect order of phase connection to the mains supply – In-rush current limiter defective or incorrectly connected	– Change the phase order by switching over two phases at a time on the mains supply – Check the in-rush current limiter

Code	Meaning	Cause	Remedy
F.1119	**Compressor: ICL fault**	– In-rush current limiter defective or incorrectly connected – Mains voltage too low	– Check all plug contacts – Checking the ICL compressor connection – Check the ICL controller PCB connection – Replace the ICL
F.1120	**Heating rod: Phase failure**	– The circuit breaker in the electronics box has been triggered. – Auxiliary electric heater defective – Poorly tightened electrical connections – Mains voltage too low – Blocked by energy supply company for over five hours	– Check the auxiliary electric heater and its power supply, and reset the circuit breaker – Check the electrical connections – Measure the voltage at the electrical connection for the auxiliary electric heater

F Characteristic values for the VR 10 external temperature sensor

Temperature (°C)	Resistance (ohms)
-40	87879
-35	63774
-30	46747
-25	34599
-20	25848
-15	19484
-10	14814
-5	11358
0	8778
5	6836
10	5363
15	4238
20	3372
25	2700
30	2176
35	1764
40	1439
45	1180
50	973
55	807
60	672
65	562
70	473
75	400
80	339
85	289
90	247
95	212
100	183
105	158
110	137
115	120
120	104
125	92

Temperature (°C)	Resistance (ohms)
130	81
135	71
140	63
145	56
150	50
155	44

G Characteristic values for internal temperature sensors

Temperature (°C)	Resistance (ohms)
-40	327344
-35	237193
-30	173657
-25	128410
-20	95862
-15	72222
-10	54892
-5	42073
0	32510
5	25316
10	19862
15	15694
20	12486
25	10000
30	8060
35	6535
40	5330
45	4372
50	3605
55	2989
60	2490
65	2084
70	1753
75	1481
80	1256
85	1070
90	916
95	786
100	678
105	586
110	509
115	443
120	387
125	339
130	298
135	263
140	232
145	206
150	183

H Characteristic values for the VRC DCF outdoor temperature sensor

Temperature (°C)	Resistance (ohms)
-25	2167
-20	2067
-15	1976
-10	1862
-5	1745
0	1619
5	1494
10	1387
15	1246
20	1128
25	1020
30	920
35	831
40	740

spares & parts online IBASIS.CO.UK

I Heat pump schematic

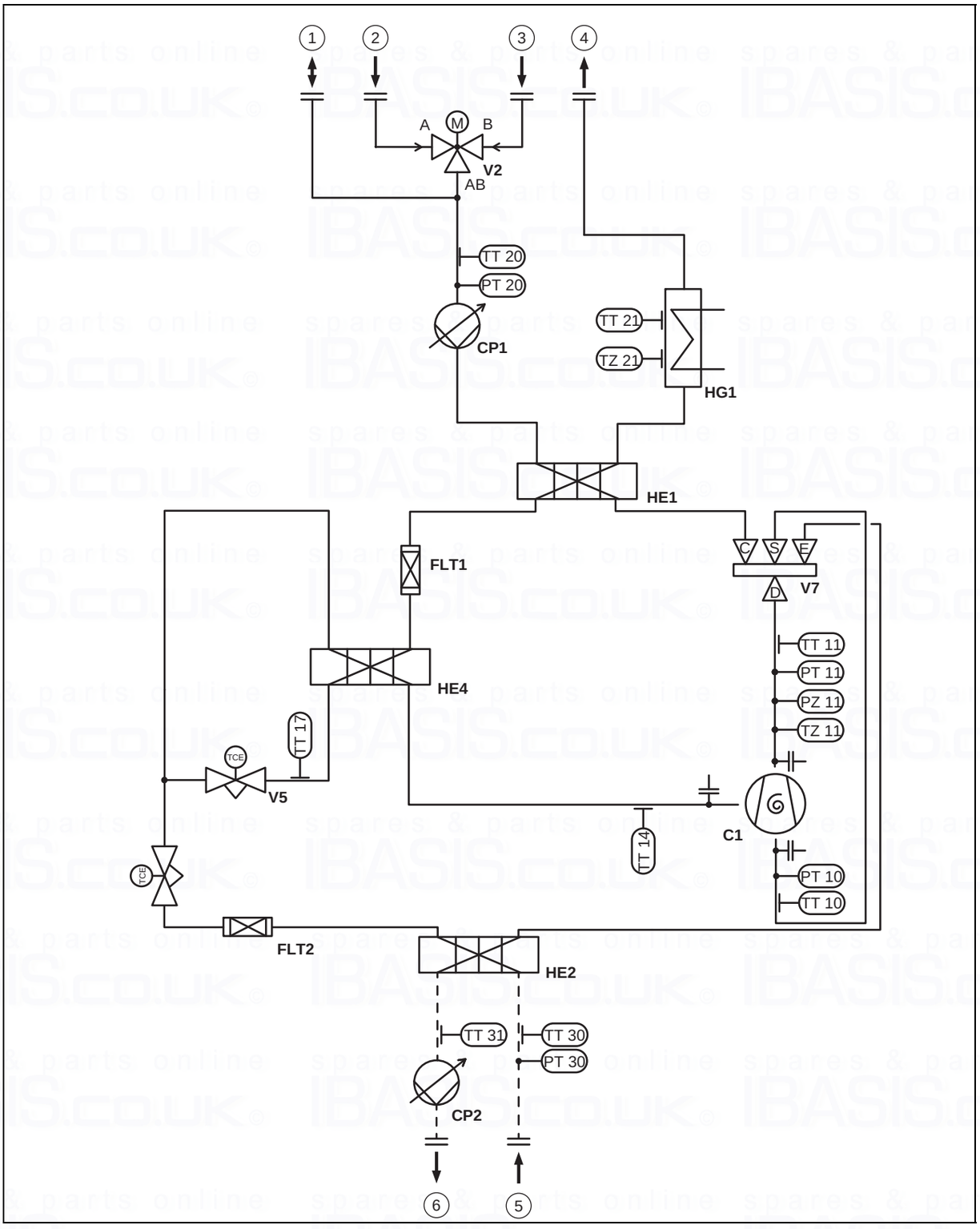

1	Heating circuit diaphragm expansion tank connection	C1	Compressor
2	Circulation connection	CP1	Heating pump
3	Heating return	CP2	Brine pump
4	Heating flow	FLT1	Filter
5	Hot brine	FLT2	Filter
6	Cold brine	HE1	Condenser

HE2	Evaporator
HE4	Evaporator for intermediate injection
HG1	Auxiliary electric heater
PT10	Low-pressure sensor
PT11	High-pressure sensor
PT20	Heating circuit pressure sensor
PT30	Brine pressure sensor
PZ11	High-pressure switch
TT10	Compressor inlet temperature sensor
TT11	Compressor outlet temperature sensor
TT14	Intermediate injection compressor inlet temperature sensor
TT17	Electronic expansion valve outlet temperature sensor
TT20	Heating return temperature sensor
TT21	Heating flow temperature sensor
TT30	Source inlet temperature sensor
TT31	Source outlet temperature sensor
TZ11	Compressor outlet temperature switch
TZ21	Safety cut-out temperature switch
V1	Electronic expansion valve
V2	3-way valve for hot water
V5	Electronic expansion valve for intermediate injection
V7	4-2-way valve

J Commissioning Checklist

Applicability: Great Britain

Benchmark Commissioning and Servicing Section

It is a requirement that the boiler is installed and commissioned to the manufacturers instructions and the data fields on the commissioning checklist completed in full.

To instigate the boiler guarantee the boiler needs to be registered with the manufacturer within one month of the installation.

To maintain the boiler guarantee it is essential that the boiler is serviced annually by a Gas Safe registered engineer who has been trained on the boiler installed. The service details should be recorded on the Benchmark Service Interval Record and left with the householder.

benchmark
COLLECTIVE MARK
THE MARK OF QUALITY FOR THE INSTALLATION, COMMISSIONING AND SERVICING OF DOMESTIC HEATING AND HOT WATER SYSTEMS

www.centralheating.co.uk

© Heating and Hotwater Industry Council (HHIC)

AIR TO WATER HEAT PUMP COMMISSIONING CHECKLIST

This Commissioning Checklist is to be completed in full by the competent person who commissioned the heat pump and associated equipment as a means of demonstrating compliance with the appropriate Building Regulations and then handed to the customer to keep for future reference.

Failure to install and commission this equipment to the manufacturer's instructions may invalidate the warranty but does not affect statutory rights.

Customer name:	Telephone number:
Address:	
Heat Pump Make and Model	
Heat Pump Serial Number	
Commissioned by (PRINT NAME):	Certified Operative Reg. No. [1]
Company name:	Telephone number:
Company address:	
	Commissioning date:
Building Regulations Notification Number (if applicable) [2]	

CONTROLS - SYSTEM AND HEAT PUMP (tick the appropriate boxes)				
Time and temperature control to heating	Room thermostat and programmer/timer		Programmable Roomstat	
	Load/weather compensation		Optimum start control	
Time and temperature control to hot water	Cylinder thermostat and programmer/timer		Combined with Heat pump main controls	
Heating zone valves (including underfloor loops)	Fitted		Not required	
Hot water zone valves	Fitted		Not required	
Thermostatic radiator valves	Fitted		Not required	
Heat Pump Safety Interlock [3]	Built In		Provided	
Outdoor Sensor	Fitted		Not required	
Automatic bypass to system	Fitted		Not required	
Buffer Vessel Fitted	Yes		No		If YES	Volume:		Litres

ALL SYSTEMS		
The heating system has been filled and pressure tested	Yes	
Expansion vessel for heating is sized, fitted & charged in accordance with manufacturer's instructions	Yes	
The heat pump is fitted on a solid/stable surface capable of taking its weight	Yes	
The system has been flushed and cleaned in accordance with BS7593 and heat pump manufacturer's instructions	Yes	
What system cleaner was used?		
What inhibitor was used?	Quantity	litres
Is the system adequately frost protected?	Yes	

OUTDOOR UNIT		
Are all external pipeworks insulated?	Yes	
Is the fan free from obstacles and operational?	Yes	
Has suitable consideration been made for waste water discharge?	Yes	

CENTRAL HEATING MODE					
Heating Flow Temperature		°C	Heating Return Temperature		°C

DOMESTIC HOT WATER MODE Measure and Record:									
Is the heat pump connected to a hot water cylinder?		Unvented		Vented		Thermal Store		Not Connected	
Hot water has been checked at all outlets		Yes	Have Thermostatic Blending Valves been fitted?		Yes		Not required		

ADDITIONAL SYSTEM INFORMATON										
Additional heat sources connected:		Gas Boiler		Oil Boiler		Electric Heater		Solar Thermal	Other:	

ALL INSTALLATIONS		
The heating, hot water and ventilation systems complies with the appropriate Building Regulations	Yes	
All electrical work complies with the appropriate Regulations	Yes	
The heat pump and associated products have been installed and commissioned in accordance with the manufacturer's instructions	Yes	
The operation of the heat pump and system controls have been demonstrated to the customer	Yes	
The manufacturer's literature, including Benchmark Checklist and Service Record, has been explained and left with the customer	Yes	

Commissioning Engineer's Signature
Customer's Signature
(To confirm satisfactory demonstration and receipt of manufacturer's literature)

Notes: [1] Installers should be members of an appropriate Competent Persons Scheme. [2] All installations in England and Wales must be notified to Local Area Building Control (LABC) either directly or through a Competent Persons Scheme. A Building Regulations Compliance Certificate will then be issued to the customer. [3] May be required for systems covered by G3 Regulations

benchmark COLLECTIVE MARK
THE MARK OF QUALITY FOR THE INSTALLATION, COMMISSIONING AND SERVICING OF DOMESTIC HEATING AND HOT WATER SYSTEMS

© Heating and Hotwater Industry Council (HHIC)

www.centralheating.co.uk

SERVICE RECORD

It is recommended that your heating system is serviced regularly and that the appropriate Service Interval Record is completed.

Service Provider

Before completing the appropriate Service Record below, please ensure you have carried out the service as described in the manufacturer's instructions. Always use the manufacturer's specified spare part when replacing controls.

SERVICE 01	Date:
Engineer name:	
Company name:	
Telephone No:	
Operative ID No:	
Comments:	
Signature	

SERVICE 02	Date:
Engineer name:	
Company name:	
Telephone No:	
Operative ID No:	
Comments:	
Signature	

SERVICE 03	Date:
Engineer name:	
Company name:	
Telephone No:	
Operative ID No:	
Comments:	
Signature	

SERVICE 04	Date:
Engineer name:	
Company name:	
Telephone No:	
Operative ID No:	
Comments:	
Signature	

SERVICE 05	Date:
Engineer name:	
Company name:	
Telephone No:	
Operative ID No:	
Comments:	
Signature	

SERVICE 06	Date:
Engineer name:	
Company name:	
Telephone No:	
Operative ID No:	
Comments:	
Signature	

SERVICE 07	Date:
Engineer name:	
Company name:	
Telephone No:	
Operative ID No:	
Comments:	
Signature	

SERVICE 08	Date:
Engineer name:	
Company name:	
Telephone No:	
Operative ID No:	
Comments:	
Signature	

SERVICE 09	Date:
Engineer name:	
Company name:	
Telephone No:	
Operative ID No:	
Comments:	
Signature	

SERVICE 10	Date:
Engineer name:	
Company name:	
Telephone No:	
Operative ID No:	
Comments:	
Signature	

K Commissioning Checklist

Applicability: Great Britain

Benchmark Commissioning and Servicing Section

It is a requirement that the boiler is installed and commissioned to the manufacturers instructions and the data fields on the commissioning checklist completed in full.

To instigate the boiler guarantee the boiler needs to be registered with the manufacturer within one month of the installation.

To maintain the boiler guarantee it is essential that the boiler is serviced annually by a Gas Safe registered engineer who has been trained on the boiler installed. The service details should be recorded on the Benchmark Service Interval Record and left with the householder.

benchmark
COLLECTIVE MARK
THE MARK OF QUALITY FOR THE INSTALLATION, COMMISSIONING AND SERVICING OF DOMESTIC HEATING AND HOT WATER SYSTEMS

www.centralheating.co.uk

© Heating and Hotwater Industry Council (HHIC)

GROUND SOURCE HEAT PUMP COMMISSIONING CHECKLIST

This Commissioning Checklist is to be completed in full by the competent person who commissioned the heat pump and associated equipment as a means of demonstrating compliance with the appropriate Building Regulations and then handed to the customer to keep for future reference.

Failure to install and commission this equipment to the manufacturer's instructions may invalidate the warranty but does not affect statutory rights.

Customer name:	Telephone number:
Address:	
Heat Pump Make and Model	
Heat Pump Serial Number	
Commissioned by (PRINT NAME):	Certified Operative Reg. No. [1]
Company name:	Telephone number:
Company address:	
	Commissioning date:
Building Regulations Notification Number (if applicable) [2]	

CONTROLS - SYSTEM AND HEAT PUMP (tick the appropriate boxes)				
Time and temperature control to heating	Room thermostat and programmer/timer		Programmable Roomstat	
	Load/weather compensation		Optimum start control	
Time and temperature control to hot water	Cylinder thermostat and programmer/timer		Combined with Heat pump main controls	
Heating zone valves (including underfloor loops)	Fitted		Not required	
Hot water zone valves	Fitted		Not required	
Thermostatic radiator valves	Fitted		Not required	
Heat Pump Safety Interlock [3]	Built In		Provided	
Outdoor Sensor	Fitted		Not required	
Automatic bypass to system	Fitted		Not required	
Buffer Vessel Fitted	Yes		No		If YES	Volume:		Litres

ALL SYSTEMS		
The heating system has been filled and pressure tested	Yes	
Expansion vessel for heating is sized, fitted & charged in accordance with manufacturer's instructions	Yes	
The heat pump is fitted on a solid/stable surface capable of taking its weight	Yes	
The system has been flushed and cleaned in accordance with BS7593 and heat pump manufacturer's instructions	Yes	
What system cleaner was used?		
What inhibitor was used?	Quantity	litres
Are all exposed external pipeworks insulated?	Yes	

BORE HOLE/GROUND LOOPS				
Bore Hole	Ground Loop	Length/Depth		m
The ground loops/bore hole pipes have been filled and pressure tested in accordance with relevant British Standards		Yes		
If more than one 1 collector has been used has the system been hydraulically balanced (Flow balancing/regulating valves fitted & adjusted)?		Yes		
Has the system been vented/de-aired?		Yes		
Are system filters fitted & clean?		Yes		
Is the system topped up to the correct level?		Yes		
Was the system cleaned & flushed prior to use?		Yes		
Are isolating valves in their correct position		Yes		
What system cleaner was used?	Qty		litres	
What antifreeze was used?	Qty		litres	
What temperature will the antifreeze protect to?			°C	
What inhibitor was used (if not included in Antifreeze)?	Qty		litres	
Record incoming collector fluid temperature			°C	
Record outgoing collector fluid temperature			°C	

CENTRAL HEATING MODE Measure and Record					
Heating Flow Temperature		°C	Heating Return Temperature		°C

DOMESTIC HOT WATER MODE Measure and Record:								
Is the heat pump connected to a hot water cylinder?		Unvented		Vented		Thermal Store		Not Connected
Hot water has been checked at all outlets		Yes	Have Thermostatic Blending Valves been fitted?		Yes		Not required	

ADDITIONAL SYSTEM INFORMATON									
Additional heat sources connected:		Gas Boiler		Oil Boiler		Electric Heater		Solar Thermal	Other:

ALL INSTALLATIONS		
The heating, hot water and ventilation systems complies with the appropriate Building Regulations	Yes	
All electrical work complies with the appropriate Regulations		
The heat pump and associated products have been installed and commissioned in accordance with the manufacturer's instructions	Yes	
The operation of the heat pump and system controls have been demonstrated to the customer	Yes	
The manufacturer's literature, including Benchmark Checklist and Service Record, has been explained and left with the customer	Yes	

Commissioning Engineer's Signature
Customer's Signature
(To confirm satisfactory demonstration and receipt of manufacturer's literature)

Notes: [1] Installers should be members of an appropriate Competent Persons Scheme. [2] All installations in England and Wales must be notified to Local Area Building Control (LABC) either directly or through a Competent Persons Scheme. A Building Regulations Compliance Certificate will then be issued to the customer. [3] May be required for systems covered by G3 Regulations

benchmark COLLECTIVE MARK
THE MARK OF QUALITY FOR THE INSTALLATION, COMMISSIONING AND SERVICING OF DOMESTIC HEATING AND HOT WATER SYSTEMS

© Heating and Hotwater Industry Council (HHIC)

www.centralheating.co.uk

SERVICE RECORD

It is recommended that your heating system is serviced regularly and that the appropriate Service Interval Record is completed.

Service Provider

Before completing the appropriate Service Interval Record below, please ensure you have carried out the service as described in the manufacturer's instructions. Always use the manufacturer's specified spare part when replacing controls.

SERVICE 01	Date:
Engineer name:	
Company name:	
Telephone No:	
Operative ID No:	
Comments:	
Signature	

SERVICE 02	Date:
Engineer name:	
Company name:	
Telephone No:	
Operative ID No:	
Comments:	
Signature	

SERVICE 03	Date:
Engineer name:	
Company name:	
Telephone No:	
Operative ID No:	
Comments:	
Signature	

SERVICE 04	Date:
Engineer name:	
Company name:	
Telephone No:	
Operative ID No:	
Comments:	
Signature	

SERVICE 05	Date:
Engineer name:	
Company name:	
Telephone No:	
Operative ID No:	
Comments:	
Signature	

SERVICE 06	Date:
Engineer name:	
Company name:	
Telephone No:	
Operative ID No:	
Comments:	
Signature	

SERVICE 07	Date:
Engineer name:	
Company name:	
Telephone No:	
Operative ID No:	
Comments:	
Signature	

SERVICE 08	Date:
Engineer name:	
Company name:	
Telephone No:	
Operative ID No:	
Comments:	
Signature	

SERVICE 09	Date:
Engineer name:	
Company name:	
Telephone No:	
Operative ID No:	
Comments:	
Signature	

SERVICE 10	Date:
Engineer name:	
Company name:	
Telephone No:	
Operative ID No:	
Comments:	
Signature	

L Technical data

L.1 General

Dimensions

	VWF 57/4 230 V	VWF 87/4 230 V	VWF 117/4 230 V
Product dimensions, height, without adjustable feet	1,183 mm	1,183 mm	1,183 mm
Product dimensions, width	595 mm	595 mm	595 mm
Product dimensions, depth	600 mm	600 mm	600 mm
Weight, with packaging	161 kg	176 kg	188 kg
Weight, without packaging	151 kg	166 kg	178 kg
Weight, ready for operation	157 kg	173 kg	185 kg

Electrics

	VWF 57/4 230 V	VWF 87/4 230 V	VWF 117/4 230 V
Compressor/heating circuit/control circuit rated voltage	– 1~/N/PE 230 V 50 Hz – 2~/PE 230 V 50 Hz	– 1~/N/PE 230 V 50 Hz – 2~/PE 230 V 50 Hz	– 1~/N/PE 230 V 50 Hz – 2~/PE 230 V 50 Hz
Auxiliary heater rated voltage	– 1~/N/PE 230 V 50 Hz – 3~/PE 230 V 50 Hz	– 1~/N/PE 230 V 50 Hz – 3~/PE 230 V 50 Hz	– 1~/N/PE 230 V 50 Hz – 3~/PE 230 V 50 Hz
Power factor	cos φ = 0.75 – 0.9	cos φ = 0.75 – 0.9	cos φ = 0.75 – 0.9
Power factor for the auxiliary heater	cos φ = 1	cos φ = 1	cos φ = 1
Required network impedance Z_{max} with in-rush current limiter	≤ 0.472 Ω	≤ 0.472 Ω	≤ 0.472 Ω
Required network impedance Z_{max} for auxiliary heater	≤ 0.472 Ω	≤ 0.472 Ω	≤ 0.472 Ω
Fuse type, characteristic C, slow-blow, three-pole switching (disconnection of the three mains connection lines in one switching operation)	Designing in accordance with the selected connection diagrams	Designing in accordance with the selected connection diagrams	Designing in accordance with the selected connection diagrams
Optional on-site residual-current circuit breaker	RCCB type A (type A pulse-current-sensitive residual-current circuit breakers) or RCCB type B (type B universal-current-sensitive residual-current circuit breakers)	RCCB type A (type A pulse-current-sensitive residual-current circuit breakers) or RCCB type B (type B universal-current-sensitive residual-current circuit breakers)	RCCB type A (type A pulse-current-sensitive residual-current circuit breakers) or RCCB type B (type B universal-current-sensitive residual-current circuit breakers)
In-rush current with in-rush current limiter	≤ 15 A	≤ 19 A	≤ 60 A
Measuring current L1 for compressor and electronics (connection diagram 1)	11.9 A	19.1 A	24.9 A
Measuring current L1 for the compressor and electronics plus maximum 1.3 A at X12 VR 40, maximum 0.9 A at X14 circulation pump and maximum 2.5 A at TB X141, X143, X144 and X145 (connection diagram 1)	16.6 A	23.8 A	29.6 A
Measuring current L1 & L2 for compressor and electronics (L1 = L2) (connection diagram 2)	11.9 A	19.1 A	24.9 A
Measuring current L1 & L2 for the compressor and electronics plus maximum 1.3 A at X12 VR 40, maximum 0.9 A at X14 circulation pump and maximum 2.5 A at TB X141, X143, X144 and X145 (L1 = L2) (connection diagram 2)	16.6 A	23.8 A	29.6 A
Min. electrical power consumption of compressor	1.40 kW	2.10 kW	2.60 kW
Max. electrical power consumption of compressor	2.10 kW	3.10 kW	4.10 kW

	VWF 57/4 230 V	VWF 87/4 230 V	VWF 117/4 230 V
Output levels for the auxiliary electric heater (connection diagram 1; connection diagram 2)	– 2.0 / 3.5 / 5.5 kW – 2.0 / 3.5 / 5.5 / 7.0 / 9.0 kW	– 2.0 / 3.5 / 5.5 kW – 2.0 / 3.5 / 5.5 / 7.0 / 9.0 kW	– 2.0 / 3.5 / 5.5 kW – 2.0 / 3.5 / 5.5 / 7.0 / 9.0 kW
EN 60529 level of protection	IP 10B	IP 10B	IP 10B

Hydraulics

	VWF 57/4 230 V	VWF 87/4 230 V	VWF 117/4 230 V
Heating flow/return connection	G 1 1/2 ″	G 1 1/2 ″	G 1 1/2 ″
Heat source flow/return connection	G 1 1/2 ″	G 1 1/2 ″	G 1 1/2 ″
Heating expansion vessel connection	G 3/4 ″	G 3/4 ″	G 3/4 ″

Heat source circuit/brine circuit

	VWF 57/4 230 V	VWF 87/4 230 V	VWF 117/4 230 V
Brine content of the brine circuit in the heat pump	2.5 l	3.1 l	3.6 l
Brine circuit materials	– Cu – CuZn Alloy – Stainless Steel – EPDM – Brass – Fe	– Cu – CuZn Alloy – Stainless Steel – EPDM – Brass – Fe	– Cu – CuZn Alloy – Stainless Steel – EPDM – Brass – Fe
Min. brine fluid operating pressure	≥ 0.07 MPa (≥ 0.70 bar)	≥ 0.07 MPa (≥ 0.70 bar)	≥ 0.07 MPa (≥ 0.70 bar)
Max. brine fluid operating pressure	≤ 0.3 MPa (≤ 3.0 bar)	≤ 0.3 MPa (≤ 3.0 bar)	≤ 0.3 MPa (≤ 3.0 bar)
Max. electrical power consumption, brine circuit pump	76 W	76 W	130 W
Brine pump type	High-efficiency pump	High-efficiency pump	High-efficiency pump

Building circuit/heating circuit

	VWF 57/4 230 V	VWF 87/4 230 V	VWF 117/4 230 V
Heating circuit water contents in the heat pump	3.2 l	3.9 l	4.4 l
Heating circuit materials	– Cu – CuZn-Alloy – Stainless Steel – EPDM – Brass – Fe	– Cu – CuZn-Alloy – Stainless Steel – EPDM – Brass – Fe	– Cu – CuZn-Alloy – Stainless Steel – EPDM – Brass – Fe
Permissible heating water condition	Do not add frost or corrosion protection agents to heating water. Soften the heating water at water hardnesses from **3.0 mmol/l (16.8° dH)** in accordance with Directive VDI 2035 Sheet 1.	Do not add frost or corrosion protection agents to heating water. Soften the heating water at water hardnesses from **3.0 mmol/l (16.8° dH)** in accordance with Directive VDI 2035 Sheet 1.	Do not add frost or corrosion protection agents to heating water. Soften the heating water at water hardnesses from **3.0 mmol/l (16.8° dH)** in accordance with Directive VDI 2035 Sheet 1.
Min. heating circuit operating pressure	≥ 0.07 MPa (≥ 0.70 bar)	≥ 0.07 MPa (≥ 0.70 bar)	≥ 0.07 MPa (≥ 0.70 bar)
Max. heating circuit operating pressure	≤ 0.3 MPa (≤ 3.0 bar)	≤ 0.3 MPa (≤ 3.0 bar)	≤ 0.3 MPa (≤ 3.0 bar)
Min. heating mode flow temperature	25 °C	25 °C	25 °C
Max. heating mode target flow temperature with compressor	65 °C	65 °C	65 °C
Max. heating mode target flow temperature with auxiliary electric heater	75 °C	75 °C	75 °C
Min. cooling mode flow temperature	5 °C	5 °C	5 °C

	VWF 57/4 230 V	VWF 87/4 230 V	VWF 117/4 230 V
Max. electrical power consumption, heating pump	63 W	63 W	63 W
Heating pump type	High-efficiency pump	High-efficiency pump	High-efficiency pump

Refrigeration circuit

	VWF 57/4 230 V	VWF 87/4 230 V	VWF 117/4 230 V
Coolant type	R410A	R410A	R410A
Coolant content of the coolant circuit in the heat pump	1.50 kg	2.40 kg	2.50 kg
Global warming potential (GWP) in accordance with regulation (EU) no. 517/2014	2088	2088	2088
CO_2 equivalent	3132	5011	5220
Global warming potential 100 (GWP_{100}) in accordance with regulation (EC) no. 842/2006	1975	1975	1975
Expansion valve design	Electronic	Electronic	Electronic
Permissible operating pressure (relative)	≤ 4.6 MPa (≤ 46.0 bar)	≤ 4.6 MPa (≤ 46.0 bar)	≤ 4.6 MPa (≤ 46.0 bar)
Compressor type	Scroll	Scroll	Scroll
Oil type	Ester (EMKARATE RL32-3MAF)	Ester (EMKARATE RL32-3MAF)	Ester (EMKARATE RL32-3MAF)
Oil filling quantity	0.74 l	1.25 l	1.25 l

Installation site

	VWF 57/4 230 V	VWF 87/4 230 V	VWF 117/4 230 V
Installation site	Interior/dry	Interior/dry	Interior/dry
Installation room volume complying with EN 378	3.41 m³	5.45 m³	5.68 m³
Permissible ambient temperature at the installation site	7 … 25 °C	7 … 25 °C	7 … 25 °C
Permissible relative air humidity	40 … 75 %	40 … 75 %	40 … 75 %

L.2 Brine heat source

Heat source circuit/brine circuit

	VWF 57/4 230 V	VWF 87/4 230 V	VWF 117/4 230 V
Min. source inlet temperature (hot brine) in heating mode	−10 °C	−10 °C	−10 °C
Max. source inlet temperature (hot brine) in heating mode	25 °C	25 °C	25 °C
Min. source inlet temperature (hot brine) in cooling mode	0 °C	0 °C	0 °C
Max. source inlet temperature (hot brine) in cooling mode	30 °C	30 °C	30 °C
Nominal flow ΔT 3 K for B0/W35	1,300 l/h	2,110 l/h	2,870 l/h
Min. volume flow during continuous operation at the application limits	1,190 l/h	1,990 l/h	2,570 l/h
Max. volume flow during continuous operation at the application limits	1,300 l/h	2,110 l/h	2,870 l/h
Max. remaining feed head with ΔT 3 K for B0/W35	0.063 MPa (0.630 bar)	0.041 MPa (0.410 bar)	0.055 MPa (0.550 bar)
Brine circuit pump electrical power consumption for B0/W35 ΔT 3 K with an external pressure loss of 250 mbar in the brine circuit	49 W	78 W	80 W
Brine fluid type	Ethylene glycol 30% vol.	Ethylene glycol 30% vol.	Ethylene glycol 30% vol.

Building circuit/heating circuit

	VWF 57/4 230 V	VWF 87/4 230 V	VWF 117/4 230 V
Nominal flow at ΔT 5 K	930 l/h	1,450 l/h	1,930 l/h
Max. remaining feed head with ΔT 5 K	0.065 MPa (0.650 bar)	0.044 MPa (0.440 bar)	0.03 MPa (0.30 bar)
Nominal flow with ΔT 8 K	600 l/h	930 l/h	1,290 l/h
Max. remaining feed head with ΔT 8 K	0.068 MPa (0.680 bar)	0.065 MPa (0.650 bar)	0.054 MPa (0.540 bar)
Max. volume flow during continuous operation at the application limits	930 l/h	1,450 l/h	1,930 l/h
Heating pump electrical power consumption for B0/W35 ΔT 3 K with an external pressure loss of 250 mbar in the heating circuit	24 W	37 W	49 W

Performance data

The following performance data is applicable to new products with clean heat exchangers.

	VWF 57/4 230 V	VWF 87/4 230 V	VWF 117/4 230 V
Heating output B0/W35 ΔT 5 K	5.40 kW	8.40 kW	11.50 kW
Power consumption B0/W35 ΔT 5 K	1.40 kW	2.10 kW	2.80 kW
Output figure B0/W35 ΔT 5 K/coefficient of performance EN 14511	4.50	4.40	4.60
Heating output B0/W45 ΔT 5 K	5.30 kW	8.50 kW	11.40 kW
Power consumption B0/W45 ΔT 5 K	1.70 kW	2.60 kW	3.50 kW
Output figure B0/W45 ΔT 5 K/coefficient of performance EN 14511	3.50	3.50	3.50
Heating output B0/W55 ΔT 8 K	5.40 kW	8.70 kW	11.70 kW
Power consumption B0/W55 ΔT 8 K	2.00 kW	3.10 kW	4.10 kW
Output figure B0/W55 ΔT 8 K/coefficient of performance EN 14511	2.90	3.00	3.10
Sound power level B0/W35 EN 12102/EN 14511 L_{WI} in heating mode	43.8 dB(A)	45.6 dB(A)	48.5 dB(A)
Sound power level B0/W45 EN 12102/EN 14511 L_{WI} in heating mode	43.1 dB(A)	48.6 dB(A)	52.7 dB(A)
Sound power level B0/W55 EN 12102/EN 14511 L_{WI} in heating mode	44.9 dB(A)	53.5 dB(A)	51.3 dB(A)

Application limits for the heat pump: Heating (heat source = brine)

- At the same volume flow rates in the heating circuit (ΔT 5 K or ΔT 8 K) and the brine circuit (ΔT 3 K). Operation of the pump outside the application limits results in the heat pump being switched off by the internal control and safety devices.
- Application limits for the heat pump: Heating (Brine heat source):
  - B15/W65
  - B25/W59
  - B25/W25
  - B−10/W25
  - B−10/W60
  - B−5/W65

L.3 Groundwater heat source

Heat source circuit/brine circuit and groundwater circuit

	VWF 57/4 230 V	VWF 87/4 230 V	VWF 117/4 230 V
Heat source module	VWW 11/4 SI	VWW 11/4 SI	VWW 11/4 SI
Min. source inlet temperature (hot water) in heating mode	10 °C	10 °C	10 °C
Max. source inlet temperature (hot water) in heating mode	25 °C	25 °C	25 °C
Nominal flow of groundwater at ΔT 3 K with W10W35	1,300 l/h	2,160 l/h	3,100 l/h
Brine fluid type	Ethylene glycol 30% vol.	Ethylene glycol 30% vol.	Ethylene glycol 30% vol.

Building circuit/heating circuit

	VWF 57/4 230 V	VWF 87/4 230 V	VWF 117/4 230 V
Heat source module	VWW 11/4 SI	VWW 11/4 SI	VWW 11/4 SI
Nominal flow at ΔT 5 K	1,025 l/h	1,730 l/h	2,270 l/h
Max. remaining feed head with ΔT 5 K	0.08 MPa (0.80 bar)	0.2193 MPa (2.1930 bar)	0.4224 MPa (4.2240 bar)
Nominal flow with ΔT 8 K	710 l/h	1,120 l/h	1,510 l/h
Max. remaining feed head with ΔT 8 K	0.062 MPa (0.620 bar)	0.2103 MPa (2.1030 bar)	0.4045 MPa (4.0450 bar)
Min. volume flow during continuous operation at the application limits	710 l/h	1,120 l/h	1,510 l/h
Max. volume flow during continuous operation at the application limits	1,025 l/h	1,730 l/h	2,270 l/h
Heating pump electrical power consumption for W10/W35 ΔT 5 K with an external pressure loss of 250 mbar in the heating circuit	24 W	37 W	49 W

Performance data

The following performance data is applicable to new products with clean heat exchangers.

Check conditions for determining the performance data in accordance with EN 14511

Installation: Connection lines on the heat source side between VWF xx/4 and VWW xx/4 SI = 2 x 2 m (pipe internal diameter = 32 mm), environment circuit pump setting: Heating mode: Factory setting (auto), Cooling mode: Factory setting (auto)

	VWF 57/4 230 V	VWF 87/4 230 V	VWF 117/4 230 V
Heat source module	VWW 11/4 SI	VWW 11/4 SI	VWW 11/4 SI
Heating output W10/W35 ΔT 5 K	5.90 kW	9.90 kW	13.10 kW
Power consumption W10/W35 ΔT 5 K	1.30 kW	2.00 kW	2.70 kW
Output figure W10/W35 ΔT 5 K/coefficient of performance EN 14511	4.60	4.80	4.70
Heating output W10/W45 ΔT 5 K	6.50 kW	9.90 kW	13.40 kW
Power consumption W10/W45 ΔT 5 K	1.70 kW	2.60 kW	3.40 kW
Output figure W10/W45 ΔT 5 K/coefficient of performance EN 14511	4.00	3.80	3.90
Heating output W10/W55 ΔT 8 K	6.60 kW	10.30 kW	13.80 kW
Power consumption W10/W55 ΔT 8 K	2.00 kW	3.10 kW	4.00 kW
Output figure W10/W55 ΔT 8 K/coefficient of performance EN 14511	3.30	3.30	3.40
Sound power level W10/W35 EN 12102/EN 14511 L_{WI} in heating mode	43.3 dB(A)	46.9 dB(A)	50.0 dB(A)
Sound power level W10/W45 EN 12102/EN 14511 L_{WI} in heating mode	45.4 dB(A)	49.4 dB(A)	50.7 dB(A)
Sound power level W10/W55 EN 12102/EN 14511 L_{WI} in heating mode	45.7 dB(A)	52.6 dB(A)	52.6 dB(A)

Application limits for the heat pump: Heating (heat source = groundwater)

- At the same volume flow rates in the heating circuit (ΔT 5 K or ΔT 8 K) and the brine circuit (ΔT 3 K) as for the nominal heat output test under standard nominal conditions. Operation of the pump outside the application limits results in the heat pump being switched off by the internal control and safety devices.
- Application limits for the heat pump: Heating (Groundwater heat source):
  - W15/W65
  - W25/W59
  - W25/W25
  - W10/W25
  - W10/W65

M Measuring currents = I_n

I_n VWF xxx/4 230 V				1~/N/PE 230 V	1~/N/PE 230 V	3~/PE 230 V			2~/PE 230 V	
				X101		X101				
				5	1	5	6	7	1	3
				L1	L1	L1	L2	L3	L1	L2
VWF 5X/4 230 V			0,0 kW	0,0	11,9	0,0	0,0	0,0	11,9	11,9
			2,0 kW	8,7	11,9	8,7	8,7	0,0	11,9	11,9
			3,5 kW	15,2	11,9	15,2	0,0	15,2	11,9	11,9
			5,5 kW	23,9	11,9	20,9	8,7	15,2	11,9	11,9
			7,0 kW	--	--	15,2	15,2	26,3	11,9	11,9
			9,0 kW	--	--	20,9	20,9	26,3	11,9	11,9
		X12 (max. 1,3), X14 (max. 0,9), X141, X143, X144, X145, (max. 2,5 A)	0,0 kW	0,0	16,6	0,0	0,0	0,0	16,6	16,6
			2,0 kW	8,7	16,6	8,7	8,7	0,0	16,6	16,6
			3,5 kW	15,2	16,6	15,2	0,0	15,2	16,6	16,6
			5,5 kW	23,9	16,6	20,9	8,7	15,2	16,6	16,6
			7,0 kW	--	--	15,2	15,2	26,3	16,6	16,6
			9,0 kW	--	--	20,9	20,9	26,3	16,6	16,6
VWF 8X/4 230 V			0,0 kW	0,0	19,1	0,0	0,0	0,0	19,1	19,1
			2,0 kW	8,7	19,1	8,7	8,7	0,0	19,1	19,1
			3,5 kW	15,2	19,1	15,2	0,0	15,2	19,1	19,1
			5,5 kW	23,9	19,1	20,9	8,7	15,2	19,1	19,1
			7,0 kW	--	--	15,2	15,2	26,3	19,1	19,1
			9,0 kW	--	--	20,9	20,9	26,3	19,1	19,1
		X12 (max. 1,3), X14 (max. 0,9), X141, X143, X144, X145, (max. 2,5 A)	0,0 kW	0,0	23,8	0,0	0,0	0,0	23,8	23,8
			2,0 kW	8,7	23,8	8,7	8,7	0,0	23,8	23,8
			3,5 kW	15,2	23,8	15,2	0,0	15,2	23,8	23,8
			5,5 kW	23,9	23,8	20,9	8,7	15,2	23,8	23,8
			7,0 kW	--	--	15,2	15,2	26,3	23,8	23,8
			9,0 kW	--	--	20,9	20,9	26,3	23,8	23,8
VWF 11X/4 230 V			0,0 kW	0,0	24,9	0,0	0,0	0,0	24,9	24,9
			2,0 kW	8,7	24,9	8,7	8,7	0,0	24,9	24,9
			3,5 kW	15,2	24,9	15,2	0,0	15,2	24,9	24,9
			5,5 kW	23,9	24,9	20,9	8,7	15,2	24,9	24,9
			7,0 kW	--	--	15,2	15,2	26,3	24,9	24,9
			9,0 kW	--	--	20,9	20,9	26,3	24,9	24,9
		X12 (max. 1,3), X14 (max. 0,9), X141, X143, X144, X145, (max. 2,5 A)	0,0 kW	0,0	29,6	0,0	0,0	0,0	29,6	29,6
			2,0 kW	8,7	29,6	8,7	8,7	0,0	29,6	29,6
			3,5 kW	15,2	29,6	15,2	0,0	15,2	29,6	29,6
			5,5 kW	23,9	29,6	20,9	8,7	15,2	29,6	29,6
			7,0 kW	--	--	15,2	15,2	26,3	29,6	29,6
			9,0 kW	--	--	20,9	20,9	26,3	29,6	29,6

spares & parts online
IBASIS.CO.UK®

spares & parts online
IBASIS.CO.UK®

0020213395_00 ▮ 11.02.2016

Vaillant Ltd.
Nottingham Road ▮ Belper ▮ Derbyshire ▮ DE56 1JT
Telephone 0330 100 3461
info@vaillant.co.uk ▮ www.vaillant.co.uk

© These instructions, or parts thereof, are protected by copyright and may be reproduced or distributed only with the manufacturer's written consent.
We reserve the right to make technical changes.