Installation and maintenance instructions

ecoFIT sustain

615 - 630

GB, IE

Publisher/manufacturer
Vaillant GmbH
Berghauser Str. 40 ▮ D-42859 Remscheid
Tel. +49 21 91 18-0 ▮ Fax +49 21 91 18-2810
info@vaillant.de ▮ www.vaillant.de

Contents

1 Safety ... 3
1.1 Action-related warnings ... 3
1.2 Intended use ... 3
1.3 General safety information ... 3
1.4 Regulations (directives, laws, standards) ... 5
2 Notes on the documentation ... 6
2.1 Observing other applicable documents ... 6
2.2 Storing documents ... 6
2.3 Validity of the instructions ... 6
2.4 Benchmark ... 6
3 Product description ... 6
3.1 Compartment Ventilation ... 6
3.2 Information on the data plate ... 6
3.3 Functional elements: Pure boiler ... 7
3.4 CE label ... 7
4 Set-up ... 7
4.1 Transporting the unit ... 7
4.2 Unpacking the product ... 7
4.3 Checking the scope of delivery ... 7
4.4 Dimensions ... 8
4.5 Minimum clearances ... 8
4.6 Clearance from combustible components ... 8
4.7 Using the mounting template ... 8
4.8 Wall-mounting the product ... 8
4.9 Removing/installing the front casing ... 9
4.10 Removing/installing the side section ... 9
5 Installation ... 10
5.1 Checking the gas meter ... 10
5.2 Gas and water connections ... 10
5.3 Connecting the drain pipework for the expansion relief valve ... 11
5.4 Connecting the condensate discharge pipe ... 11
5.5 Electrical installation ... 12
6 Operation ... 14
6.1 Operating concept ... 14
6.2 Installer level overview ... 14
6.3 Calling up the installer level ... 14
6.4 Live Monitor (status codes) ... 14
6.5 Using check programmes ... 14
7 Start-up ... 15
7.1 Carrying out the initial start-up ... 15
7.2 Checking the type of gas ... 15
7.3 Checking the factory setting ... 15
7.4 Checking and treating the heating water/filling and supplementary water ... 15
7.5 Avoiding danger arising from insufficient water pressure ... 16
7.6 Switching on the product ... 16
7.7 Filling and purging the heating installation ... 16
7.8 Filling the condensate trap ... 17
7.9 Filling the hot water circuit ... 17
7.10 Checking the gas flow rate ... 17
7.11 Checking and adjusting the gas settings ... 17
7.12 Checking leak-tightness ... 19
8 Adapting the unit to the heating installation ... 19
8.1 Burner anti-cycling time ... 19
8.2 Setting the pump output ... 20
8.3 Setting the bypass valve ... 21
8.4 Setting the hot water temperature ... 21
9 Handing the product over to the end user ... 21
10 Troubleshooting ... 21
10.1 Eliminating faults ... 21
10.2 Procuring spare parts ... 21
10.3 Calling up and clearing the fault memory ... 22
10.4 Resetting parameters to factory settings ... 22
10.5 Preparing the repair work ... 22
10.6 Replacing defective components ... 22
10.7 Checking the product for leak-tightness ... 24
11 Inspection and maintenance ... 24
11.1 Using original seals ... 24
11.2 Observing inspection and maintenance intervals ... 24
11.3 Checking the CO_2 content ... 24
11.4 Setting the CO_2 content ... 25
11.5 Removing the gas-air mixture unit ... 25
11.6 Cleaning the heat exchanger ... 26
11.7 Checking the burner ... 26
11.8 Checking the ignition electrode ... 26
11.9 Cleaning the condensate trap ... 26
11.10 Installing the gas-air mixture unit ... 27
11.11 Draining the product ... 27
11.12 Checking the admission pressure of the expansion vessel ... 27
11.13 Completing inspection and maintenance work ... 27
12 Decommissioning the product ... 27
13 Customer service ... 27
Appendix ... 28
A Overview of diagnostics codes ... 28
B Status codes – Overview ... 31
C Overview of fault codes ... 32
D Wiring diagram: Pure boiler ... 35
E Wiring diagram: Pure boiler (30 kW) ... 36
F Inspection and maintenance work ... 37
G Position of the opening in the air/flue pipe ... 38
G.1 Positioning of the opening of a fan-supported flue gas pipe ... 38
G.2 Horizontal terminal positioning ... 39
H Commissioning Checklist ... 40
I Technical data ... 44
Index ... 46

1 Safety

1.1 Action-related warnings

Classification of action-related warnings

The action-related warnings are classified in accordance with the severity of the possible danger using the following warning signs and signal words:

Warning symbols and signal words

Danger!
Imminent danger to life or risk of severe personal injury

Danger!
Risk of death from electric shock

Warning.
Risk of minor personal injury

Caution.
Risk of material or environmental damage

1.2 Intended use

There is a risk of injury or death to the user or others, or of damage to the product and other property in the event of improper use or use for which it is not intended.

The product is intended as a heat generator for closed heating installations and for hot water generation.

Depending on the unit type, the products referred to in these instructions must only be installed and operated in conjunction with the air/flue pipe accessories listed in the other applicable documents.

The use of the product in vehicles, such as mobile homes and caravans, is not classed as intended use. Units that are not classed as vehicles are those that are installed in a fixed and permanent location (known as "fixed installation").

Intended use includes the following:

- observance of accompanying operating, installation and servicing instructions for the product and any other system components
- installing and fitting the product in accordance with the product and system approval
- compliance with all inspection and maintenance conditions listed in the instructions.

Intended use also covers installation in accordance with the IP code.

Any other use that is not specified in these instructions, or use beyond that specified in this document shall be considered improper use. Any direct use in industrial or commercial processes is also deemed to be improper.

Caution.

Improper use of any kind is prohibited.

1.3 General safety information

1.3.1 Risk caused by inadequate qualifications

The following work must only be carried out by competent persons who are sufficiently qualified to do so:

- Set-up
- Dismantling
- Installation
- Start-up
- Inspection and maintenance
- Repair
- Decommissioning

▸ Proceed in accordance with current technology.

1.3.2 Risk of death from escaping gas

What to do if you smell gas in the building:

▸ Avoid rooms that smell of gas.
▸ If possible, open doors and windows fully and ensure adequate ventilation.
▸ Do not use naked flames (e.g. lighters, matches).
▸ Do not smoke.
▸ Do not use any electrical switches, mains plugs, doorbells, telephones or other communication systems in the building.
▸ If it is safe to do so, close the emergency control valve or the main isolator.
▸ If possible, close the gas isolator cock on the product.
▸ Warn other occupants in the building by yelling or banging on doors or walls.

- Leave the building immediately and ensure that others do not enter the building.
- Notify the gas supply company or the Emergency Service Provider
  +44 (0) 800 111999 by telephone once you are outside of the building.

1.3.3 Risk of death from escaping flue gas

If you operate the product with an empty condensate trap / siphon, then flue gas may escape into the room air.

- In order to operate the product, ensure that the condensate trap / siphon is always full.

1.3.4 Risk of death due to blocked or leaking flue gas routes

Installation errors, damage, tampering, unauthorised installation sites or similar can cause flue gas to escape and result in a risk of poisoning.

What to do if you smell flue gas in the property:

- Open all accessible doors and windows fully to provide ventilation.
- Switch off the product.
- Check the flue gas routes in the product and the flue gas diversions.

1.3.5 Risk of death due to explosive and flammable materials

- Do not use the product in storage rooms that contain explosive or flammable substances (such as petrol, paper or paint).

1.3.6 Risk of death from electric shock

There is a risk of death from electric shock if you touch live components.

Before commencing work on the product:

- Unplug the mains plug.
- Or disconnect the product from the power supply by switching off all power supplies (electrical partition with a contact gap of at least 3 mm, e.g. fuse or circuit breaker).
- Secure against being switched back on again.
- Wait for at least 3 minutes until the capacitors have discharged.
- Check that there is no voltage.

1.3.7 Risk of death due to lack of safety devices

The schematic drawings included in this document do not show all safety devices required for correct installation.

- Install the necessary safety devices in the system.
- Observe the applicable national and international laws, standards and guidelines.

1.3.8 Risk of poisoning and burns caused by escaping hot flue gases

- Only operate the product if the air/flue pipe has been completely installed.
- With the exception of short periods for testing purposes, only operate the product when the front casing is installed and closed.

1.3.9 Risk of being burned or scalded by hot components

- Only carry out work on these components once they have cooled down.

1.3.10 Risk of injury due to the heavy weight of the product

- Make sure that the product is transported by at least two people.

1.3.11 Risk of corrosion damage due to unsuitable combustion and room air

Sprays, solvents, chlorinated cleaning agents, paint, adhesives, ammonia compounds, dust or similar substances may lead to corrosion on the product and in the flue system.

- Ensure that the supply of combustion air is always free of fluorine, chlorine, sulphur, dust, etc.
- Ensure that no chemical substances are stored at the installation site.
- If you are installing the product in hairdressing salons, painter's or joiner's workshops, cleaning businesses or similar locations, choose a separate installation room in which the room air is technically free of chemical substances.

1.3.12 Risk of material damage caused by frost

- Do not install the product in rooms prone to frost.

1.3.13 Risk of material damage caused by using an unsuitable tool

- Use the correct tool.

1.4 Regulations (directives, laws, standards)

- Observe the national regulations, standards, directives, ordinances and laws.

2 Notes on the documentation

2.1 Observing other applicable documents

► You must observe all the operating and installation instructions included with the system components.

2.2 Storing documents

► Pass these instructions and all other applicable documents on to the system operator.

2.3 Validity of the instructions

These instructions apply only to:

Product article number

	Article number	Gas Council Number
VU 156/6-3 (H-GB) ecoFIT sustain 615	0010025271	41-694-30
VU 186/6-3 (H-GB) ecoFIT sustain 618	0010025272	41-694-31
VU 306/6-3 (H-GB) ecoFIT sustain 630	0010025273	41-694-32

2.4 Benchmark

Vaillant is a licensed member of the Benchmark Scheme.

Benchmark places responsibilities on both manufacturers and installers. The purpose is to ensure that customers are provided with the correct equipment for their needs, that it is installed, commissioned and serviced in accordance with the manufacturer's instructions by a competent person approved at the time by the Health and Safety Executive and that it meets the requirements of the appropriate Building Regulations. The Benchmark Checklist can be used to demonstrate compliance with Building Regulations and should be provided to the customer for future reference.

Installers are required to carry out installation, commissioning and servicing work in accordance with the Benchmark Code of Practice which is available from the Heating and Hotwater Industry Council who manage and promote the Scheme.

Benchmark is managed and promoted by the Heating and Hotwater Industry Council.

benchmark
COLLECTIVE MARK
THE MARK OF QUALITY FOR THE INSTALLATION, COMMISSIONING AND SERVICING OF DOMESTIC HEATING AND HOT WATER SYSTEMS

For more information visit www.centralheating.co.uk

3 Product description

3.1 Compartment Ventilation

The boilers are very high efficiency appliances.

As a consequence the heat loss from the appliance casing during operation is very low.

Compartment ventilation is not required as the products are only certified, and can only be fitted with a concentric flue system.

3.2 Information on the data plate

The data plate is mounted on the underside of the product at the factory.

The data plate keeps record of the country in which the product is to be installed.

Information on the data plate	Meaning
	Barcode with serial number
Serial number	For quality control purposes; 3rd and 4th digits = year of production For quality control purposes; 5th and 6th digits = week of production For identification purposes; 7th to 16th digits = product article number For quality control purposes; 17th to 20th digits = place of manufacture
ecoFIT sustain	Product designation
2H, G20 – 2 kPa (20 mbar)	Factory setting for gas type and gas connection pressure
Cat.	Unit category
Condensing technology	Efficiency class of the boiler in accordance with EC Directive 92/42/EEC
Type: Xx3(x)	Permissible flue gas connections
PMS	Maximum water pressure in heating mode
PMW	Maximum water pressure in domestic hot water mode
V/Hz	Electric connection
W	Max. electrical power consumption
IP	IP rating
	Heating mode
	Domestic hot water generation
*P*n	Nominal heat output range in heating mode
*P*nc	Nominal heat output range in heating mode (condensing technology)
P	Nominal heat output range in domestic hot water mode
*Q*n	Nominal heat input range in heating mode
*Q*nw	Nominal heat input range in domestic hot water mode
$T_{max.}$	Max. flow temperature
NOx	NOx class for the product
Code (DSN)	Specific product code

Information on the data plate	Meaning
	Read the instructions.
GC no.	Gas council number

3.3 Functional elements: Pure boiler

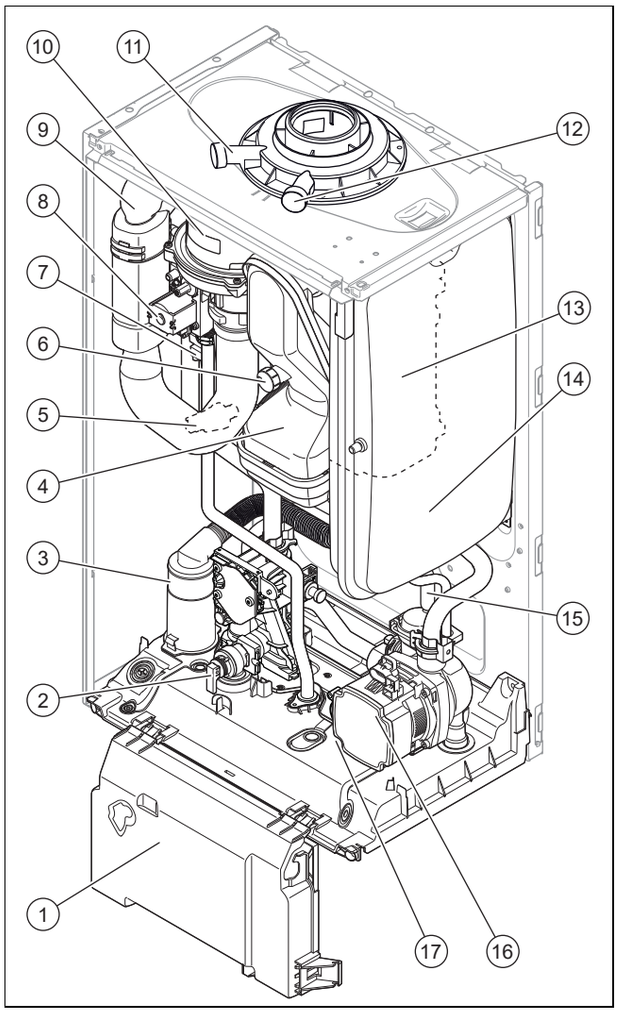

1	Electronics box	10	Fan/gas-air mixture
2	Heating circuit expansion relief valve	11	Supply air test point (for the upper air/flue connection)
3	Condensate siphon	12	Flue gas analysis point (for the upper air/flue connection)
4	Flue pipe	13	Primary heat exchanger
5	Pressure sensor	14	Heating expansion vessel
6	Flue gas analysis point (for the rear air/flue connection)	15	Purging hose
7	Ignition transformer	16	Heating pump
8	Gas valve assembly	17	Bypass
9	Air intake pipe		

3.4 CE label

The CE label shows that the products comply with the basic requirements of the applicable directives as stated on the identification plate.

The declaration of conformity can be viewed at the manufacturer's site.

4 Set-up

4.1 Transporting the unit

Important: With regard to the regulations of 1992 concerning the manual handling of loads, the unit exceeds the weight that can be lifted by a single person.

4.1.1 General

- ► Hold the load as close as possible to your body. Avoid rotational movements. Instead, reposition your feet.
- ► If the unit is being lifted by two persons, ensure your movements are coordinated during lifting.
- ► Avoid bending your upper body – do not lean forwards or to the side.
- ► Wear suitable non-slip protective gloves in order to protect your hands against sharp edges. Ensure that you are carrying the load securely.
- ► If required, get somebody to assist you in this.

4.1.2 Unloading the box from the delivery van

- ► It is recommended that two people lift the unit together.
- ► Lift the box using the straps provided.
- ► Use safe lifting techniques – keep your back straight and bend your legs at the knee.
- ► Hold the load as close as possible to your body.
- ► If the unit is being lifted by two persons, ensure your movements are coordinated during lifting.
- ► If required, get somebody to assist you in this.

4.2 Unpacking the product

1. Remove the product from its box.
2. Remove the protective film from all of the product's components.

4.3 Checking the scope of delivery

- ► Check that the scope of delivery is complete and intact.

Quantity	Description
1	Heat generator
1	Hanging bracket
1	Flexible condensate drain pipework
4	3/4" seals
3	1/2" seals
2	Service valve
1	Gas isolator cock
2	Connection pipe (heating flow and return)

Quantity	Description
1	Gas pipe
1	Expansion relief valve discharge pipe
1	Installation template
1	Enclosed documentation

4.4 Dimensions

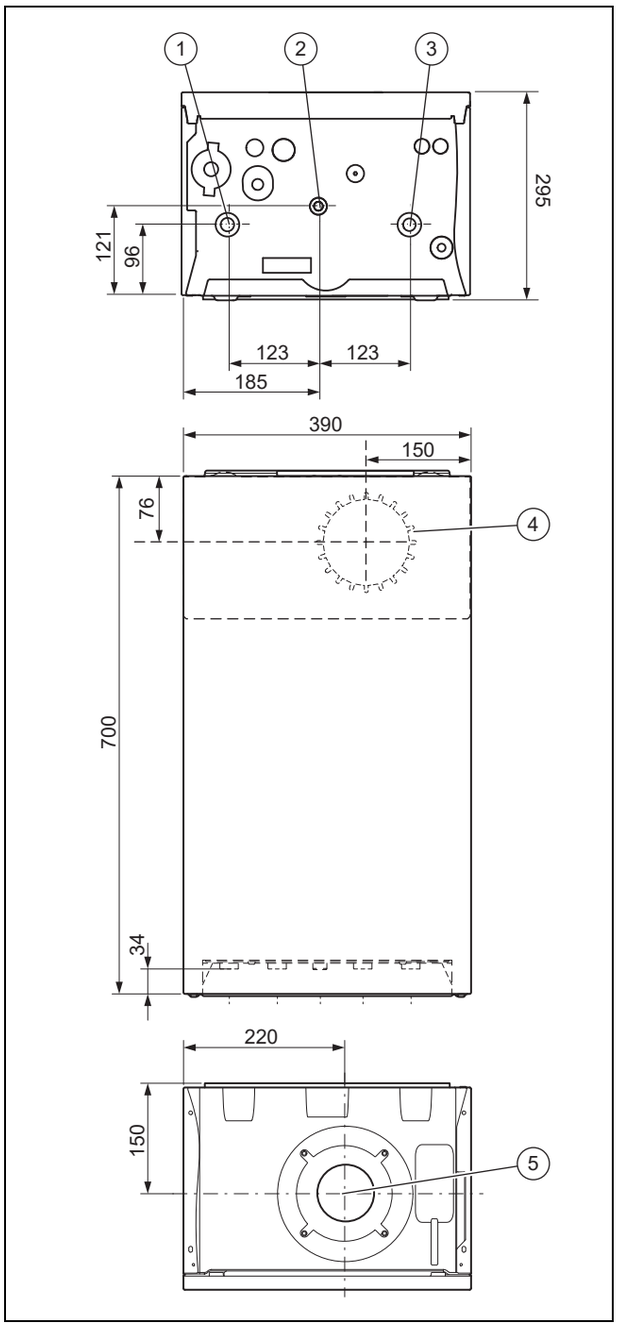

1 Heating flow
2 Gas connection
3 Heating return
4 Connection on the back of the air/flue pipe
5 Connection on the top of the air/flue pipe

4.5 Minimum clearances

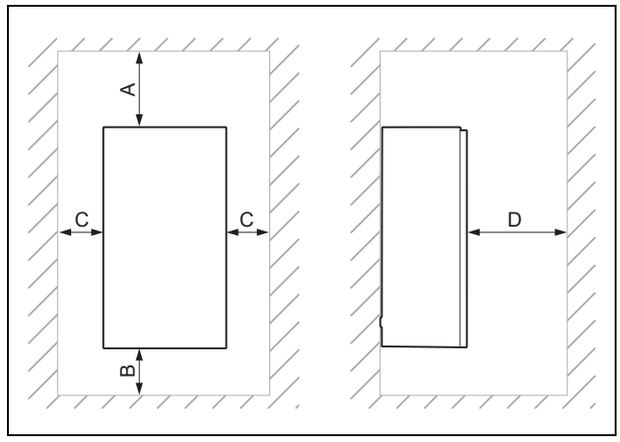

	Minimum clearance
A	150 mm (top air/flue gas connection) 20 mm (rear air/flue connection)
B	150 mm
C	5 mm (70 mm, if the side sections have to be removed)
D	600 mm

4.6 Clearance from combustible components

It is not necessary to maintain a clearance between the product and components made of combustible materials that go beyond the minimum clearances .

4.7 Using the mounting template

► Use the mounting template to ascertain the locations at which you need to drill holes.

4.8 Wall-mounting the product

Note
If you are using the rear air/flue connection, install the air/flue pipe before you wall-mount the product.

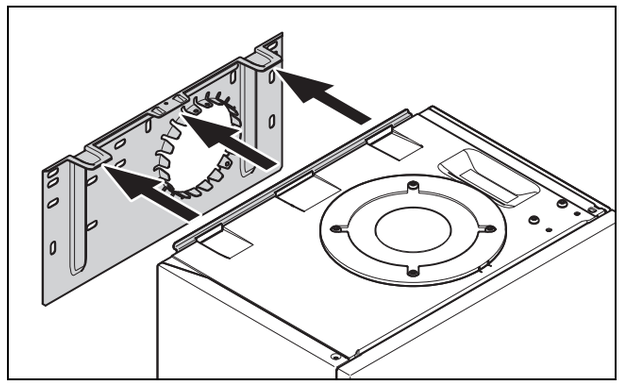

1. Check whether the wall has sufficient load-bearing capacity to bear the operational weight of the product.
2. Check if the supplied fixing material may be used for the wall.

Conditions: The load-bearing capacity of the wall is sufficient, The fixing material may be used for the wall

► Wall-mount the product as described.

Conditions: The load-bearing capacity of the wall is not sufficient

► Ensure that wall-mounting apparatus on-site has a sufficient load-bearing capacity. Use individual stands or primary walling, for example.
► Do not wall-mount the product if you cannot provide wall-mounting apparatus with a sufficient load-bearing capacity.

Conditions: The fixing material may not be used for the wall

► Wall-mount the product as described using the permitted fixing material provided on-site.

4.9 Removing/installing the front casing

4.9.1 Removing the front casing

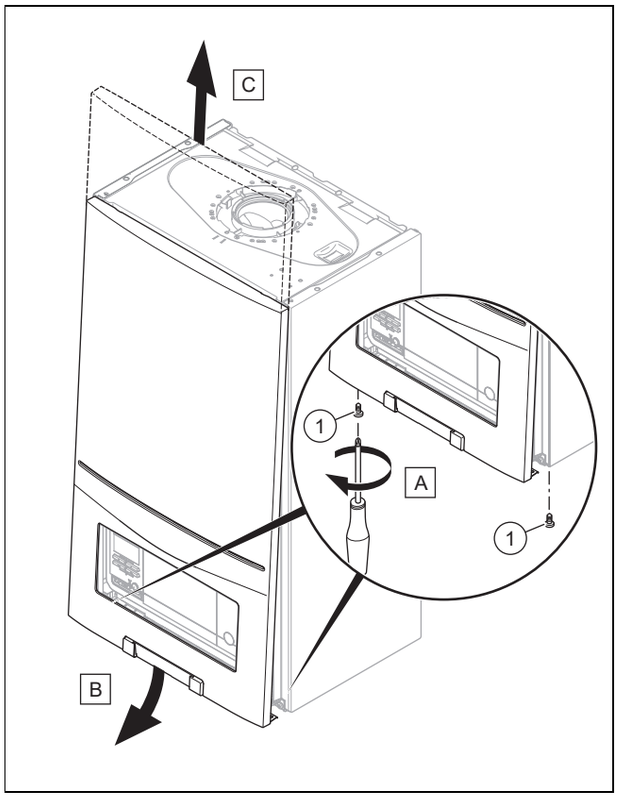

1. Undo the two screws **(1)**.
2. Gently press the front casing backwards in the centre so that the latching lug is released.
3. Pull the front casing forwards at the bottom edge.
4. Lift the front casing upwards from the bracket.

4.9.2 Installing the front casing

► Refit the components in the reverse order.

4.10 Removing/installing the side section

4.10.1 Removing the side section

Caution.
Risk of material damage caused by mechanical deformation.

Removing **both** side sections may cause mechanical distortion in the product, which may cause damage to the piping, for example, and potentially result in leaks.

► Always remove **only one** side section – never both side sections at the same time.

Note
If there is sufficient lateral clearance (at least 70 mm), you can remove the side section to facilitate maintenance or repair work.

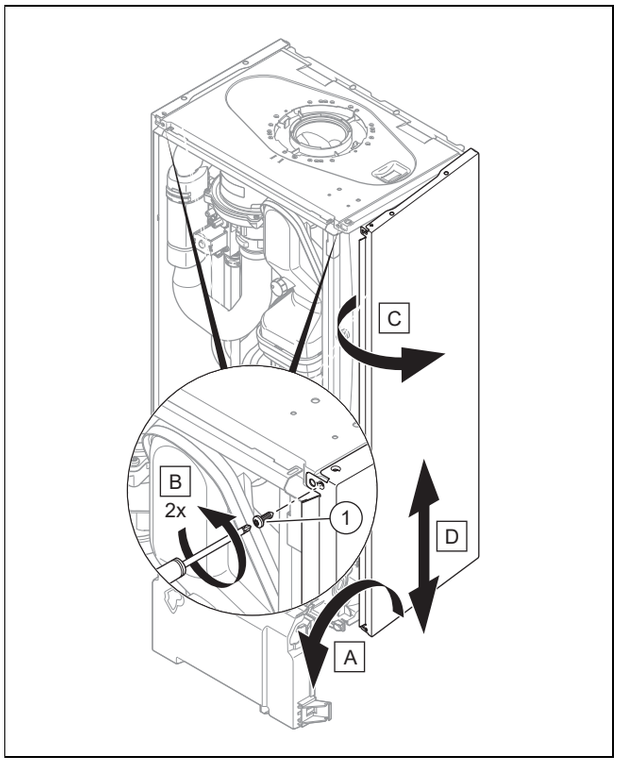

1. Tilt the electronics box forward.
2. Hold on to the side section so that it cannot fall and unscrew both screws **(1)**, one from the top and one from the bottom.
3. Tilt the side section to the outside and move it downwards and out.

4.10.2 Installing the side section

► Refit the components in the reverse order.

5 Installation

Danger!

Risk of scalding and/or damage due to incorrect installation leading to escaping water.

Mechanical stresses in the connection pipes may lead to leaks.

► Ensure that there is no mechanical stress when installing the connection pipes.

Caution.

Risk of material damage caused by residues in the pipelines.

Welding remnants, sealing residues, dirt or other residues in the pipelines may damage the product.

► Flush the heating installation thoroughly before installing the product.

5.1 Checking the gas meter

► Make sure that the existing gas meter is capable of passing the rate of gas supply required.

5.2 Gas and water connections

Caution.

Risk of damage caused by incorrect gas connection installation.

Excess test pressure or operating pressure may cause damage to the gas valve.

► Check the leak-tightness of the gas valve using a maximum pressure of 11 kPa (110 mbar).

Caution.

Risk of material damage caused by corrosion

Due to non-diffusion-tight plastic pipes in the heating installation, air gets into the heating water. Air in the heating water causes corrosion in the heat generator circuit and in the product.

► If you use non-diffusion-tight plastic pipes in the heating installation, ensure that no air gets into the heat generator circuit.

Caution.

Risk of material damage due to heat transfer during soldering.

► Only solder connectors if the connectors are not yet screwed to the service valves.

Note

Apply heat insulation to the water pipes to the boiler outlet and to the installation.

Preliminary work

1. Check that the system volume and the volumetric capacity of the expansion vessel are compatible.
   ▽ If the volume of the expansion vessel is insufficient for the installation.
   ► Install an additional expansion vessel in the heating return, as close to the product as possible.
   ► Install a non-return valve at the product's outlet (heating flow).
2. Ensure that the installation has the following components:

Working materials
A cold water stopcock for the unit
A gas stopcock for the unit
A filling and draining device in the heating installation

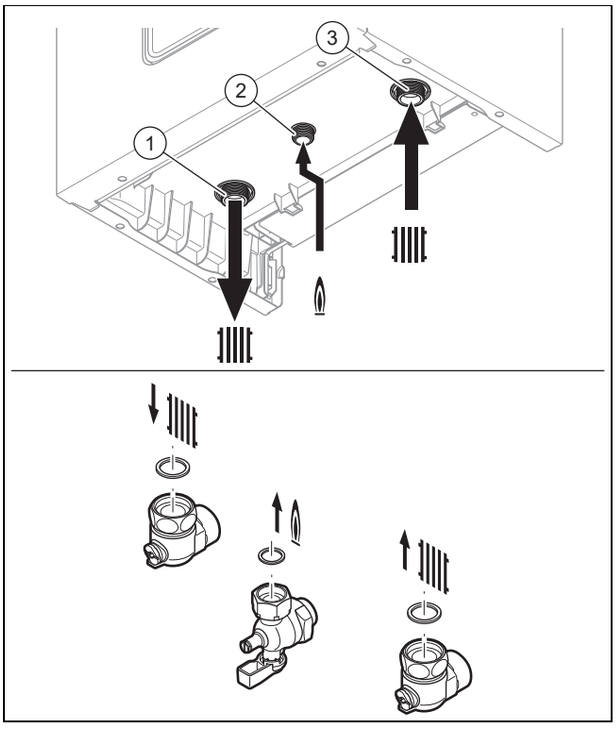

1	Heating flow connection, G3/4	3	Heating return connection, G3/4
2	Gas connection, G1/2		

1. Connect the water and gas connections in accordance with the applicable standards.
2. Purge the gas pipe before start-up.
3. Check whether the connections (→ Page 19) are leak-tight.

5.3 Connecting the drain pipework for the expansion relief valve

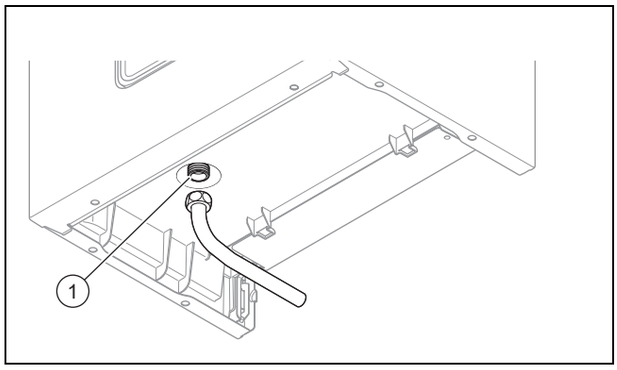

- Ensure that the pipeline is visible.
- The pipe must have a continuous fall and be routed to a position so that any discharge of water, possibly boiling, or steam cannot create any danger to persons, damage to property or external electrical components and wiring.
  - ◁ The piping must be installed in such a way that you can see when water drips out.

5.4 Connecting the condensate discharge pipe

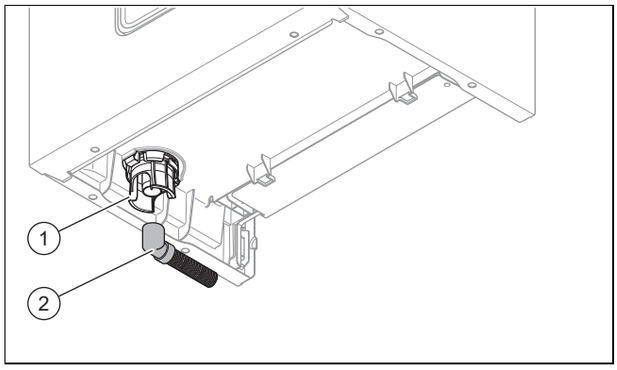

- Follow the instructions listed here and observe the legal and local regulations on condensate discharge.
- Use PVC or any other material that is suitable for draining the non-neutralised condensate.
- If you cannot guarantee that the materials from which the drain pipework is made are suitable, install a system for neutralising the condensate.

Note
The condensate drain pipework must have a continuous fall (45 mm per metre) and should whenever possible terminate at a suitable drain point within the heated envelope of the building that will remain frost free under long periods of low external temperatures.

- Connect the condensate traps **(1)**. Use the supplied drain hose **(2)** for this.
- Connect a condensate discharge pipe (21.5 mm, not included in the scope of delivery) to the drain hose **(2)**.
- During installation remove all burrs from inside of cut pipe work and avoid excessive adhesive which may trap small pockets of water close to the pipe wall which can freeze and build into a larger ice plug.
- For any installation the condensate must be free flowing and not be possible for air back-pressure to prevent water flow.
- As with other pipe work insulate the condensate discharge pipe to minimise any risk of freezing and beware when crossing cavities that the fall is maintained and the pipe sleeved.

You can find further information in specification "BS 6798" for installing and maintaining gas-fired boilers with a nominal heat input below 70 kW.

5.4.1 Condensate drainage systems

5.4.1.1 Internal soil and vent pipe

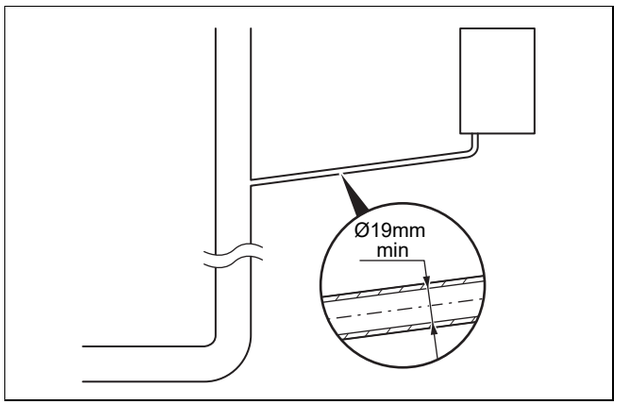

5.4.1.2 External soil and vent pipe

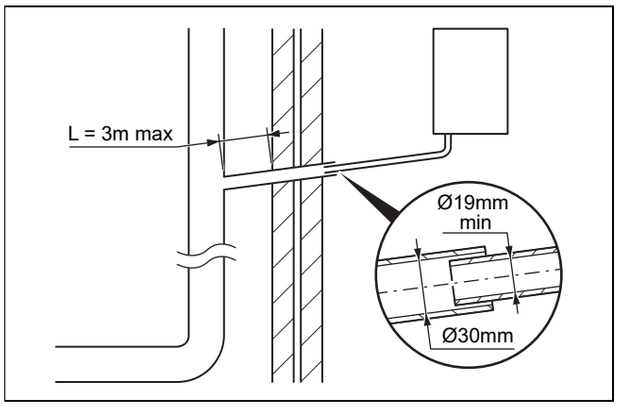

5.4.1.3 External termination into a gulley or hopper

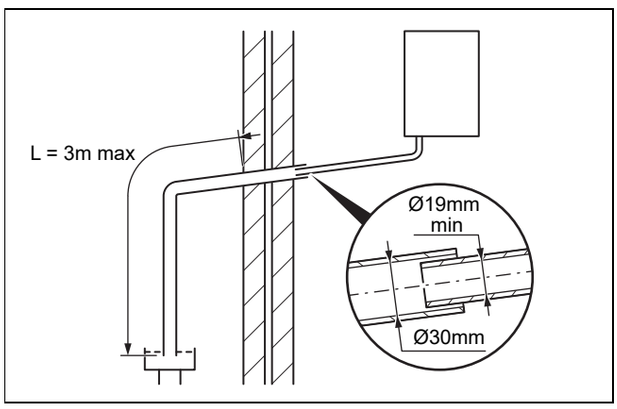

5.4.1.4 Internal termination into combined sink waste

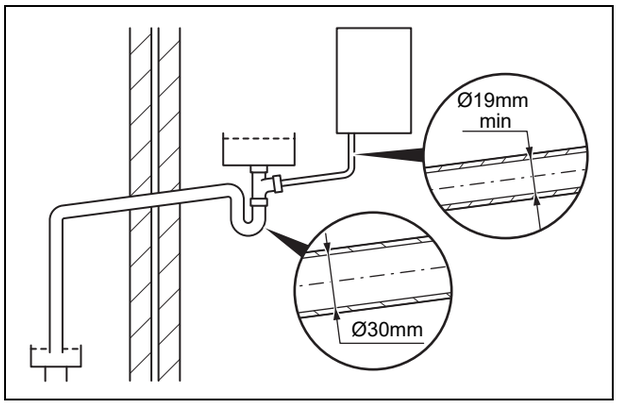

5.4.1.5 Internal termination downstream of sink waste

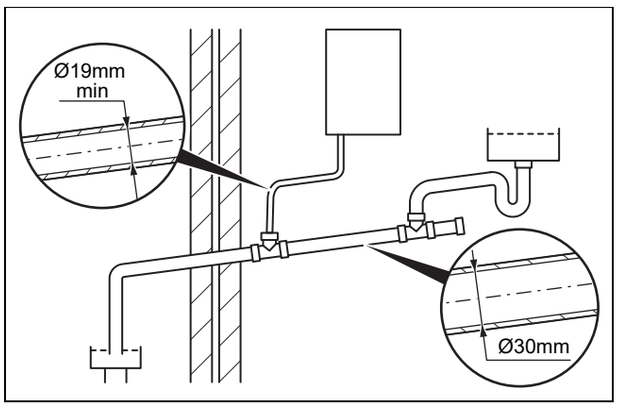

5.4.1.6 External termination into soakaway

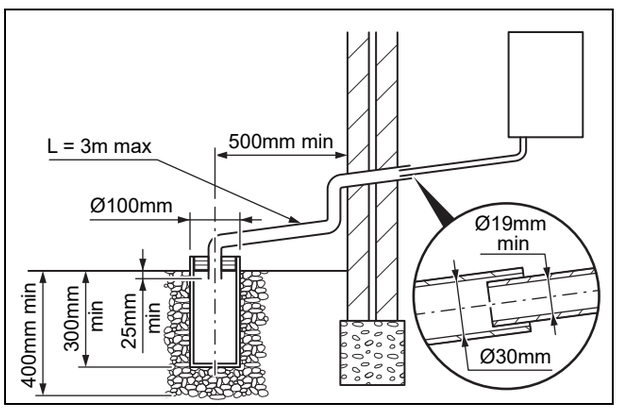

5.4.1.7 External termination into rain water down pipe

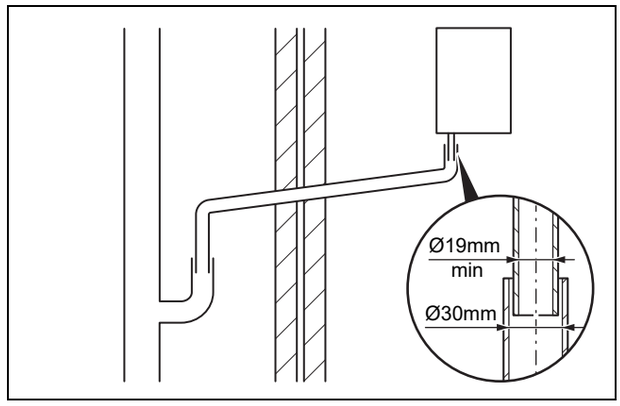

5.5 Electrical installation

Danger!

Risk of death from electric shock!

Continuous voltage is present at power supply terminals L and N even when the unit is switched off using the standby button.

- ► Switch off the power supply.
- ► Secure the power supply against being switched on again.

Only qualified electricians may carry out the electrical installation.

5.5.1 Opening the electronics box

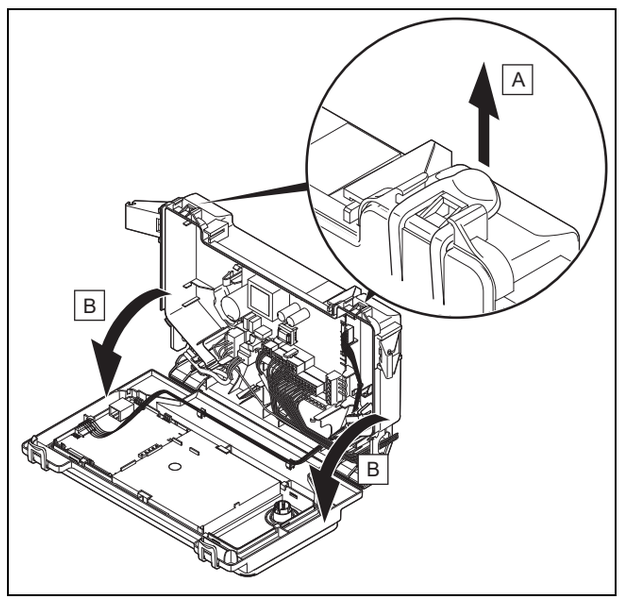

- ► Follow the instructions in the specified sequence.

5.5.2 Closing the electronics box

► Follow the instructions in the reverse order.

5.5.3 Cable route

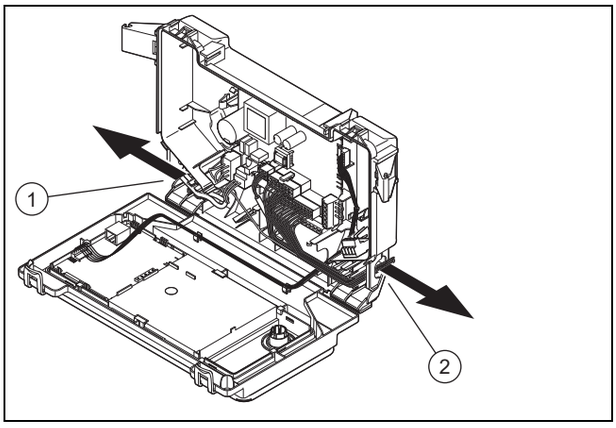

1	230-V cable route	2	24-V cable or eBUS cable route

5.5.4 Carrying out the wiring

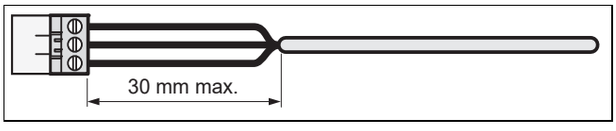

1. Shorten the connection cables to the appropriate lengths to prevent them from causing damage inside the electronics box.
2. Screw the plug to the connection cable.
3. Plug the plug into the slot provided on the PCB.

5.5.5 Establishing the power supply

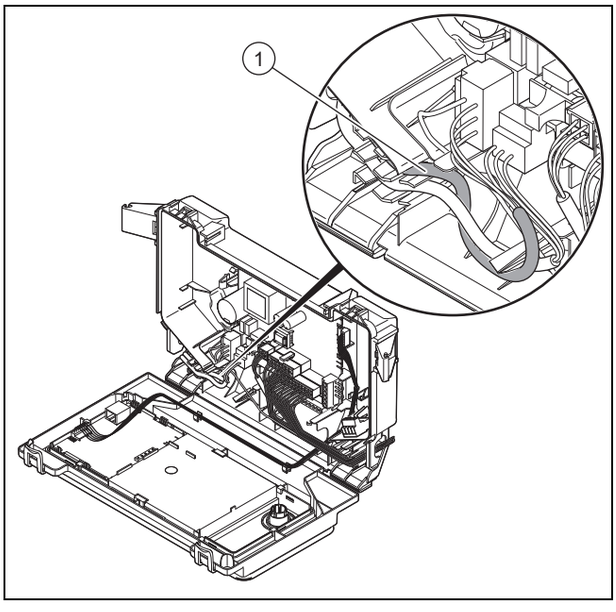

1. Observe all valid regulations.
2. Ensure that the rated mains voltage is 230 V.
3. Set up a fixed connection and install a partition with a contact opening of at least 3 mm (e.g. fuses or power switches).
4. Provide one common electricity supply for the boiler and for the corresponding controller:
   – Power supply: Single-phase, 230 V, 50 Hz
   – Fuse protection: ≤ 3 A
5. Open the electronics box. (→ Page 12)
6. Observe the routing of the power supply cable **(1)** in the electronics box in order to guarantee that there is no strain.

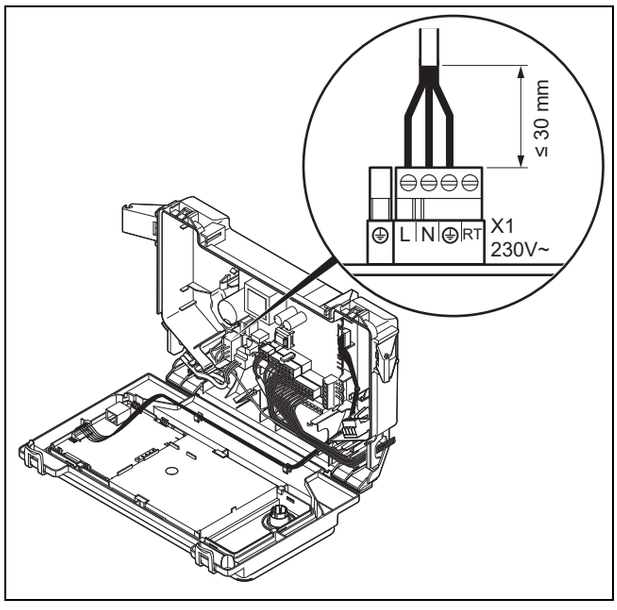

7. Carry out the wiring. (→ Page 13)
8. Close the electronics box.
9. Make sure that access to the mains connection is always available and is not covered or blocked.

5.5.6 Connecting controls to the electronics

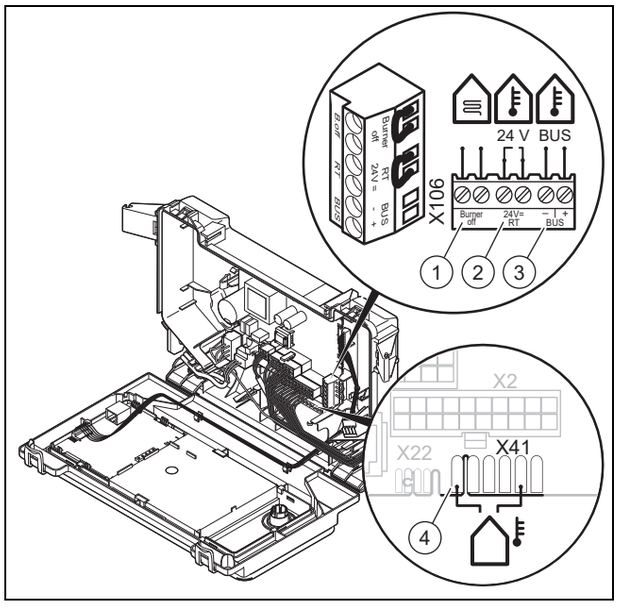

1	Safety thermostat for underfloor heating	3	eBUS control or radio receiver unit
2	24 V control	4	Outdoor temperature sensor, wired

1. Open the electronics box. (→ Page 12)
2. Carry out the wiring. (→ Page 13)

3. Connect the individual components depending on the installation type.

Conditions: If installing a multi-circuit controller.

- Change the pump's operating mode **d.18** from Eco (intermittently operating pump) to Comfort (continuously operating pump).

Conditions: When connecting a control (230 V).

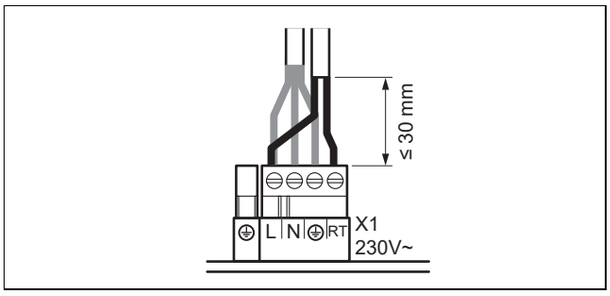

- Connect the control to the main plug.
- Remove the bridge from the plug **24V=RT**.

4. Close the electronics box.

6 Operation

6.1 Operating concept

The operating concept and the display and setting facilities of the operator level are described in the operating instructions.

An overview of the display and setting options in the installer level can be found in the section "Overview of the installer level". (→ Page 14)

6.2 Installer level overview

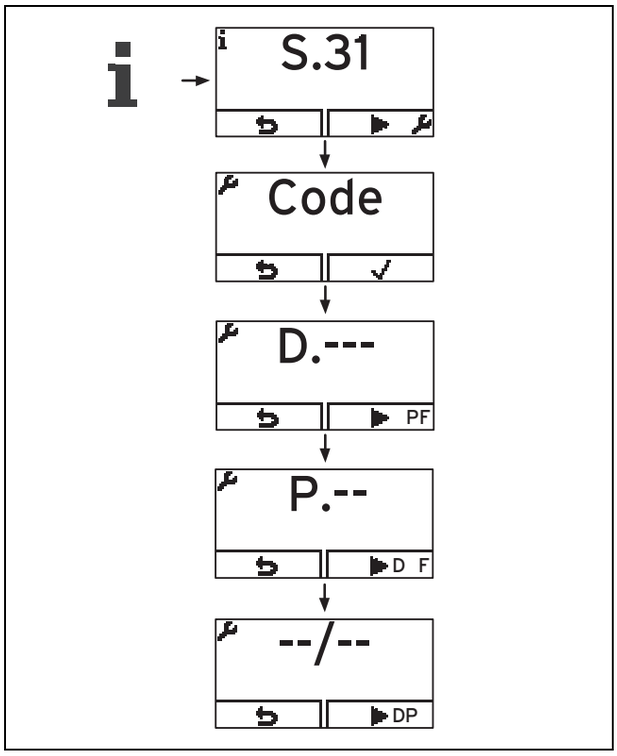

6.3 Calling up the installer level

1. Only call up the installer level if you are a competent person.
2. Press ⊟ and ⊟ ("i") at the same time.
   ◁ **S.xx** appears in the display (current unit status).
3. Press ⊟ to access the installer level.
   ◁ **Code** and **--** appear in the display.
4. Set the value **17** (code) and confirm by pressing ⊟.
5. Press ⊟ to access the check programmes **(P)** and the fault codes **(F)** and to return to the diagnostics codes **(D)**.
6. Use ⊞ or ⊟ to set the required value and confirm by pressing ⊟.
7. Confirm by pressing (✓).
8. Press ⊟ to cancel a setting or exit the installer level.

6.4 Live Monitor (status codes)

Menu → Live monitor

Status codes in the display provide information on the product's current operating status.

Status codes – Overview (→ Page 31)

6.5 Using check programmes

Call up the installer level + 1 x ⊟

Display	Meaning
P.00	Purging check programme: The internal pump is cyclically actuated. The heating circuit and the hot water circuit are purged via the automatic air vent (the cap of the automatic air vent must be released). 1 x ⊟: Start heating circuit purging 2 x ⊟ (→): Start domestic hot water circuit purging 3 x ⊟ (→): Restart heating circuit purging 1 x ⊟ (**Cancel**): End purge programme **Note** The purge programme runs for 7.5 min per circuit and then terminates. Purging the heating circuit: Prioritising diverter valve in heating position, actuation of internal pump for 9 cycles: 30 sec. on, 20 sec. off. Display: **Active heating circuit**. Purging the hot water circuit: After the above-mentioned cycles have run or the right-hand selection button has been pressed again: Prioritising diverter valve in the domestic hot water position, actuation of the internal pump as above. Display: **Active hot water circuit**.
P.01	Maximum load check programme: After successful ignition, the product is operated at maximum heat input.
P.02	Minimum load check programme: After successful ignition, the product is operated at minimum heat input.
P.06	Filling mode check programme: The prioritising diverter valve is moved to the mid-position. The burner and pump are switched off (to fill or drain the product).

7 Start-up

7.1 Carrying out the initial start-up

Initial start-up must be carried out by a customer service technician or an authorised competent person using the first-commissioning-checklist. The first-commissioning-checklist in the appendix (→ Page 40) of the installation instructions must be filled out and stored carefully along with the unit's documentation.

- ► Carry out the initial start-up using the first-commissioning-checklist in the appendix.
- ► Fill out and sign the first-commissioning-checklist.

7.2 Checking the type of gas

Make sure that the product is set up correctly by checking the type of gas. This ensures optimum combustion quality.

- ► Check the type of gas as part of routine product maintenance work when replacing components or carrying out work on the gas route.

7.3 Checking the factory setting

The product's combustion has been factory tested and is preset for operation with the gas group indicated on the identification plate.

The product is only authorised to be operated with natural gas.

- ► Check the information about the type of gas indicated on the identification plate and compare this with the type of gas available at the installation location.

Conditions: The product design **is not compatible** with the local gas group

- ► Do not start up the product.

Conditions: The product design **is compatible** with the local gas group

- ► Proceed as described below.

7.4 Checking and treating the heating water/filling and supplementary water

Caution.

Risk of material damage due to poor-quality heating water

- ► Ensure that the heating water is of sufficient quality.

- ► Before filling or topping up the installation, check the quality of the heating water.

Checking the quality of the heating water

- ► Remove a little water from the heating circuit.
- ► Check the appearance of the heating water.
- ► If you ascertain that it contains sedimentary materials, you must desludge the installation.
- ► Use a magnetic rod to check whether it contains magnetite (iron oxide).
- ► If you ascertain that it contains magnetite, clean the installation and apply suitable corrosion-protection measures, or fit a magnetic filter.
- ► Check the pH value of the removed water at 25 °C.
- ► If the value is below 6.5 or above 8.5, clean the system and treat the heating water.
- ► Ensure that oxygen cannot get into the heating water.

Checking the filling and supplementary water

- ► Before filling the installation, measure the hardness of the filling and supplementary water.

Treating the filling and supplementary water

- ► Observe all applicable national regulations and technical standards when treating the filling and supplementary water.

Provided the national regulations and technical standards do not stipulate more stringent requirements, the following applies:

You must treat the heating water in the following cases:

- If the entire filling and supplementary water quantity during the operating life of the system exceeds three times the nominal volume of the heating installation, or
- If the guideline values listed in the following table are not met, or
- if the pH value of the heating water is less than 6.5 or more than 8.5.

Total heating output	Water hardness at specific system volume[1)]					
	≤ 20 l/kW		> 20 l/kW ≤ 50 l/kW		> 50 l/kW	
kW	ppm $CaCO_3$	mol/m³	ppm $CaCO_3$	mol/m³	ppm $CaCO_3$	mol/m³
< 50	< 300	< 3	200	2	2	0.02
> 50 to ≤ 200	200	2	150	1.5	2	0.02
> 200 to ≤ 600	150	1.5	2	0.02	2	0.02
> 600	2	0.02	2	0.02	2	0.02

1) Nominal capacity in litres/heating output; in the case of multi-boiler systems, the smallest single heating output is to be used.

Caution.

The use of unsuitable heating water may cause aluminium corrosion and a resulting lack of leak-tightness.

In contrast to steel, grey cast iron or copper, for example, aluminium reacts with alkaline heating water (pH value > 8.5) to produce substantial corrosion.

- ► When using aluminium, make sure that the pH value of the heating water is between 6.5 and a maximum of 8.5.

Caution.

Risk of material damage if the heating water is treated with unsuitable additives.

Unsuitable additives may cause changes in the components, noises in heating mode and possibly subsequent damage.

► Do not use any unsuitable frost and corrosion protection agents, biocides or sealants.

No incompatibility with our products has been detected to date with proper use of the following additives.

► When using additives, follow the manufacturer's instructions without exception.

We accept no liability for the compatibility of any additive or its effectiveness in the rest of the heating system.

Additives for cleaning measures (subsequent flushing required)

– Adey MC3+
– Adey MC5
– Fernox F3
– Sentinel X 300
– Sentinel X 400

Additives intended to remain permanently in the installation

– Adey MC1+
– Fernox F1
– Fernox F2
– Sentinel X 100
– Sentinel X 200

Additives for frost protection intended to remain permanently in the installation

– Adey MC ZERO
– Fernox Antifreeze Alphi 11
– Sentinel X 500

► If you have used the above-mentioned additives, inform the end user about the measures that are required.
► Inform the end user about the measures required for frost protection.

7.5 Avoiding danger arising from insufficient water pressure

The filling pressure must be between 0.10 and 0.15 MPa (1.0 and 1.5 bar).

If the heating installation extends over several storeys, higher filling pressures may be required to avoid air entering the heating installation.

If the water pressure falls below 0.05 MPa (0.5 bar), the value flashes in the display.

If the water pressure falls below 0.03 MPa (0.3 bar), the product switches off. The display shows 0.0 MPa (0.0 bar). Fault **F.22** is stored in the fault list.

► Top up the water in the heating installation to start up the product again.
  ◁ The pressure value flashes in the display until a pressure of 0.05 MPa (0.5 bar) or higher has been reached.

7.6 Switching on the product

► Switch on the product via the main switch installed on-site.

7.7 Filling and purging the heating installation

Preliminary work

► Flush the heating installation through.

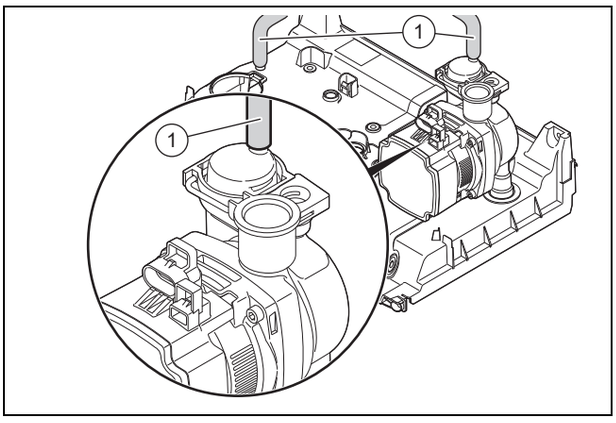

1. Check the silicone hose connection **(1)** between the pump's automatic air vent and the hydraulic console.
2. Fill with water until the required filling pressure is reached.
   – Recommended filling pressure: 1 … 1.5 bar
   ◁ The heating and hot water functions cannot be activated.
   ◁ The pressure value flashes in the display until a pressure of 0.05 MPa (0.5 bar) or higher has been reached.
   ◁ An automatic air vent function is activated if the pressure exceeds 0.05 MPa (0.5 bar) for longer than 15 seconds.
3. Purge each radiator until the water escapes normally, and then retighten the system's purging valves.
4. Check that all connections are leak-tight.

Conditions: If the noise persists in the boiler

► Purge the product again by activating check programme **P.00**.

7.8 Filling the condensate trap

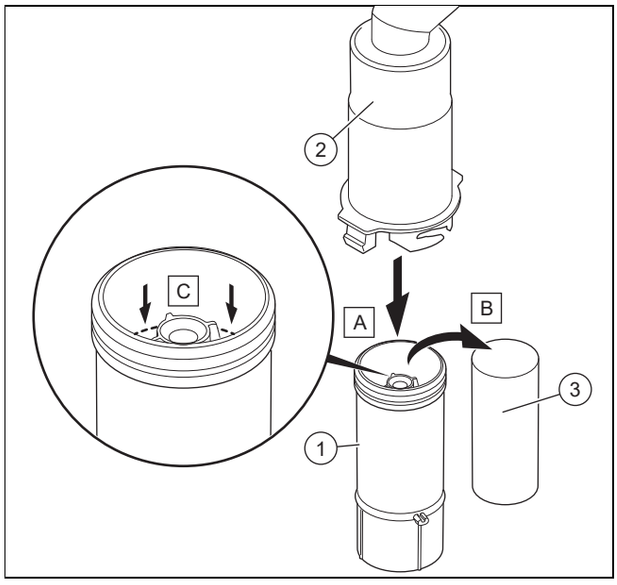

1. Unclip the lower section of the condensate trap **(1)** from the upper section of the condensate trap **(2)**.
2. Remove the float **(3)**.
3. Fill the lower section of the condensate trap with water up to 10 mm below the upper edge of the condensate discharge pipe.
4. Re-insert the float **(3)**.

> **Note**
> Check that the float is present in the condensate trap.

5. Clip the lower section of the condensate trap **(1)** into the upper section of the condensate trap **(2)**.

7.9 Filling the hot water circuit

1. Open the water tap to fill the hot water circuit.
2. Close the water tap once the appropriate volume of water has flowed out.
   ◁ The hot water circuit is filled.
3. Check all connections and the entire system for leak-tightness.

7.10 Checking the gas flow rate

The gas flow rate has been set during production and does not require adjustment. With the front casing fitted check the gas flow rate of the boiler as follows:

- ► Start up the product with the check programme **P.01**.
- ► In addition, ensure that maximum heat can be dissipated into the heating system by turning up the room thermostat.
- ► Wait at least 5 minutes until the boiler has reached its operating temperature.
- ► Ensure that all other gas appliances in the property are turned off.
- ► Measure the gas flow rate at the gas meter.
- ► Compare the measured values with the corresponding values in the table.

Qnw from the data plate	H gas in m³/h		
	Nom.	+5%	−10%
15.3	1.62	1.70	1.46
18.4	1.95	2.05	1.76
24.7	2.61	2.74	2.35
25.7	2.72	2.86	2.45
28.6	3.03	3.18	2.73
30.6	3.24	3.40	2.92
35.7	3.78	3.97	3.40

Conditions: Gas flow rate not in the permissible range

- ► Check all of the piping and ensure that the gas flow rates are correct.
- ► Only put the product into operation once the gas flow rates have been corrected.

Conditions: Gas flow rate in the permissible range

- ► End the check programme **P.01**.
- ► Allow the boiler to cool down by allowing pump overrun to operate for a minimum of 2 minutes.
- ► Record the boiler maximum gas flow rate onto the Benchmark gas boiler commissioning checklist.

7.11 Checking and adjusting the gas settings

Only a qualified competent person is authorised to implement the settings on the gas valve assembly.

Each destroyed tamper-proof seal must be replaced.

The CO_2 adjusting screw must be sealed.

Never modify the factory setting of the gas pressure regulator of the gas valve assembly.

7.11.1 Checking the gas connection pressure (gas flow pressure)

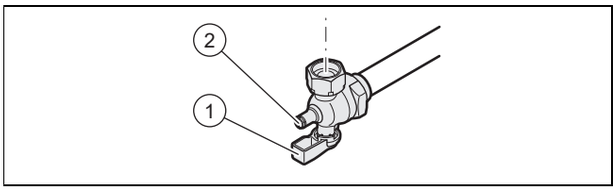

1. Ensure that the gas inlet working pressure can be obtained with all other gas appliances in the property working.
2. Close the gas stopcock **(1)**.
3. Undo the sealing screw on the test nipple **(2)**.
4. Connect a manometer to the test nipple **(2)**.
5. Open the gas stopcock **(1)**.
6. Start up the product with check programme **P.01** (system with eBUS control) or **P.03** (installation without eBUS control).
7. In addition, ensure that maximum heat can be dissipated into the heating system by turning up the room thermostat.
8. With the boiler operating at full load check that the gas inlet working pressure at the reference test point **(2)** complies with the requirements.

Permissible connection pressure

Great Britain	**Natural gas**	**G20**	1.7 … 2 kPa (17.0 … 20 mbar)

9. Should the pressure recorded at the reference test point in the boiler be lower than indicated check if there is any blockage in the pipework or if the pipework is undersized.

Conditions: Gas flow pressure **not** in the permissible range

Caution.

Risk of material damage and operating faults caused by incorrect gas connection pressure.

If the gas connection pressure lies outside the permissible range, this can cause operating faults in and damage to the product.

- ► Do not make any adjustments to the product.
- ► Do not start up the product.

- ► If you cannot correct the failure, notify the gas supply company and proceed as follows:
- ► End check programme P.01.
- ► Allow the boiler to cool down by allowing pump overrun to operate for a minimum of two minutes.
- ► Close the gas stopcock.
- ► Remove the pressure gauge and retighten the sealing screw **(2)** for the measuring nipple.
- ► Open the gas stopcock **(1)**.
- ► Check the test nipple for gas tightness.
- ► Close the gas stopcock **(1)**.
- ► Install the front casing. (→ Page 9)
- ► Disconnect the product from the electrical installation.
- ► You must not start up the boiler.

Conditions: Gas flow pressure **in the** permissible range

- ► End the check programme **P.01**.
- ► Allow the boiler to cool down allowing pump overrun to operate for a minimum of two minutes.
- ► Close the gas stopcock **(1)**.
- ► Remove the pressure gauge and retighten the sealing screw **(2)** for the measuring nipple.
- ► Open the gas stopcock **(1)**.
- ► Check the test nipple for gas tightness.
- ► Install the front casing. (→ Page 9)
- ► Reset boiler controls for normal operation.
- ► Record the appliance gas inlet working pressure (kPa resp. mbar) in the Benchmark gas boiler commissioning checklist.

7.11.2 Checking the leak-tightness of the flue gas installation and flue gas recirculation

1. Check the flue gas installation is intact in accordance with the latest gas safe technical bulletin and information supplied in the installation instructions.
2. For extended flue gas installations check for flue gas recirculation using the air analysis point.
3. Use a flue gas analyser.
4. If you discover CO or CO_2 in the supply air, search for the leak in the flue gas installation or for signs of flue gas recirculation.
5. Eliminate the damage properly.
6. Check again whether the supply air contains any CO or CO_2.
7. If you cannot eliminate the damage, do not start up the product.

7.11.3 Thoroughly flushing the heating installation ("hot")

1. Operate the appliance until the boiler and the heating system are up to temperature.
2. Check the heating system for leaks.
3. Connect a hose to the drain valve located at the lowest position of the heating system.
4. Shut off the boiler, open the drain valve and all purge valves on the radiators and allow the water to flow out of the heating system and the boiler quickly and fully.
5. Close the drain valve.
6. Fill and purge the heating installation. (→ Page 16)
7. Re-fill the system until the system design pressure of 0,1 MPa (1,0 bar) is attained.

Note

The actual reading on the digital pressure gauge should ideally be 0,05 MPa (0,5 bar) plus an additional pressure corresponding to the highest point of the system above the base of the boiler – 10 m head equals an additional 1 bar reading on the pressure gauge. The minimum pressure should not be less than 0,1 MPa (1 bar) in any installation. If the system is to be treated with an inhibitor it should be applied at this stage in accordance with the manufacturer's instructions. Further information can be obtained from Sentinel, Betz Dearborn Ltd., Tel: 0151 420 9595, or Fernox, Alpha– Fry technologies. Tel: 0870 8700362.

8. Install the front casing. (→ Page 9)

7.11.4 Checking the CO_2 content

1. Start up the product with check programme **(P.01)**.
2. Wait until the value that is read is stable.
   – Waiting period for reading a stable value: 5 min

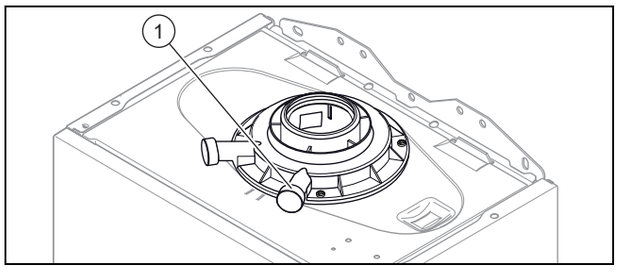

3. Unscrew the cover from the flue gas analysis point **(1)**.
4. Measure the CO_2 content at the flue gas analysis point **(1)**.
5. Compare the measured value with the corresponding value in the table.

Checking the CO_2 content

Great Britain
front casing on / front casing off
Natural gas
G20
9.2 ±1 %

◁ The value is OK.

▽ The value is not OK; you cannot start up the product.

► Inform Customer Service.

7.12 Checking leak-tightness

► Check the gas pipe, the heating circuit and the hot water circuit for leak-tightness.

► Check that the air/flue pipe has been installed correctly.

Conditions: Room-sealed operation

► Check whether the vacuum chamber has been closed tightly.

7.12.1 Checking the heating mode

1. Activate the heating mode on the user interface.
2. Turn all thermostatic radiator valves on the radiators until they are fully open.
3. Allow the product to operate for at least 15 minutes.
4. Fill and purge the heating installation. (→ Page 16)
5. Call up the status codes. (→ Page 14)
   Status codes – Overview (→ Page 31)
   ◁ If the product is working correctly, the display shows **S.04**.

8 Adapting the unit to the heating installation

You can reset/change the system parameters.

Overview of diagnostics codes (→ Page 28)

8.1 Burner anti-cycling time

To prevent frequent switching on and off of the burner and thus prevent energy losses, an electronic restart lockout is activated for a specific period each time the burner is switched off. The burner anti-cycling time is only active for the heating mode. Hot water handling mode during a burner anti-cycling time does not affect the time function element.

8.1.1 Setting the burner anti-cycling time

1. Navigate to diagnostics code **D.002** in the installer level and confirm by pressing ⊟.
2. Set the burner anti-cycling time and confirm by pressing ⊟.

T_{Flow} (target) [°C]	Set maximum burner anti-cycling time [min]						
	1	**5**	**10**	**15**	**20**	**25**	**30**
30	2.0	4.0	8.5	12.5	16.5	20.5	25.0
35	2.0	4.0	7.5	11.0	15.0	18.5	22.0
40	2.0	3.5	6.5	10.0	13.0	16.5	19.5
45	2.0	3.0	6.0	8.5	11.5	14.0	17.0
50	2.0	3.0	5.0	7.5	9.5	12.0	14.0
55	2.0	2.5	4.5	6.0	8.0	10.0	11.5
60	2.0	2.0	3.5	5.0	6.0	7.5	9.0
65	2.0	1.5	2.5	3.5	4.5	5.5	6.5
70	2.0	1.5	2.0	2.5	2.5	3.0	3.5
75	2.0	1.0	1.0	1.0	1.0	1.0	1.0

T_{Flow} (target) [°C]	Set maximum burner anti-cycling time [min]					
	35	**40**	**45**	**50**	**55**	**60**
30	29.0	33.0	37.0	41.0	45.0	49.5
35	25.5	29.5	33.0	36.5	40.5	44.0
40	22.5	26.0	29.0	32.0	35.5	38.5
45	19.5	22.5	25.0	27.5	30.5	33.0
50	16.5	18.5	21.0	23.5	25.5	28.0
55	13.5	15.0	17.0	19.0	20.5	22.5
60	10.5	11.5	13.0	14.5	15.5	17.0
65	7.0	8.0	9.0	10.0	11.0	11.5
70	4.0	4.5	5.0	5.5	6.0	6.5
75	1.0	1.0	1.0	1.0	1.0	1.0

8.1.2 Resetting the remaining burner anti-cycling time

► Press ⊠.

8.2 Setting the pump output

The product is equipped with a speed-regulated high-efficiency pump, which adjusts independently to the hydraulic conditions of the heating installation.

If you have installed a low loss header in the heating installation, you should switch off the speed regulation and set the pump output to a fixed value.

► If required, change the setting of the pump speed, which depends on the operating mode, under diagnostics code **d.14**.
Overview of diagnostics codes (→ Page 28)

8.2.1 Pump diagrams

12s:

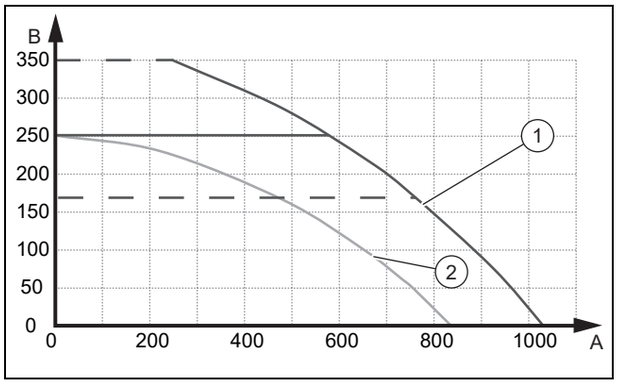

A	Remaining feed head [mbar]	1	Max. PWM
B	Flow rate [l/h]	2	Min. PWM

15s:

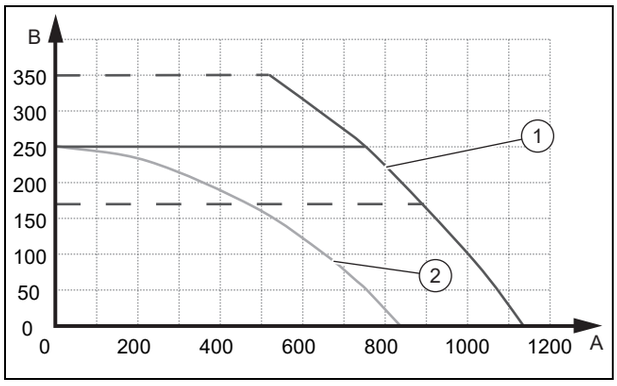

A	Remaining feed head [mbar]	1	Max. PWM
B	Flow rate [l/h]	2	Min. PWM

18s:

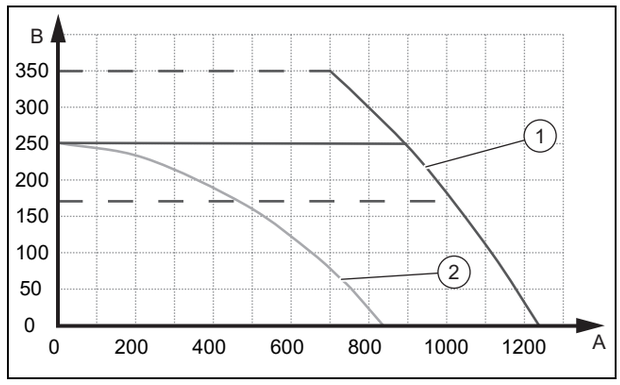

A	Remaining feed head [mbar]	1	Max. PWM
B	Flow rate [l/h]	2	Min. PWM

25s:

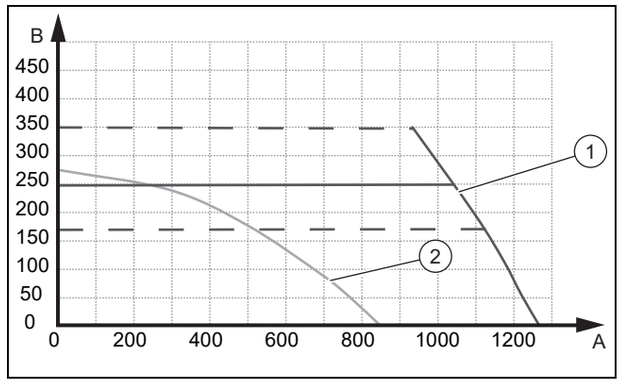

A	Remaining feed head [mbar]	1	Max. PWM
B	Flow rate [l/h]	2	Min. PWM

30s:

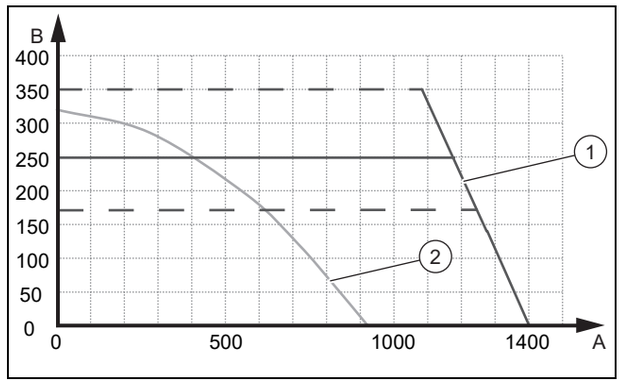

A	Remaining feed head [mbar]	1	Max. PWM
B	Flow rate [l/h]	2	Min. PWM

8.3 Setting the bypass valve

Caution.

Risk of material damage caused by incorrect setting of the high-efficiency pump

If the pressure at the bypass valve is increased (by turning it clockwise) and the pump output is set to less than 100%, the product may not operate correctly.

► In this case, set the pump output to 5 = 100% using diagnostics parameter **d.14**.

Conditions: **d.14** is set to 0 = auto

► Do not change the factory settings.

Conditions: **d.14** is set to 1 - 5

► Remove the front casing. (→ Page 9)

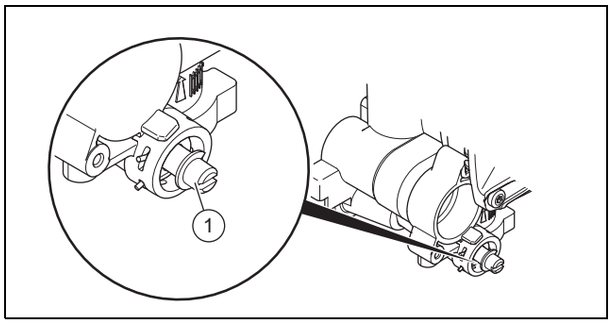

► Regulate the pressure using the adjusting screw **(1)**.

Position of the adjusting screw	Notes/application
Right-hand stop (screwed all the way in)	If the radiators do not heat up sufficiently at the default setting. In this case, you must set the pump to the maximum speed.
Mid-position (six anti-clockwise rotations)	Default setting
Five further anti-clockwise rotations starting from the mid-position	If noises are produced in the radiators or radiator valves.

► Install the front casing. (→ Page 9)

8.4 Setting the hot water temperature

Danger!

Risk of death from legionella.

Legionella multiply at temperatures below 60 °C.

► Ensure that the end user is familiar with all of the Anti-legionella measures in order to comply with the applicable regulations regarding legionella prevention.

► Set the hot water temperature.

Conditions: Water hardness: > 3.57 mol/m³

– Hot water temperature: ≤ 50 °C

9 Handing the product over to the end user

At the time of commisioning complete all relevant sections of the Benchmark, located at the rear of this document.

► When you have finished the installation, attach the sticker supplied (in the end user's language) to the product cover.
► Explain to the end user how the safety devices work and where they are located.
► Inform the end user how to handle the product.
► In particular, draw attention to the safety information which the end user must follow.
► Inform the end user that they must have the product maintained in accordance with the specified intervals.
► Instruct the end user about measures taken for routing the combustion air supply and flue system.
► Complete and sign off the Benchmark commissioning check list.
► Complete and sign off the guarantee documentation.

10 Troubleshooting

10.1 Eliminating faults

► If fault messages (**F.xx**) appear, eliminate the fault after referring to the table in the appendix or using the check programmes. (→ Page 14)
Overvi[illegible] of fault codes (→ Page 32)

If several faults occur at the same time, the display shows the corresponding fault messages for two seconds each in alternation.

► Press (max. three times) to restart the product.
► If you are unable to eliminate the fault and the fault recurs despite reset attempts, contact customer service.

10.2 Procuring spare parts

The original components of the product were also certified by the manufacturer as part of the declaration of conformity. If you use other, non-certified or unauthorised parts during maintenance or repair work, this may void the conformity of the product and it will therefore no longer comply with the applicable standards.

We strongly recommend that you use original spare parts from the manufacturer as this guarantees fault-free and safe operation of the product. To receive information about the available original spare parts, contact the contact address provided on the reverse of these instructions.

► If you require spare parts for maintenance or repair work, use only the spare parts that are permitted for the product.

10.3 Calling up and clearing the fault memory

The last 10 fault messages are stored in the fault memory.

- ► Call up the installer level. (→ Page 14)
- ► Navigate to the **fault codes**.
  - ◁ The number of faults that have occurred is shown in the display and the faults that are currently called up are displayed with their fault numbers **F.xx**.
- ► Press ⊖ or ⊕ to call up individual fault messages.
- ► To delete the entire fault list, navigate to diagnostics code **D.094** in the installer level.
- ► Set the diagnostics code to **1**, and confirm by pressing ⊡.

10.4 Resetting parameters to factory settings

1. Navigate to diagnostics code **D.096** in the installer level.
2. Set the diagnostics code to 1, and confirm by pressing ⊡.

10.5 Preparing the repair work

1. Switch off the product.
2. Disconnect the product from the electrical installation.
3. Remove the front casing.
4. Close the gas stopcock.
5. Close the service valves in the heating flow and in the heating return.
6. Close the service valve in the cold water pipe.
7. Drain the product if you want to replace water-bearing components of the product.
8. Ensure that water does not drip on live components (e.g. the electronics box).
9. Use only new seals and O-rings. Do not use any additional sealing materials.

10.6 Replacing defective components

10.6.1 Replacing the burner

1. Remove the gas-air mixture unit. (→ Page 25)
2. Remove the two burner seals.
3. Remove the burner.
4. Insert the new burner.
5. Insert two new burner seals in the burner cover.
6. Install the gas-air mixture unit. (→ Page 27)

10.6.2 Replacing the gas-air mixture unit

1. Remove the gas-air mixture unit. (→ Page 25)
2. Install the new gas-air mixture (→ Page 27).

10.6.3 Replacing the heat exchanger

1. Remove the front casing. (→ Page 9)
2. Remove the gas-air mixture unit. (→ Page 25)

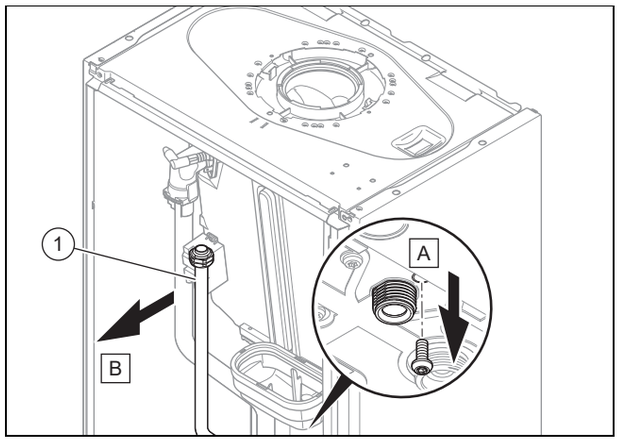

3. Remove the gas pipe **(1)**.

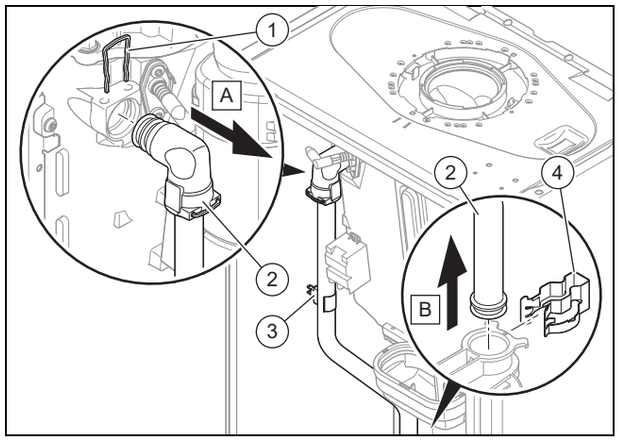

4. Remove the temperature sensor **(3)**.
5. Remove the upper clip **(1)**.
6. Remove the lower clip **(4)**.
7. Remove the supply pipe **(2)**.

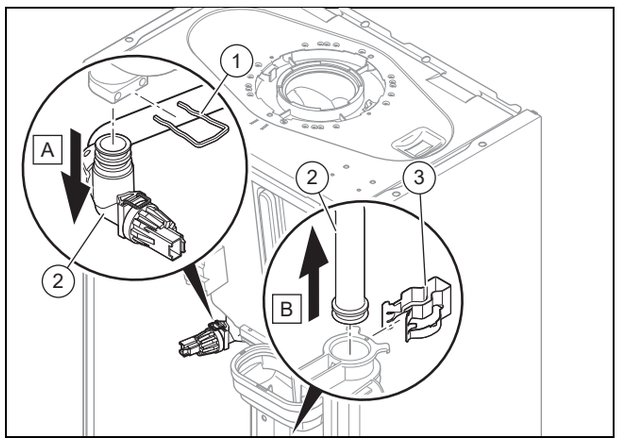

8. Remove the upper clip **(1)**.
9. Remove the lower clip **(3)**.
10. Remove the return pipe **(2)**.

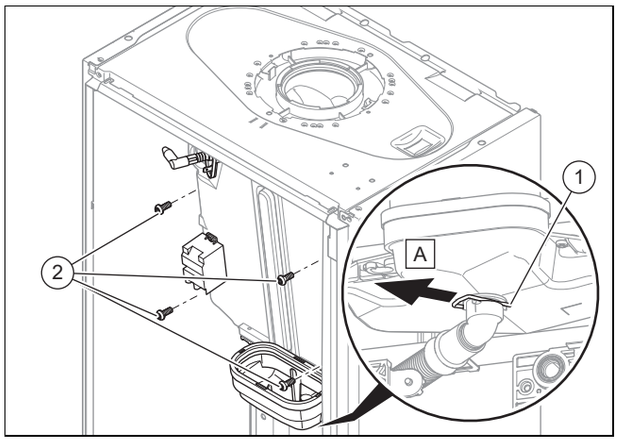

11. Remove the clip underneath the condensate tray **(1)**.
12. Undo the four screws **(2)**.

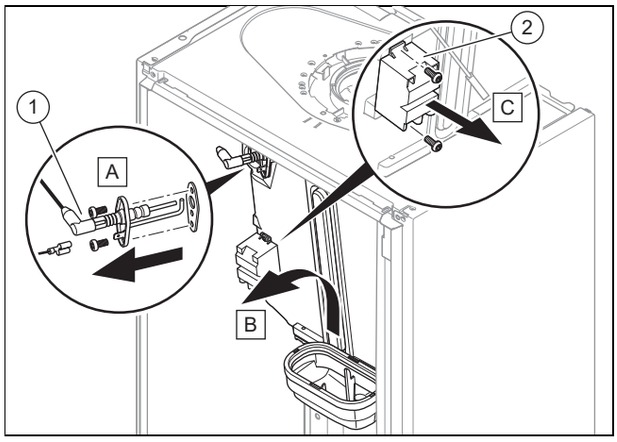

13. Remove the ignition electrode **(1)**.
14. Lift the heat exchanger up slightly and remove it together with the condensate tray.
15. Remove the ignition transformer **(2)**.
16. Install the new heat exchanger in reverse order.

10.6.4 Replacing the pump head

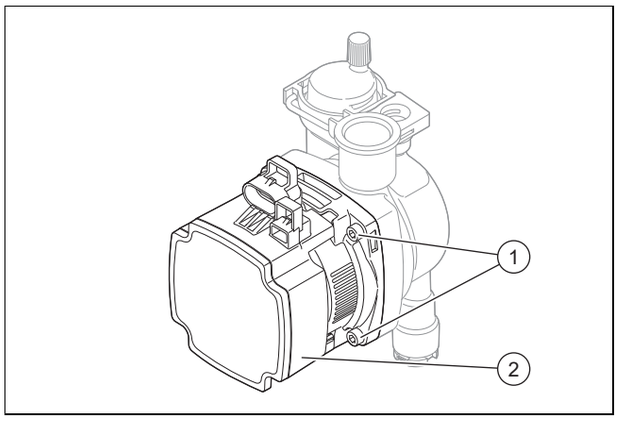

1. Disconnect the pump cable from the electronics box.
2. Undo the four bolts **(1)**.
3. Remove the pump head **(2)**.
4. Replace the O-ring.
5. Use four screws to secure the new pump head.
6. Connect the pump cable to the electronics box.

10.6.5 Replacing the expansion vessel

1. Drain the product. (→ Page 27)

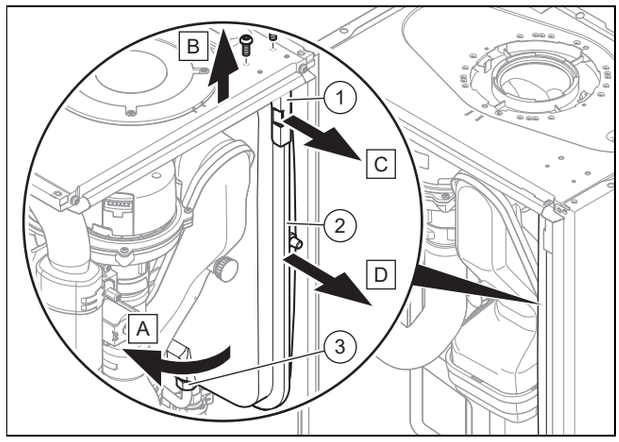

2. Undo the nut **(3)**.
3. Remove both screws on the support plate **(1)**.
4. Remove the support plate.
5. Pull out the expansion vessel **(2)** towards the front.
6. Insert the new expansion vessel into the product.
7. Screw the new expansion vessel to the water connection. To do this, use a new seal.
8. Attach the support plate using both screws.
9. Fill and purge the product (→ Page 16) and, if required, the heating installation.

10.6.6 Replacing the main PCB

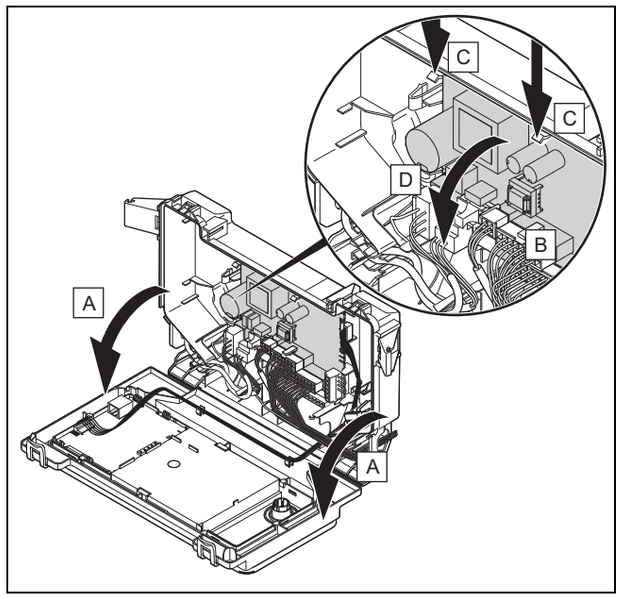

1. Open the electronics box. (→ Page 12)
2. Pull all of the plugs out from the PCB.
3. Undo the clips on the PCB.
4. Remove the PCB.
5. Install the new PCB in such a way that it clicks into the groove at the bottom and into the clip at the top.
6. Plug in the PCB plugs.
7. Close the electronics box.

10.6.7 Replacing the PCB for the user interface

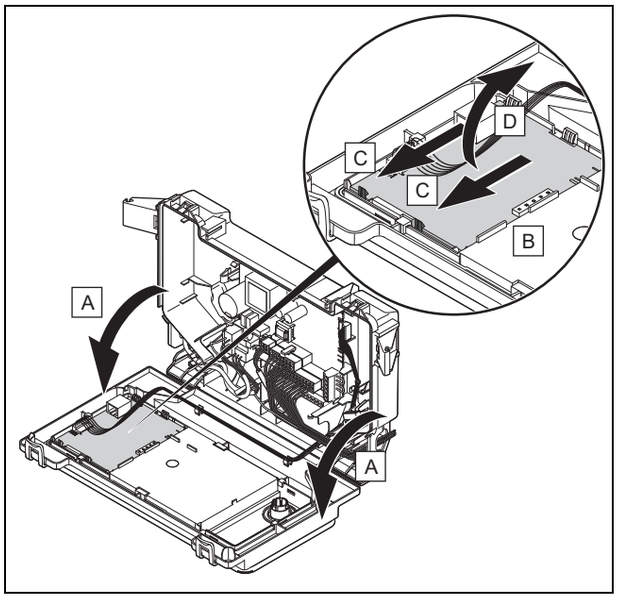

1. Open the electronics box. (→ Page 12)
2. Pull the plug out of the PCB.
3. Undo the clips on the PCB.
4. Remove the PCB.
5. Install the new PCB in such a way that it clicks into the groove at the bottom and into the clip at the top.
6. Plug in the PCB plug.
7. Close the electronics box.

10.6.8 Replacing the expansion relief valve

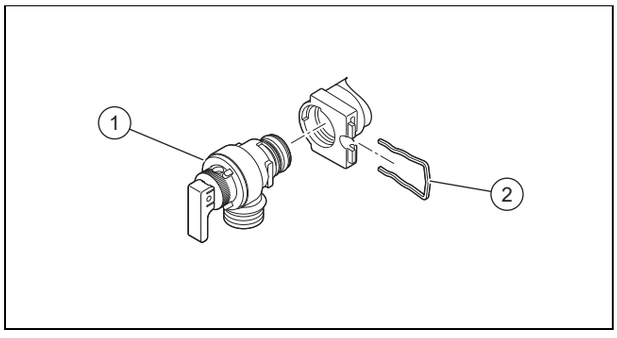

1. Remove the clip **(2)**.
2. Remove the expansion relief valve.
3. Fit the new expansion relief valve with a new O-ring.
4. Reattach the clip **(2)**.

10.6.9 Replace the pressure sensor

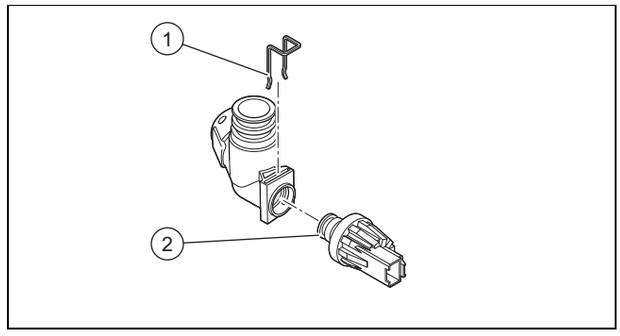

1. Pull out the plug.
2. Remove the clip **(1)**.
3. Remove the pressure sensor **(2)**.
4. Install the new pressure sensor.
5. Reattach the clip **(1)**.

10.7 Checking the product for leak-tightness

► Check that the product is leak-tight. (→ Page 19)

11 Inspection and maintenance

11.1 Using original seals

If you replace components, use only the enclosed original seals; additional sealing materials are not required.

11.2 Observing inspection and maintenance intervals

► Comply with the minimum clearances for the inspection and maintenance. Depending on the results of the inspection, it may be necessary to bring maintenance work forward.
  – Inspection and maintenance work (→ Appendix)

11.3 Checking the CO_2 content

1. Start up the product with check programme **(P.01)**.
2. Wait until the value that is read is stable.
   – Waiting period for reading a stable value: 5 min

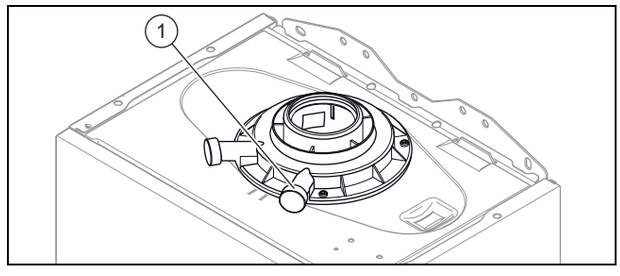

3. Unscrew the cover from the flue gas analysis point **(1)**.
4. Measure the CO_2 content at the flue gas analysis point **(1)**.
5. Compare the measured value with the corresponding value in the table.

Checking the CO_2 content

Great Britain
front casing on / front casing off
Natural gas
G20
9.2 ±1 %

◁ The value is OK.

▽ The value is not OK; you cannot start up the product.

► Set the CO_2 content. (→ Page 25)

11.4 Setting the CO_2 content

Conditions: The CO_2 content must be adjusted

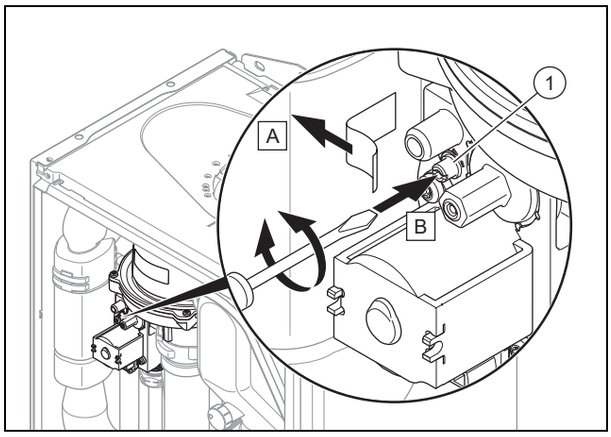

► Remove the sticker.

► Turn the screw **(1)** to set the CO_2 content (value with front casing removed).

◁ To increase the CO_2 content: Turn anti-clockwise

◁ To decrease the CO_2 content: Turn clockwise

► Only carry out the adjustment in increments of 1/8 turn and wait approximately 1 minute after each adjustment until the value has stabilised.

► Compare the measured value with the corresponding value in the table.

Setting the CO_2 value

	Great Britain
	front casing on / front casing off
	Natural gas
	G20
CO_2 at full load	9.2 ±0.2 %
Set for Wobbe index W_o	14.09 kW·h/m³
O_2 at full load	4.5 ±1.8 vol. %
CO at full load	≤ 250 ppm
CO/CO_2	≤ 0.0027

▽ If the setting is not in the specified adjustment range, you must not start up the product.

► Inform Customer Service.

► Check whether the air-quality requirements with regard to carbon monoxide are fulfilled.

► Fit the front panel.

11.5 Removing the gas-air mixture unit

Note

The gas-air mixture unit consists of three main components:

– Fan

– Gas valve,

– Burner cover

1. Switch off the product via the main switch.
2. Close the gas isolator cock.
3. Remove the front casing. (→ Page 9)

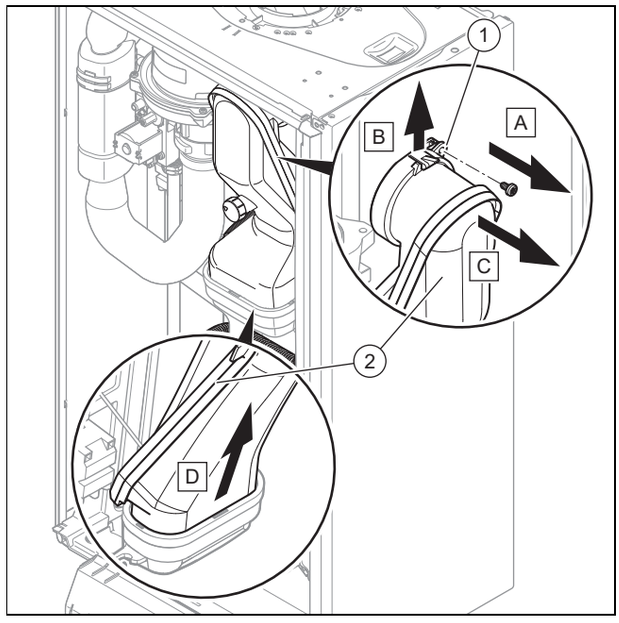

4. Remove the screw **(1)**.
5. Push the clip upwards.
6. Remove the flue gas pipe **(2)**.

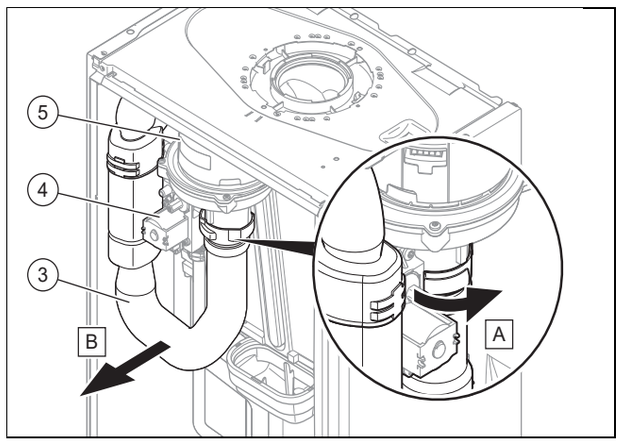

7. Remove the air intake pipe **(3)**.
8. Remove the plugs from the gas valve **(4)** and from the fan **(5)**.

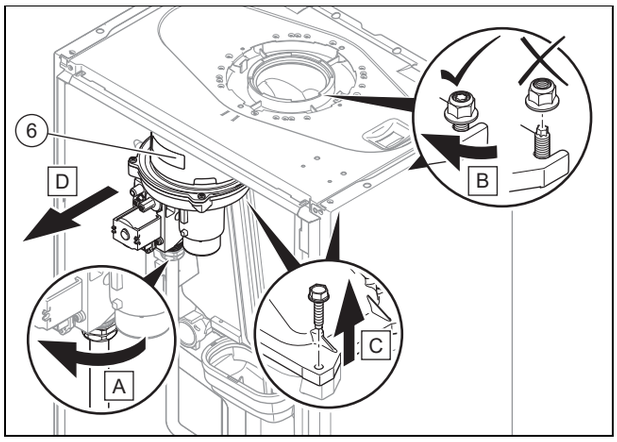

9. Remove the gas-air mixture unit **(6)**.

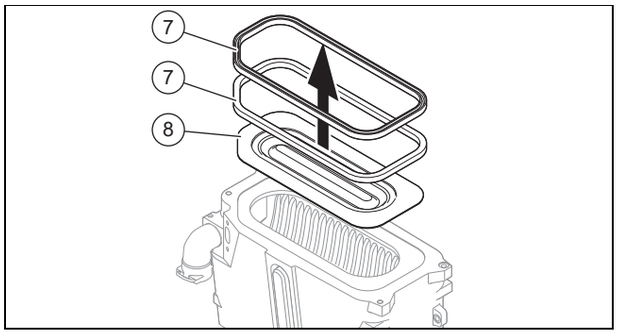

10. Remove the burner seals **(7)** and the burner **(8)**.
11. Check the burner and the heat exchanger for damage and dirt.
12. If necessary, clean or replace the components according to the following sections.
13. Install the two new burner seals.

11.6 Cleaning the heat exchanger

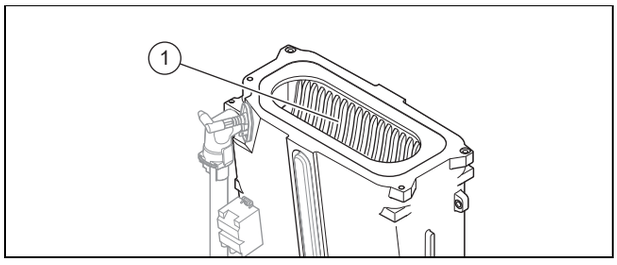

1. Protect the folded down electronics box against sprayed water.
2. Clean the ribs of the heat exchanger **(1)** with water.
   ◁ The water runs out into the condensate tray.

11.7 Checking the burner

1. Search the surface of the burner for possible damage. If you see any damage, replace the burner.
2. Install the two new burner seals.

11.8 Checking the ignition electrode

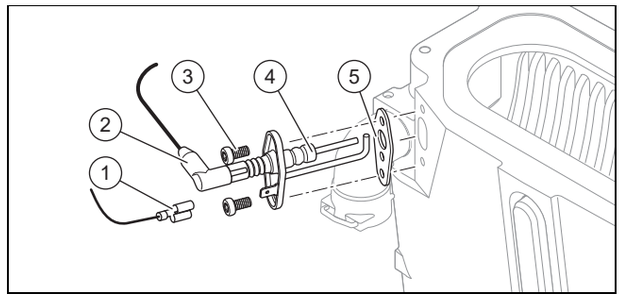

1. Disconnect the connection **(2)** and the earthing cable **(1)**.
2. Remove the fixing screws **(3)**.
3. Carefully remove the electrode from the combustion chamber.
4. Check that the electrode ends **(4)** are undamaged.
5. Check the electrode distance.
   – Clearance for the ignition electrodes: 3.5 … 4.5 mm
6. Make sure that the seal **(5)** is free from damage.
   ▽ If necessary, replace the seal.

11.9 Cleaning the condensate trap

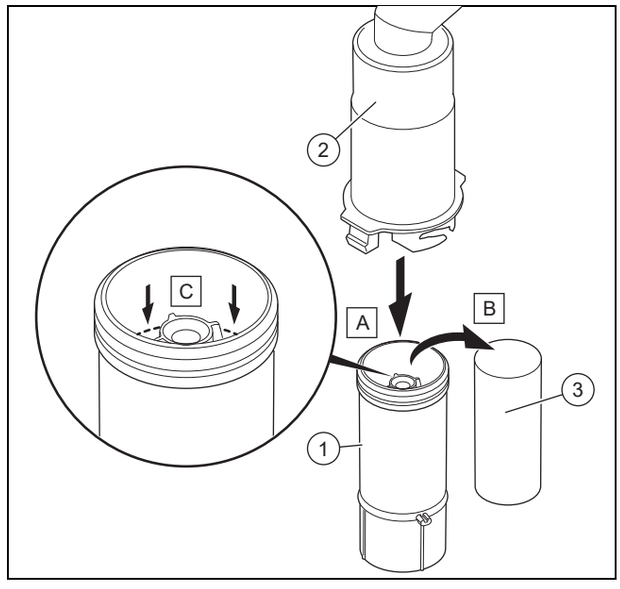

1. Unclip the lower section of the condensate trap **(1)** from the upper section of the condensate trap **(2)**.
2. Remove the float **(3)**.
3. Flush out the float and lower section of the condensate trap with water.
4. Fill the lower section of the condensate trap with water up to 10 mm below the upper edge of the condensate discharge pipe.
5. Re-insert the float **(3)**.

Note
Check whether the float is present in the condensate trap.

6. Clip the lower section of the condensate trap **(1)** into the upper section of the condensate trap **(2)**.

11.10 Installing the gas-air mixture unit

1. Install the burner.
2. Install two new burner seals in the burner hood.
3. Install the gas-air mixture unit.
4. Tighten the screws on the gas-air mixture unit.
   – Ideally to 7 Nm if a torque spanner is available.
5. Install the flue pipe.
6. Install the air intake pipe.

11.11 Draining the product

1. Close the service valves of the product.
2. Start check programme **P.05**.
   Overview of the check programmes (→ Page 14)
3. Open the drain valves.

11.12 Checking the admission pressure of the expansion vessel

1. Drain the product. (→ Page 27)
2. Measure the pre-charge pressure of the expansion vessel at the vessel valve.

Conditions: Pre-charge pressure < 0.075 MPa (0.75 bar)

► Top up the expansion vessel in accordance with the static height of the heating installation, ideally with nitrogen, otherwise with air. Ensure that the drain valve is open when topping up.

3. If water escapes from the valve of the expansion vessel, you must replace the expansion vessel (→ Page 23).
4. Fill and purge the heating installation. (→ Page 16)

11.13 Completing inspection and maintenance work

1. Check the gas connection pressure (gas flow pressure). (→ Page 17)
2. Check the CO_2 content. (→ Page 18)
3. If required, reset the maintenance interval. (→ Page 37)
4. Check the product for tightness. (→ Page 19)
5. Install the front casing.
6. Fill out the relevant Service Record section in the Benchmark Checklist located in the rear of this document.

12 Decommissioning the product

► Switch off the product.
► Disconnect the product from the electrical installation.
► Close the gas stopcock.
► Close the cold-water isolation valve.
► Drain the product. (→ Page 27)

13 Customer service

To ensure regular servicing, it is strongly recommended that arrangements are made for a Maintenance Agreement. Please contact Vaillant Service Solutions for further details:

Telephone: 0330 100 3461

Appendix

A Overview of diagnostics codes

Note
Since the code table is used for various products, some codes may not be visible for the product in question.

Diagnostics code	Parameter	Values		Unit	Increment, select, explanation	Default setting	Own setting
		Min.	Max.				
d.00	Heating maximum output	–	–	kW	The maximum heating output varies depending on the product. → Section "Technical data" Automatic: Unit automatically adjusts the maximum output to the current system demand	→ Section "Technical data"	Adjustable
d.01	Pump overrun in heating mode	1	60	min	1	5	Adjustable
d.02	Maximum burner anti-cycling time in heating mode	2	60	min	1	20	Adjustable
d.04	Water temperature in the cylinder	Current value		°C	–	–	Not adjustable
d.05	Determined heating flow set target temperature	Current value		°C	–	–	Not adjustable
d.06	Hot water set target temperature	Current value		°C	(Combination unit only)	–	Not adjustable
d.07	Set target temperature for the domestic hot water cylinder	Current value		°C	–	–	Not adjustable
d.08	Status of the 230 V thermostat	Current value		–	0 = Room thermostat open (no heat requirement) 1 = Room thermostat closed (heat requirement)	–	Not adjustable
d.09	Heating flow set target temperature that is set on the eBUS room thermostat	Current value		°C	–	–	Not adjustable
d.10	Status of the internal pump in the heating circuit	Current value		–	off / on	–	Not adjustable
d.11	Status of the heating circuit's shunt pump	Current value		–	off / on	–	Not adjustable
d.13	Status of the hot water circuit's circulation pump	Current value		–	off / on	–	Not adjustable
d.14	Operating mode of the modulating pump	0	5	–	0 = variable rotational speed (auto) 1; 2; 3; 4; 5 = Fixed rotational speeds → Section "Setting the pump output"	0	Adjustable
d.15	Pump speed	Current value		%	–	–	Not adjustable
d.16	Status of the 24 V room thermostat	Current value		–	off = Heating off on = Heating on	–	Not adjustable
d.17	Heating control	–	–	–	off = Flow temperature on = Return temperature (adjustment for underfloor heating. If you have activated the return temperature control, the automatic heating output determination function is not active.)	0	Adjustable

Diagnostics code	Parameter	Values		Unit	Increment, select, explanation	Default setting	Own setting
		Min.	Max.				
d.18	Pump overrun operating mode	1	3	–	1 = Continuous (pump runs permanently) 3 = Eco (intermittent pump mode – for the dissipation of the residual heat after hot water generation at an extremely low heat demand)	1	Adjustable
d.19	Pump operating mode, 2 stage pump	0	3	–	0 = Burner mode stage 2, pump flow/overrun stage 1 1 = Heating mode and pump flow/overrun stage 1, hot water handling mode stage 2 2 = Automatic heating mode, pump flow/overrun stage 1, hot water handling mode stage 2 3 = Stage 2	3	Adjustable
d.20	Maximum hot water set target temperature	50	60	°C	1	60	Adjustable
d.21	Status of the warm start for hot water	Current value		–	off = Function deactivated on = Function activated and available	–	Not adjustable
d.22	Status of the hot water request	Current value		–	off = No current requirement on = Current requirement	–	Not adjustable
d.23	Status of the heating demand	Current value		–	off = Heating off (Summer mode) on = Heating on	–	Not adjustable
d.24	Status of the pressure monitor	0	1	–	off = Not switched on = Switched	–	Not adjustable
d.25	Status of the requirement to reheat the cylinder or for the hot water warm start from the eBUS thermostat	Current value		–	off = Function deactivated on = Function activated	–	Not adjustable
d.27	Function of relay 1 (multi-functional module)	1	10	–	1 = Circulation pump 2 = External pump 3 = Cylinder charging pump 4 = Extractor hood 5 = External solenoid valve 6 = Fault display 7 = Solar pump (omitted) 8 = eBUS remote control 9 = Legionella protection pump 10 = Solar valve	1	Adjustable
d.28	Function of relay 2 (multi-functional module)	1	10	–	1 = Circulation pump 2 = External pump 3 = Cylinder charging pump 4 = Extractor hood 5 = External solenoid valve 6 = Fault display 7 = Solar pump (omitted) 8 = eBUS remote control 9 = Legionella protection pump 10 = Solar valve	2	Adjustable
d.31	Automatic filling device	0	2	–	0 = Manual 1 = Semi-automatic 2 = Automatic	0	Adjustable
d.33	Fan speed target value	Current value		rpm	Fan speed = Display value x 100	–	Not adjustable
d.34	Value for the fan speed	Current value		rpm	Fan speed = Display value x 100	–	Not adjustable

Diagnostics code	Parameter	Values		Unit	Increment, select, explanation	Default setting	Own setting
		Min.	Max.				
d.35	Position of the diverter valve	Current value		–	0 = Heating 40 = Mid-position (parallel operation) 100 = Domestic hot water	–	Not adjustable
d.36	Value for the hot water flow	Current value		l/min	–	–	Not adjustable
d.39	Water temperature in the solar circuit	Current value		°C	–	–	Not adjustable
d.40	Heating flow temperature	Current value		°C	–	–	Not adjustable
d.41	Heating return temperature	Current value		°C	–	–	Not adjustable
d.43	Heating curve	0.2	4	–	0.1	1.2	Adjustable
d.45	Value for the base point of the heating curve	15	30	–	1	20	Adjustable
d.47	Outside temperature	Current value		°C	–	–	Not adjustable
d.50	Correction of the minimum fan speed	0	3000	rpm	1 Fan speed = Display value x 10	600	Adjustable
d.51	Correction of the maximum fan speed	-2500	0	rpm	1 Fan speed = Display value x 10	-1000	Adjustable
d.58	Solar circuit reheating	0	3	–	0 = Boiler's Legionella protection function deactivated 3 = Hot water activated (min. target value 60 °C)	0	Adjustable
d.60	Number of blocks by the temperature limiter	Current value		–	–	–	Not adjustable
d.61	Number of unsuccessful ignitions	Current value		–	–	–	Not adjustable
d.62	Night set-back	0	30	–	1	0	Adjustable
d.64	Average burner ignition time	Current value		s	–	–	Not adjustable
d.65	Maximum burner ignition time	Current value		s	–	–	Not adjustable
d.66	Activation of the warm start function for hot water	–	–	–	off = Function deactivated on = Function activated	1	Adjustable
d.67	Remaining burner anti-cycling time (setting under d.02)	Current value		min	–	–	Not adjustable
d.68	Number of unsuccessful ignitions at 1st attempt	Current value		–	–	–	Not adjustable
d.69	Number of unsuccessful ignitions at 2nd attempt	Current value		–	–	–	Not adjustable
d.70	Operation of the diverter valve	0	2	–	0 = Normal operating mode (DHW and heating mode) 1 = Mid-position (parallel operation) 2 = Permanent heating mode position	0	Adjustable
d.71	Maximum heating flow set target temperature	45	80	°C	1	→ Section "Technical data"	Adjustable
d.73	Correction of the hot water warm start temperature	-15	5	K	1	0	Adjustable
d.75	Maximum cylinder reheating time	20	90	min	1	45	Adjustable
d.77	Max. cylinder reheating	–	–	kW	1 → Section "Technical data"	–	Adjustable

Diagnostics code	Parameter	Values		Unit	Increment, select, explanation	Default setting	Own setting
		Min.	Max.				
d.80	Running time in heating mode	Current value		h	Running time = Display value x 100	–	Not adjustable
d.81	Running time in hot water handling mode	Current value		h	Running time = Display value x 100	–	Not adjustable
d.82	Number of burner ignitions in heating mode	Current value		–	Number of ignitions = Display value x 100	–	Not adjustable
d.83	Number of burner ignitions in hot water handling mode	Current value		–	Number of ignitions = Display value x 100	–	Not adjustable
d.84	Maintenance in	0	3000	h	Number of hours = Display value x 10	300	Not adjustable
d.85	Increase in the min. output (heating and hot water handling mode)	–	–	kW	1	–	Adjustable
d.88	Flow rate limit value for ignition in hot water handling mode	0	1	–	0 = 1.7 l/min (no delay) 1 = 3.7 l/min (2 s delay)	0	Adjustable
d.90	Status of the eBUS room thermostat	Current value		–	off = Not connected on = Connected	–	Not adjustable
d.91	Status DCF77	Current value		–	–	–	Not adjustable
d.93	Setting the product code	0	99	–	1 The Device Specific Number (DSN) can be found on the identification plate.	–	Adjustable
d.94	Delete fault list	0	1	–	off = No on = Yes	–	Adjustable
d.95	Software versions	–	–	–	1 = Main PCB 2 = Interface PCB	–	Adjustable
d.96	Default setting (reset)	–	–	–	0 = No 1 = Yes	–	Adjustable

B Status codes – Overview

Note
Since the code table is used for various products, some codes may not be visible for the product in question.

Status code	Meaning
Displays in heating mode	
S.0	Heating mode: No requirement
S.01	Heating mode: Advance fan operation
S.02	Heating mode: Pump pre-run
S.03	Heating mode: Burner ignition
S.04	Heating mode: Burner on
S.05	Heating mode: Pump/fan overrun
S.06	Heating mode: Fan overrun
S.07	Heating mode: Pump overrun
S.08	Heating mode: Temporary shutdown after heating procedure
Displays in hot water handling mode	
S.10	Hot water handling mode: Requirement
S.11	Hot water handling mode: Advance fan operation
S.13	Hot water handling mode: Burner ignition
S.14	DHW mode: Burner on
S.15	DHW mode: Pump/fan overrun

Status code	Meaning
S.16	DHW mode: Fan overrun
S.17	DHW mode: Pump overrun
Display in Comfort mode with warm start or hot water handling mode with cylinder	
S.20	Hot water handling mode: Requirement
S.21	Hot water handling mode: Advance fan operation
S.22	Hot water handling mode: Pump pre-run
S.23	Hot water handling mode: Burner ignition
S.24	DHW mode: Burner on
S.25	DHW mode: Pump/fan overrun
S.26	DHW mode: Fan overrun
S.27	DHW mode: Pump overrun
S.28	Hot water handling mode: Temporary shutdown of the burner
Other displays	
S.30	Room thermostat is blocking heating mode.
S.31	No heating demand: Summer mode, eBUS controller, waiting period
S.32	Fan waiting time: Fan speed outside of the tolerance values
S.33	Forced fan operation until the pressure monitor is switched
S.34	Frost protection active
S.39	Underfloor heating contact open
S.41	Water pressure too high
S.42	Flue non-return flap closed
S.46	Frost protection mode (Comfort): Minimum load
S.53	Product in waiting period/operation block function due to low water pressure (flow/return spread too large)
S.54	Waiting period: Low water pressure in the circuit (flow/return spread too large)
S.76	Maintenance message: Check the water pressure
S.88	Product purging active
S.91	Maintenance: Demo mode
S.96	Automatic test programme: Return temperature sensor, heating demands blocked.
S.97	Automatic test programme: Water pressure sensor, heating demands blocked.
S.98	Automatic test programme: Return temperature sensor, heating demands blocked.
S.99	Internal automatic test programmes
S.108	Purging the combustion chamber, fan in operation
S.109	Product's standby mode activated

C Overview of fault codes

Note
Since the code table is used for various products, some codes may not be visible for the product in question.

Fault code	Meaning	Possible cause
F.00	Fault: Flow temperature sensor	NTC plug not plugged in or has come loose, multiple plug on the PCB not plugged in correctly, interruption in cable harness, NTC sensor defective
F.01	Fault: Return temperature sensor	NTC plug not plugged in or has come loose, multiple plug on the PCB not plugged in correctly, interruption in cable harness, NTC sensor defective
F.10	Short circuit: Flow temperature sensor	NTC sensor defective, short circuit in the cable harness, cable/casing
F.11	Short circuit: Return temperature sensor	NTC sensor defective, short circuit in the cable harness, cable/casing
F.12 and F.91	Short circuit: Cylinder temperature sensor	NTC sensor defective, short circuit in the cable harness, cable/casing
F.13	Short circuit: Domestic hot water cylinder temperature sensor	NTC sensor defective, short circuit in the cable harness, cable/casing

Fault code	Meaning	Possible cause
F.20	Safety switch-off: Overheating temperature reached	Incorrect earth connection between cable harness and product, flow or return NTC defective (loose connection), stray spark via ignition cable, ignition plug or ignition electrode
F.22	Safety switch-off: Low water pressure in the boiler	No or insufficient water in the product, water pressure sensor defective, cable to the pump or to the water pressure sensor loose/not connected/defective
F.23	Safety switch-off: Temperature difference too great (NTC1/NTC2)	Pump blocked, insufficient pump output, air in product, flow and return NTC sensors connected the wrong way round
F.24	Safety switch-off: Temperature rise too fast	Pump blocked, insufficient pump output, air in product, system pressure too low, non-return valve blocked/incorrectly installed
F.25	Safety switch-off: Flue gas temperature too high	Break in plug connection for optional flue gas safety cut-out (STB), break in cable harness
F.27	Safety switch-off: Fault in flame detection	Moisture on the electronics, electronics (flame monitor) defective, gas solenoid valve leaking
F.28	Fault: Ignition unsuccessful when starting up	Gas meter defective or gas pressure monitor has triggered, air in gas, gas flow pressure too low, thermal isolator device (TAE) has triggered, incorrect gas restrictor, incorrect spare gas valve, fault on the gas valve, multiple plug on PCB incorrectly plugged in, break in cable harness, ignition system (ignition transformer, ignition cable, ignition plug, ignition electrode) defective, ionisation current interrupted (cable, electrode), incorrect earthing of product, electronics defective
F.29	Fault: Flame loss	Gas supply temporarily stopped, flue gas recirculation, incorrect earthing of product, ignition transformer has spark failure
F.32	Fan frost protection function active: Fan speed outside the tolerance values	Plug on fan not correctly plugged in, multiple plug on PCB not correctly plugged in, break in cable harness, fan blocked, Hall sensor defective, electronics defective
F.49	eBUS fault: Voltage too low	Short circuit on eBUS, eBUS overload or two power supplies with different polarities on the eBUS
F.61	Fault: Gas valve control system	Short circuit/short to earth in cable harness for the gas valve, gas valve defective (coils shorted to earth), electronics defective
F.62	Fault: Gas valve switch-off control	Delayed switch-off of gas valve, delayed extinguishing of flame signal, gas valve leaking, electronics defective
F.63	Fault: EEPROM	Electronics defective
F.64	Fault: Electronics/sensor/analogue-to-digital converter	Flow or return NTC short circuited, electronics defective
F.65	Fault: Electronics temperature too high	Electronics overheating due to external influences, electronics defective
F.67	Value sent back by ASIC is incorrect (flame signal)	Implausible flame signal, electronics defective
F.68	Fault: Unstable flame (analogue input)	Air in gas, gas flow pressure too low, incorrect air ratio, incorrect gas restrictor, ionisation flow interruption (cable, electrode)
F.70	Invalid product code (DSN)	Display and PCB replaced at same time and Device Specific Number not reset, wrong or missing output range coding resistance
F.71	Fault: Flow/return temperature sensor	Flow temperature sensor signalling constant value: Flow temperature sensor incorrectly positioned on supply pipe, flow temperature sensor defective
F.72	Fault: Deviation in the water pressure sensor/return temperature sensor	Flow/return NTC temperature difference too great → flow and/or return temperature sensor defective
F.73	Fault: Water pressure sensor not connected or has short-circuited	Interruption/short circuit of water pressure sensor, interruption/short circuit to GND in supply line to water pressure sensor or water pressure sensor defective
F.74	Fault: Electrical problem in the water pressure sensor	Line to water pressure sensor has a short circuit to 5 V/24 V or internal fault in the water pressure sensor
F.75	Fault: Pressure sensor	Pressure switch defective
F.76	The safety cut-out in the primary heat exchanger is defective	Safety cut-out feedback does not match the gas valve feedback
F.77	Fault: Condensate or smoke	No response, flue non-return flap defective
F.78	Interruption to DHW outlet sensor at external controller	UK link box is connected, but hot water NTC not bridged
F.83	Fault: Dry fire	When the burner starts, the temperature change registered at the flow or return temperature sensor is non-existent or too small: Insufficient water in the product, the flow or return temperature sensor is not in the correct position on the pipe

Fault code	Meaning	Possible cause
F.84	Fault: Flow/return temperature sensor	Values not consistent, difference < -6 K Flow and return temperature sensors signalling implausible values: Flow and return temperature sensors have been inverted, flow and return temperature sensors have not been correctly installed
F.85	Fault: Temperature sensor	The flow and/or return temperature sensors have been installed on the same pipe/incorrect pipe Temperature sensor not connected or is connected incorrectly
F.86	Fault: Underfloor heating contact	Underfloor heating contact open, sensor disconnected or defective
F.87	Fault: Electrodes	Electrodes not connected or they are connected incorrectly, short circuit in the cable harness
F.88	Fault: Gas valve	Gas valve not connected or it is connected incorrectly, short circuit in the cable harness
F.89	Fault: Pump	Pump not connected or it is connected incorrectly, incorrect pump connected, short circuit in the cable harness
Connection	No communication between the PCB and the user interface	Electronics defective

D Wiring diagram: Pure boiler

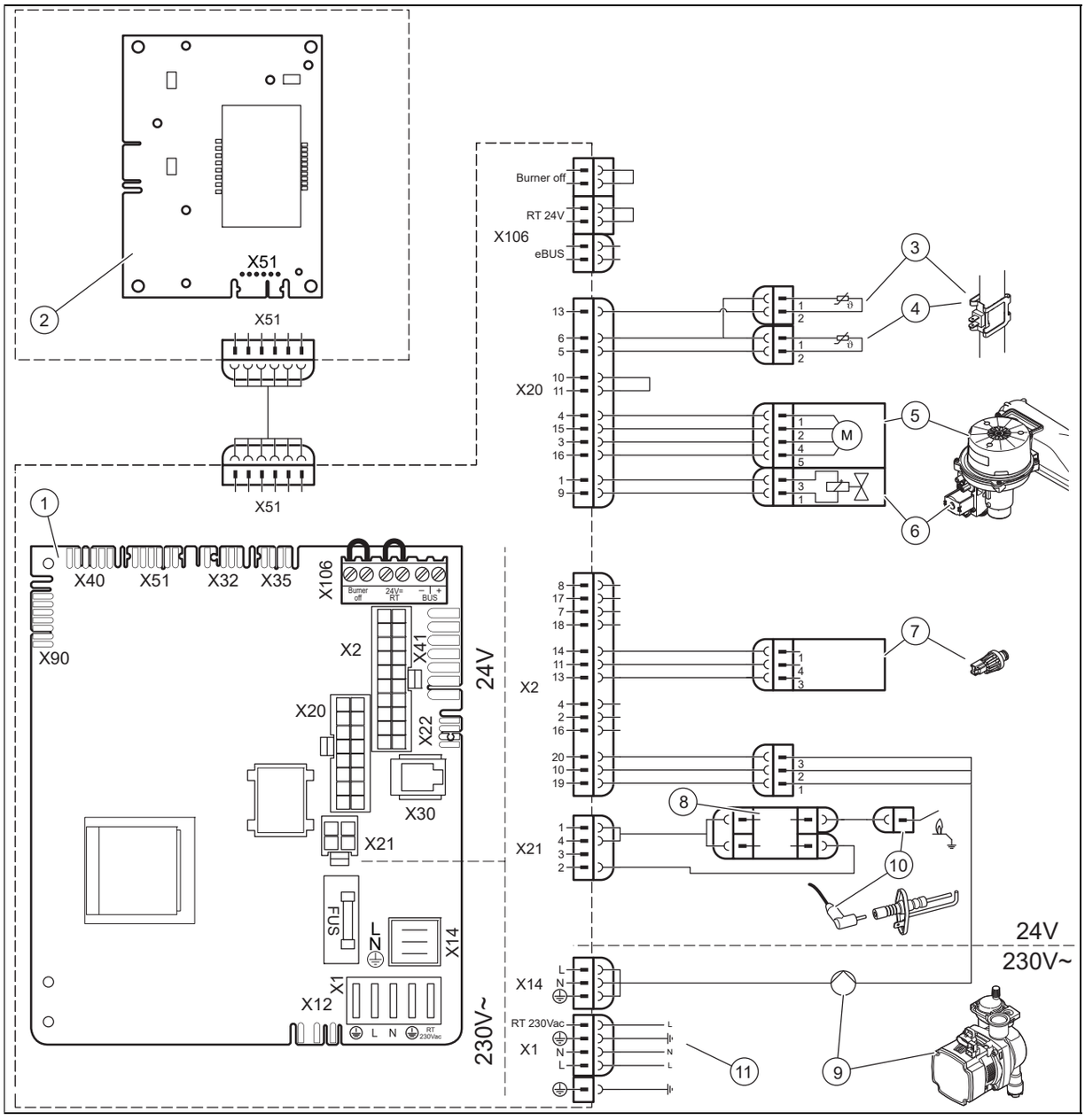

1	Main PCB	7	Pressure sensor
2	Interface PCB	8	External ignition transformer
3	Temperature sensor on the heating flow	9	Heating pump
4	Temperature sensor on the heating return	10	Ionisation and ignition electrode
5	Fan	11	Main power supply and connection for 230 V control
6	Gas valve assembly		

E Wiring diagram: Pure boiler (30 kW)

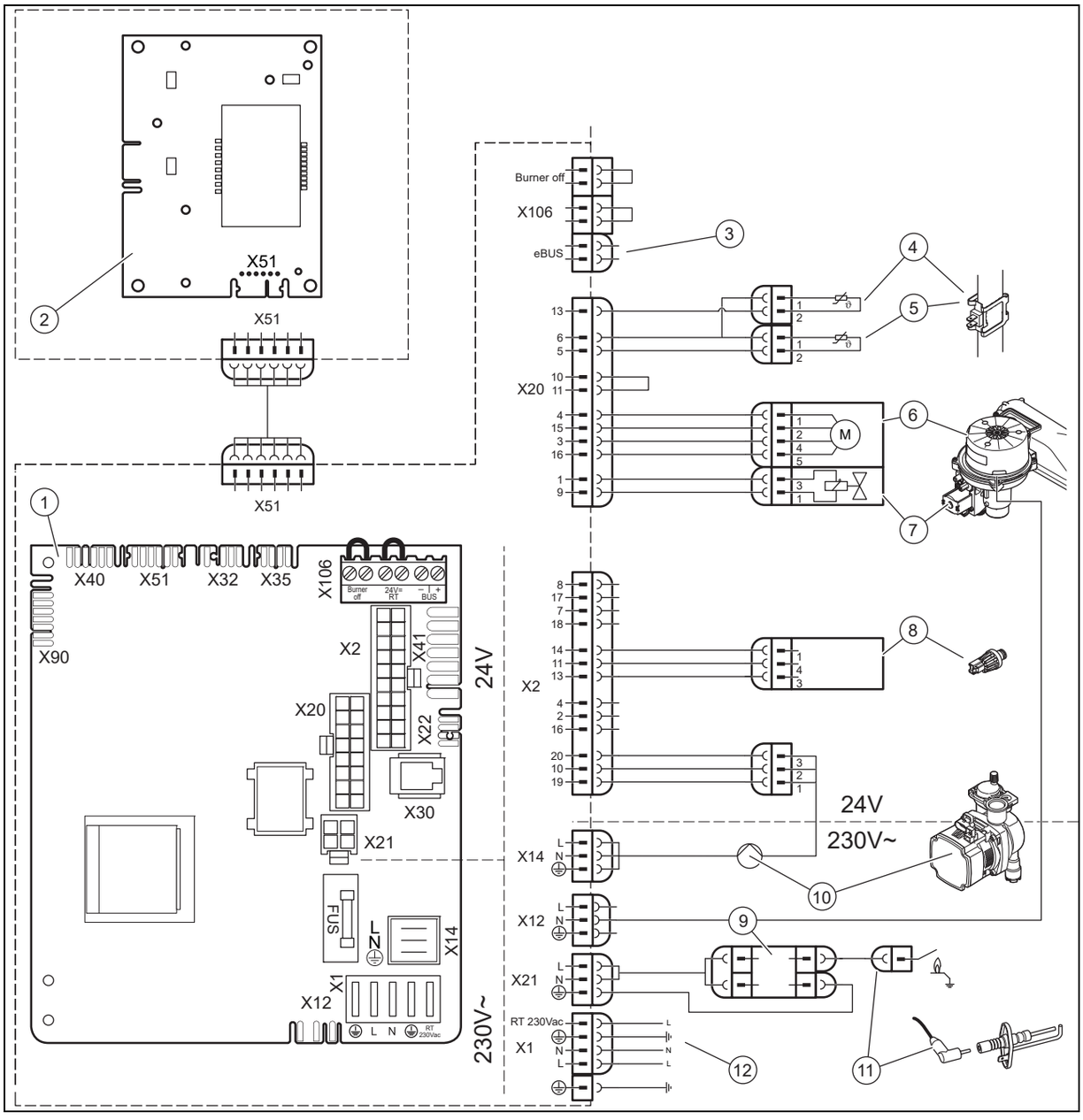

1	Main PCB	7	Gas valve assembly
2	Interface PCB	8	Pressure sensor
3	Control system	9	Ionisation electrode
4	Temperature sensor on the heating flow	10	Heating pump
5	Temperature sensor on the heating return	11	Ignition electrode
6	Fan	12	Main power supply and connection for 230 V control

F Inspection and maintenance work

The table below lists the manufacturer requirements with respect to minimum inspection and maintenance intervals. If national regulations and directives require shorter inspection and maintenance intervals, you should observe these instead of the intervals listed. Each time inspection and maintenance work is carried out, carry out the required preparatory and completion work.

Note

Note: For products that are not part of the annual service agreement, maintenance must be carried out at least once every five years.

#	Maintenance work	Interval	
1	Ask the end user whether any significant problems occur when operating the product	Annually	
2	Use the diagnostics system to check the product's fault history	Annually	
3	Visually inspect whether the air/flue pipe and its opening have been installed correctly in accordance with the set-up instructions	Annually	
4	Check that the unit has been installed correctly and the connections have been secured	Annually	
5	Check all of the connections for tightness	Annually	
6	Check that the condensate pipe is in good condition, that it is leak-tight and that the drain is correct	Annually	
7	Check whether all of the externally routed condensate pipes are dimensioned correctly and have been insulated sufficiently (frost protection)	Annually	
8	Check whether the gas flow rate corresponds with the specifications on the data plate and lies within the tolerances specified in these instructions	Annually	
9	If the gas flow rate lies outside of the tolerances specified in these instructions, eliminate the fault in accordance with the regulations and the current technology	Annually	
10	Check the general condition of the product and, if required, eliminate any faults that are found	Annually	
11	Carry out the combustion analysis: Measure the CO content, CO_2 content and the CO/CO_2 ratio. For products with a rear air/flue connection: The combustion analysis can only be carried out when the unit casing has been removed; it is not necessary to test these products for flue gas recirculation	Annually	
12	Check the product's recirculation at the supply air test point on the air/flue pipe. If required, inspect the entire air/flue system and, if necessary, correct the fault	Annually	
13	Disconnect the product from the electrical installation	Annually	
14	Check and, if required, correct the electrical installation	Annually	
15	Remove the unit casing, check the condition of all of the functional components, in particular for leaks, corrosion, rust, etc. and, if required, repair any damage	Annually	
16	Visual inspection of the heat exchanger and burner seals	Annually	
17	Carefully clean the inside of the product: The air passages to the burner must be clear and clean	Annually	
18	Close the installation's gas stopcock and, if required, service valves	Annually	
19	Check the quality of the heating water: Clarity (clouding), correct inhibitor and pH value	Annually	
20	Checking the admission pressure of the expansion vessel	If required, at least every 5 years	27
21	Removing the gas-air mixture unit	If required, at least every 5 years	25
22	Checking the burner	If required, at least every 5 years	26
23	Cleaning the condensate trap	Annually	26
24	Filling the condensate trap	Annually	17
25	Cleaning the heat exchanger	If required, at least every 5 years	26

#	Maintenance work	Interval	
26	Check and, if required, replace the insulating mat in the burner area	If required, at least every 5 years	
27	Installing the gas-air mixture unit	If required, at least every 5 years	27
28	Reassemble the product	After each time maintenance work is carried out	
29	Open the service valves, carry out the required leak-tightness test	Annually	
30	Fill the product/heating installation to the filling pressure specified for the system	Annually	
31	Connect the product to the electrical installation	Annually	
32	Run the test operation on the product/heating installation including hot water generation (if available) and, if required, purge the product/heating installation	Annually	
33	Record all of the analysis results in the Benchmark service record in these instructions	Annually	

G Position of the opening in the air/flue pipe

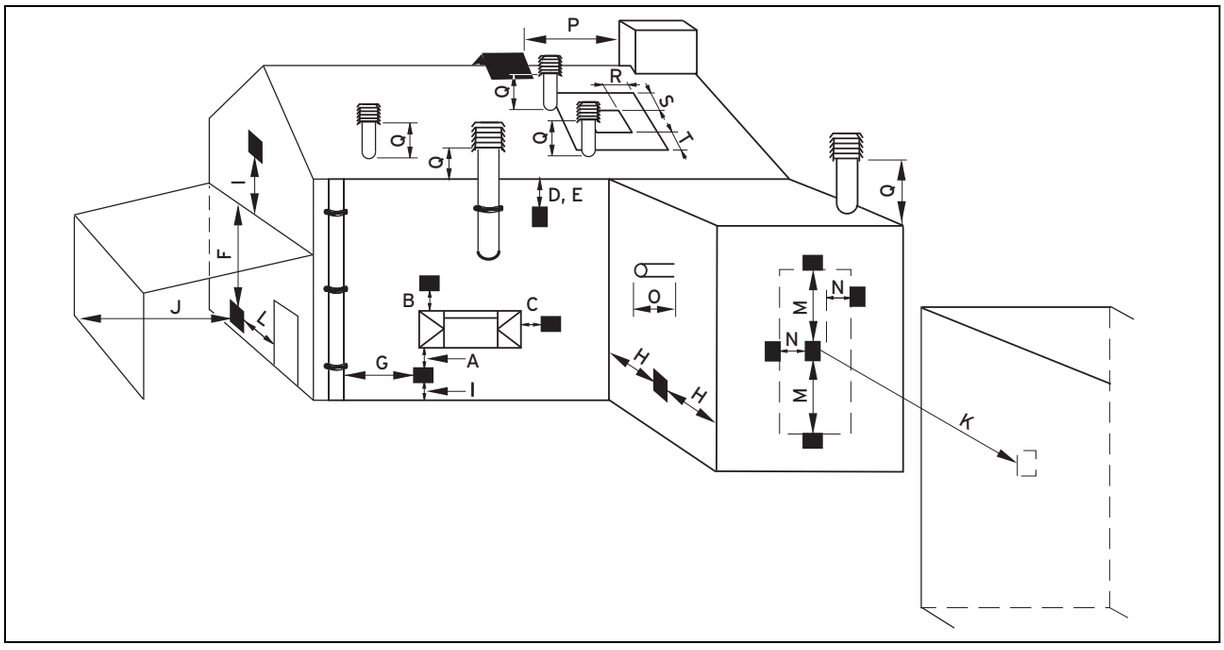

G.1 Positioning of the opening of a fan-supported flue gas pipe

	Installation site	Minimum dimensions
A	Directly below an opening, air bricks, opening windows, etc., that can be opened.	300 mm
B	Above an opening, air bricks, opening windows, etc., that can be opened.	300 mm
C	Horizontally to an opening, air bricks, opening windows, etc., that can be opened.	300 mm
D	Below temperature-sensitive building components, e.g. plastic gutters, down pipes or wastewater pipes	75 mm
E	Below eaves	200 mm
F	Below balconies or car port roofs	200 mm
G	From vertical wastewater pipes or down pipes	150 mm
H	From external or internal corners	200 mm
I	Above floors, roofs or balconies	300 mm
J	From a surface facing a terminal	600 mm
K	From a terminal facing a terminal	1,200 mm
L	From an opening in the car port (e.g. door, window) which leads into the dwelling	1,200 mm

	Installation site	Minimum dimensions
M	Vertical from a terminal on the same wall	1,500 mm
N	Horizontal from a terminal on the same wall	300 mm
O	From the wall on which the terminal has been installed	0 mm
P	From a vertical structure on the roof	300 mm
Q	Above the roof area	300 mm
R	Horizontal from adjacent windows on pitched or flat roofs	600 mm
S	Above adjacent windows on pitched or flat roofs	600 mm
T	Below adjacent windows on pitched or flat roofs	2,000 mm

G.2 Horizontal terminal positioning

BS 5440-1 recommends that fanned flue chimney terminals should be positioned as follows:

a) at least 2 m from an opening in the building directly opposite, and

b) so that the products of combustion are not directed to discharge directly across a boundary if the products are likely to cause a nuisance to a neighbour or discharge over a walkway or patio.

For IE see current issue of IS 813.

For boilers covered within this manual.

1) Dimensions D, E, F and G:

These clearances may be reduced to 25 mm without affecting the performance of the boiler. In order to ensure that the condensate plume does not affect adjacent surfaces the terminal should be extended as shown below.

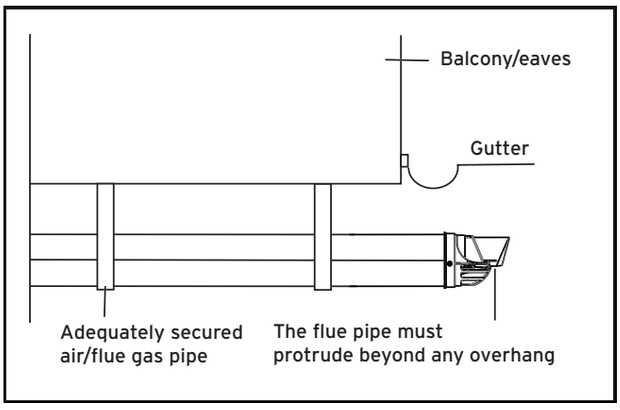

2) Dimension H:

This clearance may be reduced to 25 mm without affecting the performance of the boiler. However, in order to ensure that the condensate plume does not affect adjacent surfaces a clearance of 300 mm is preferred.

For 1 and 2 above you can use a flue gas management kit to enable the termination point to be positioned and directed away from the building fabric.

H Commissioning Checklist

Benchmark Commissioning and Servicing Section

It is a requirement that the boiler is installed and commissioned to the manufacturers instructions and the data fields on the commissioning checklist completed in full.

To instigate the boiler guarantee the boiler needs to be registered with the manufacturer within one month of the installation.

To maintain the boiler guarantee it is essential that the boiler is serviced annually by a Gas Safe registered engineer who has been trained on the boiler installed. The service details should be recorded on the Benchmark Service Interval Record and left with the householder.

benchmark
COLLECTIVE MARK
THE MARK OF QUALITY FOR THE INSTALLATION, COMMISSIONING AND SERVICING OF DOMESTIC HEATING AND HOT WATER SYSTEMS

www.centralheating.co.uk

© Heating and Hotwater Industry Council (HHIC)

GAS BOILER SYSTEM COMMISSIONING CHECKLIST

This Commissioning Checklist is to be completed in full by the competent person who commissioned the boiler as a means of demonstrating compliance with the appropriate Building Regulations and then handed to the customer to keep for future reference.

Failure to install and commission according to the manufacturer's instructions and complete this Benchmark Commissioning Checklist will invalidate the warranty. This does not affect the customer's statutory rights.

Customer name:	Telephone number:
Address:	
Boiler make and model:	
Boiler serial number:	
Commissioned by (PRINT NAME):	Gas Safe register number:
Company name:	Telephone number:
Company address:	
	Commissioning date:
To be completed by the customer on receipt of a Building Regulations Compliance Certificate*	
Building Regulations Notification Number (if applicable):	

CONTROLS (tick the appropriate boxes)				
Time and temperature control to heating	Room thermostat and programmer/timer		Programmable room thermostat	
	Load/weather compensation		Optimum start control	
Time and temperature control to hot water	Cylinder thermostat and programmer/timer		Combination Boiler	
Heating zone valves	Fitted		Not required	
Hot water zone valves	Fitted		Not required	
Thermostatic radiator valves	Fitted		Not required	
Automatic bypass to system	Fitted		Not required	
Boiler interlock			Provided	

ALL SYSTEMS				
The system has been flushed and cleaned in accordance with BS7593 and boiler manufacturer's instructions			Yes	
What system cleaner was used?				
What inhibitor was used?		Quantity		litres
Has a primary water system filter been installed?	Yes		No	

CENTRAL HEATING MODE measure and record:			
Gas rate	m^3/hr	**OR**	ft^3/hr
Burner operating pressure (if applicable)	mbar	**OR** Gas inlet pressure	mbar
Central heating flow temperature			°C
Central heating return temperature			°C

COMBINATION BOILERS ONLY				
Is the installation in a hard water area (above 200ppm)?	Yes		No	
If yes, and if required by the manufacturer, has a water scale reducer been fitted?	Yes		No	
What type of scale reducer has been fitted?				
DOMESTIC HOT WATER MODE Measure and Record:				
Gas rate	m^3/hr	**OR**	ft^3/hr	
Burner operating pressure (at maximum rate)	mbar	**OR** Gas inlet pressure at maximum rate	mbar	
Cold water inlet temperature			°C	
Hot water has been checked at all outlets	Yes		Temperature	°C
Water flow rate			l/min	

CONDENSING BOILERS ONLY		
The condensate drain has been installed in accordance with the manufacturer's instructions and/or BS5546/BS6798	Yes	

ALL INSTALLATIONS							
Record the following:	At max. rate:	CO	ppm	**AND**	CO/CO_2	Ratio	
	At min. rate: (where possible)	CO	ppm	**AND**	CO/CO_2	Ratio	
The heating and hot water system complies with the appropriate Building Regulations						Yes	
The boiler and associated products have been installed and commissioned in accordance with the manufacturer's instructions						Yes	
The operation of the boiler and system controls have been demonstrated to and understood by the customer						Yes	
The manufacturer's literature, including Benchmark Checklist and Service Record, has been explained and left with the customer						Yes	

Commissioning Engineer's Signature
Customer's Signature
(To confirm satisfactory demonstration and receipt of manufacturer's literature)

*All installations in England and Wales must be notified to Local Authority Building Control (LABC) either directly or through a Competent Persons Scheme. A Building Regulations Compliance Certificate will then be issued to the customer.

benchmark COLLECTIVE MARK
THE MARK OF QUALITY FOR THE INSTALLATION, COMMISSIONING AND SERVICING OF DOMESTIC HEATING AND HOT WATER SYSTEMS

© Heating and Hotwater Industry Council (HHIC)

www.centralheating.co.uk

SERVICE RECORD

It is recommended that your heating system is serviced regularly and that the appropriate Service Interval Record is completed.

Service Provider

Before completing the appropriate Service Record below, please ensure you have carried out the service as described in the manufacturer's instructions. Always use the manufacturer's specified spare part when replacing controls.

SERVICE 01					Date:
Engineer name:					
Company name:					
Telephone No:					
Gas safe register No:					
Record:	At max. rate:	CO	ppm	**AND**	CO_2 %
	At min. rate: (Where Possible)	CO	ppm	**AND**	CO_2 %
Comments:					
Signature					

SERVICE 02					Date:
Engineer name:					
Company name:					
Telephone No:					
Gas safe register No:					
Record:	At max. rate:	CO	ppm	**AND**	CO_2 %
	At min. rate: (Where Possible)	CO	ppm	**AND**	CO_2 %
Comments:					
Signature					

SERVICE 03					Date:
Engineer name:					
Company name:					
Telephone No:					
Gas safe register No:					
Record:	At max. rate:	CO	ppm	**AND**	CO_2 %
	At min. rate: (Where Possible)	CO	ppm	**AND**	CO_2 %
Comments:					
Signature					

SERVICE 04					Date:
Engineer name:					
Company name:					
Telephone No:					
Gas safe register No:					
Record:	At max. rate:	CO	ppm	**AND**	CO_2 %
	At min. rate: (Where Possible)	CO	ppm	**AND**	CO_2 %
Comments:					
Signature					

SERVICE 05					Date:
Engineer name:					
Company name:					
Telephone No:					
Gas safe register No:					
Record:	At max. rate:	CO	ppm	**AND**	CO_2 %
	At min. rate: (Where Possible)	CO	ppm	**AND**	CO_2 %
Comments:					
Signature					

SERVICE 06					Date:
Engineer name:					
Company name:					
Telephone No:					
Gas safe register No:					
Record:	At max. rate:	CO	ppm	**AND**	CO_2 %
	At min. rate: (Where Possible)	CO	ppm	**AND**	CO_2 %
Comments:					
Signature					

SERVICE 07					Date:
Engineer name:					
Company name:					
Telephone No:					
Gas safe register No:					
Record:	At max. rate:	CO	ppm	**AND**	CO_2 %
	At min. rate: (Where Possible)	CO	ppm	**AND**	CO_2 %
Comments:					
Signature					

SERVICE 08					Date:
Engineer name:					
Company name:					
Telephone No:					
Gas safe register No:					
Record:	At max. rate:	CO	ppm	**AND**	CO_2 %
	At min. rate: (Where Possible)	CO	ppm	**AND**	CO_2 %
Comments:					
Signature					

SERVICE 09					Date:
Engineer name:					
Company name:					
Telephone No:					
Gas safe register No:					
Record:	At max. rate:	CO	ppm	**AND**	CO_2 %
	At min. rate: (Where Possible)	CO	ppm	**AND**	CO_2 %
Comments:					
Signature					

SERVICE 10					Date:
Engineer name:					
Company name:					
Telephone No:					
Gas safe register No:					
Record:	At max. rate:	CO	ppm	**AND**	CO_2 %
	At min. rate: (Where Possible)	CO	ppm	**AND**	CO_2 %
Comments:					
Signature					

*All installations in England and Wales must be notified to Local Authority Building Control (LABC) either directly or through a Competent Persons Scheme. A Building Regulations Compliance Certificate will then be issued to the customer.

benchmark COLLECTIVE MARK
THE MARK OF QUALITY FOR THE INSTALLATION, COMMISSIONING AND SERVICING OF DOMESTIC HEATING AND HOT WATER SYSTEMS

© Heating and Hotwater Industry Council (HHIC)

www.centralheating.co.uk

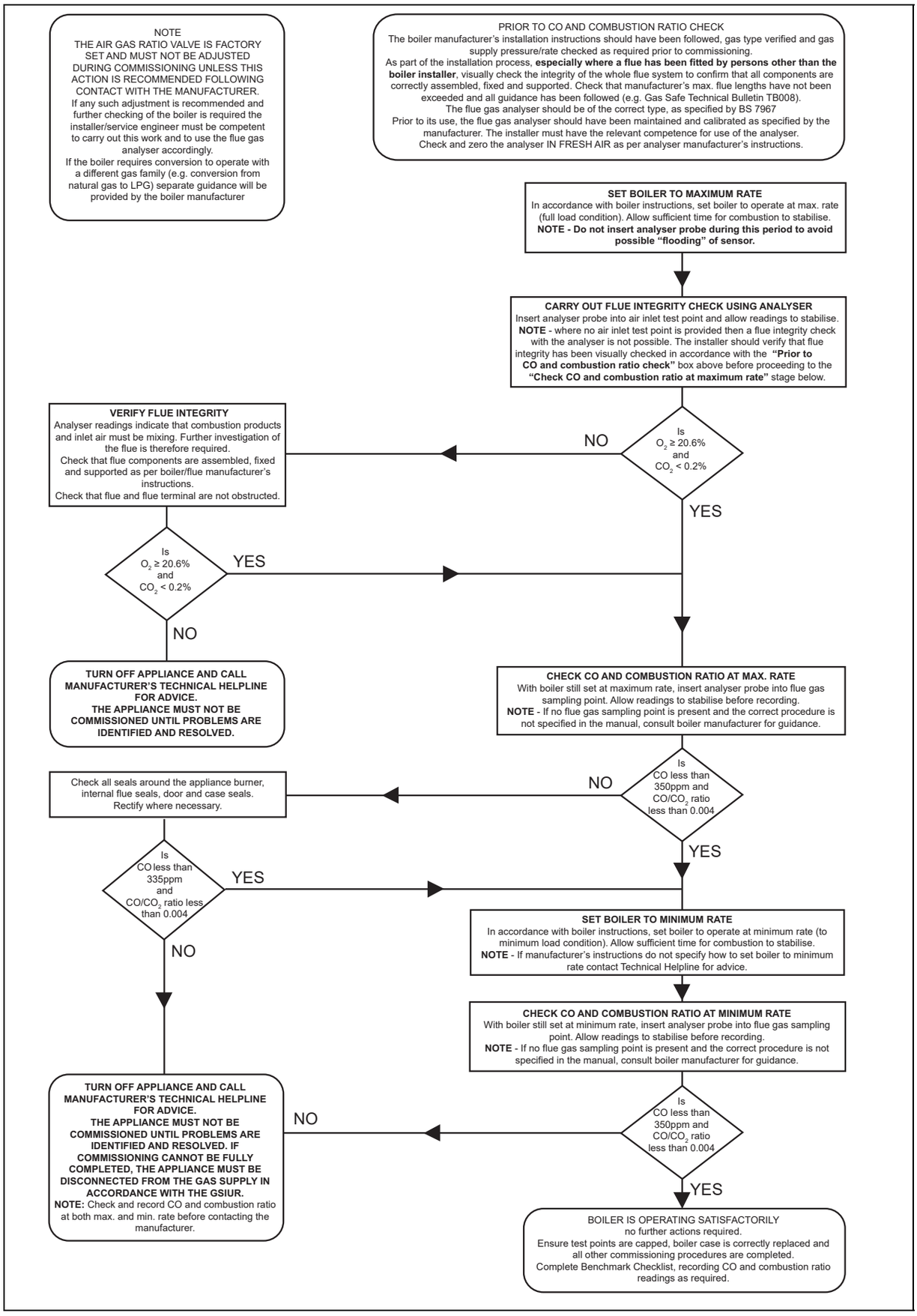
NOTE
THE AIR GAS RATIO VALVE IS FACTORY SET AND MUST NOT BE ADJUSTED DURING COMMISSIONING UNLESS THIS ACTION IS RECOMMENDED FOLLOWING CONTACT WITH THE MANUFACTURER.
If any such adjustment is recommended and further checking of the boiler is required the installer/service engineer must be competent to carry out this work and to use the flue gas analyser accordingly.
If the boiler requires conversion to operate with a different gas family (e.g. conversion from natural gas to LPG) separate guidance will be provided by the boiler manufacturer
PRIOR TO CO AND COMBUSTION RATIO CHECK
The boiler manufacturer's installation instructions should have been followed, gas type verified and gas supply pressure/rate checked as required prior to commissioning.
As part of the installation process, especially where a flue has been fitted by persons other than the boiler installer, visually check the integrity of the whole flue system to confirm that all components are correctly assembled, fixed and supported. Check that manufacturer's max. flue lengths have not been exceeded and all guidance has been followed (e.g. Gas Safe Technical Bulletin TB008).
The flue gas analyser should be of the correct type, as specified by BS 7967
Prior to its use, the flue gas analyser should have been maintained and calibrated as specified by the manufacturer. The installer must have the relevant competence for use of the analyser.
Check and zero the analyser IN FRESH AIR as per analyser manufacturer's instructions.
SET BOILER TO MAXIMUM RATE
In accordance with boiler instructions, set boiler to operate at max. rate (full load condition). Allow sufficient time for combustion to stabilise.
NOTE - Do not insert analyser probe during this period to avoid possible "flooding" of sensor.
CARRY OUT FLUE INTEGRITY CHECK USING ANALYSER
Insert analyser probe into air inlet test point and allow readings to stabilise.
NOTE - where no air inlet test point is provided then a flue integrity check with the analyser is not possible. The installer should verify that flue integrity has been visually checked in accordance with the "Prior to CO and combustion ratio check" box above before proceeding to the "Check CO and combustion ratio at maximum rate" stage below.
Is $O_2 \geq 20.6\%$ and $CO_2 < 0.2\%$
NO
YES
VERIFY FLUE INTEGRITY
Analyser readings indicate that combustion products and inlet air must be mixing. Further investigation of the flue is therefore required.
Check that flue components are assembled, fixed and supported as per boiler/flue manufacturer's instructions.
Check that flue and flue terminal are not obstructed.
Is $O_2 \geq 20.6\%$ and $CO_2 < 0.2\%$
YES
NO
TURN OFF APPLIANCE AND CALL MANUFACTURER'S TECHNICAL HELPLINE FOR ADVICE.
THE APPLIANCE MUST NOT BE COMMISSIONED UNTIL PROBLEMS ARE IDENTIFIED AND RESOLVED.
CHECK CO AND COMBUSTION RATIO AT MAX. RATE
With boiler still set at maximum rate, insert analyser probe into flue gas sampling point. Allow readings to stabilise before recording.
NOTE - If no flue gas sampling point is present and the correct procedure is not specified in the manual, consult boiler manufacturer for guidance.
Is CO less than 350ppm and CO/CO_2 ratio less than 0.004
NO
YES
Check all seals around the appliance burner, internal flue seals, door and case seals. Rectify where necessary.
Is CO less than 335ppm and CO/CO_2 ratio less than 0.004
YES
NO
SET BOILER TO MINIMUM RATE
In accordance with boiler instructions, set boiler to operate at minimum rate (to minimum load condition). Allow sufficient time for combustion to stabilise.
NOTE - If manufacturer's instructions do not specify how to set boiler to minimum rate contact Technical Helpline for advice.
CHECK CO AND COMBUSTION RATIO AT MINIMUM RATE
With boiler still set at minimum rate, insert analyser probe into flue gas sampling point. Allow readings to stabilise before recording.
NOTE - If no flue gas sampling point is present and the correct procedure is not specified in the manual, consult boiler manufacturer for guidance.
TURN OFF APPLIANCE AND CALL MANUFACTURER'S TECHNICAL HELPLINE FOR ADVICE.
THE APPLIANCE MUST NOT BE COMMISSIONED UNTIL PROBLEMS ARE IDENTIFIED AND RESOLVED. IF COMMISSIONING CANNOT BE FULLY COMPLETED, THE APPLIANCE MUST BE DISCONNECTED FROM THE GAS SUPPLY IN ACCORDANCE WITH THE GSIUR.
NOTE: Check and record CO and combustion ratio at both max. and min. rate before contacting the manufacturer.
NO
Is CO less than 350ppm and CO/CO_2 ratio less than 0.004
YES
BOILER IS OPERATING SATISFACTORILY
no further actions required.
Ensure test points are capped, boiler case is correctly replaced and all other commissioning procedures are completed.
Complete Benchmark Checklist, recording CO and combustion ratio readings as required.

I Technical data

Technical data – Heating

	VU 156/6-3 (H-GB)	VU 186/6-3 (H-GB)	VU 306/6-3 (H-GB)
Max. flow temperature adjustment range (default setting: 75 °C)	10 … 80 °C	10 … 80 °C	10 … 80 °C
Maximum permissible pressure	0.3 MPa (3.0 bar)	0.3 MPa (3.0 bar)	0.3 MPa (3.0 bar)
Nominal water flow (ΔT = 20 K)	655 l/h	788 l/h	1,102 l/h
Nominal water flow (ΔT = 30 K)	436 l/h	525 l/h	876 l/h
Approximate value for the condensate volume (pH value between 3.5 and 4.0) at 50/30 °C	1.53 l/h	1.84 l/h	3.06 l/h
ΔP heating at nominal flow (ΔT = 20 K)	0.025 MPa (0.250 bar)	0.025 MPa (0.250 bar)	0.025 MPa (0.250 bar)

Technical data – G20 power/loading G20

	VU 156/6-3 (H-GB)	VU 186/6-3 (H-GB)	VU 306/6-3 (H-GB)
Maximum heat output	15 kW	18 kW	30 kW
Effective output range (P) at 40/30 °C	4.8 … 16.2 kW	5.3 … 19.5 kW	7.6 … 32.4 kW
Effective output range (P) at 50/30 °C	4.7 … 15.9 kW	5.2 … 19.1 kW	7.5 … 31.8 kW
Effective output range (P) at 80/60 °C	4.5 … 15.2 kW	5.0 … 18.3 kW	7.2 … 30.5 kW
Domestic hot water heat output (P)	4.4 … 18.0 kW	4.9 … 25.2 kW	7.1 … 35.0 kW
Maximum heat input – heating (Q max.)	15.3 kW	18.4 kW	30.6 kW
Minimum heat input – heating (Q min.)	4.5 kW	5.0 kW	7.2 kW
Maximum heat input – hot water (Q max.)	18.4 kW	25.7 kW	35.7 kW
Minimum heat input – hot water (Q min.)	4.5 kW	5.0 kW	7.2 kW

Technical data – General

	VU 156/6-3 (H-GB)	VU 186/6-3 (H-GB)	VU 306/6-3 (H-GB)
Diameter of the gas pipe	1/2 inch	1/2 inch	1/2 inch
Diameter of the heating connections	3/4 inch	3/4 inch	3/4 inch
Expansion relief valve connector (min.)	15 mm	15 mm	15 mm
Condensate drain pipework (min.)	21.5 mm	21.5 mm	21.5 mm
G20 gas supply pressure	2.0 kPa (20.0 mbar)	2.0 kPa (20.0 mbar)	2.0 kPa (20.0 mbar)
Gas flow at P max. – hot water (G20)	1.9 m³/h	2.7 m³/h	3.8 m³/h
Gas flow at P max. – heating mode (G20)	1.6 m³/h	1.9 m³/h	3.2 m³/h
Gas flow at P min. (G20)	0.480 m³/h	0.533 m³/h	0.762 m³/h
CE number (PIN)	CE-0063CP3646	CE-0063CP3646	CE-0063CP3646
Flue gas mass rate in heating mode at P min.	2.08 g/s	2.31 g/s	3.30 g/s
Flue gas mass rate in heating mode at P max.	6.9 g/s	8.3 g/s	13.8 g/s
Flue gas mass rate in hot water handling mode at P max.	8.3 g/s	11.6 g/s	16.1 g/s
Flue gas temperature (80 °C/60 °C) at P max.	55 °C	60 °C	82 °C

	VU 156/6-3 (H-GB)	VU 186/6-3 (H-GB)	VU 306/6-3 (H-GB)
Flue gas temperature (80 °C/60 °C) at P min.	55 °C	55 °C	56 °C
Flue gas temperature (50 °C/30 °C) at P max.	48 °C	51 °C	56 °C
Flue gas temperature (50 °C/30 °C) at P min.	32 °C	34 °C	37 °C
Flue gas temperature in hot water handling mode	71 °C	69 °C	75 °C
Flue gas temperature when over-heating	105 °C	105 °C	104 °C
Released system types	C13, C33, C43, C53	C13, C33, C43, C53	C13, C33, C43, C53
Nominal efficiency at 80/60 °C	98.9 %	98.8 %	99.2 %
Nominal efficiency at 50/30 °C	104.0 %	104.0 %	104.0 %
Nominal efficiency at 40/30 °C	106.0 %	106.0 %	106.0 %
Nominal efficiency in partial load operation (30%) at 40/30 °C	109.9 %	109.8 %	109.8 %
NOx class	5	5	5
Product dimensions, width	390 mm	390 mm	390 mm
Product dimensions, depth	295 mm	295 mm	295 mm
Product dimensions, height	702 mm	702 mm	702 mm
Net weight	31 kg	31 kg	32 kg
Weight when filled with water	35 kg	35 kg	36 kg

Technical data – Electrics

	VU 156/6-3 (H-GB)	VU 186/6-3 (H-GB)	VU 306/6-3 (H-GB)
Electric connection	230 V / 50 Hz	230 V / 50 Hz	230 V / 50 Hz
Built-in fuse (slow-blow)	T2/2A, 250V	T2/2A, 250V	T2/2A, 250V
Max. electrical power consump-tion	81 W	87 W	104 W
Standby electrical power con-sumption	2 W	2 W	2 W
Level of protection	IPX4D	IPX4D	IPX4D

Index

A
Air/flue pipe, installed 4
B
Burner anti-cycling time 19
Burner anti-cycling time, resetting 19
Burner anti-cycling time, setting 19
Bypass valve 21
C
Calling up, fault memory 22
CE label 7
Check programmes 14
Checking the burner 26
Checking the pre-charge pressure of the expansion vessel 27
Cleaning the condensate trap 26
Cleaning the heat exchanger 26
Clearance 8
Clearing, fault memory 22
CO_2 content
Checking 18, 24
Competent person 3
Completing inspection work 27
Completing maintenance work 27
Condensate discharge pipe 11
Condensate trap
Filling 17
Control 13
Corrosion 4
D
Data plate 6
Decommissioning 27
Decommissioning the product 27
Display and setting options 14
Documents 6
Draining the product 27
E
Electricity 4
Expansion relief valve 24
F
Fault codes 21
Fault memory, calling up 22
Fault memory, deleting 22
Fault messages 21
Flue gas route 4
Front casing, closed 4
Frost 5
G
Gas family check 15
Gas flow rate 17
H
Handing over to the end user 21
High-efficiency pump 20
High-efficiency pump output 20
I
If you smell flue gas 4
If you smell gas 3
Inspection work 24
Installation site 4
Installer level 14
Installer level, calling up 14
Intended use 3
L
Leak-tightness 19, 24, 27
M
Mains connection 13
Maintenance work 24
Minimum clearance 8
O
Operating concept 14
P
Power supply 13
Preparing the repair work 22
Preparing, repair work 22
Pressure sensor 24
Pump head 23
Q
Qualification 3
R
Regulations 5
Removing the air intake pipe 25
Removing the burner 25
Removing the flue gas pipe 25
Removing the front casing 9
Removing the gas-air mixture unit 25
Removing the ignition transformer 25
Removing the side section 9
Replacing the burner 22
Replacing the expansion vessel 23
Replacing the heat exchanger 22
Replacing the main PCB 23
Replacing, expansion vessel 23
S
Safety device 4
Schematic drawing 4
Spare parts 21
Status codes 14
Switching on the product 16
T
Tool 5
Transport 4
Transporting 7
Treating the heating water 15
U
Unloading the box 7
Unpacking the product 7
User interface, replacing the PCB 24
V
Voltage 4
W
Wall-mounting the product 8
Weight 8

0020277252_01

0020277252_01 ▮ 29.07.2019

Supplier
Vaillant Ltd.
Nottingham Road ▮ Belper ▮ Derbyshire ▮ DE56 1JT
Telephone 0330 100 3461
info@vaillant.co.uk ▮ www.vaillant.co.uk

© These instructions, or parts thereof, are protected by copyright and may be reproduced or distributed only with the manufacturer's written consent.
We reserve the right to make technical changes.