spares & parts online
IBASIS.co.uk©

Vokèra
heating for life

AquaNova

Water heater

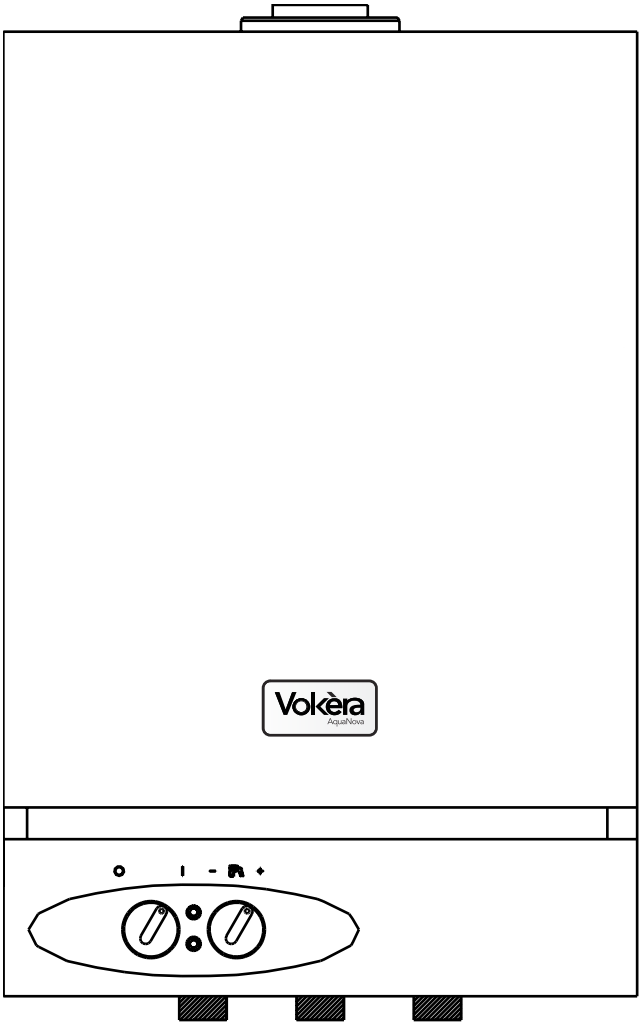

Installation & Servicing Instructions

CE

THESE INSTRUCTIONS TO BE RETAINED BY USER

benchmark
COLLECTIVE MARK
THE MARK OF QUALITY FOR THE INSTALLATION, COMMISSIONING AND SERVICING OF DOMESTIC HEATING AND HOT WATER SYSTEMS

Vokèra is a licensed member of the Benchmark scheme which aims to improve the standards of installation and commissioning of domestic hot water systems in the UK.

Contents

Design principles & operating sequence		Page
1.1	Principle components	2
1.2	Mode of operation	2
1.3	Safety devices	2

Technical data		Page
2.1	Performance	3
2.2	Gas pressure	3
2.3	Dimensions	3
2.4	Clearances	3
2.5	Connections	3
2.6	Electrical	3
2.7	Flue details	3

General requirements		Page
3.1	Related documents	4
3.2	Location of appliance	4
3.3	Gas supply	4
3.4	Flue system	4
3.5	Air supply	4
3.6	Water pipe work	4
3.7	Electrical supply	5
3.8	Timber framed buildings	5

Installation		Page
4.1	Delivery	5
4.2	Contents	5
4.3	Unpacking	5
4.4	Preparation for mounting the appliance	5
4.5	Fitting the flue	6
4.6	Connecting the gas & water	10
4.7	Electrical connections	10

Commissioning		Page
5.1	Gas supply installation	11
5.2	Water pipe work	11
5.3	Pre-operation checks	11
5.4	Initial lighting	11
5.5	Checking the burner pressure	11
5.6	Setting the outlet temperature	11
5.7	Final checks	11
5.8	Instructing the user	11

Servicing		Page
6.1	General	12
6.2	Routine annual servicing	12
6.3	Replacement of components	12
6.4	Component removal procedure	12
6.5	NTC thermistors removal	12
6.6	High limit thermostat removal	12
6.7	Flow switch removal	12
6.8	Gas valve removal	13
6.9	Burner, injectors and spark/sense electrode removal	13
6.10	Flue fan removal	13
6.11	Heat exchanger removal	14
6.12	Air pressure switch removal	14

Checks, adjustments, and fault finding		Page
7.1	Checking appliance operation	14
7.2	Appliance mode of operation	14
7.3	Checking/adjusting burner pressure	14
7.4	External faults	15
7.5	Electrical checks	15
7.6	Fault finding	15
7.7	Fault codes	16

Wiring diagrams		Page
8.1	External wiring	21

Exploded diagrams		Page
9.1	Table 1	23
9.2	Table 2	24

L.P.G. instructions		Page
10.1	Technical data	25
10.2	Related documents	25
10.3	Gas supply	25
10.4	Gas supply installation	25
10.5	Checking/Adjusting the burner pressure	25

INTRODUCTION

The Vokera AquaNova is an instantaneous water heater, which - by design - incorporates electronic ignition, NTC temperature control, continuous gas modulation, and status/fault indicators.

It is produced as a room sealed, category II2H3+ appliance, suitable for wall mounting applications only. It is provided with a fan powered flue outlet with an annular co-axial combustion air intake that can be rotated – horizontally – through 360 degrees for various horizontal or vertical applications.

The AquaNova can also be used with the Vokera twin flue system.

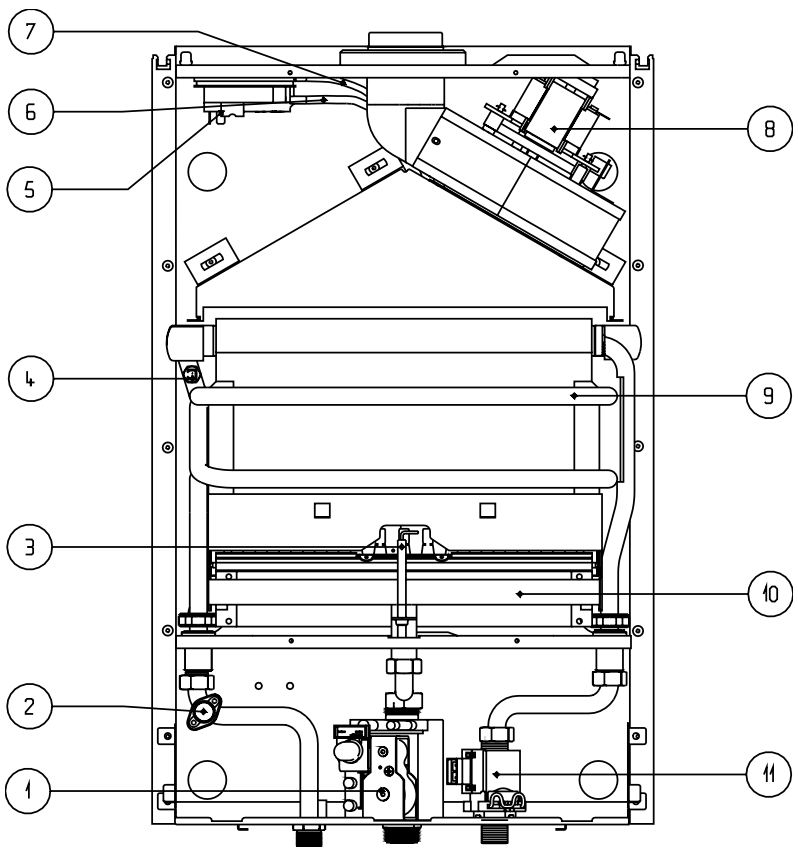

Fig. 1

General layout

1 Gas valve
2 High limit thermostat
3 Electrode
4 NTC sensor
5 Pressure differential switch
6 Silicone pressure tube (+)
7 Silicone pressure tube (-)
8 Fan assembly
9 Heat exchanger
10 Main burner
11 Flow switch

1.1 PRINCIPLE COMPONENTS

- A fully integrated electronic control board featuring electronic temperature control, self-diagnostic fault indicator, continuous gas modulation.
- Electronic ignition with flame supervision.
- Fan.
- Differential air pressure switch.
- Two-stage gas valve.

1.2 MODE OF OPERATION

When there is a request for hot water via a hot water outlet or tap, the water flow switch senses water movement thereby energising the fan, the fan proves the differential air pressure switch which in-turn allows an ignition sequence to begin.

Ignition is sensed by the electronic circuitry to ensure flame stability at the burner. Once successful ignition has been achieved, the electronic circuitry increases the gas rate to maximum or modulates to suit the set requirement.

When the appliance reaches the desired temperature the burner will modulate to maintain the desired temperature. Should the temperature continue to increase, the burner will shut off when the maximum operating temperature is attained.

When the request for hot water has been satisfied the appliance fan may continue to operate to dissipate any residual heat within the appliance.

1.3 SAFETY DEVICES

When the appliance is in use, safe operation is ensured by:

- a high limit thermostat that over-rides the temperature control circuit to prevent or interrupt the operation of the burner;
- a differential air pressure switch that checks the operation of the fan and flue thereby allowing safe operation of the burner;
- a flame supervision device that will shut off the gas supply to the burner if there is no flame sensed within 7 seconds.

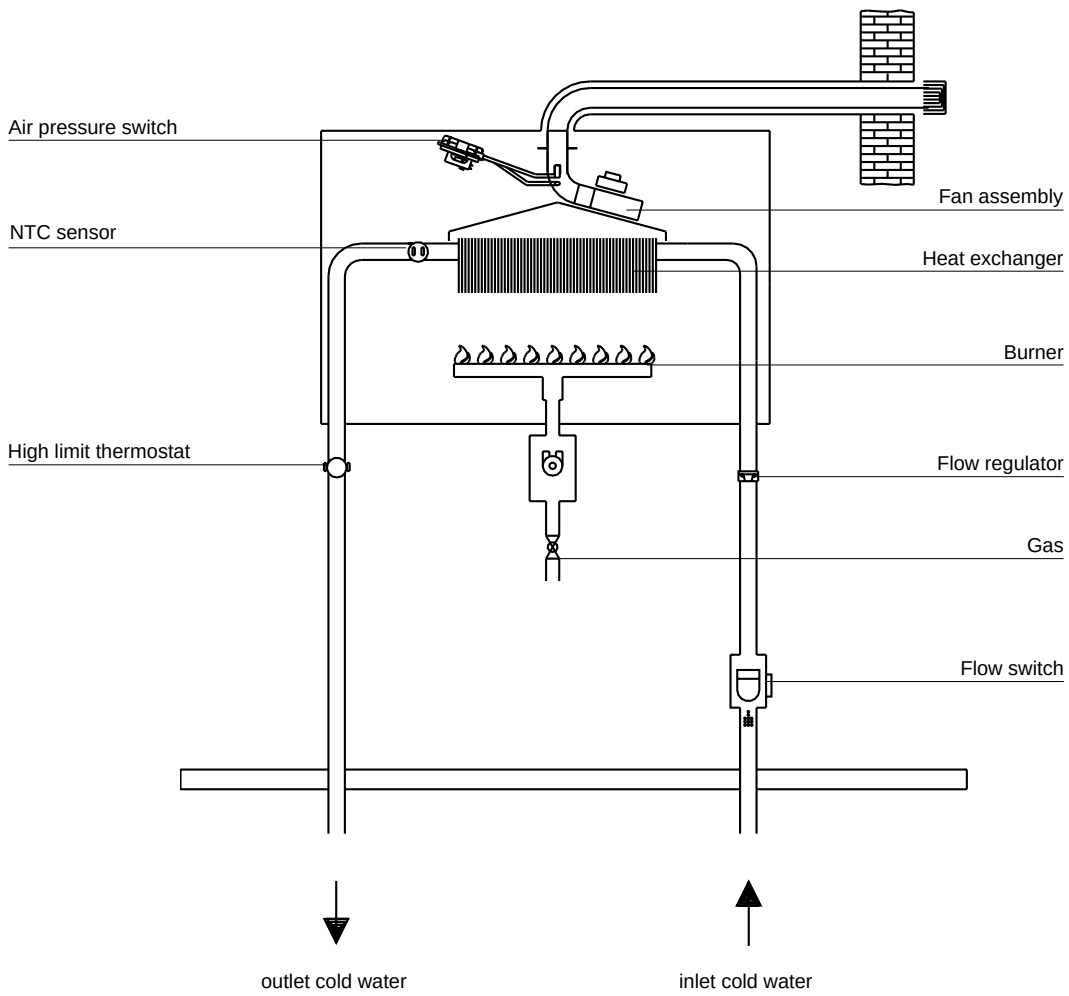

Fig. 2

SECTION 2 TECHNICAL DATA

2.1 Performance	
Heat input	32,0 kW
Heat output (max)	28,8 kW
Heat output (min)	10,0 kW
Minimum working pressure	0,15 kW
Maximum working pressure	10,0 bar
Minimum flow rate	2 litres per minute
Hot water - 35°C temperature rise	11,8 litres per minute
2.2 Gas pressure	
Inlet pressure (G20)	20,0 mbar
Maximum burner pressure	12,0 mbar
Minimum burner pressure	1,5 mbar
Gas rate	3,5 m^3/h
Injector size	15 x 1,30mm
2.3 Dimensions	
Height	640 mm
Width	400 mm
Depth	246 mm
Weight	20 kg
2.4 Clearances	
Top	150 mm from casing or 25 mm above flue elbow (whichever is applicable)
Bottom	150 mm
Sides	50 mm
Front	600 mm
2.5 Connections	
Cold water inlet	15 mm (compression)
Hot water outlet	15 mm (compression)
Gas	15 mm copper
2.6 Electrical	
Voltage	230V/~ 50hz
Power consumption	85 W
Internal fuse	2 AF
External fuse	3 A
2.7 Flue details	
Maximum horizontal flue length (concentric)	2,4 metres
Minimum horizontal flue length (concentric)	0,4 metres
Maximum vertical flue length (concentric)	3,6 metres
Minimum vertical flue length (concentric)	1,0 metres
Maximum twin flue length (horizontal or vertical)	5m/5m + terminal

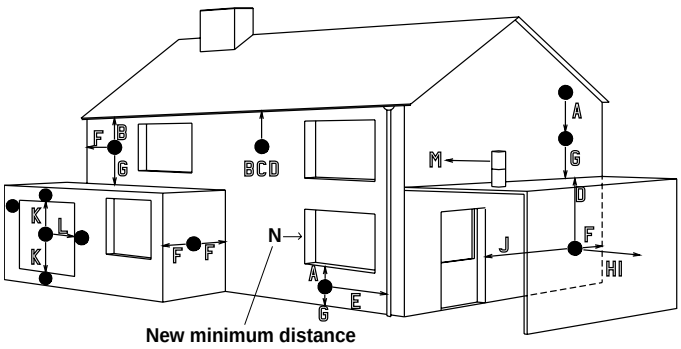

Fig. 3

Terminal position for fan assisted boiler

(minimum distance)			mm
A	-	Directly above or below an open window or other opening (e.g. air brick)	300
B	-	Below gutters, soil pipes or drain pipes	25
C	-	Below eaves	25
D	-	Below balconies or car port roof	25
E	-	From vertical drain pipes and soil pipes	75
F	-	From internal or external corners	25
G	-	Above ground or below balcony level	300
H	-	From a surface facing a terminal	600
I	-	From a terminal facing a terminal	1200
J	-	From an opening in the car port (e.g. door window) into dwelling.	1200
K	-	Vertically from a terminal on the same wall	1500
L	-	Horizontally from a terminal on the same wall	300
M	-	Horizontally from a vertical terminal to a wall	300
N	**-**	**Horizontally from an opening, airbrick, openable window, etc.**	**300**

NOTE: The flue must be terminated in a place not likely to cause a nuisance.

BS 5440	PART 1	FLUES
BS 5440	PART 2	FLUES AND VENTILATION
BS 5546		INSTALLATION OF HOT WATER SUPPLIES FOR DOMESTIC PURPOSES
BS 6891		LOW PRESSURE INSTALLATION PIPES
BS 6700		DESIGN, INSTALLATION, TESTING AND MAINTAINENCE OF SERVICES SUPPLYING WATER FOR DOMESTIC USE

This appliance must be installed by a competent person in accordance with the Gas Safety (Installation & Use) Regulations.

3.1 RELATED DOCUMENTS

The installation of this water heater must be in accordance with the relevant requirements of the Gas Safety (Installation & Use) Regulations, the Water supply (water fittings) Regulations, the Water Byelaws Scotland, the Building Standards (Scotland) Regulation and Building Standards (Northern Ireland) Regulations.

It should be in accordance also with any relevant requirements of the local authority and the relevant recommendations of the following British Standard Codes of Practice.

3.2 LOCATION OF APPLIANCE

The appliance may be installed in any room or internal space, although particular attention is drawn to the requirements of the current I.E.E. wiring regulations, and in Scotland, the electrical provisions of the Building Regulations, with respect to the installation of the appliance in a room or internal space containing a bath or shower.

When an appliance is installed in a room or internal space containing a bath or shower, the appliance or any control pertaining to it must not be within reach of a person using the bath or shower.

The location chosen for the appliance must permit the provision of a safe and satisfactory flue and termination. The location must also permit an adequate air supply for combustion purposes and an adequate space for servicing and air circulation around the appliance. Where the installation of the appliance will be in an unusual location special procedures may be necessary, BS 6798 gives detailed guidance on this aspect.

A compartment used to enclose the appliance must be designed and constructed specifically for this purpose. An existing compartment/cupboard may be utilised provided that it is modified to suit.

Details of essential features of compartment/cupboard design, including airing cupboard installations, are given in BS 6798. This appliance is not suitable for external installation.

3.3 GAS SUPPLY

The gas meter – as supplied by the gas supplier – must be checked to ensure that it is of adequate size to deal with the maximum rated input of all the appliances that it serves. Installation pipes must be fitted in accordance with BS 6891.

Pipe-work from the meter to the appliance must be of adequate size. Pipes of a smaller size than the appliance gas inlet connection must not be used. The installation must be tested for soundness in accordance with BS 6891.

If the gas supply serves more than one appliance, it must be ensured that an adequate supply is maintained to each appliance when they are in use at the same time.

3.4 FLUE SYSTEM

The terminal should be located where the dispersal of combustion products is not impeded and with due regard for the damage and discoloration that may occur to building products located nearby. The terminal must not be located in a place where it is likely to cause a nuisance (see fig. 3).

In cold and/or humid weather, water vapour may condense on leaving the terminal; the effect of such pluming must be considered.

If installed less than 2m above a pavement or platform to which people have access (including balconies or flat roofs) the terminal must be protected by a guard of durable material. The guard must be fitted centrally over the terminal. Refer to BS 5440 Part 1, when the terminal is 0,5 metres (or less) below plastic guttering or 1 metre (or less) below painted eaves.

3.5 AIR SUPPLY

The following notes are intended for general guidance only.

This appliance is a room sealed, fan-flued water heater, consequently it does not require a permanent air vent for combustion air supply.

When installed in a cupboard or compartment, ventilation for cooling purposes is also not required.

3.6 WATER PIPE WORK

Detailed recommendations are given in BS 5449 Part 1 and BS 6798. The following notes are for general guidance only.

3.6.1 PIPEWORK

It is recommended that copper tubing to BS 2871 Part 1 is used in conjunction with soldered capillary joints.

Where possible pipes should have a gradient to ensure air is carried naturally to an outlet and that water flows naturally to drain cocks.

Pipes should be insulated to avoid heat loss and in particular to avoid the possibility of freezing. Particular attention should be paid to pipes passing through ventilated areas such as under floors, loft space, and void areas.

3.6.2 DRAIN COCKS

These must be located in accessible positions to facilitate draining of the appliance and all water pipes connected to the appliance. The drain cocks must be manufactured in accordance with BS 2879.

3.7 ELECTRICAL SUPPLY

The appliance is supplied for operation on 230V @ 50Hz electrical supply; it must be protected with a 3-amp fuse. The method of connection to the mains electricity supply must allow for complete isolation from the supply. The preferred method is by using a double-pole switch with a contact separation of at least 3mm. The switch must only supply the appliance. Alternatively an un-switched shuttered socket with a fused 3-pin plug both complying with BS 1363 is acceptable.

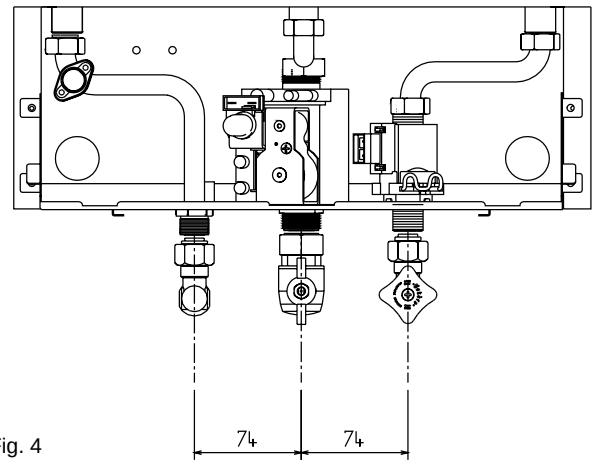

Fig. 4

3.8 TIMBER FRAMED BUILDINGS

If the appliance is to be fitted in a timber framed building, it should be fitted in accordance with the Institute of Gas Engineers publication (IGE/UP/7) “Guide for Gas Installations in Timber Frame Buildings”.

SECTION 4 INSTALLATION

4.1 DELIVERY

The appliance is delivered in a heavy-duty cardboard carton. Lay the carton on the floor with the writing the correct way up.

4.2 CONTENTS

Contained within the carton is:

- the appliance;
- the wall mounting bracket;
- template;
- an accessories pack containing the appliance service valves and washers;
- the instruction pack containing the installation & servicing instructions, user instructions and a 3-amp fuse.

4.3 UNPACKING

At the top of the carton pull both sides open – do not use a knife – unfold the rest of the carton from around the appliance, carefully remove all protective packaging from the appliance, and lay the accessories etc. to one side.

4.4 PREPARATION FOR MOUNTING THE APPLIANCE

The appliance should be mounted on a smooth, vertical, surface, which must be capable of supporting the full weight of the appliance. Care should be exercised when determining the position of the appliance with respect to hidden obstructions such as pipes, cables, etc.

When the position of the appliance has been decided – using the template supplied – carefully mark the position of the wall-mounting bracket (see fig. 5) and flue-hole (if applicable).

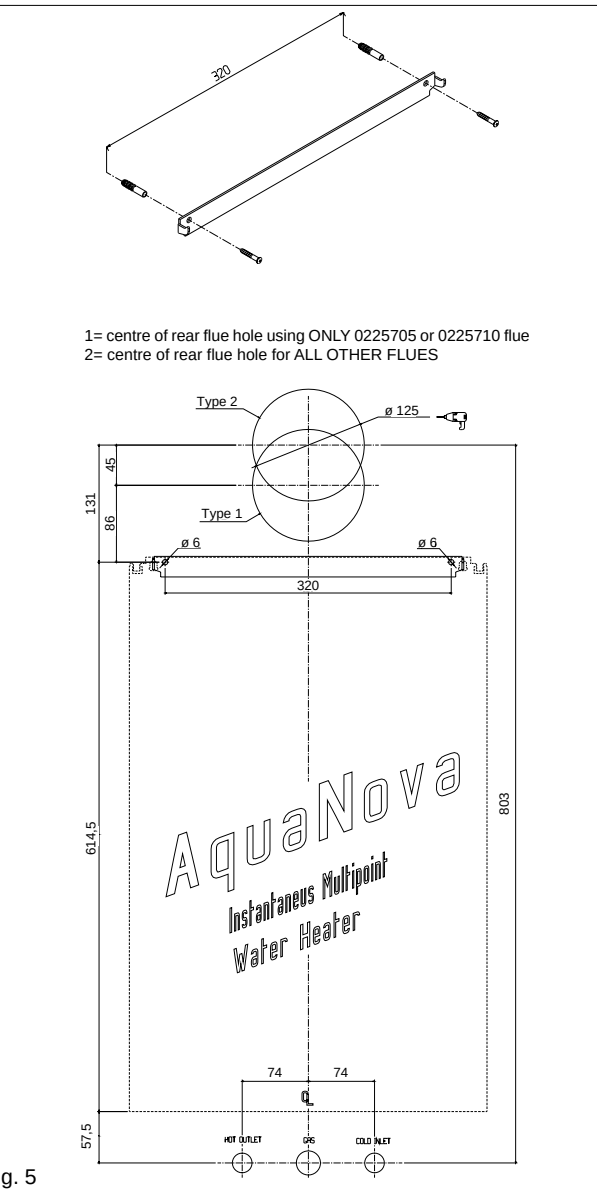

Fig. 5

4.4.1 IMPORTANT

There are two holes on the template.
The lower hole should be used with the telescopic flue kit (part n° 0225705 & 0225710).
The upper hole is for use with all other horizontal flue kits.

4.4.2 MAXIMUM FLUE LENGTHS

Flue system	AquaNova
Concentric Horizontal	2,4m
Concentric Vertical	3,6m
Twin flue	5m/5m + terminal

4.5 FITTING THE FLUE

The top flue outlet permits both horizontal and vertical flue applications to be considered, alternatively, the Vokera twin flue system can be utilised if longer flue runs are required.

4.5.1 CONCENTRIC HORIZONTAL FLUE

(For concentric vertical flue, see 4.5.2).
(For twin flue applications, see 4.5.3).
The appliance flue outlet elbow can be rotated through 360° on its vertical axis. In addition the flue may be extended from the outlet elbow in the horizontal plane (see 4.4.2), however if the flue is to be extended or additional bends are to be fitted, the standard horizontal flue kit (part n° 2359029) **must** be used. A reduction must also be made to the maximum length (see table) when additional bends are used.

Reduction for bends

Bend	Reduction in maximum flue length for each bend
45° bend	0,5 metre
90° bend	1,0 metre

Horizontal flue terminals and accessories

Part No.	Description	Min-Max length
0225705	Standard telescopic flue	380mm-600mm (dimension X)
0225710	Extended telescopic flue	600mm-920mm (dimension X)
2359029	Horizontal flue kit for use with add. bends & extensions	833mm (dimension X)
2359069	750mm extension	750mm
2359079	1500mm extension	1500mm
2359049	45° bend (pair)	N/A
2359059	90° bend	N/A
0225760	Wall bracket (5)	N/A

Using the template provided, mark and drill a 115mm hole for the passage of the flue pipe. The hole should have a 1° drop from the boiler to outside, to eliminate the possibility of rainwater entering the appliance via the flue.

The fixing holes for the wall-mounting bracket should now be drilled and plugged, an appropriate type and quantity of fixing should be used to ensure that the bracket is mounted securely. Once the bracket has been secured to the wall, mount the appliance onto the bracket.

IMPORTANT

The flue restrictor ring must be inserted into the appliance flue outlet if the total flue length is less than 1.0m

FITTING THE TELESCOPIC FLUE KIT (0225705 & 0225710)

Carefully measure the distance from the centre of the appliance flue outlet to the face of the outside wall (dimension X see fig. 6). Add 50mm to dimension X to give the overall flue length (dimension Y). Using the complete telescopic flue assembly adjust the length to suit dimension Y. Once the telescopic flue terminal has been adjusted to the correct length, secure the flue assembly with the screw supplied.

Insert the flue assembly into the previously drilled flue hole and locate the flue bend over the appliance flue outlet. Push the flue bend down over the appliance flue outlet and ensure the correct seal is made. Pull the flue assembly towards and over the flue bend - using a twisting action - ensuring the correct seal is made. Check that the terminal protrudes past the finished outside wall by the correct length (115mm).

NOTE

You must ensure that the entire flue system is properly supported and connected.

Seal the flue assembly to the wall using cement or a suitable alternative that will provide satisfactory weatherproofing. The interior and exterior trim can now be fitted.

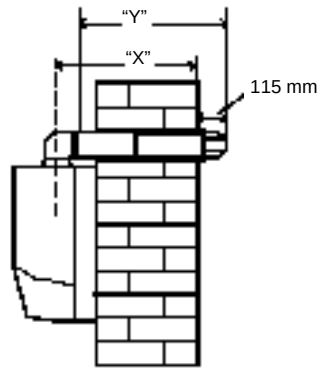

Fig. 6 "X" + 50 mm = "Y"

FITTING THE STANDARD (2359029) HORIZONTAL FLUE KIT (see 4.4.1)

Carefully measure the distance from the centre of the appliance flue outlet to the face of the outside wall (dimension X see fig. 7). Ensure the inner (60mm) pipe is fully inserted into the outer (100mm) pipe (when the inner pipe is fully inserted, it stands proud of the outer pipe by 7,5mm). Add 32mm to dimension X to give the overall flue length (dimension Y). The standard horizontal flue kit (part no. 2359029) is suitable for a distance (dimension Y) of up to 865mm.

NOTE

Dimension Y is measured from the end of the terminal to the end of the outer (100mm) pipe.

The internal trim should be fitted to the flue pipe before connection of the 90° bend.

If the horizontal flue kit (2359029) requires to be cut to the correct size (dimension Y), you must ensure that the inner (60mm) pipe stands proud of the outer (100mm) pipe by 7,5 mm (see fig. 8). Ensure any burrs are filed or removed and that any seals are located properly before assembly. Hold the inner (60mm) pipe of the terminal assembly and connect to the push-fit end of the 90° bend (supplied) using a twisting action. Insert the assembled flue into the previously drilled hole. Using the clips & screws supplied, connect the flue assembly to the boiler, ensuring that the terminal protrudes past the finished outside wall by the correct length (135mm).

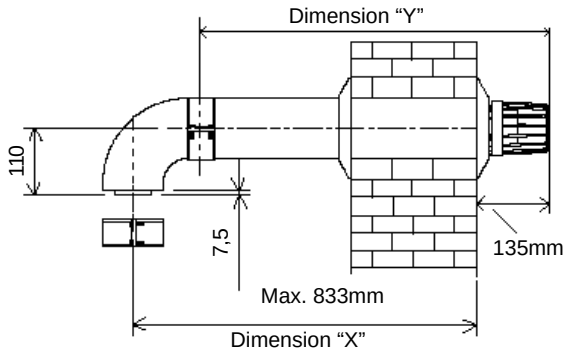

Fig. 7

You must ensure that the entire flue system is properly supported and connected.
Seal the flue assembly to the wall using cement or a suitable alternative that provides satisfactory weatherproofing. The exterior trim can now be fitted.

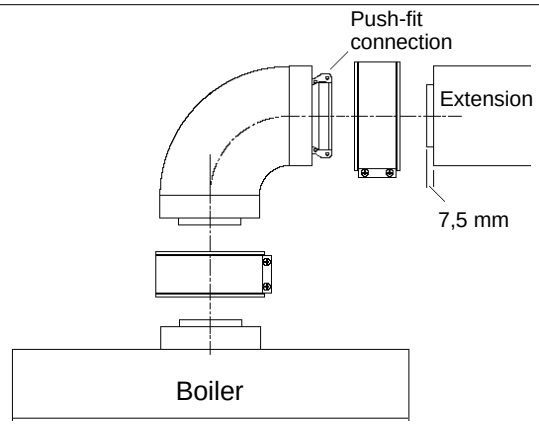

Fig. 8

EXTENDING THE HORIZONTAL FLUE

If the horizontal flue requires extension/s or additional bend/s, the horizontal flue terminal kit (2359029) must be used. Connect the bend - supplied with the terminal kit - to the top of the water heater using the clips, screws, & gaskets supplied. The additional bends & extensions have an internal push-fit connection, care should be taken to ensure that the correct seal is made when assembling the flue system. Connect the required number of flue extensions or bends (up to the maximum equivalent flue length) to the flue terminal using the clips, screws & gaskets supplied (see fig. 7 & 8).

IMPORTANT

The flue restrictor ring must be removed or discarded if the total flue length - including bends- exceeds 1.0m.

NOTE

When cutting the horizontal flue terminal or an extension to the required length, you must ensure that the excess is cut from the plain end of the terminal or extension, and that the inner (60mm) pipe is 7,5mm longer than outer (100mm) pipe (see fig. 7 & 8). Remove any burrs, and check that any seals are located properly.

You must ensure that the entire flue system is properly supported and connected.

Seal the flue assembly to the wall using cement or a suitable alternative that will provide satisfactory weatherproofing. The interior and exterior trim can now be fitted.

4.5.2 CONCENTRIC VERTICAL FLUE

The vertical flue terminal can be connected directly to the appliance flue outlet.
Alternatively, an extension or bend can be connected to the appliance flue outlet if desired (see 4.4.2), however if additional bends are fitted, a reduction must be made to the maximum flue length (see table below).

Reduction for bends

Bend	Reduction in maximum flue length for each bend
45° bend 90° bend	0,5 metre 1,0 metre

Vertical flue terminal and accessories

Part No.	Description	Length
2359039	Vertical flue terminal	1000 mm
0225770	Pitched roof flashing plate	N/A
0225765	Flat roof flashing plate	N/A
2359069	750mm extension	750mm
2359079	1500mm extension	1500mm
2359049	45° bend (pair)	N/A
2359059	90° bend	N/A
0225760	Wall bracket (5)	N/A

Using the dimensions given in fig. 9 as a reference, mark and cut a 105mm hole in the ceiling and/or roof.
Fit the appropriate flashing plate to the roof and insert the vertical flue terminal through the flashing plate from the outside, ensuring that the collar on the flue terminal fits over the flashing.

The fixing holes for the wall-mounting bracket should now be drilled and plugged, an appropriate type and quantity of fixing should be used to ensure that the bracket is mounted securely. Once the bracket has been secured to the wall, mount the appliance onto the bracket.

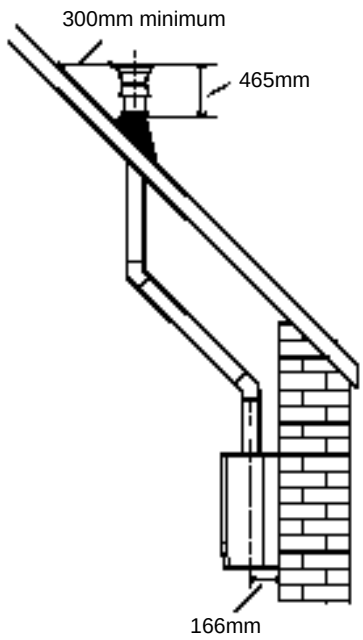

Fig. 9

The vertical flue terminal is 1.0 metre in length and cannot be cut; therefore it may be necessary to adjust the height of the appliance to suit or use a suitable extension.

Remove or discard the flue restrictor ring from the appliance flue outlet (see fig. 1), if the total flue length - including the allowance for any additional bends - exceeds 1.0 metre.

Connect the vertical flue assembly to the water heater flue spigot using the 60mm & 100mm clips, gaskets & screws (supplied), ensuring the correct seal is made. The flue support bracket (supplied with the vertical flue kit) can now be fitted.

If the vertical flue requires extension/s or additional bend/s, connect the required number of flue extensions or bends (up to the maximum equivalent flue length) between the water heater and vertical flue assembly (see fig. 8).

NOTE

When cutting an extension to the required length, you must ensure that the excess is cut from the plain end of the extension and that the inner (60mm) pipe is 7,5mm longer than outer (100mm) pipe (see fig. 8). Remove any burrs, and check that any seals are located properly.

You must ensure that the entire flue system is properly supported and connected.

4.5.3 TWIN FLUE SYSTEM

The Vokera twin flue system enables greater flue distances to be achieved (see 4.4.2) than that of the standard concentric flue system.

It can be used for horizontal or vertical applications, however the twin flue system must be converted to the dedicated concentric flue kit for termination.

It is essential that the installation of the twin flue system be carried out in strict accordance with these instructions.

GUIDANCE NOTES ON TWIN FLUE INSTALLATION

- The flue must have a fall back of 1° back to the appliance to allow any condensate that may form in the flue system to drain via the condensate drain. Consideration must also be given to the fact that there is the possibility of a small amount of condensate dripping from the terminal.
- Ensure that the entire flue system is adequately supported, use at least one bracket for each extension.
- The entire flue system must be adequately insulated to maintain heat within the flue system thereby reducing the possibility of condensate production.
- As the exhaust outlet pipe can reach very high temperatures it must be protected to prevent persons touching the hot surface.
- The condensate drain pipe must be connected in accordance with building regulations.

Twin flue accessories

Part No.	Description	Length
0225805	Horizontal flue terminal	1000 mm
0225810	Vertical flue terminal	1000 mm
300	Concentric to twin, adapter	N/A
0225770	Pitched roof flashing plate	N/A
0225765	Flat roof flashing plate	N/A
0225815	Condensate drain kit	N/A
0225820	0,25m extension (pair)	250mm
0225825	0,5m extension (pair)	500mm
0225830	1,0m extension (pair)	1000mm
0225835	2,0m extension (pair)	2000mm
0225840	45° bend (pair)	N/A
0225845	90° bend (pair)	N/A
0225850	Twin bracket (5)	N/A
0225855	Single bracket (5)	N/A

MOUNTING THE WATER HEATER

The fixing holes for the wall-mounting bracket should now be drilled and plugged, an appropriate type and quantity of fixing should be used to ensure that the bracket is mounted securely. Once the bracket has been secured to the wall, mount the appliance onto the bracket.

Reduction for bends

Bend	Reduction in maximum flue length for each bend
45° bend	1,0 metre
90° bend	1,0 metre

4.5.3.1 INSTALLATION OF CONCENTRIC TO TWIN ADAPTOR KIT (see fig. 10)

- Remove the flue restrictor ring from the appliance flue outlet (if fitted).
- Using the two holes in the concentric section of the adaptor as a guide, drill two - 3mm - corresponding holes on the appliance flue outlet.
- Fit the adaptor to the appliance flue outlet and secure it using the screws provided.

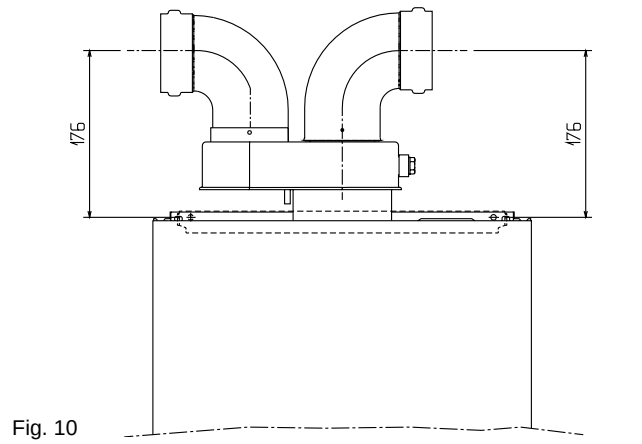

Fig. 10

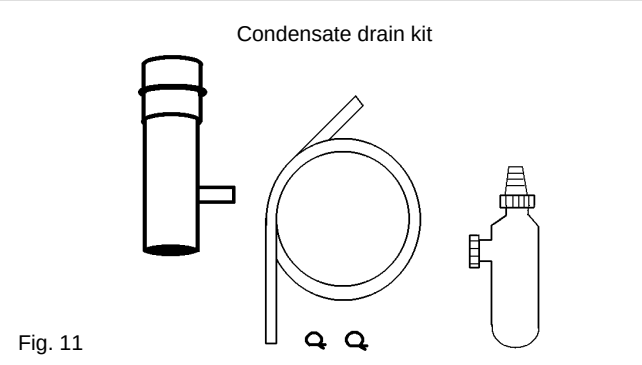

Fig. 11

4.5.3.2 INSTALLATION OF CONDENSATE DRAIN KIT (see fig. 11)

The condensate drain kit must be fitted within 1 metre of the appliance flue outlet. It is recommended that the condensate drain kit should be fitted in the vertical plane, however it can be fitted horizontally with care.

- Fit the first bend to the condensate drain kit or exhaust connection manifold by firmly pushing in to position.
- Using the two holes in the exhaust connection manifold as a guide, drill a 3mm hole in each and secure using the screws provided.
- Connect the air inlet pipe to the air baffle as above.
- The twin flue pipes extensions and accessories can now be installed by pushing together (the plain end of each extension or bend should be pushed approximately 50mm into the female socket of the previous piece).

4.5.3.3 HORIZONTAL TERMINATION (see fig. 12)

The twin flue system must be converted to the dedicated concentric flue kit for termination.

- The horizontal terminal is supplied with a built-in converter box and cannot be shortened.
- A 130mm hole is required for the passage of the concentric terminal through the wall.
- The air inlet pipe must always be level with or below, that of the exhaust pipe.

Depending on site conditions it may be preferable to install the terminal assembly prior to fitting the twin flue pipes.

Mark and drill a 130mm hole for the passage of the horizontal flue terminal, ensuring that there is a 1° fall back to the water heater (17mm per 1000mm). Insert the terminal assembly into the flue hole.

Push-fit the twin flue pipes onto the concentric to twin converter box ensuring that the exhaust pipe connects to the exhaust connection on the concentric to twin converter.

If necessary cut the plain ends (male) of the twin flue pipes to allow connection to the concentric to twin converter.

NOTE

- Before cutting twin flue pipes ensure allowances have been made for connection onto the previous piece and onto the concentric to twin converter. The last twin flue pipes must be pushed 50mm onto the male spigots of the concentric to twin converter.
- You must ensure that the entire flue system is properly supported and connected.
- Seal the flue terminal assembly to the wall using cement or a suitable alternative that will provide satisfactory weatherproofing. The interior and exterior trim can now be fitted.

4.5.3.4 VERTICAL TERMINATION (see fig. 13)

The twin flue system must be converted to the dedicated concentric flue kit for termination.

- The vertical terminal is supplied with a built-in converter box and cannot be shortened.
- A 130mm hole is required for the passage of the concentric terminal through the ceiling and/or roof.

Depending on site conditions it may be preferable to install the terminal assembly prior to fitting the twin flue pipes.

Fit the appropriate flashing plate to the roof and insert the vertical flue terminal through the flashing plate from the outside, ensuring that the collar on the flue terminal fits over the flashing.

Push-fit the twin flue pipes onto the concentric to twin converter ensuring that the exhaust pipe connects to the exhaust connection on the concentric to twin converter.

If necessary cut the plain ends (male) of the twin flue pipes to allow connection to the concentric to twin converter.

NOTE

- Before cutting twin flue pipes ensure allowances have been made for connection onto the previous piece and onto the concentric to twin converter. The last twin flue pipes must be pushed 50mm onto the male spigots of the concentric to twin converter.
- You must ensure that the entire flue system is properly supported and connected.
- Ensure that any horizontal sections of pipe have a 1° fall towards the appliance (17mm per 1000mm).

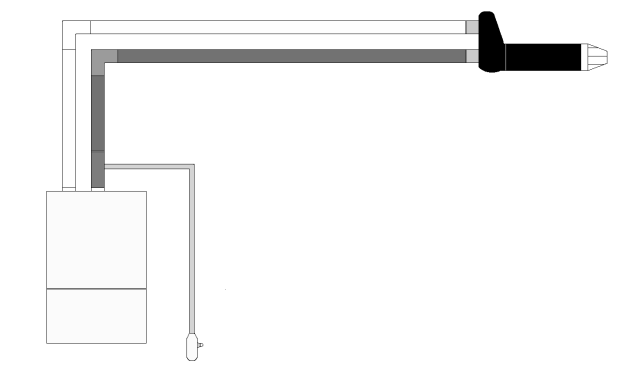

Fig. 12

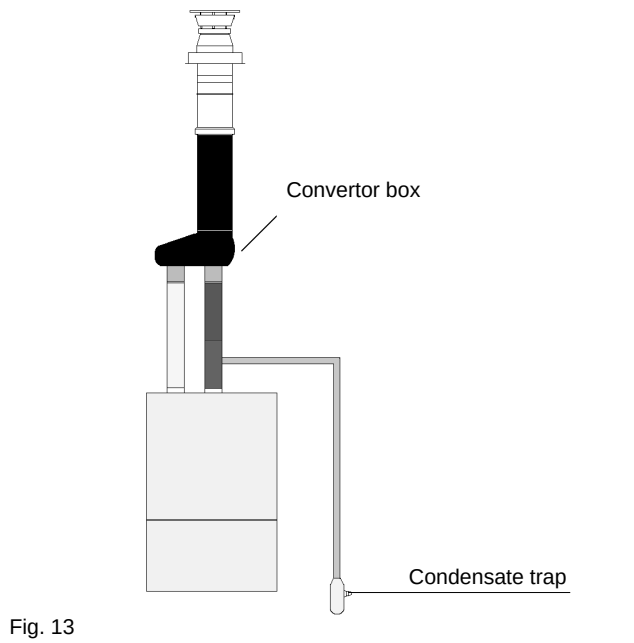

Fig. 13

4.6 CONNECTING THE GAS AND WATER

The appliance is supplied with an accessories pack that contains sealing washers and service valves. The service valves are of the compression type. When connecting pipe work to the valves, tighten the compression end first, then insert the sealing washers before tightening the valve to the appliance.

NOTE
It will be necessary to hold the valve with one spanner whilst tightening with another.

4.6.1 GAS (see fig. 4)

The appliance is supplied with a 15mm service valve, connect a 15mm pipe to the inlet of the valve and tighten both nuts.

NOTE
It will be necessary to calculate the diameter of the gas supply pipe to ensure the appliance has an adequate supply of gas.

4.6.2 COLD INLET (see fig. 4)

The appliance is supplied with 15mm stopcock for the cold water inlet connection, connect a 15mm pipe to the inlet of the valve and tighten the nut.

4.6.3 HOT WATER OUTLET (see fig. 4)

The appliance is supplied with 15mm connector for the hot water outlet connection, connect a 15mm pipe to the outlet of the connector and tighten the nut.

4.7 ELECTRICAL CONNECTIONS

The electrical supply must be as specified in 3.7. The appliance is supplied, pre-wired with a 0,9 metre length of flex, connect the wires as follows:

- connect the Brown wire to the L (Live) terminal of the plug or fused isolator;
- connect the Blue wire to the N (Neutral) terminal of the plug or fused isolator;
- connect the Green/Yellow wire to the E (Earth) terminal of the plug or isolator;
- ensure the plug or fused isolator is fitted with a 3-amp fuse.

4.7.1 CASING REMOVAL

To gain internal access to the appliance you must first remove the casing, proceed as outlined below:

- locate and remove the 4 screws that secure the controls fascia to the appliance casing (see fig. 14);
- lift the casing upward to disengage it from the top locating hooks and then remove;
- gently lower the control fascia until it rests;
- store the casing and screws safely until required. Re-fit in the reverse order.

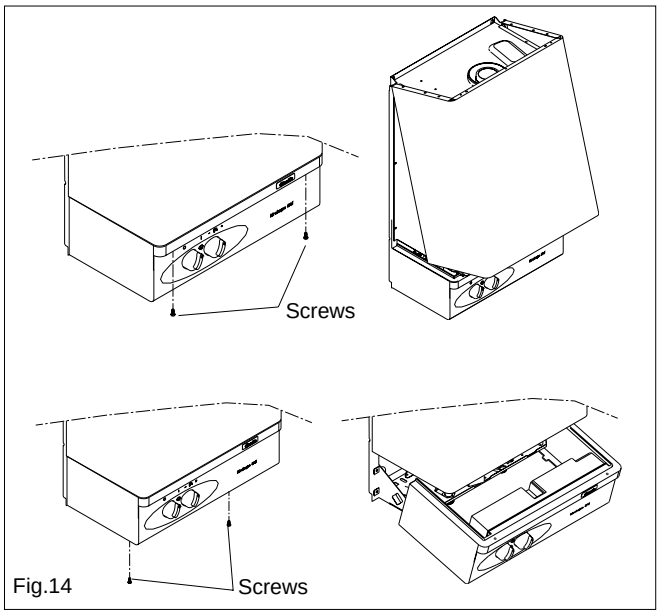

Fig.14

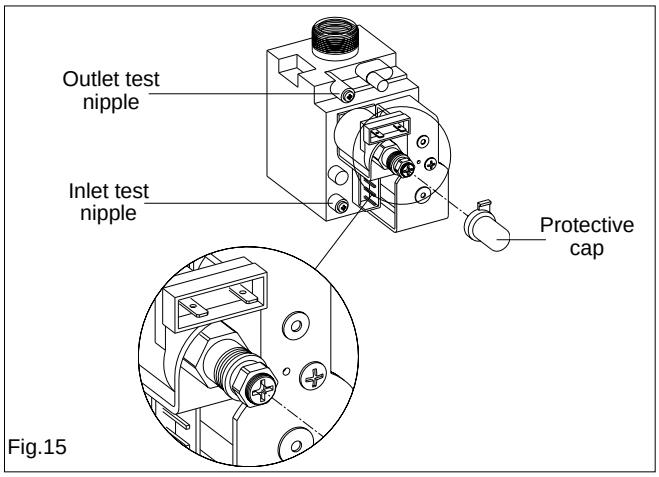

Fig.15

5.1 GAS SUPPLY INSTALLATION

Inspect the entire installation including the gas meter, test for soundness and purge. Refer to BS 6891 for specific instruction.

5.2 WATER PIPE WORK

The water pipe work shall be flushed and tested in accordance with the Water Supply (water fittings) Regulations (Water Byelaws Scotland).

5.3 PRE-OPERATION CHECKS

Before attempting the initial lighting of the appliance, the following checks must be carried out:

- ensure all gas service valves from the meter to the appliance are open and the supply pipe has been properly purged;
- ensure the proper electrical checks have been carried out (see 7.7), particularly continuity, polarity and resistance to earth;
- ensure the 3 amp fuse – supplied with the appliance – has been fitted;
- ensure the appliance and associated pipe work has been filled and vented;
- ensure the flue system has been fitted properly and in accordance with the instructions;
- ensure all appliance service valves are open.

5.4 INITIAL LIGHTING

Ensure the electrical supply to the appliance is switched on. Turn the selector knob to the 'on' position (fig. 1). Open a hot water outlet (preferably a bath tap) and ensure the flow rate exceeds 2 litres per minute.

The appliance will now go through an ignition sequence as described in 1.2. Should the appliance fail to ignite, refer to 5.3 and/or section 7 (fault finding).

5.5 CHECKING THE BURNER PRESSURE

Although the burner pressure is factory set, it is necessary to check it during commissioning. Isolate the appliance from the electrical supply and attach a suitable manometer to the gas valve outlet test nipple (see fig. 15). Light the appliance as described in 5.4 and compare the reading on the manometer with the values described in 2.2. If adjustement is required, follow the detailed instructions in section 7 (7.3).

Once the burner pressure has been checked, isolate the appliance from the electrical supply, remove the manometer, and tighten the gas valve outlet test nipple.

5.6 SETTING THE OUTLET TEMPERATURE

The hot water outlet temperature can be adjusted between 40°C - 65°C via the thermostat knob (see fig. 1).

5.7 FINAL CHECKS

- ENSURE ALL TEST NIPPLES ON THE APPLIANCE GAS VALVE HAVE BEEN TIGHTENED AND CHECKED FOR SOUNDNESS.
- ENSURE THE APPLIANCE FLUE SYSTEM IS FITTED CORRECTLY AND IS PROPERLY SECURED.
- ENSURE ALL PIPE WORK IS RE-CHECKED FOR SOUNDNESS.
- RE-FIT APPLIANCE CASING.

Complete details of the installation in the warranty card supplied with the appliance. This is an important document, which must be correctly completed and handed to the user. Failure to install and commission the appliance to the manufacturers instructions may invalidate the warranty.

5.8 INSTRUCTING THE USER

Hand over all documentation supplied with this appliance – including these instructions – and explain the importance of keeping them in a safe place.

Explain to the user how to isolate the appliance from the gas, water and electricity supplies, and the locations of all drain points.

Show the user how to operate the appliance and its controls correctly.

Explain to the user how to turn off the appliance for both long and short periods, and advise on the necessary precautions to prevent frost damage. Explain to the user that for continued safe and efficient operation, the appliance must be serviced annually by a competent person.

6.1 GENERAL

To ensure the continued safe and efficient operation of the appliance, it is recommended that it is checked and serviced at regular intervals.

The frequency of servicing will depend upon the particular installation conditions, but in general, once per year should be adequate.

It is the law that any servicing work is carried out by competent person such as a Vokera engineer, an approved service agent, British Gas, or other CORGI registered personnel.

The following instructions apply to the appliance, but it should be remembered that the domestic hot water system will also require attention from time to time.

6.2 ROUTINE ANNUAL SERVICING

- Check the operation of the appliance and ensure it functions as described in section 7.
- Compare the performance of the appliance with its design specification. The cause of any noticeable deterioration should be identified and rectified without delay.
- Thoroughly inspect the appliance for signs of damage or deterioration especially the flue system and the electrical apparatus.
- Check and adjust – if necessary – all burner pressure settings (see 7.3).
- Carry out an analysis of the flue gases (see 7.4), and visually check the condition of the entire flue assembly.
- Compare the results with the appliance design specification. Any deterioration in performance must be identified and rectified without delay.
- Ensure both flue venturis are clean and free from any debris or obstruction.
- Ensure both the burner and heat exchanger are clean and free from any debris or obstruction.
- Inspect all joints for signs of leakage and repair if necessary.
- Refer to the commissioning section and/or replacement of parts section for detailed instruction if required.

6.3 REPLACEMENT OF COMPONENTS

Although it is anticipated that this appliance will give years of reliable, trouble free service, the life span of components will be determined by factors such as operating conditions and usage. Should the appliance develop a fault, the fault finding section will assist in determining which component is malfunctioning.

6.4 COMPONENT REMOVAL PROCEDURE

To remove a component, access to the interior of the appliance is essential. Isolate the appliance from the electrical supply and remove the fuse. And when necessary, close all service valves on the appliance, remove the appliance casing as described in section 4.7.1, drain the water content from the appliance via an outlet or appropriate drain point. Ensure some water absorbent cloths are available to catch any residual water that may drip from the appliance or removed component. Undertake a complete commissioning check as detailed in section 5, after replacing any component. **ALWAYS TEST FOR GAS SOUNDNESS IF ANY GAS CARRYING COMPONENTS HAVE BEEN REMOVED OR DISTURBED.**

6.5 NTC THERMISTORS (see fig. 1)

Carry out component removal procedure as described in 6.4.
Locate and remove the ten screws that secure the air chamber cover.
Remove the air chamber cover.
Disconnect thermistor electrical plug. Using a 13mm spanner slacken and remove the thermistor and sealing washer. Replace in the reverse order.

6.6 HIGH LIMIT THERMOSTAT (see fig. 1)

Carry out component removal procedure as described in 6.4.
Locate and remove the ten screws that secure the air chamber cover. Remove the air chamber cover.
Pull off electrical connections from the high limit thermostat, slacken and remove retaining screws. Replace in the reverse order.

6.7 FLOW SWITCH (see fig. 16)

Carry out component removal procedure as described in 6.4.
Remove the appliance casing as described in 4.7.1. Disconnect the cold water inlet pipe from the bottom connection of the flow switch. Disconnect the outlet pipe from the top connection of the flow switch. Detach the electrical plug/ wires from the flow switch. Slacken and remove the lock-nut that secures the flow switch to the lower frame. Replace in the reverse order.

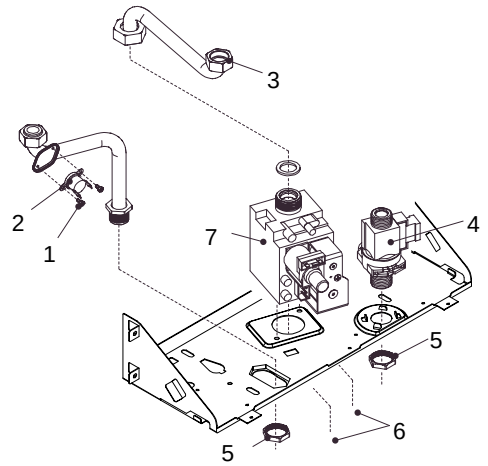

1 Screws
2 High limit thermostat
3 Outlet pipe
4 DHW flow switch
5 Locknut
6 Gas valve securing screws
7 Gas valve

Fig. 16

6.7.1 PRINTED CIRCUIT BOARD (PCB) (see fig. 17)

Carry out component removal procedure as described in 6.4.

Remove the appliance casing as described in 4.7.1. Carefully slide out the control panel until the lugs on the lower right and left side of the panel are free from the slots on the appliance frame. Remove the electrode lead from its clip on the PCB housing. Locate and remove the two screws which secure the PCB cover & terminal cover, then remove cover, after carefully taking note of all wiring connections, disconnect all wiring from the PCB, locate and remove the PCB securing screws, remove PCB.

Replace in the reverse order.

NOTE

Ensure that the replacement PCB has the correct "Jumper Tag" configuration (see section 8).

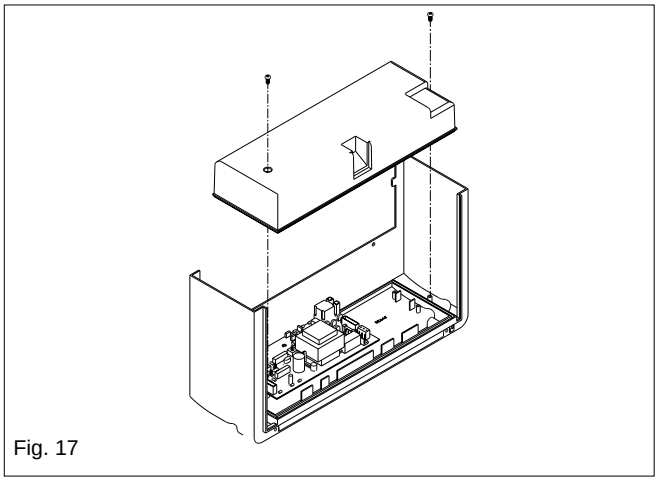

Fig. 17

6.8 GAS VALVE (see fig. 16)

Carry out component removal procedure as described in 6.4. Remove the appliance casing as described in 4.7.1.

The gas valve must be changed as complete unit. Disconnect the electrical plug and leads from the gas valve. Disconnect compensator tube from gas valve regulator. Slacken and unscrew gas valve inlet and outlet connections. **Please note**, the sealing washers must be discarded and replaced with new sealing washers. Locate and remove gas valve retaining screws on the underside of the appliance. The gas valve can now be removed. Replace in the reverse order. Check and adjust burner pressure settings. **WARNING, A GAS SOUNDNESS CHECK MUST BE CARRIED OUT.**

6.9 BURNER, INJECTORS AND SPARK/SENSE ELECTRODE (see fig. 18a,b,c)

Carry out component removal procedure as described in 6.4. Remove the appliance casing as described in 4.7.1.

Locate and remove the ten screws that secure the air chamber cover. Remove the air chamber cover. Locate and remove the 5 screws securing the front combustion cover and retaining plate, pull the cover towards you before lowering and disengaging.

Disconnect the electrode lead from its connector. Disconnect the gas valve outlet pipe from its connection to the burner. Slacken and remove the lock-nut that secures the burner assembly to the air chamber base. The burner can now be removed. With the burner assembly removed, slacken and remove the burner bar retaining clips in order to gain access to the injectors. Replace in the reverse order. **Please note**, the injector sealing washers must be replaced if the injectors have been removed, ensure all seals are in good condition, taking care to ensure they are replaced correctly.

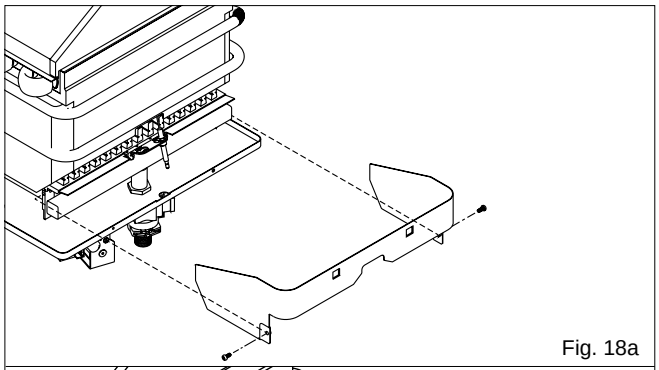

Fig. 18a

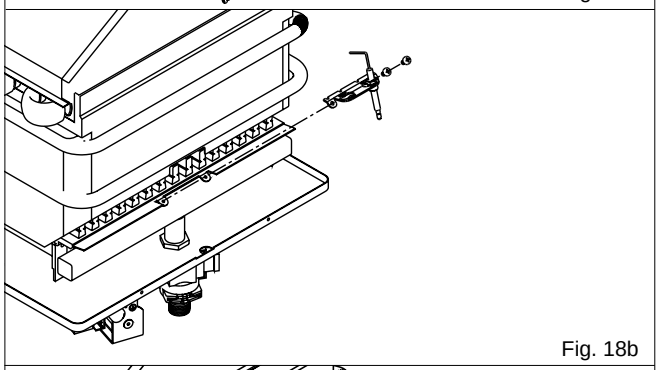

Fig. 18b

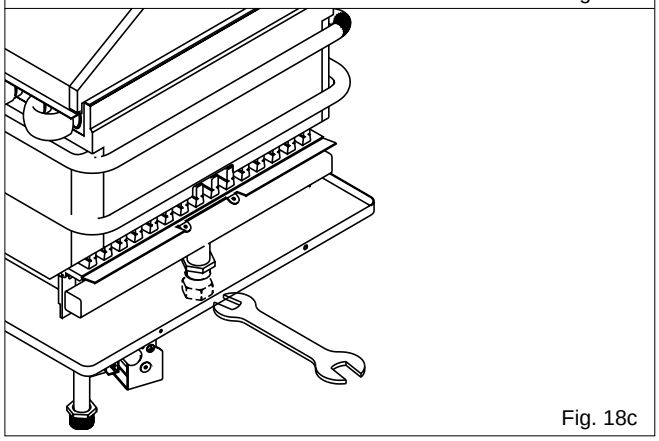

Fig. 18c

6.10 FLUE FAN (see fig. 19)

Carry out component removal procedure as described in 6.4. Remove the appliance casing as described in 4.7.1.

Locate and remove the 10 screws that secure the air chamber cover. Remove the air chamber cover. Locate and remove the 4 screws that secure the flue assembly. Disconnect the electrical connections and silicone tubes attached to the fan, noting their positions. Disconnect the maintainence clip that secures the flue outlet pipe to the fan, ease the fan & flue hood assembly from its location. Locate and remove the screws that secure the fan to the flue hood. Remove the fan

to flue elbow. Replace in the reverse order. Ensure all seals are in good condition, taking care to ensure they are replaced correctly.

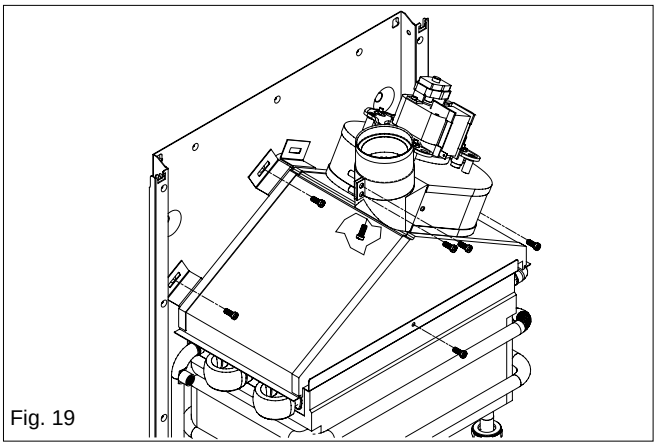

Fig. 19

6.11 HEAT EXCHANGER (see fig. 20)

Carry out component removal procedure as described in 6.4. Remove the appliance casing as described in 4.7.1.
Locate and remove the 10 screws that secure the air chamber cover. Remove the air chamber cover. Locate and remove the 5 screws securing the front combustion cover and retaining plate. Disconnect the inlet and outlet connections on the heat exchanger. The heat exchanger can now be withdrawn from the appliance (if necessary, the burner should be removed to facilitate access to the connections). Replace in the reverse order. Ensure all seals are in good condition, taking care to ensure they are replaced correctly.

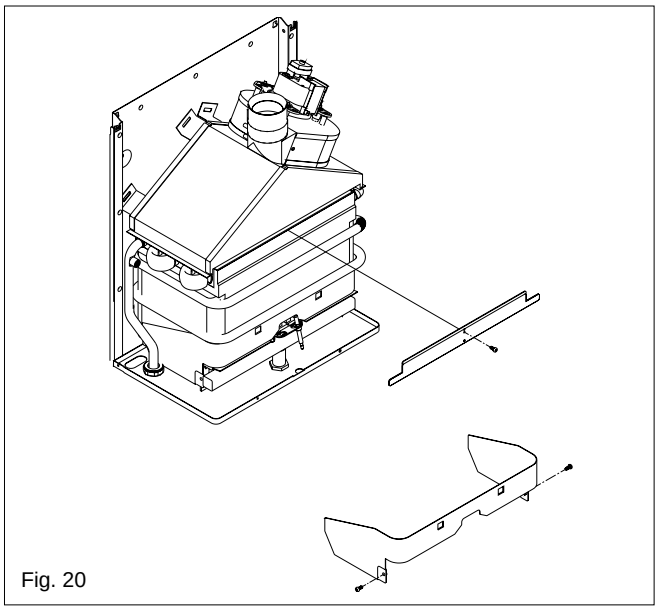

Fig. 20

6.12 AIR PRESSURE SWITCH (see fig. 1)

Carry out component removal procedure as described in 6.4. Remove the appliance casing as described in 4.7.1.
Locate and remove the 10 screws that secure the air chamber cover. Remove the air chamber cover. Locate and remove the two screws holding the air pressure switch to the air chamber. Disconnect the electrical connections and silicone tubes attached to the air pressure switch, noting their positions. Replace in the reverse order. Ensure all seals are in good condition, taking care to ensure they are replaced correctly.

SECTION 7 CHECKS, ADJUSTMENTS, AND FAULT FINDING

7.1 CHECKING APPLIANCE OPERATION

When carrying out any repairs or servicing to the appliance, the relevant commissioning procedure must be undertaken to ensure the continued safe operation of the appliance. Particular attention should be made to ensure gas soundness, water soundness, and the electrical integrity of the appliance.

7.2 APPLIANCE MODE OF OPERATION

When there is a request for hot water via a hot water outlet or tap, the water flow switch senses water movement thereby energising the fan.

NOTE

There must be sufficient inlet water pressure and flow (min. 0,15 bar/ 2 lpm) to ensure the water flow switch is activated. If there is insufficient pressure and/or flow, the appliance will be prevented from operating. When the fan runs, it proves the differential air pressure switch which in-turn allows an ignition sequence to begin.

NOTE

The ignition sequence lasts approximately 7 seconds, during which the appliance will continue to spark even if the burner has already lit. If the spark/sensing electrode does not sense ignition the appliance will then go to lockout. Ignition is sensed by the electronic circuitry to ensure flame stability at the burner. Once successful ignition has been achieved, the electronic circuitry allows the full gas rate through the appliance.

When the appliance reaches the desired temperature the burner will modulate to maintain the set temperature. Should the temperature continue to rise the burner will shut off when the maximum operating temperature is attained.

When the request for heat and/or hot water has been satisfied, the fan may continue to operate to dissipate any residual heat within the appliance.

7.3 CHECKING AND ADJUSTING BURNER PRESSURE (see fig. 17)

Altough the burner pressure is factory set, it is necessary to check it during servicing or if the gas valve has been removed. Isolate the appliance from the electrical supply and attach a suitable manometer to the gas valve outlet test nipple. Remove the compensator tube.

7.3.1 SETTING THE MAXIMUM BURNER PRESSURE

Light the appliance as described in 5.6 and compare the reading on the manometer with the value described in 2.2. If adjustement is required, remove the protective cap from the gas valve modulating coil assembly and turn the outer (10mm) nut clockwise to increase, or counter-clockwise to decrease the burner pressure.

NOTE

You should ensure that one or two hot water outlets are fully open during the above procedure. This will ensure that the output of the appliance (burner pressure) is not compromised due to a high outlet temperature.

7.3.2 SETTING THE MINIMUM BURNER PRESSURE

Once the maximum burner pressure has been checked and/or adjusted, remove one of the grey wires from the modulating coil. Compare the reading on the manometer with the value described in 2.2. If adjustement is required, turn the inner (red) cross-head screw clockwise to increase, or counter-clockwise to decrease the burner pressure, whilst ensuring that the outer (10mm) nut does not move. When checking and/or adjustement has been completed, isolate the appliance from the electrical supply, replace the protective cap, refit the compensator tube, refit the grey wire to the modulating coil, remove the manometer, and tighten the outlet test nipple.

IMPORTANT: A GAS SOUNDNESS CHECK MUST BE CARRIED OUT.

7.4 EXTERNAL FAULTS

Before carrying out any fault-finding or component replacement, ensure the fault is not attributable to any aspect of the installation.

7.4.1 INSTALLATION FAULTS

Symptom	Possible causes
No ignition	Check external wiring. Check cold supply is connected to cold inlet.
Poor hot water	Check gas supply. Check adjust flow rate.
Unstable flame picture	Check flue system

7.5 ELECTRICAL CHECKS

Any electrical checks must be carried out by a suitably qualified person.

7.5.1 EARTH CONTINUITY TEST

Isolate the appliance from the electrical supply, and using a suitable multi-meter carry out a resistance test. Connect test leads between an appliance earth point and the earth wire of the appliance supply cable. The resistance should be less than 1 ohm. If the resistance is greater than 1 ohm check all earth wires and connectors for continuity and integrity.

7.5.2 SHORT CIRCUIT CHECK

Isolate the appliance from the electrical supply, and using a suitable multi-meter, carry out a short circuit test between the Live & Neutral connections at the appliance.

Repeat above test on the Live & Earth connections at the appliance term.

NOTE

Should it be found that the fuse has failed but no fault is indicated, a detailed continuity.
Check will be required to trace the fault. A visual inspection of components may also assist in locating the fault.

7.5.3 POLARITY CHECK

With the appliance connected to the electrical supply and using a suitable multi-meter, carry out the following voltage tests:

- connect test leads between the Live & Neutral connections at the appliance. The meter should read approximately 230V ac. If so proceed to next stage. If not, see 7.5.4.
- connect test leads between the Live & Earth connections at the appliance. The meter should read approximately 230V ac. If so proceed to next stage. If not, see 7.5.4.
- Connect test leads between the Neutral & Earth connections at the appliance. The meter should read approximately 0 – 15Vac. If so polarity is correct. If not, see 7.5.4.

7.5.4 REVERSED POLARITY OR SUPPLY FAULT

Repeat the above tests at the appliance isolator, if testing reveals correct polarity and/or supply at the isolator, re-check wiring and connections between the isolator and the appliance.
If tests on the isolator also reveal reversed polarity or a supply fault, consult the local electricity supplier for advice.

7.5.5 RESISTANCE TO EARTH CHECK

Isolate the appliance from the electrical supply, and using a suitable multi-meter carry out a resistance test. Connect test leads between the Live & Earth connections at the appliance. If the meter reads other than infinity there is a fault that must be isolated, carry out a detailed continuity check to identify the location of the fault.

IMPORTANT

These series of checks must be carried out before attempting any fault-finding procedures on the appliance. On completion of any task that required the disconnection and re-connection of any electrical wiring or component, these checks must be repeated.

7.6 FAULT FINDING

Before attempting any fault-finding, the electrical checks as detailed in 7.5 must be carried out.

Isolate the appliance from the electrical supply and remove the casing and PCB cover.

Restore the electrical supply to the appliance, turn the selector switch to the “on” position, and open a hot water outlet. The appliance should now function as described in section 7.2. Should the appliance fail to respond, the internal fuse and connectors should be checked to ensure

integrity and continuity. If the appliance still fails to respond, refer to the detailed fault-finding flowcharts overleaf.

7.7 FAULT CODES

Green LED	Red LED	Status	Action required
On for 1 second, off for 5 seconds	Off	Switched off or at stand-by	NONE
On	Off	DHW request	NONE
Off	On	Flame lockout	Check gas supply, check ignition sequence
On	Flashing on/off every 0,5 seconds	Overheating	Allow to cool, check operation of appliance
Flashing on/off every 0,5 seconds	Off	Air pressure switch “open”	Check flue system, check air pressure switch and/on fan
Flashing on/off every 0,5 seconds	Flashing on/off every 0,5 seconds	NTC thermistor fault	Check NTC thermistor

FAULT FINDING TEST '1'

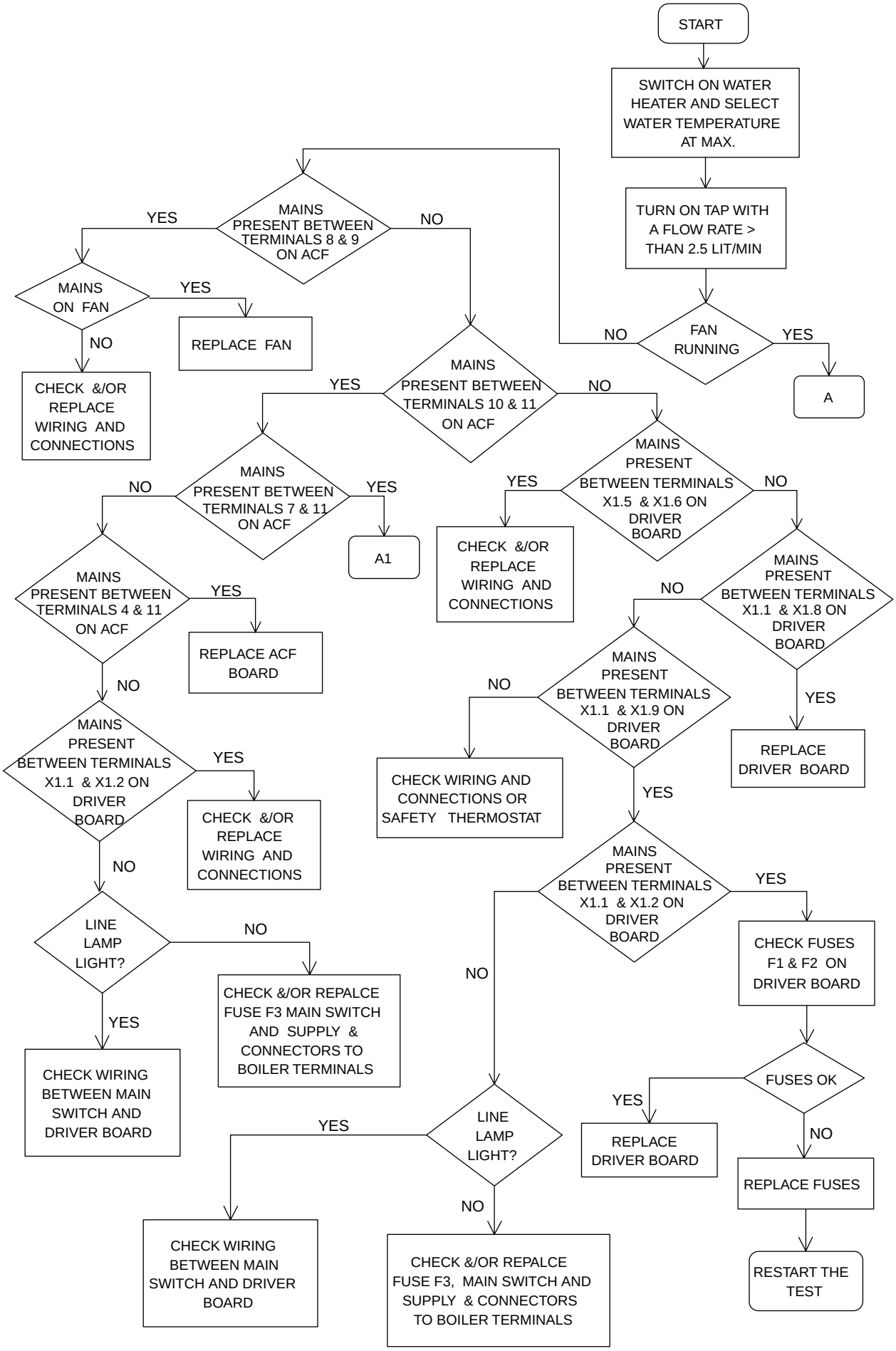

FAULT FINDING TEST '2'

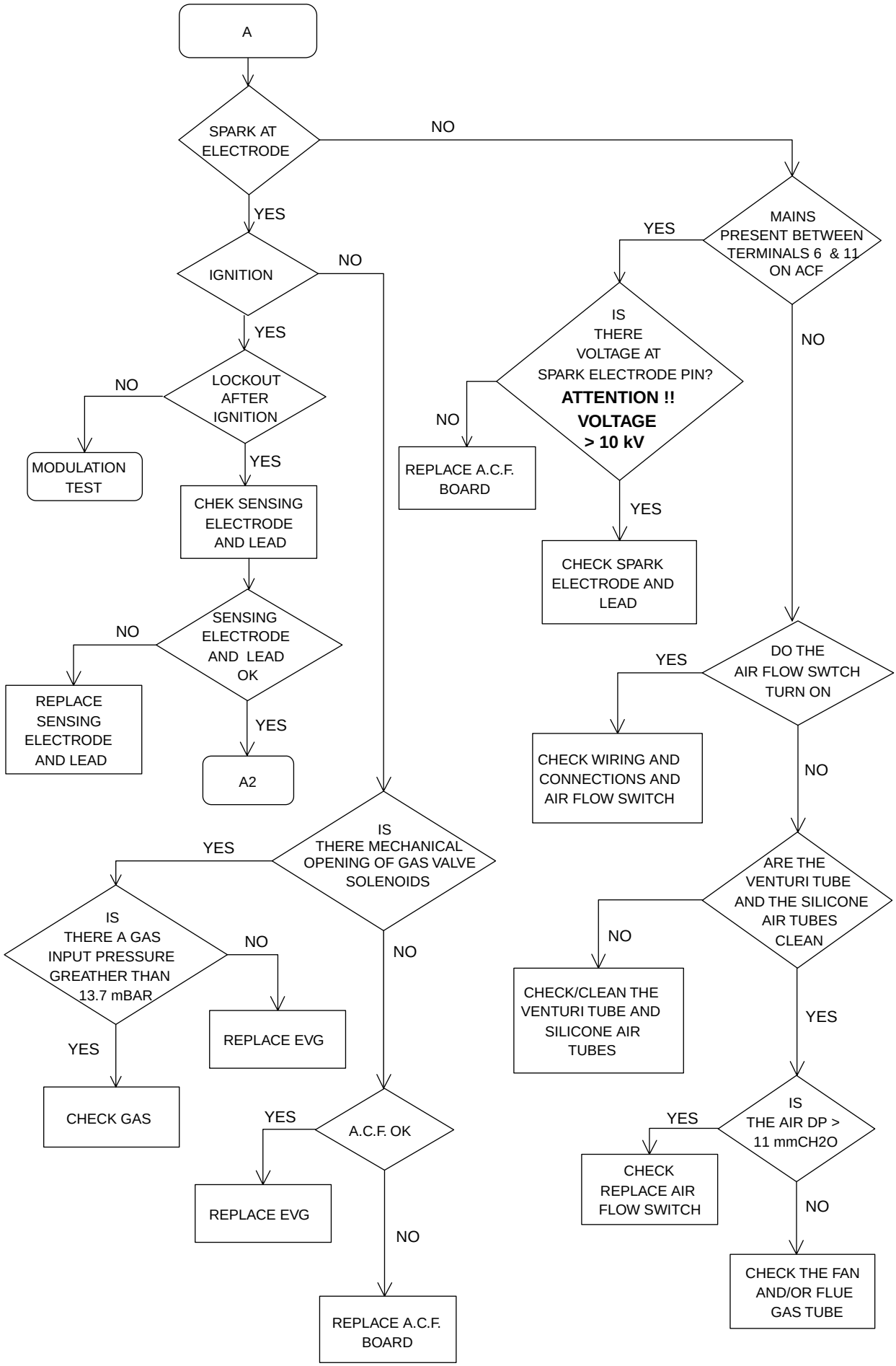

FAULT FINDING TEST '3'

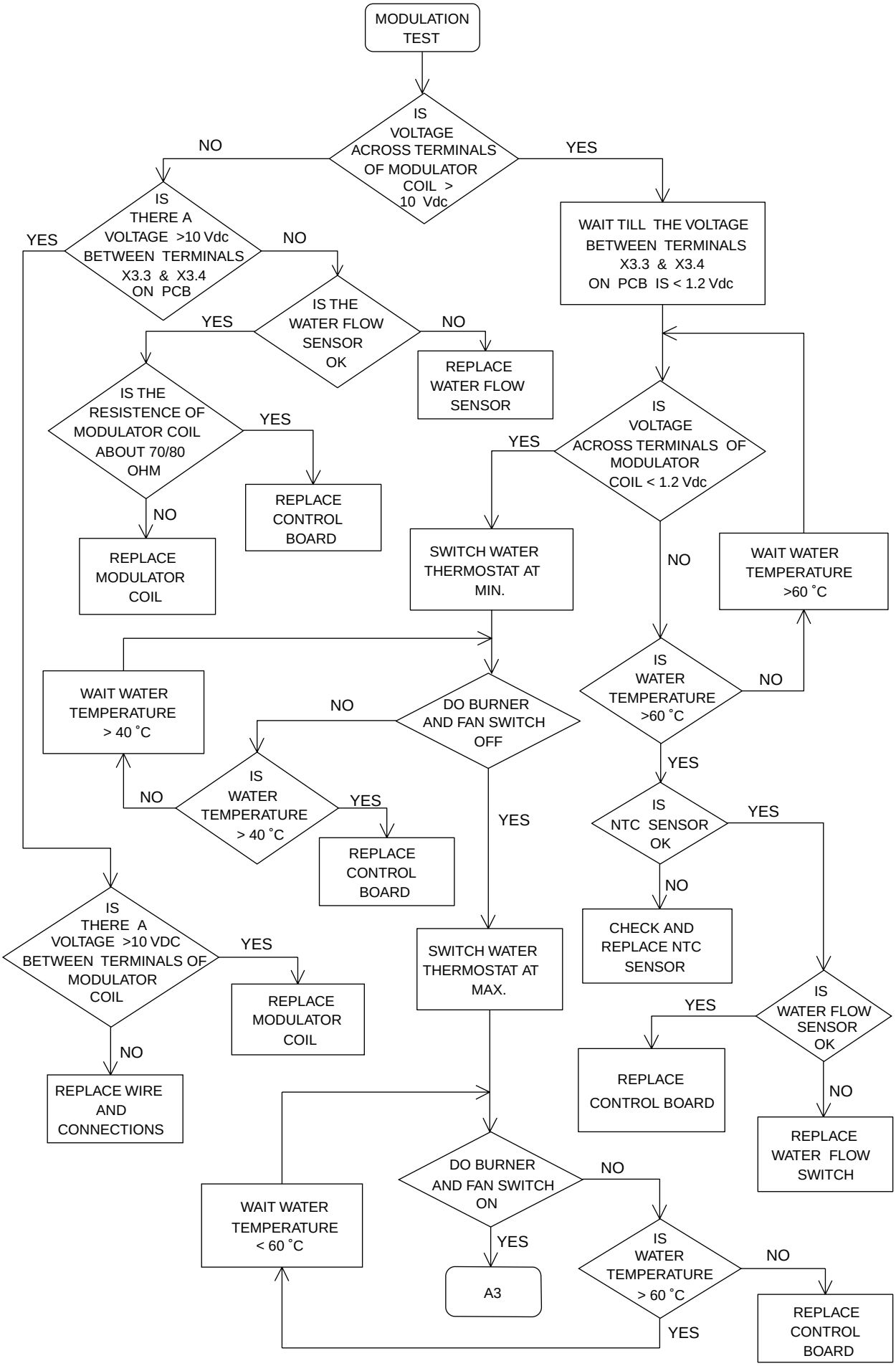

FAULT FINDING TEST '4'

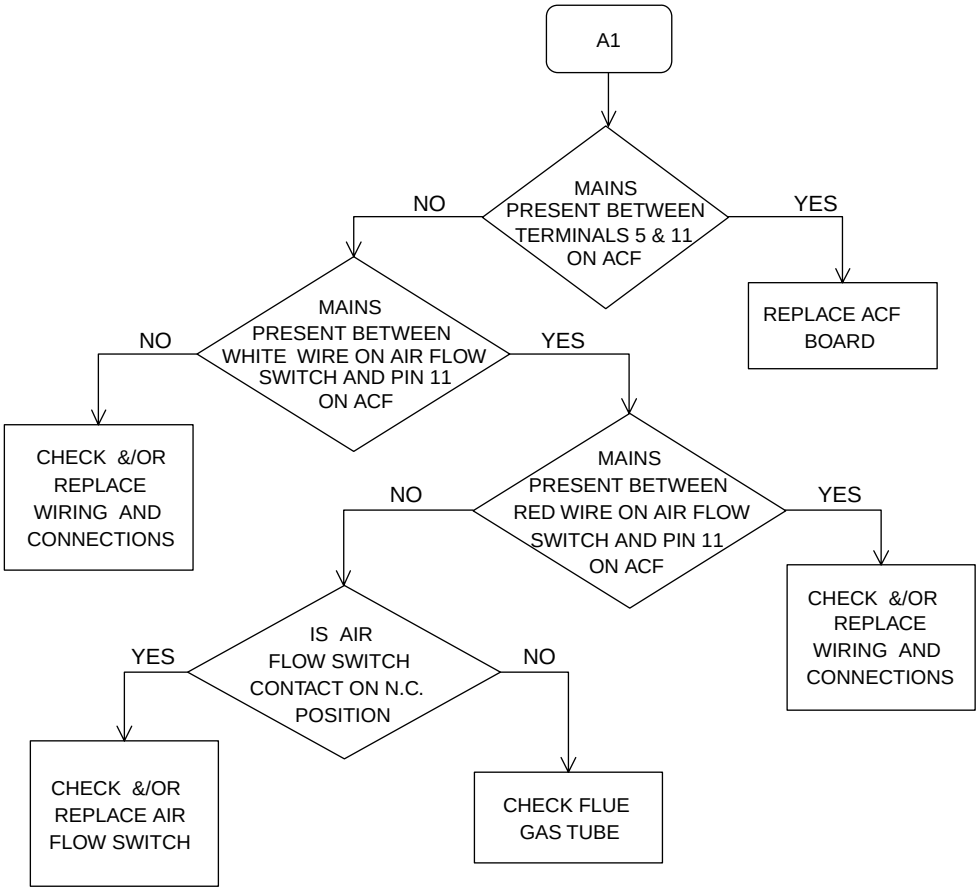

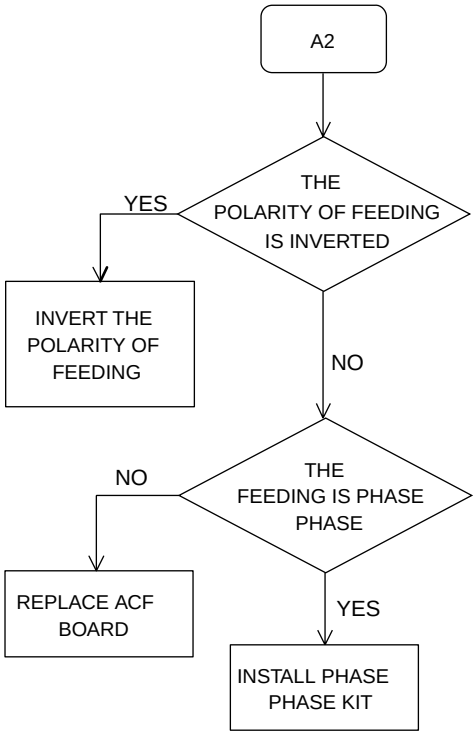

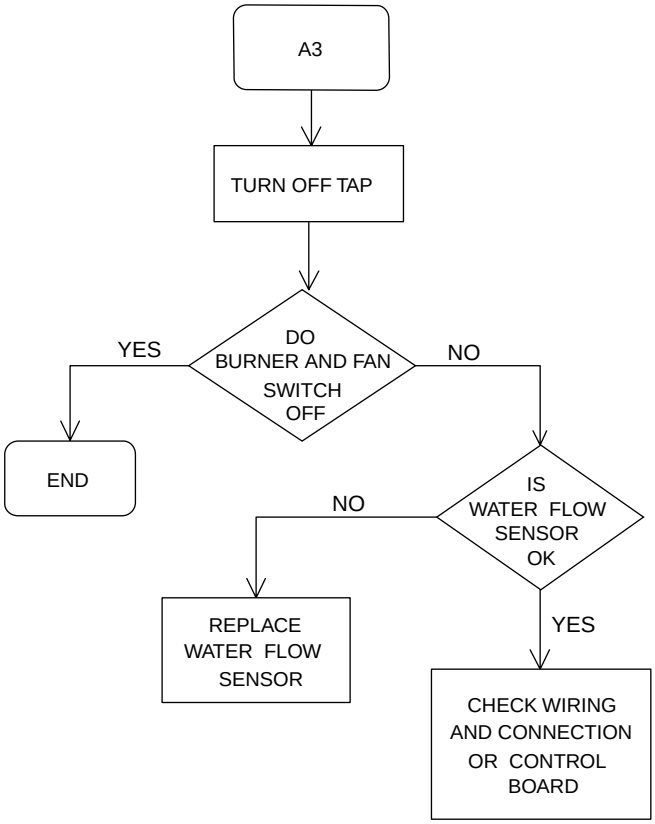

8.1 EXTERNAL WIRING

The appliance comes with a factory fitted cable that should be connected to a suitable fused isolator or plug. If this is unsuitable and a direct connection to the appliance is required, it must be connected to the appliance as shown in the following diagram. For further advice on the electrical connection, please contact Vokera technical on 0870 333 0520.

FUNCTIONAL DIAGRAM

NOTE: L-N connection is advisable

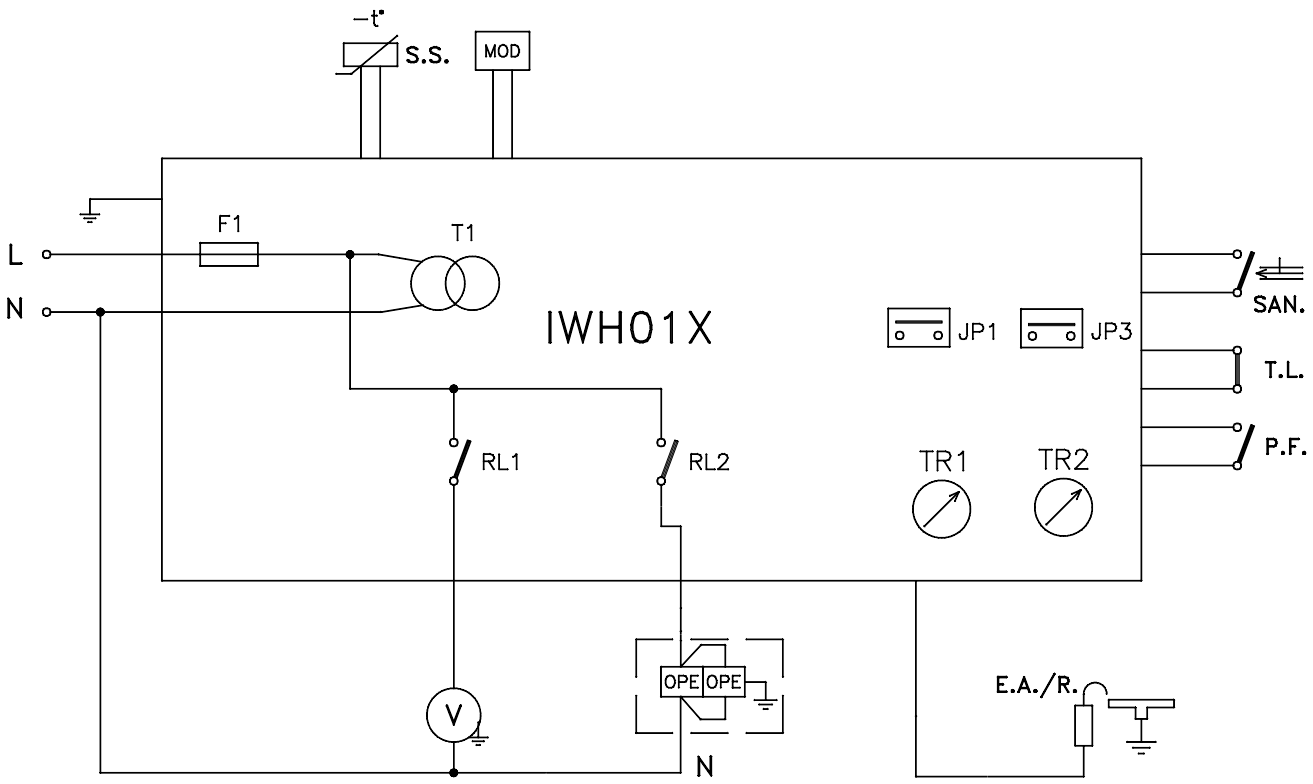

TR1	DHW temperature control	RL2	Ignition relay
TR2	Selector ON/OFF	MOD	Modulator
JP1	Natural gas or LPG selector jumper	V	Fan
P.F.	Air pressure switch	IWH01X	Control board
T.L.	High limit thermostat	T1	Transformer
SAN	Flow switch	OPE	Gas valve solenoids
F1	Fuse 2A F	CN1-CN7	Connectors
E.A.R.	Sense/ignition electrode	T2	Ignition/transformer
RL1	Fan relay		

FUNCTIONAL DIAGRAM

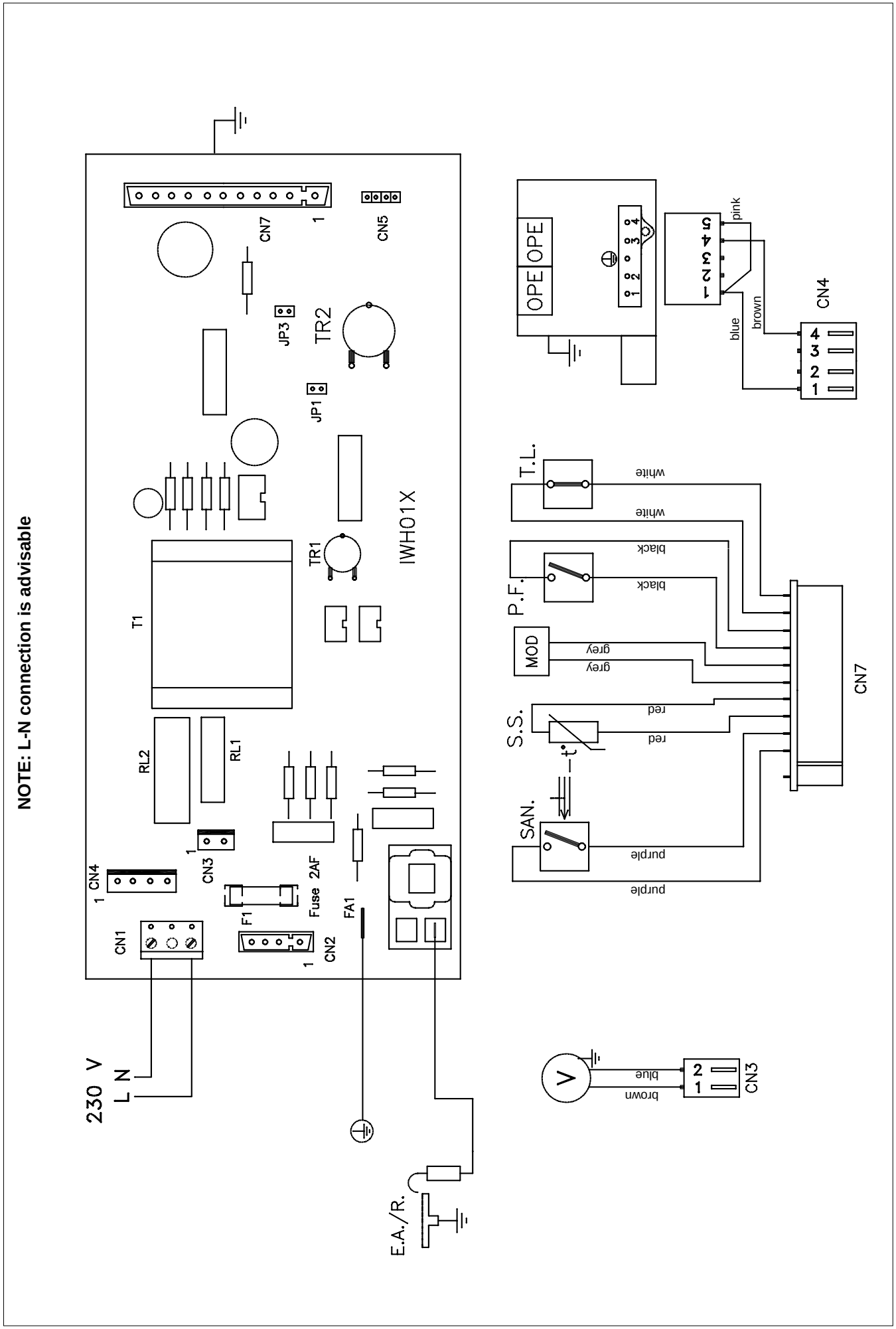

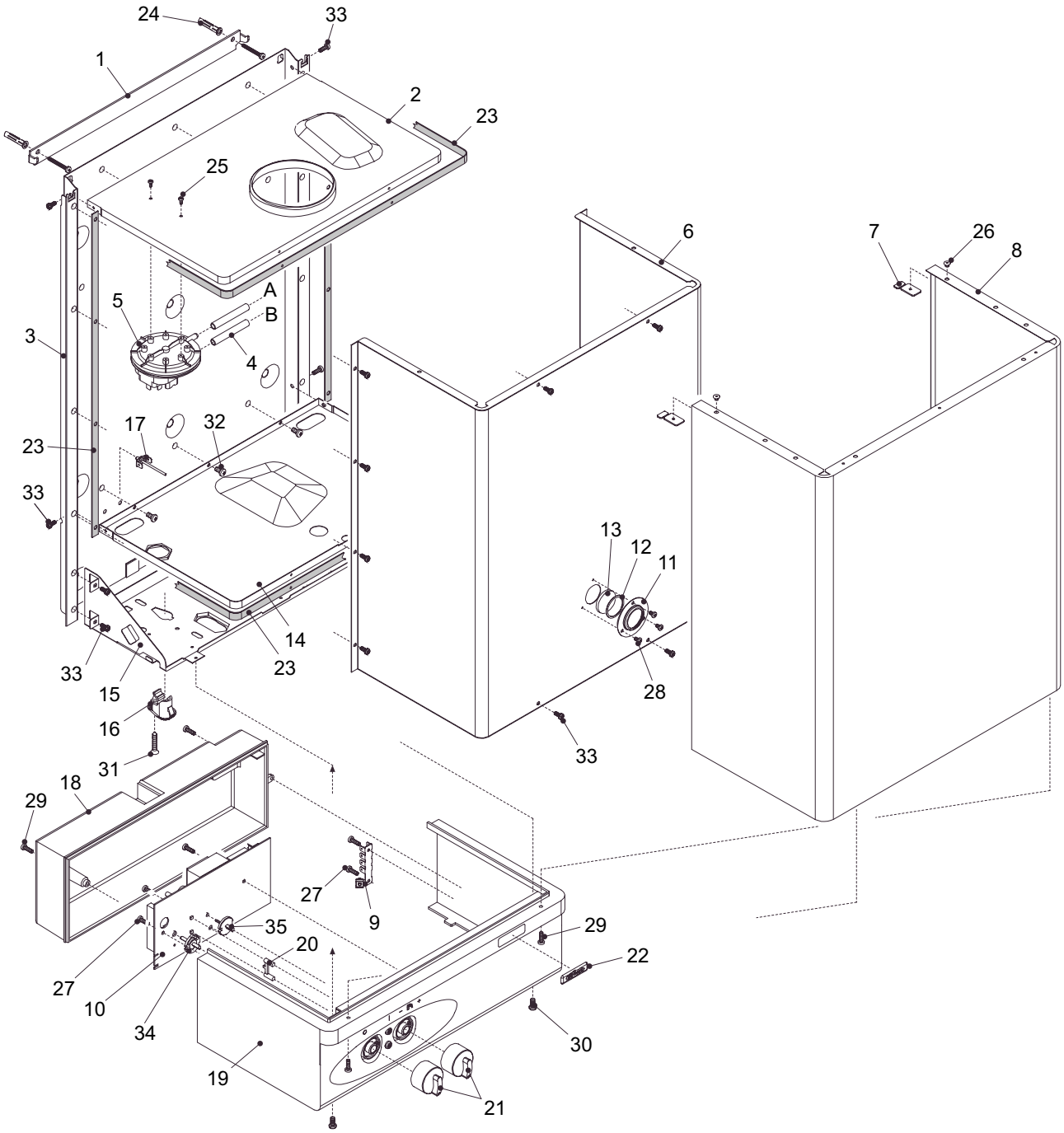

Pos	Description	Code	Pos	Description	Code
	Cable	10020688	18	PCB cover	10021120
1	Wall bracket	W7060407	19	Control panel	10021127
2	Air chamber top	10021131	20	Led lens	10020676
3	Back panel	W7050355	21	Selector/thermostat knob	10020674
4	Silicone tube	1457	22	Adhesive logo	1471
5	Pressure differential switch	10020890	23	Air chamber seal	W140
6	Air chamber front panel	W7050168	24	Wall plug	W98A
7	Casing clip	W7050260	25	Screw 6,5mm x 2,9mm	5077
8	White casing	10020679	26	Rivet 6mm x 3mm	W21M1
9	Earthing strip	10021230	27	Screw 12mm x 3,5mm	5240
10	PCB	10022491	28	Screw 6mm x 3,5mm	W127G
11	Sight glass retaining ring	W7050216	29	Screw 13mm x 3,9mm	W113A
12	Sight glass seal	W7050217	30	Screw 13mm x 4,8mm	W242D1
13	Sight glass	W131A	31	Screw 25mm x 4,8mm	5171
14	Air chamber bottom	10020661	32	Screw 7mm x 4,8mm	W74N
15	Lower panel	10020663	33	Screw 9mm x 3,9mm	W1110249
16	Cable entry socket	5371	34	Nylon shaft	10020669
17	Rivet	5037	35	Nylon shaft	10020670

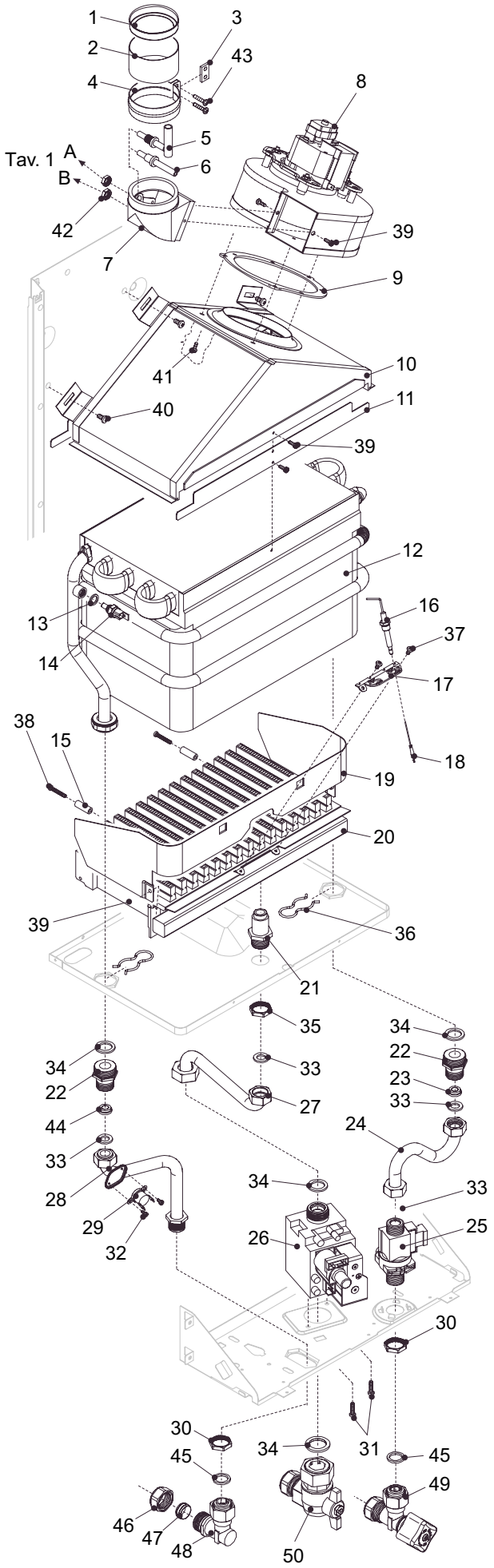

Pos	Description	Code
1	Exhaust restrictor ring	W7060504
2	60mm pipe	W7050062
3	Gasket	5917
4	Clip	5916
5	Negative venturi	W7050163
6	Positive venturi	W7050164
7	Fan to flue connector	6228
8	Fan to flue connector	W7080191
9	Fan gasket	W92A
10	Flue hood	W7040039
11	Flange	W7040056
12	Heat exchanger	10021367
13	Washer	5041
14	NTC thermistor	8484
15	Coupling	W7020437
16	Electrode	W7080195
17	Securing plate	W7020355
18	Lead	10021817
19	Combustion cover	W7030107
20	Burner (natural gas)	W7020403
20	Burner (LPG)	W7020404
21	Burner coupling	W7020416
22	Nipple	10020668
23	Flow restrictor	9430
24	Inlet pipe	10020666
25	DHW flow switch	10020330
26	Gas valve	10021021
27	Gas valve outlet pipe	10020667
28	Outlet pipe	10020664
29	High limit thermostat	10021235
30	1/2” bsp locknut	4274
31	Screw M4 x 7mm	5086
32	Screw 6,5mm x 2,9mm	5077
33	Fibre washer	5026
34	Fibre washer	5023
35	1/2” bsp locknut	W5C170
36	Spring clip	W7010223
37	Screw 6mm x 3,5mm	W127G
38	Screw 38mm x 4,2mm	10021765
39	Screw 9mm x 4,2mm	W165
40	Screw 7mm x 4,8mm	W74N
41	Screw 9,5mm x 3,9mm	W95A
42	1/8” bsp locknut	4807
43	Screw 3,9mm x 19mm	W114A
44	Flow restrictor	1466

SECTION 10 L.P.G. INSTRUCTIONS

For details of converting an appliance to LPG please refer to the instructions supplied with the relevant conversion kit.

10.1 TECHNICAL DATA

Inlet pressure (LPG)	37 mbar
Maximum burner pressure	36 mbar
Minimum burner pressure	3,0 mbar
Gas rate	1,33m^3/h
Injector size	15 x 0,77mm

10.2 RELATED DOCUMENTS

BS 5440	**PART 2**	**FLUES**
BS 5440	**PART 1**	**FLUES & VENTILATION**
BS 5546		**INSTALLATION OF GAS HOT WATER SUPPLIES FOR DOMESTIC PURPOSES**
BS 6891		**LOW PRESSURE INSTALLATION PIPES**
BS 5482	**PART 1**	**DOMESTIC BUTANE & PROPANE GAS BURNERS IN PERMAMENT DWELLINGS**

10.3 GAS SUPPLY

The gas supply must be connected to the appliance by a competent LPG installer and must be of sufficient size to supply the appliance at its maximum output.

An existing supply must be checked to ensure that it is of adequate size to deal with the maximum rated input of this and any other appliances that it serves.

10.4 GAS SUPPLY INSTALLATION

The entire installation, including the meter, must be purged and checked for gas soundness.

10.5 CHECKING AND ADJUSTING BURNER PRESSURE (see fig. 17)

Although the burner pressure is factory set, it is necessary to check it during servicing or if the gas valve has been removed. Isolate the appliance from the electrical supply and attach a suitable manometer to the gas valve outlet test nipple. Remove the compensator tube.

10.5.1 SETTING THE MAXIMUM BURNER PRESSURE

Light the appliance as described in 5.6 and compare the reading on the manometer with the value described in 2.2. If adjustement is required, remove the protective cap from the gas valve modulating coil assembly and turn the outer (10mm) nut clockwise to increase, or counter-clockwise to decrease the burner pressure.

NOTE

You should ensure that one or two outlets are open during the above procedure. This will ensure that the output of the appliance (burner pressure) is not compromised due to a high outlet temperature.

10.5.2 SETTING THE MINIMUM BURNER PRESSURE

Once the maximum burner pressure has been checked and/or adjusted, remove one of the grey wires from the modulating coil. Compare the reading on the manometer with the value described in 2.2. If adjustement is required, turn the inner (red) cross-head screw clockwise to increase, or counter-clockwise to decrease the burner pressure, whilst ensuring that the outer (10mm) nut does not move. When checking and/ or adjustement has been completed, isolate the appliance from the electrical supply, replace the protective cap, refit the compensator tube, refit the grey wire to the modulating coil, remove the manometer, and tighten the outlet test nipple.

IMPORTANT, A GAS SOUNDNESS CHECK MUST BE CARRIED OUT.

Vokèra
heating for life

Cod. 10022230 - 18/04 - Ed. 1

Registered address:
Vokèra Ltd
Borderlake House
Unit 7 Riverside Industrial Estate
London Colney
Herts AL2 1HG

enquiries@vokera.co.uk

www.vokera.co.uk
www.vokera.ie

Sales, General Enquires
T 0844 391 0999
F 0844 391 0998

Vokèra Ireland
West Court, Callan
Co Kilkenny
T 056 7755057
F 056 7755060

Vokèra Limited reserve the right to change
specification without prior notice
Consumers statutory rights are not affected.

A Riello Group Company.
Company Reg No: 1047779