spares & parts online
IBASIS.co.uk©

Vokèra
heating for life

Compact HE

High efficiency combi boiler

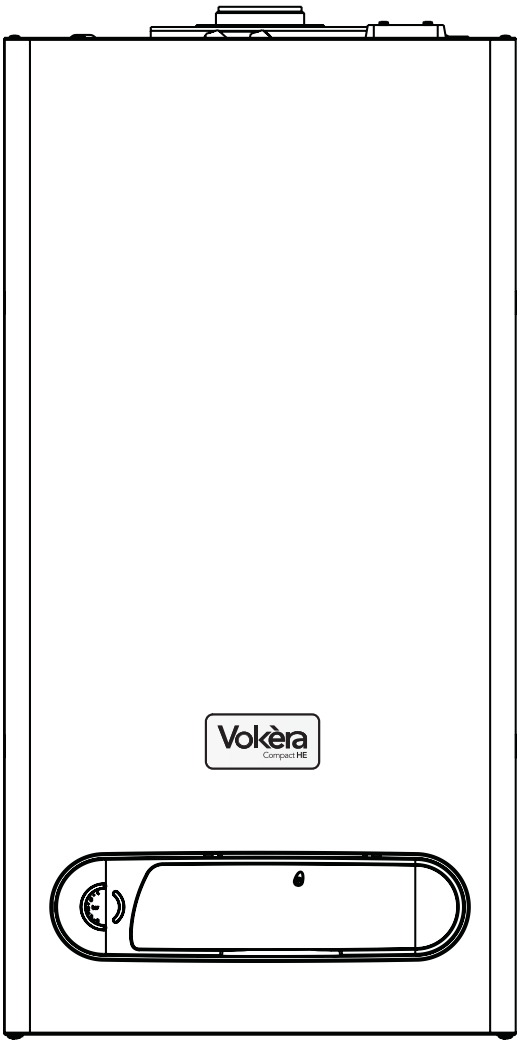

Installation
& Servicing
Instructions

CE

THESE INSTRUCTIONS
TO BE RETAINED
BY USER

benchmark
COLLECTIVE MARK
THE MARK OF QUALITY FOR THE INSTALLATION, COMMISSIONING AND SERVICING OF DOMESTIC HEATING AND HOT WATER SYSTEMS

Vokèra is a licensed member of the Benchmark scheme which aims to improve the standards of installation and commissioning of domestic hot water systems in the UK.

Contents

Design principles and operating sequence		Page
1.1	Principle components	2
1.2	Mode of operation (at rest)	2
1.3	Mode of operation (heating)	2
1.4	Mode of operation (DHW)	2
1.5	Safety devices	2

Technical data		Page
2.1	Central heating	3
2.2	Domestic hot water	3
2.3	Gas pressure	3
2.4	Expansion vessel	3
2.5	Dimensions	3
2.6	Clearances	3
2.7	Connections	3
2.8	Electrical	3
2.9	Flue details	3
2.10	Efficiency	3
2.11	Pump duty	4
2.12	Appliance	4

General requirements (UK)		Page
3.1	Related documents	5
3.2	Location of appliance	5
3.3	Gas supply	5
3.4	Flue system	5
3.5	Air supply	5
3.6	Water circulation	5
3.6.1	Pipework	6
3.6.2	Automatic by-pass	6
3.6.3	Drain cocks	6
3.6.4	Air release points	6
3.6.5	Expansion vessel	6
3.6.6	Filling point	6
3.6.7	Low pressure sealed system	6
3.6.8	Frequent filling	6
3.7	Electrical supply	6
3.8	Showers	6
3.9	Mounting on a combustible surface	7
3.10	Timber framed building	7
3.11	Inhibitors	7

General requirements (EIRE)		Page
3.A1	Related documents	8
3.A2	Location of appliance	8
3.A3	Gas supply	8
3.A4	Flue system	8
3.A5	Air supply	8
3.A6	Water circulation	8
3.A6.1	Pipework	8
3.A6.2	Automatic by-pass	8
3.A6.3	Drain cocks	8
3.A6.4	Air release points	8
3.A6.5	Expansion vessel	8
3.A6.6	Filling point	9
3.A6.7	Low pressure sealed system	9
3.A6.8	Frequent filling	9
3.A7	Electrical supply	9
3.A8	Showers	9
3.A9	Mounting on a combustible surface	9
3.A10	Timber framed building	9
3.A11	Inhibitors	9
3.A12	Declaration of conformity	9

Installation		Page
4.1	Delivery	10
4.2	Contents	10
4.3	Unpacking	10
4.4	Preparation for mounting the appliance	10
4.5	Fitting the flue	10
4.5.1	Concentric horizontal flue	10
4.5.2	Concentric vertical flue	11
4.5.3	Twin flue system	12
4.6	Connecting the gas and water	14
4.6.1	Gas	14
4.6.2	Flow and return	14
4.6.3	Cold water inlet	14
4.6.4	Hot water outlet	14
4.6.5	Safety valve	14
4.6.6	Condense pipe	14
4.7	Electrical connections	14
4.7.1	Casing removal	15
4.7.2	Appliance terminal block	15
4.7.3	Connecting the mains (230V) input	15

Commissioning		Page
5.1	Gas supply installation	16
5.2	The heating system	16
5.3	Initial filling of the system	16
5.4	Initial flushing	16
5.5	Filling the hot water system	16
5.6	Pre-operation checks	16
5.7	Initial lighting	16
5.7.1	Checking burner pressures	16
5.8	Final flushing of the heating system	16
5.8.1	Inhibtors	16
5.9	Setting the boiler operating temperature	16
5.9.1	Setting the DHW temperature	17
5.10	Setting the system design pressure	17
5.11	Regulating the hot water	17
5.11.1	Changing the flow restrictor	17
5.11.2	Regulating the central heating system	17
5.12	Final checks	17
5.13	Instructing the user	17

Servicing instructions		Page
6.1	General	18
6.2	Routine annual servicing	18
6.3	Replacement of components	18
6.4	Component removal procedure	18
6.5	Pump assembly	18
6.6	Safety valve	18
6.7	Automatic air release valve	19
6.8	Water pressure switch	19
6.9	Pressure gauge	19
6.10	Primary thermistor	19
6.11	High limit thermostat	19
6.12	PCB	19
6.13	Gas valve	19
6.14	Integral time switch	20
6.15	Electrode, burner thermostat, burner & injectors	20
6.16	Flue fan	21
6.17	Main heat exchanger	21
6.18	Air pressure switch	21
6.19	Flow restrictor	21
6.20	DHW flow switch	22
6.21	DHW heat exchanger	22
6.22	Valve actuator	22
6.23	Divertor valve cartridge	22
6.24	DHW thermistor	22
6.25	Automatic by-pass	22
6.26	DHW non-return valve	22
6.27	Expansion vessel	22
6.27.1	Expansion vessel removal (with sufficient clearance above)	22
6.27.2	Expansion vessel removal (with insufficient clearance above)	23
6.28.1	Latent heat collector	23
6.28.2	Dismantling the latent heat collector	23
6.28.3	Retarder	23
6.29	Condense trap removal	24

Checks, adjustments and fault finding		page
7.1	Checking appliance operation	24
7.2	Appliance mode of operation	24
7.2.1	Selector switch in the OFF position	24
7.2.2	Selector switch in the hot water only position	24
7.2.3	Selector switch in the heating & hot water position	24
7.2.4	Appliance functions	24
7.2.5	DHW mode	24
7.2.6	Heating mode	25
7.3	Checking & adjusting burner pressure	26
7.3.1	Setting the maximum burner pressure	26
7.3.2	Setting the minimum burner pressure	26
7.3.3	Setting the minimum CH output	26
7.4	Combustion analysis test	26
7.5	Checking the expansion vessel	27
7.6	External faults	27
7.6.1	Installation faults	27
7.7	Electrical checks	27
7.7.1	Earth continuity test	27
7.7.2	Short circuit check	27
7.7.3	Polarity check	27
7.7.4	Reversed polarity or supply fault	28
7.7.5	Resistance to earth check	28
7.8	Fault finding	28
7.8.1	Replacing the main PCB	28
7.9	Fault codes	28
7.10	Fault finding	29-34

Wiring diagrams		Page
8.1	External wiring	35
8.2	Typical control applications	35
8.3	Vokera remote control	35
8.4	Room thermostat	35
8.5	Other controls	35
Functional diagram		36

Exploded diagrams		Page
Table 1-5		37-41

L.P.G. instructions		Page
10.1	Related documents	42
10.2	Technical data	42
10.3	Converting the appliance gas supply	42
10.4	Gas supply	42
10.5	Gas supply installation	42
10.6	Checking & adjusting burner pressure	42
10.6.1	Setting the maximum burner pressure	42
10.6.2	Setting the minimum burner pressure	42

INTRODUCTION

The Compact HE range of appliances is comprised of 2 models of high-efficiency combination boiler with inputs to heating & DHW of 25, 29 & 35kW respectively. Each appliance - by design - incorporates electronic ignition, circulating pump, expansion vessel, safety valve, pressure gauge, and automatic by-pass.

The Compact HE range is produced as room sealed, category II2H3P appliances, suitable for internal wall mounting applications only. They are provided with a fan powered flue outlet with an annular coaxial combustion air intake that can be rotated - horizontally - through 360 degrees for various horizontal or vertical applications. The Compact HE range can also be used with the Vokera twin flue system.
The Compact HE range is approved for use with C12 & C32 type flue applications.
These appliances are designed for use with a sealed system only; consequently they are not intended for use on open vented systems

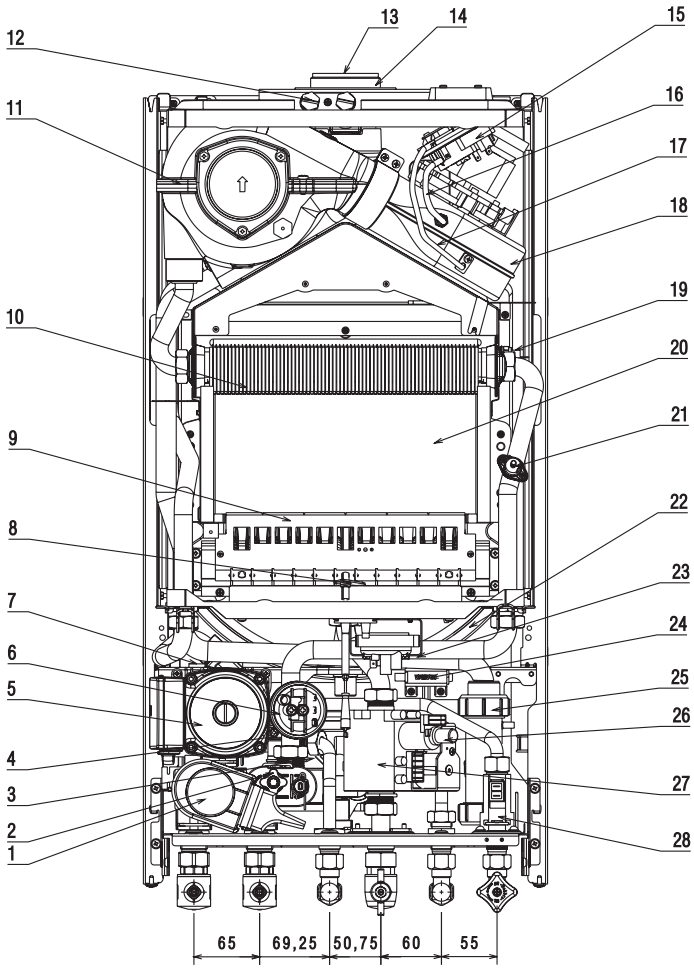

Fig. 1

Fig.1 General Layout

1 Diverter valve motor
2 Discharge valve
3 Domestic hot water heat exchanger
4 Safety valve
5 Pump
6 Pressure switch
7 Auto air vent (AAV)
8 Electrode
9 Main burner
10 Main heat exchanger
11 Latent heat collector
12 Flue gas analysis test point
13 Flue outlet
14 Air intake
15 Differential pressure switch
16 Silicone pressure tube (-)
17 Silicone pressure tube (+)
18 Fan assembly
19 CH NTC sensor
20 Combustion chamber
21 High limit thermostat
22 Expansion vessel
23 Condensate pressure switch
24 Ignition transformer
25 Condense trap
26 Modulator coil
27 Gas valve
28 DHW flow switch

29 Pressure gauge
30 DHW temperature selector
31 Mode selector switch
32 Status fault/indicator led
33 CH temperature selector
34 Timeclock

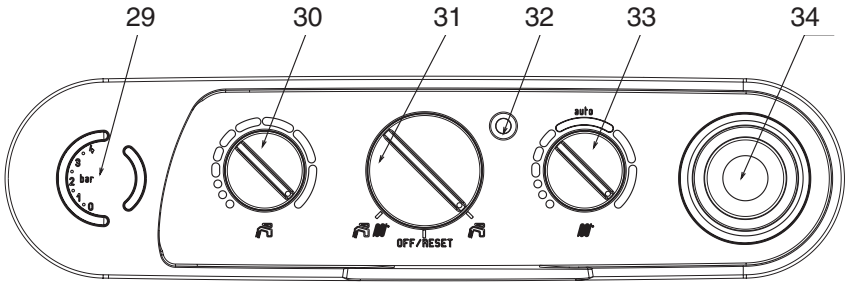

1.1 PRINCIPLE COMPONENTS

- A fully integrated electronic control board featuring electronic temperature control, anti-cycle control, pump over-run, LED fault indicator, full gas modulation.
- Low-water-content, copper heat exchanger.
- Electronic ignition with flame supervision.
- Integral high-head pump.
- Fan.
- Air pressure switch.
- Expansion vessel.
- Water pressure switch.
- Two-stage gas valve.
- Pressure gauge.
- Safety valve.
- Condense switch.

1.2 MODE OF OPERATION (at rest)

When the appliance is at rest and there are no requests for heating or DHW, the following functions are active:

- Frost-protection system - the frost-protection system protects the appliance against the risk of frost damage. Should the temperature of the appliance fall to 5 °C, the boiler will function in the heating mode at minimum power until it reaches 35 °C.
- Anti-block function - the anti-block function enables the pump and divertor valve actuator, to be energised for short periods, when the appliance has been inactive for more than 19-hours.

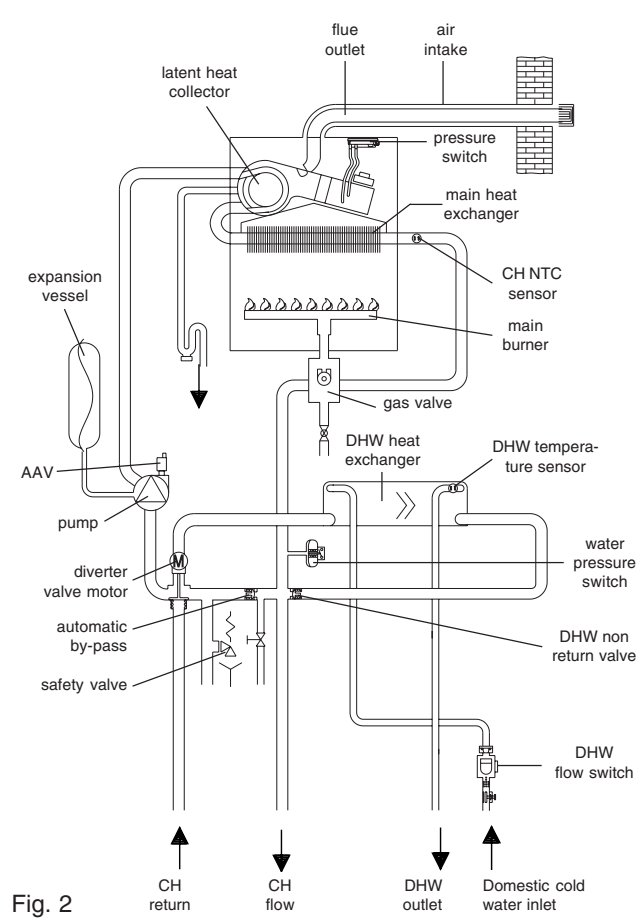

Fig. 2

1.3 MODE OF OPERATION (Heating)

When there is a request for heat via the time clock and/or any external control, the pump and fan are started, the fan will then prove the air pressure switch. At this point an ignition sequence is enabled.

Ignition is sensed by the electronic circuitry to ensure flame stability at the burner. Once successful ignition has been achieved, the electronic circuitry increases the gas rate to 75% for a period of 15 minutes. Thereafter, the boiler's output will either be increase to maximum or modulate to suit the set requirement.

When the appliance reaches the desired temperature the burner will shut down and the boiler will perform a three-minute anti-cycle (timer delay).

When the request for heat has been satisfied the appliance pump and fan may continue to operate to dissipate any residual heat within the appliance.

1.4 MODE OF OPERATION (DHW)

When there is a request for DHW via a hot water outlet or tap, the pump and fan are started, the fan will then prove the air pressure switch. At this point an ignition sequence is enabled.

Ignition is sensed by the electronic circuitry to ensure flame stability at the burner. Once successful ignition has been achieved, the electronic circuitry increases the gas rate to maximum or will modulate output to stabilise the temperature.

In the event of the appliance exceeding the desired temperature the burner will shut down until the temperature drops.

When the request for DHW has been satisfied the appliance pump and fan may continue to operate to dissipate any residual heat within the appliance.

1.5 SAFETY DEVICES

When the appliance is in use, safe operation is ensured by:

- A water pressure switch that monitors system water pressure and will de-activate the pump, fan and burner should the system water pressure drop below the rated tolerance.
- A high limit thermostat that over-rides the temperature control circuit to prevent or interrupt the operation of the burner.
- An air pressure switch that requires the fan to prove operation before the gas valve is energised.
- A pressure switch that interrupts the operation of the appliance if the condense pipe becomes blocked.
- A safety valve which releases excess pressure from the primary circuit.

SECTION 2 TECHNICAL DATA

	25 HE	29 HE	35 HE
2.1 Central heating			
Heat input (kW)	25.0	29.0	34.8
Maximum heat output @ 80/60 °C (kW)	24.3	28.1	33.8
Minimum heat output @ 80/60 °C (kW)	14.2	14.2	13.9
Maximum heat output @ 50/30 °C (kW)	25.9	30.2	36.1
Minimum heat output @ 50/30 °C (kW)	14.9	14.8	14.4
Minimum working pressure	0.5 bar	0.5 bar	0.5 bar
Maximum working pressure	3.0 bar	3.0 bar	3.0 bar
Minimum flow rate	350 l/h	350 l/h	350 l/h
2.2 Domestic hot water			
Maximum output (kW)	25.0	29.0	34.8
Minimum output (kW)	9.5	9.9	9.9
Flow rate (35 °C rise)	10.2 l/min	11.9 l/min	14.3 l/min
Maximum inlet pressure	6.0 bar	6.0 bar	6.0 bar
Minimum inlet working pressure	0.15 bar	0.15 bar	0.15 bar
Minimum flow rate	2 l/min.	2 l/min.	2 l/min.
2.3 Gas pressures			
Inlet pressure G20	20.0 mbar	20.0 mbar	20.0 mbar
Maximum burner pressure	9.40 mbar	9.20 mbar	10.1 mbar
Minimum burner pressure (central heating)	3.50 mbar	2.70 mbar	2.10 mbar
Minimum burner pressure (domestic hot water)	1.50 mbar	1.20 mbar	1.00 mbar
Gross rate (central haeting, max - min)	2.64 - 1.59 m^3/h	3.07 - 1.59 m^3/h	3.68 - 1.59 m^3/h
Injectors size	12 x 1.35 mm	14 x 1.35 mm	16 x 1.35 mm
2.4 Expansion vessel			
Capacity	8 litres	10 litres	10 litres
Maximum system volume	76 litres	76 litres	76 litres
Pre-charge pressure	1.0 bar	1.0 bar	1.0 bar
2.5 Dimensions			
Height	780 mm	780 mm	780 mm
Width	400 mm	450 mm	500 mm
Depth	332 mm	332 mm	332 mm
Dry weight	40 kg	44 kg	48 kg
2.6 Clearances			
Sides	12 mm	12 mm	12 mm
Top	150 mm from casing or 25 mm above flue elbow, wh	chever is applicable	
Bottom	150 mm	150 mm	150 mm
Front	600 mm	600 mm	600 mm
2.7 Connections			
Flow & return	22 mm	22 mm	22 mm
Hot & cold water connections	15 mm	15 mm	15 mm
Gas	15 mm	15 mm	15 mm
Safety valve	15 mm	15 mm	15 mm
Condense	21 mm	21 mm	21 mm
2.8 Electrical			
Voltage	230V/~ 50Hz	230V/~ 50Hz	230V/~ 50Hz
Power consumption	153 W	153 W	153 W
Internal fuse	2 A	2 A	2 A
External fuse	3 A	3 A	3 A
2.9 Flue details (concentric)			
Maximum horizontal flue length (60/100mm)	4.5 m	4.0 m	1.85 m
Maximum vertical flue length (60/100mm)	5.5 m	5.0 m	2.85 m
Maximum horizontal flue length (80/125mm)	11.0 m	9.0 m	6.8 m
Maximum vertical flue length (80/125mm)	12.0 m	10.0 m	7.8 m
2.9 Flue details (twin pipe)			
Maximum horizontal flue length (80mm + 80mm)	20 m + 20 m	12 m + 12 m	10 m + 10 m
Maximum vertical flue length (80mm + 80mm)	20 m + 20 m	12 m + 12 m	10 m + 10 m
2.10 Efficiency			
SEDBUK	86.9 Band “B”	87.1 Band “B”	86.65 Band “B”

Ref. Condition 15 °C , 1013,25 mbar, dry gas
NOTE: L.P.G. data refer to section 10

2.11 PUMP DUTY

Fig. 3 shows the flow rate available - after allowing for pressure loss through the appliance - for system requirements. When using this graph, apply only the pressure loss of the system. The graph is based on a 20 ºC temperature differential.

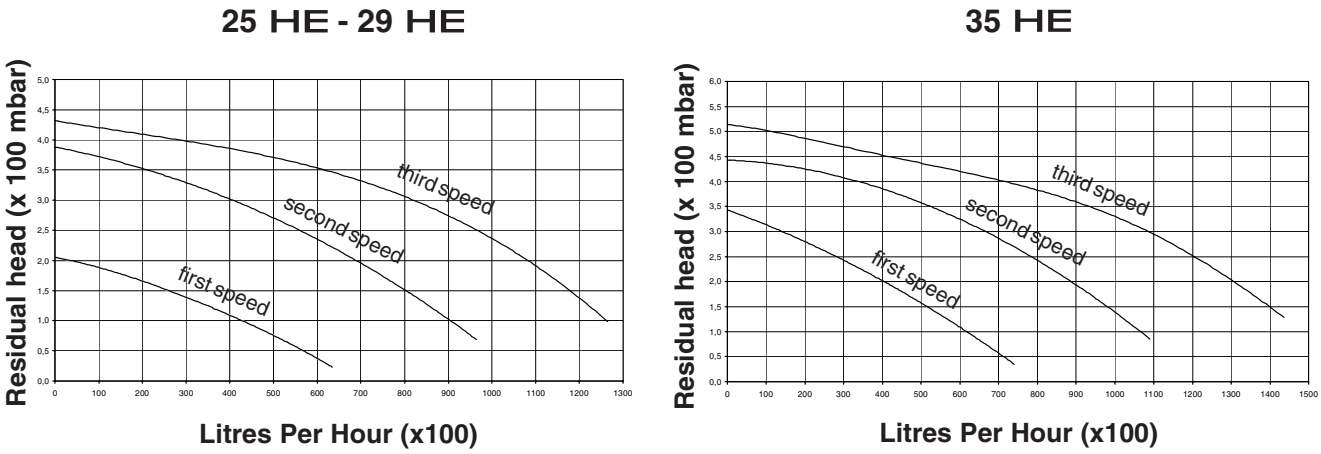

Fig. 3

	25 HE	29 HE	35 HE
2.12 Appliance			
NOx	98 ppm - 172 mg/kWh	81 ppm - 142 mg/kWh	85 ppm - 149 mg/kWh
CO (max-min)	80 ppm - 80 ppm	100 ppm - 60 ppm	100 ppm - 120 ppm
CO_2 (max-min)	6.75 - 3.90 %	7.05 - 3.40 %	6.8 - 2.7 %
CO/CO_2 ratio (max)	0.001 to 1	0.001 to 1	0.001 to 1
CO/CO_2 ratio (min)	0.002 to 1	0.001 to 1	0.004 to 1

SECTION 3 GENERAL REQUIREMENTS (UK)

Fig. 4

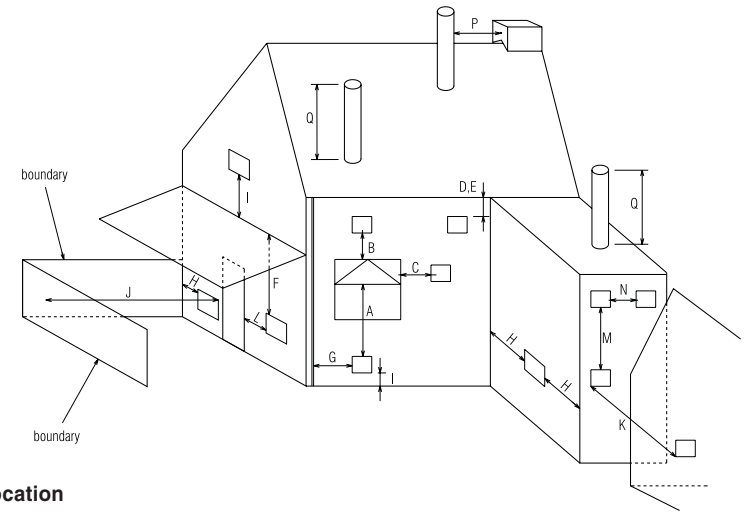

Key	Location	Minimum distance
A	Below an opening (window, air-brick, etc.)	300 mm
B	Above an opening (window, air-brick, etc.)	300 mm
C	To the side of an opening (window, air-brick, etc.)	300 mm
D	Below gutter, drain-pipe, etc.	75 mm
E	Below eaves	200 mm
F	Below balcony, car-port roof, etc.	1200 mm
G	To the side of a soil/drain-pipe, etc.	150 mm
H	From internal/external corner or boundary	300 mm
I	Above ground, roof, or balcony level	300 mm
J	From a surface or boundary facing the terminal	1200 mm
K	From a terminal facing a terminal	1200 mm
L	From an opening in the car-port into the building	1200 mm
M	Vertically from a terminal on the same wall	1500 mm
N	Horizontally from a terminal on the same wall	300 mm
P	From a structure to the side of the vertical terminal	500 mm
Q	From the top of the vertical terminal to the roof flashing	As determined by the fixed collar of the vertical terminal

This appliance must be installed by a competent person in accordance with the Gas Safety (Installation & Use) Regulations.

3.1 RELATED DOCUMENTS

The installation of this boiler must be in accordance with the relevant requirements of the Gas Safety (Installation & Use) Regulations, the local building regulations, the current I.E.E. wiring regulations, the bylaws of the local water undertaking, the Building Standards (Scotland) Regulation and Building Standards (Northern Ireland) Regulations.

It should be in accordance also with any relevant requirements of the local authority and the relevant recommendations of the following British Standard Codes of Practice.

3.2 LOCATION OF APPLIANCE

The appliance may be installed in any room or internal space, although particular attention is drawn to the requirements of the current I.E.E. wiring regulations, and in Scotland, the electrical provisions of the Building Regulations, with respect to the installation of the appliance in a room or internal space containing a bath or shower.

3.3 GAS SUPPLY

The gas meter – as supplied by the gas supplier – must be checked to ensure that it is of adequate size to deal with the maximum rated input of all the appliances that it serves. Installation pipes must be fitted in accordance with BS 6891.

Pipe work from the meter to the appliance must be of adequate size. Pipes of a smaller size than the appliance gas inlet connection must not be used. The installation must be tested for soundness in accordance with BS6891.

If the gas supply serves more than one appliance, it must be ensured that an adequate supply is maintained to each appliance when they are in use at the same time.

3.4 FLUE SYSTEM

The terminal should be located where the dispersal of combustion products is not impeded and with due regard for the damage and discoloration that may occur to building products located nearby. The terminal must not be located in a place where it is likely to cause a nuisance (see fig. 4).

Water vapour will condense on leaving the terminal and the effect of such pluming must be considered.

BS 5440	PART 1	FLUES
BS 5440	PART 2	FLUES & VENTILATION
BS 5449	PART 1	FORCED CIRCULATION HOT WATER SYSTEMS
BS 5546		INSTALLATION OF GAS HOT WATER SUPPLIES FOR DOMESTIC PURPOSES (2ND FAMILY GASES)
BS 6798		INSTALLATION OF BOILERS OF RATED INPUT NOT EXCEEDING 60kW
BS 6891		LOW PRESSURE INSTALLATION PIPES
BS 7074	PART 1	APPLICATION, SELECTION AND INSTALLATION OF EXPANSION VESSELS AND ANCILLARY EQUIPMENT FOR SEALED WATER SYSTEMS

When an appliance is installed in a room or internal space containing a bath or shower, the appliance or any control pertaining to it must not be within reach of a person using the bath or shower.

The location chosen for the appliance must permit the provision of a safe and satisfactory flue and termination. The location must also permit an adequate air supply for combustion purposes and an adequate space for servicing and air circulation around the appliance. Where the installation of the appliance will be in an unusual location special procedures may be necessary, BS 6798 gives detailed guidance on this aspect.

A compartment used to enclose the appliance must be designed and constructed specifically for this purpose. An existing compartment/cupboard may be utilised provided that it is modified to suit.

Details of essential features of compartment/cupboard design including airing cupboard installations are given in BS 6798. This appliance is not suitable for external installation.

If installed less than 2m above a pavement or platform to which people have access (including balconies or flat roofs) the terminal must be protected by a guard of durable material. The guard must be fitted centrally over the terminal. Refer to BS 5440 Part 1, when a terminal is sited less than 1m below a plastic gutter, or less than 500mm below a painted surface, a suitable one metre long heat shield should be fitted.

3.5 AIR SUPPLY

The following notes are intended for general guidance only.

This appliance is a room-sealed, fan-flued boiler, consequently it does not require a permanent air vent for combustion air supply.

When installed in a cupboard or compartment, ventilation for cooling purposes is also not required.

3.6 WATER CIRCULATION

Detailed recommendations are given in BS 5449 Part 1 and BS 6798. The following notes are for general guidance only.

3.6.1 PIPEWORK

It is recommended that copper tubing to BS 2871 Part 1 is used in conjunction with soldered capillary joints.

Where possible pipes should have a gradient to ensure air is carried naturally to air release points and that water flows naturally to drain cocks.

Except where providing useful heat, pipes should be insulated to avoid heat loss and in particular to avoid the possibility of freezing. Particular attention should be paid to pipes passing through ventilated areas such as under floors, loft space, and void areas.

3.6.2 AUTOMATIC BY-PASS

The appliance has a built-in automatic by-pass. However it may be necessary to fit an external bypass should the design of the heating system require such. In any case, the design of the system should be such that it prevents boiler 'cycling'.

3.6.3 DRAIN COCKS

These must be located in accessible positions to facilitate draining of the appliance and all water pipes connected to the appliance. The drain cocks must be manufactured in accordance with BS 2879.

3.6.4 AIR RELEASE POINTS

These must be positioned at the highest points in the system where air is likely to be trapped. They should be used to expel trapped air and allow complete filling of the system.

3.6.5 EXPANSION VESSEL

The appliance has an integral expansion vessel to accommodate the increased volume of water when the system is heated. It can accept up to 8 litres (25kW) or 10 litres (29 & 35kW) of expansion from within the system, generally this is sufficient, however if the system has an unusually high water content, it may be necessary to provide additional expansion capacity (see 6.19).

3.6.6 FILLING POINT

An approved method for initial filling of the system and replacing water lost during servicing etc. is required (see fig. 5). This method of filling must comply with the current Water Supply (Water Fittings) Regulations 1999 and Water Bylaws 2000 (Scotland).

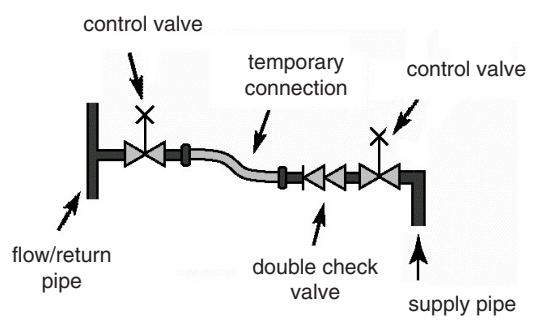

Fig. 5

3.6.7 LOW PRESSURE SEALED SYSTEM

An alternative method of filling the system would be from an independent make-up vessel or tank mounted in a position at least 1 metre above the highest point in the system and at least 5 metres above the boiler (see fig. 5a).

The cold feed from the make-up vessel or tank must be fitted with an approved non-return valve and stopcock for isolation purposes. The feed pipe should be connected to the return pipe as close to the boiler as possible.

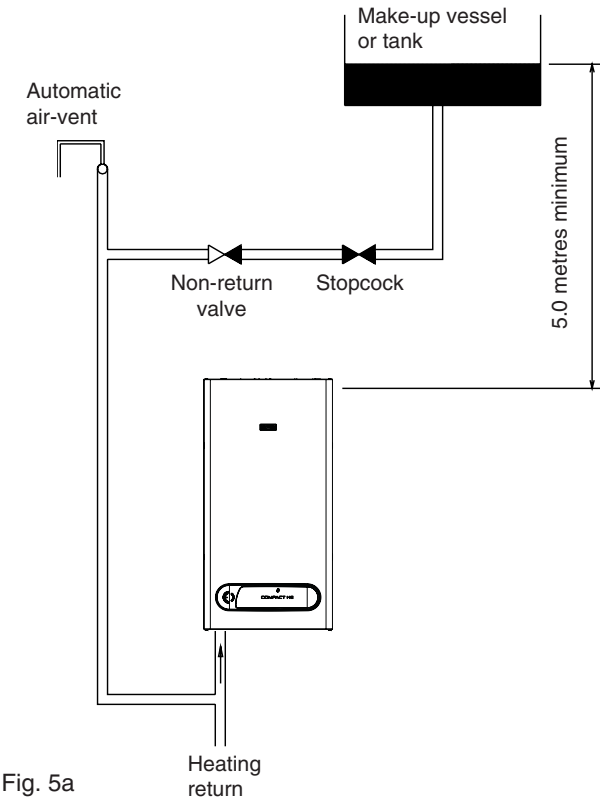

Fig. 5a

3.6.8 FREQUENT FILLING

Frequent filling or venting of the system may be indicative of a leak. Care should be taken during the installation of the appliance to ensure all aspects of the system are capable of withstanding pressures up to at least 3 bar.

3.7 ELECTRICAL SUPPLY

The appliance is supplied for operation on 230V @ 50Hz electrical supply; it must be protected with a 3-amp fuse. The method of connection to the mains electricity supply must allow for complete isolation from the supply. The preferred method is by using a double-pole switch with a contact separation of at least 3mm. The switch must only supply the appliance and its corresponding controls, i.e. time clock, room thermostat, etc. Alternatively an un-switched shuttered socket with a fused 3-pin plug both complying with BS 1363 is acceptable.

3.8 SHOWERS

If the appliance is intended for use with a shower, the shower must be thermostatically controlled and be suitable for use with a combination boiler.

3.9 MOUNTING ON A COMBUSTIBLE SURFACE

If the appliance is to be fitted on a wall of combustible material, a sheet of fireproof material must protect the wall.

3.10 TIMBER FRAMED BUILDING

If the appliance is to be fitted in a timber framed building, it should be fitted in accordance with the Institute of Gas Engineers publication (IGE/UP/7) 'Guide for Gas Installations in Timber Frame Buildings'.

3.11 INHIBITORS

Vokera recommend that an inhibitor - suitable for use with copper and aluminium heat exchangers - is used to protect the boiler and system from the effects of corrosion and/or electrolytic action. The inhibitor must be administered in strict accordance with the manufacturers instructions*.

*Water treatment of the complete heating system - including the boiler - should be carried out in accordance with BS 7593 and the Domestic Water Treatment Association's (DWTA) code of practice.

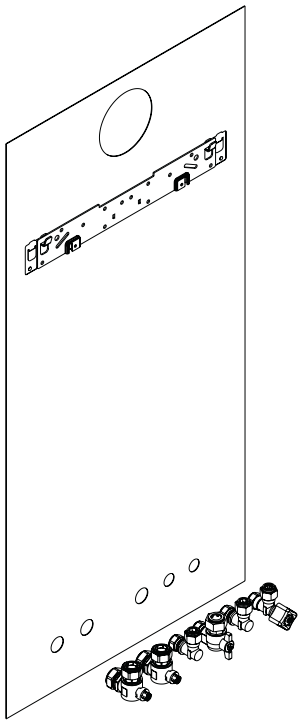

Fig. 6a

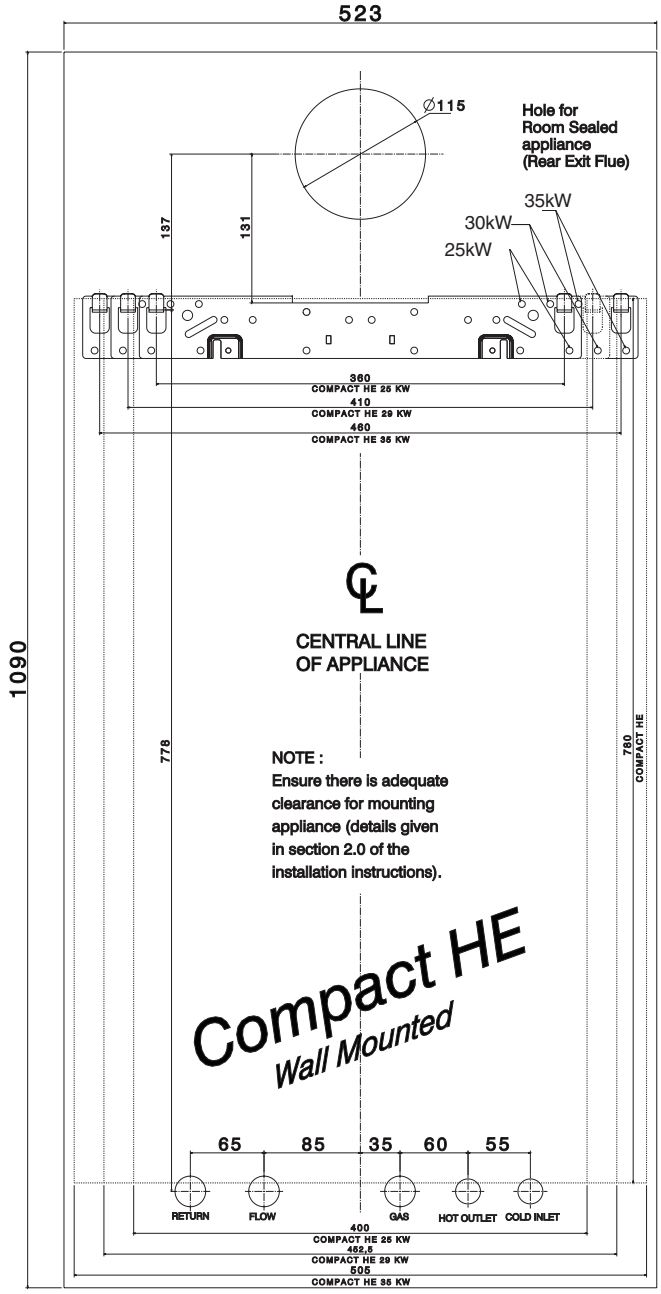

Fig. 6

This appliance must be installed by a competent person in accordance with and defined by, the Standard Specification (Domestic Gas Installations) Declaration (I.S. 813).

3A.1 RELATED DOCUMENTS

The installation of this boiler must be in accordance with the relevant requirements of the local building regulations, the current ETCI National Rules for Electrical Installations, and the bylaws of the local water undertaking.

It should be in accordance also with any relevant requirements of the local and/or district authority.

3A.2 LOCATION OF APPLIANCE

The appliance may be installed in any room or internal space, although particular attention is drawn to the requirements of the current ETCI National Rules for Electrical Installations, and I.S. 813, Annex K.

When an appliance is installed in a room or internal space containing a bath or shower, the appliance or any control pertaining to it must not be within reach of a person using the bath or shower.

The location chosen for the appliance must permit the provision of a safe and satisfactory flue and termination. The location must also permit an adequate air supply for combustion purposes and an adequate space for servicing and air circulation around the appliance. Where the installation of the appliance will be in an unusual location special procedures may be necessary, refer to I.S. 813 for detailed guidance on this aspect. A compartment used to enclose the appliance must be designed and constructed specifically for this purpose. An existing compartment/cupboard may be utilised provided that it is modified to suit.

This appliance is not suitable for external installation.

3A.3 GAS SUPPLY

The gas meter - as supplied by the gas supplier - must be checked to ensure that it is of adequate size to deal with the maximum rated input of all the appliances that it serves. Installation pipes must be fitted in accordance with I.S. 813.

Pipe work from the meter to the appliance must be of adequate size. Pipes of a smaller size than the appliance gas inlet connection must not be used. The installation must be tested for soundness in accordance with I.S. 813.

If the gas supply serves more than one appliance, it must be ensured that an adequate supply is maintained to each appliance when they are in use at the same time.

3A.4 FLUE SYSTEM

The terminal should be located where the dispersal of combustion products is not impeded and with due regard for the damage and discoloration that may occur to building products located nearby.

The terminal must not be located in a place where it is likely to cause a nuisance (refer to I.S. 813 for guidance on permitted locations and minimum distances of flue terminals).

Water vapour will condense on leaving the terminal; the effect of such pluming must be considered.

If installed less than 2m above a pavement or platform to which people have access (including balconies or flat roofs) the terminal must be protected by a guard of durable material. The guard must be fitted centrally over the terminal. Refer to I.S. 813, when the terminal is 0.5 metres (or less) below plastic guttering or 1 metre (or less) below painted eaves.

3A.5 AIR SUPPLY

The following notes are intended for general guidance only. This appliance is a room-sealed, fan-flued boiler, consequently it does not require a permanent air vent for combustion air supply.

When installed in a cupboard or compartment, ventilation for cooling purposes is also not required.

3A.6 WATER CIRCULATION

Specific recommendations are given in I.S. 813. The following notes are for general guidance only.

3A.6.1 PIPEWORK

It is recommended that copper tubing be used in conjunction with soldered capillary joints.

Where possible pipes should have a gradient to ensure air is carried naturally to air release points and that water flows naturally to drain cocks.

Except where providing useful heat, pipes should be insulated to avoid heat loss and in particular to avoid the possibility of freezing. Particular attention should be paid to pipes passing through ventilated areas such as under floors, loft space, and void areas.

3A.6.2 AUTOMATIC BY-PASS

The appliance has a built-in automatic by-pass. However it may be necessary to fit an external bypass should the design of the heating system require such. In any case, the design of the system should be such that it prevents boiler ‘cycling’.

3A.6.3 DRAIN COCKS

These must be located in accessible positions to facilitate draining of the appliance and all water pipes connected to the appliance.

3A.6.4 AIR RELEASE POINTS

These must be positioned at the highest points in the system where air is likely to be trapped. They should be used to expel trapped air and allow complete filling of the system.

3A.6.5 EXPANSION VESSEL

The appliance has an integral expansion vessel to accommodate the increased volume of water

when the system is heated. It can accept up to 8 litres (25kW) or 10 litres (29 & 35kW) of expansion from within the system, generally this is sufficient, however if the system has an unusually high water content, it may be necessary to provide additional expansion capacity (see 6.19).

3A.6.6 FILLING POINT

A suitable method for initial filling of the system and replacing water lost during servicing etc. is required (see fig. 5). You should ensure this method of filling complies with the local water authority regulations.

3A.6.7 LOW PRESSURE SEALED SYSTEM

An alternative method of filling the system would be from an independent make-up vessel or tank mounted in a position at least 1 metre above the highest point in the system and at least 5 metres above the boiler (see fig. 5A).

The cold feed from the make-up vessel or tank must be fitted with an approved non-return valve and stopcock for isolation purposes. The feed pipe should be connected to the return pipe as close to the boiler as possible.

3A.6.8 FREQUENT FILLING

Frequent filling or venting of the system may be indicative of a leak. Care should be taken during the installation of the appliance to ensure all aspects of the system are capable of withstanding pressures up to at least 3 bar.

3A.7 ELECTRICAL SUPPLY

The appliance is supplied for operation on 230V @ 50Hz electrical supply; it must be protected with a 3-amp fuse. The method of connection to the mains electricity supply must allow for complete isolation from the supply. The preferred method is by using a double-pole switch with a contact separation of at least 3mm. The switch must only supply the appliance and its corresponding controls, i.e. time clock, room thermostat, etc.

3A.8 SHOWERS

If the appliance is intended for use with a shower, the shower must be thermostatically controlled and be suitable for use with a combination boiler.

3A.9 MOUNTING ON A COMBUSTIBLE SURFACE

If the appliance is to be fitted on a wall of combustible material, a sheet of fireproof material must protect the wall.

3A.10 TIMBER FRAMED BUILDINGS

If the appliance is to be fitted in a timber framed building, it should be fitted in accordance with I.S. 813 and local Building Regulations.

The Institute of Gas Engineers publication (IGE/UP/7) 'Guide for Gas Installations in Timber Frame Buildings' gives specific advice on this type of installation.

3A.11 INHIBITORS

Vokera recommend that an inhibitor - suitable for use with copper and aluminium heat exchangers - is used to protect the boiler and system from the effects of corrosion and/or electrolytic action. The inhibitor must be administered in strict accordance with the manufacturers' instructions*.

*Water treatment of the complete heating system - including the boiler - should be carried out in accordance with I.S. 813 and the Domestic Water Treatment Association's (DWTA) code of practice.

3A.12 DECLARATION OF CONFORMITY

A Declaration of Conformity (as defined in I.S. 813) must be provided on completion of the installation.

A copy of the declaration must be given to the responsible person and also to the gas supplier if required.

4.1 DELIVERY

Due to the weight of the appliance it may be necessary for two people to lift and attach the appliance to its mounting. The appliance is contained within a heavy-duty cardboard carton. Lay the carton on the floor with the writing the correct way up.

4.2 CONTENTS

Contained within the carton is:

- the boiler
- the wall bracket
- appliance template
- an accessories pack containing appliance service connections and washers
- the instruction pack containing the installation & servicing instructions, user instructions, Benchmark logbook, guarantee registration card and a 3-amp fuse.

4.3 UNPACKING

At the top of the carton pull both sides open - do not use a knife - unfold the rest of the carton from around the appliance, carefully remove all protective packaging from the appliance, and lay the accessories etc. to one side. Protective gloves should be used to lift the appliance, the appliance back-frame should be used for lifting points.

4.4 PREPARATION FOR MOUNTING THE APPLIANCE

The appliance should be mounted on a smooth, vertical, non-combustible surface, which must be capable of supporting the full weight of the appliance. Care should be exercised when determining the position of the appliance with respect to hidden obstructions such as pipes, cables, etc.

When the position of the appliance has been decided - using the template supplied - carefully mark the position of the wall- mounting bracket (see fig. 6) and flue-hole (if applicable).

4.5 FITTING THE FLUE

The top flue outlet permits both horizontal and vertical flue applications to be considered, alternatively, the Vokera twin flue system can be utilised if longer flue runs are required.

4.5.1 CONCENTRIC HORIZONTAL FLUE

(For concentric vertical flue, see section 4.5.2).
(For twin flue applications, see section 4.5.3).

The appliance can be used with either the Vokera condensing 60/100mm concentric flue system or the optional 80/125mm concentric flue system.

NOTE

These instructions relate **only** to the Vokera condensing 60/100mm concentric flue system. For specific details on the installation of the 80/125mm concentric flue system please refer to the instructions supplied with the 80/125mm terminal.
The appliance flue outlet elbow can be rotated through 360° on its vertical axis. In addition the flue may be extended from the outlet elbow in the horizontal plane (see 2.9). A reduction must also be made to the maximum length (see table below) when additional bends are used.

Reduction for additional bends

Bend	Reduction in maximum flue length for each bend
45° bend	0.5 metre
90° bend	1.0 metre

Horizontal flue terminals and accessories

Part No.	Description	Min-Max Length
0225720	Horizontal flue kit for use with add. bends & extensions	1000 mm
0225755	Telescopic extension	350 mm – 500 mm
0225740	0.5m extension	500 mm
0225745	1.0m extension	1000 mm
0225750	2.0m extension	2000 mm
0225730	45° bend (pair)	N/A
0225735	90° bend	N/A
0225760	Wall bracket (5)	N/A

Using the template provided, mark and drill a 115mm hole for the passage of the flue pipe. The hole should be drilled level to ensure any condense fluid that forms will drain back to the boiler. The fixing holes for the wall-mounting bracket should now be drilled and plugged, an appropriate type and quantity of fixing should be used to ensure that the bracket is mounted securely. Once the bracket has been secured to the wall, mount the appliance onto the bracket.

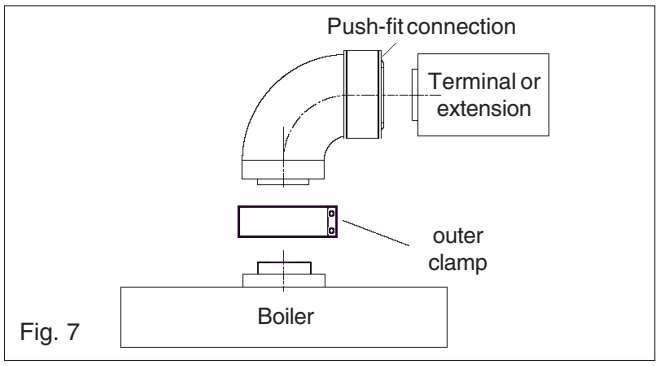

Fig. 7

FITTING THE HORIZONTAL FLUE KIT

Carefully measure the distance from the centre of the appliance flue outlet to the edge of the finished outside wall (dimension X). Add 45mm to dimension X to give you Dimension Y (see fig 7A). Measure dimension Y from the terminal end of the concentric flue pipe and cut off the excess ensuring any burrs are removed. Pass the concentric flue pipe through the previously drilled hole. Fit the flue bend to the boiler flue outlet and insert the concentric flue pipe into the flue bend ensuring the correct seal is made.
Using the clamp, gasket, and screws supplied, secure the flue bend to the appliance flue spigot. The 60mm M & F adaptor (supplied with the flue kit) should be discarded.

NOTE

Fit the internal (White) trim to the flue assembly prior to connecting the flue pipe to the bend.
You must ensure that the entire flue system is properly supported and connected.
Seal the flue assembly to the wall using cement or a suitable alternative that will provide satisfactory weatherproofing. The exterior trim (Black) can now be fitted.

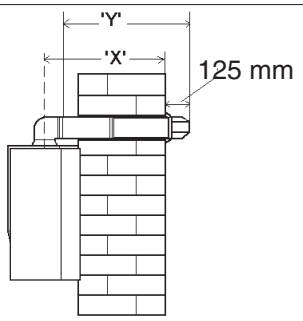

Fig. 7a "**X**" + 45 mm = "**Y**"

FLUE RESTRICTOR RING (horizontal flue)

To ensure maximum efficiency of the appliance, it may be necessary to fit one of the supplied flue restrictor rings to the appliance flue outlet (see tables below).

COMPACT 25 HE

Total flue length	Restrictor required
Less than 1.2 metre	82.5mm diameter
Less than 3.0 metres	88mm diameter
Less than 4.5 metres	not required

COMPACT 29 HE

Total flue length	Restrictor required
Less than 2.0 metres	84mm diameter
Less than 4.0 metres	not required

COMPACT 35 HE

Total flue length	Restrictor required
Less than 1.85 metres	not required

4.5.1.1 EXTENDING THE FLUE

Connect the bend - supplied with the terminal kit - to the top of the boiler using clamp (supplied) see fig. 7. The additional bends & extensions have push-fit connections, care should be taken to ensure that the correct seal is made when assembling the flue system. Connect the required number of flue extensions or bends (up to the maximum equivalent flue length) to the flue terminal (see fig. 7 & 8).

The flue pipe should have a minimum 1-degree rise from the boiler (17mm every 1.0 metre) to ensure that any condense fluid drains back to the appliance.

NOTE

When cutting an extension to the required length, you must ensure that the excess is cut from the plain end of the extension (see fig. 7 & 8). Remove any burrs, and check that all seals are located properly.

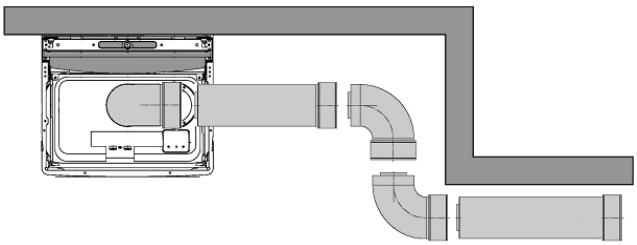

Fig. 8

You must ensure that the entire flue system is properly supported and connected.

Seal the flue assembly to the wall using cement or a suitable alternative that will provide satisfactory weatherproofing.

4.5.2 CONCENTRIC VERTICAL FLUE

The appliance can be used with either the Vokera condensing 60/100mm concentric flue system or the optional 80/125mm concentric flue system.

NOTE

These instructions relate **only** to the Vokera condensing 60/100mm concentric flue system. For specific details on the installation of the 80/125mm concentric flue system please refer to the instructions supplied with the 80/125mm terminal.

The vertical flue terminal can be connected directly to the appliance flue outlet. Alternatively, an extension or bend can be connected to the appliance flue outlet if desired (see 4.4.2), however if additional bends are fitted, a reduction must be made to the maximum flue length (see table below).

Reduction for bends

Bend	Reduction in maximum flue length for each bend
45º bend	0.5 metre
90º bend	1.0 metre

Vertical flue terminal and accessories

Part No.	Description	Min-Max Length
0225725	Vertical flue terminal	1.0 metre
0225770	Pitched roof flashing plate	N/A
0225765	Flat roof flashing plate	N/A
0225755	350-500 telescopic extension	350 mm – 500 mm
0225740	0.5m extension	500 mm
0225745	1.0m extension	1000 mm
0225750	2.0m extension	2000 mm
0225730	45º bend (pair)	N/A
0225735	90º bend	N/A
0225760	Wall bracket (4)	N/A

Using the dimensions given in fig. 9 as a reference, mark and cut a 107mm hole in the ceiling and/or roof.

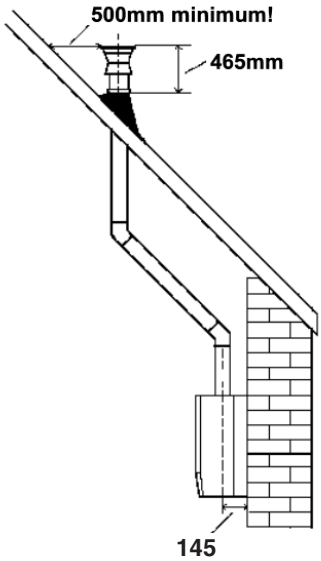

Fig. 9

Fit the appropriate flashing plate to the roof and insert the vertical flue terminal through the flashing plate from the outside, ensuring that the collar on the flue terminal fits over the flashing.
The fixing holes for the wall-mounting bracket should now be drilled and plugged, an appropriate type and quantity of fixing should be used to ensure that the bracket is mounted securely. Once the bracket has been secured to the wall, mount the appliance onto the bracket.

IMPORTANT
The vertical flue terminal is 1.0 metre in length and cannot be cut; therefore it may be necessary to adjust the height of the appliance to suit or use a suitable extension.

Connect the vertical flue assembly to the boiler flue spigot using the 60mm & 100mm clips, gaskets & screws (supplied), ensuring the correct seal is made. The flue support bracket (supplied with the vertical flue kit) can now be fitted.

If the vertical flue requires extension/s or additional bend/s, connect the required number of flue extensions or bends (up to the maximum equivalent flue length) between the boiler and vertical flue assembly (see fig. 8).

Ensure that any horizontal sections of the flue system have a minimum 1° fall back to the boiler (17mm per 1000mm).

NOTE
When cutting an extension to the required length, you must ensure that the excess is cut from the plain end of the extension (see fig. 8). Remove any burrs, and check that any seals are located properly.

You must ensure that the entire flue system is properly supported and connected.

FLUE RESTRICTOR RING (vertical flue)
To ensure maximum efficiency of the appliance, it may be necessary to fit one of the supplied flue restrictor rings to the appliance flue outlet (see tables below).

COMPACT 25 HE

Total flue length	Restrictor required
Less than 2.0 metre	82.5mm diameter
Less than 4.0 metres	88mm diameter
Less than 5.5 metres	not required

COMPACT 29 HE

Total flue length	Restrictor required
Less than 2.8 metres	84mm diameter
Less than 5.0 metres	not required

COMPACT 35 HE

Total flue length	Restrictor required
Less than 2.7 metres	not required

4.5.3 TWIN FLUE SYSTEM

The Vokera twin flue system enables greater flue distances to be achieved (see 4.4.2) than that of a concentric flue system. It can be used for horizontal or vertical applications, however the twin flue system must be converted to the dedicated concentric flue kit for termination. It is essential that the installation of the twin flue system be carried out in strict accordance with these instructions.

GUIDANCE NOTES ON TWIN FLUE INSTALLATION

- The flue must have a fall back of 1° back to the appliance to allow any condensate that may form in the flue system to drain via the condensate drain. Consideration must also be given to the fact that there is the possibility of a small amount of condensate dripping from the terminal.
- Ensure that the entire flue system is adequately supported, use at least one bracket for each extension.
- The entire flue system must be adequately insulated to maintain heat within the flue system thereby reducing the possibility of condensate production.
- As the exhaust outlet pipe can reach very high temperatures it must be protected to prevent persons touching the hot surface.
- The condensate drainpipe must be connected in accordance with local building regulations that are in force.

Reduction for bends

Bend	Reduction in maximum flue length for each bend
45° bend	1.0 metre
90° bend	1.0 metre

Twin flue accessories

Part No.	Description	Min-Max Length
0225805	Horizontal flue terminal	1.0 metre
0225810	Vertical flue terminal	1.0 metre
430	Twin adapter kit	N/A
0225770	Pitched roof flashing plate	N/A
0225765	Flat roof flashing plate	N/A
0225815	Condensate drain kit	N/A
0225820	0.25 m extension (pair)	250 mm
0225825	0.5 m extension (pair)	500 mm
0225830	1.0 m extension (pair)	1000 mm
0225835	2.0 m extension (pair)	2000 mm
0225840	45° bend (pair)	N/A
0225845	90° bend (pair)	N/A
0225850	Twin bracket (5)	N/A
0225855	Single bracket (5)	N/A

MOUNTING THE BOILER
The fixing holes for the wall-mounting bracket should now be drilled and plugged, an appropriate type and quantity of fixing should be used to ensure that the bracket is mounted securely. Once the bracket has been secured to the wall, mount the appliance onto the bracket.

FLUE RESTRICTOR RING (vertical flue)
To ensure maximum efficiency of the appliance, it may be necessary to fit one of the flue restrictor rings (supplied with the twin adaptor kit) to the appliance flue outlet (see tables below).

COMPACT 25 HE

Total flue length	Restrictor required
Less than 7.0 metre	40mm diameter
Less than 13.5 metres	45mm diameter
Less than 19.5 metres	not required

COMPACT 29 HE

Total flue length	Restrictor required
Less than 5.0 metres	45mm diameter
Less than 12.0 metres	not required

Total flue length	Restrictor required
Less than 5.0 metres	50mm diameter
Less than 10.0 metres	not required

4.5.3.1 INSTALLATION OF TWIN ADAPTOR KIT (fig. 10 & 11)

- Insert the exhaust connection manifold (A) onto the appliance flue outlet.
- Remove the blanking plate (located to the right of the appliance flue outlet) and – using the same screws – install the air inlet plate (B).
- Using the hole in the exhaust connection manifold as a guide, drill a 3mm hole in the appliance flue spigot and secure the exhaust manifold connection to the flue spigot using the screw provided (C).
- Using the two holes in the air inlet plate as a guide, drill a 3mm hole in each and secure the air inlet pipe/bend using the screws provided.
- The twin flue pipes extensions and accessories can now be installed by pushing together (the plain end of each extension or bend should be pushed approximately 50mm into the female socket of the previous piece).

Fig. 10

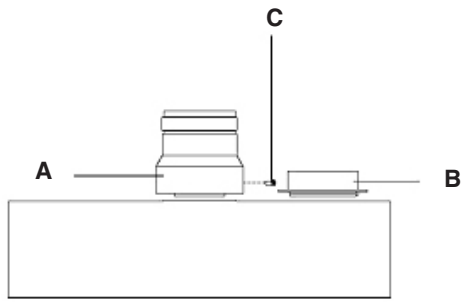

Fig. 11

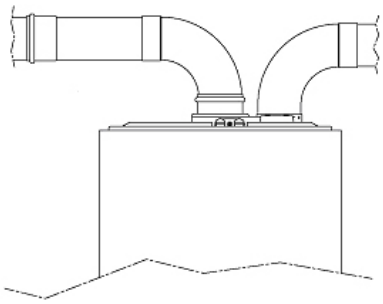

4.5.3.2 HORIZONTAL TERMINATION (see fig. 12)

The twin flue system must be converted to the dedicated concentric flue kit for termination.

- The horizontal terminal is supplied with a built-in converter box and cannot be shortened.
- A 130mm hole is required for the passage of the concentric terminal through the wall.

Depending on site conditions it may be preferable to install the terminal assembly prior to fitting the twin flue pipes.

Mark and drill a 130mm hole for the passage of the horizontal flue terminal, ensuring that there is a minimum 1° fall back to the boiler (17mm per 1000mm). Insert the terminal assembly into the flue hole.

Push-fit the twin flue pipes onto the concentric to twin converter box ensuring that the exhaust pipe connects to the exhaust connection on the concentric to twin converter.

If necessary cut the plain ends (male) of the twin flue pipes to allow connection to the concentric to twin converter.

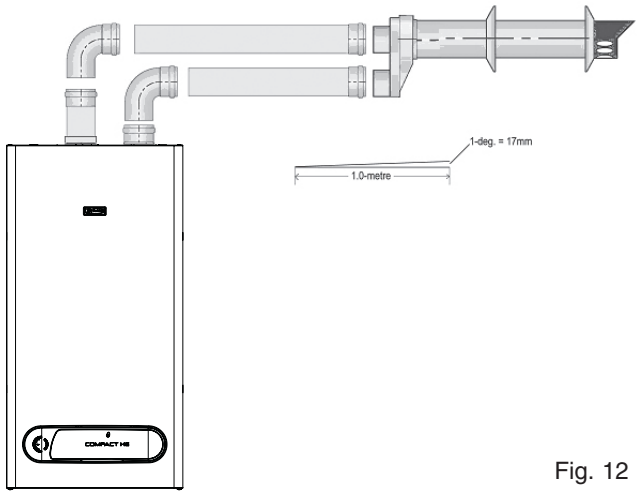

Fig. 12

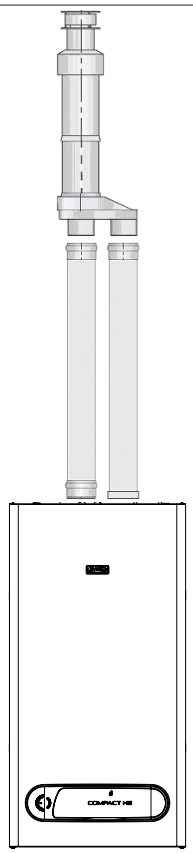

Fig. 13

NOTE

Before cutting twin flue pipes ensure allowances have been made for connection onto the previous piece and onto the concentric to twin converter. The last twin flue pipes must be pushed 50mm onto the male spigots of the concentric to twin converter.

NOTE

You must ensure that the entire flue system is properly supported and connected.

Seal the flue terminal assembly to the wall using cement or a suitable alternative that will provide satisfactory weatherproofing. The interior and exterior trim can now be fitted.

4.5.3.3 VERTICAL TERMINATION (see fig. 13)

The twin flue system must be converted to the dedicated concentric flue kit for termination.

- The vertical terminal is supplied with a built-in converter box and cannot be shortened.
- A 130mm hole is required for the passage of the concentric terminal through the ceiling and/or roof.

Depending on site conditions it may be preferable to install the terminal assembly prior to fitting the twin flue pipes.
Fit the appropriate flashing plate to the roof and insert the vertical flue terminal through the flashing plate from the outside, ensuring that the collar on the flue terminal fits over the flashing.

Push-fit the twin flue pipes onto the concentric to twin converter ensuring that the exhaust pipe connects to the exhaust connection on the concentric to twin converter.
If necessary cut the plain ends (male) of the twin flue pipes to allow connection to the concentric to twin converter.

NOTE

- Before cutting twin flue pipes ensure allowances have been made for connection onto the previous piece and onto the concentric to twin converter. The last twin flue pipes must be pushed 50mm onto the male spigots of the concentric to twin converter.
- You must ensure that the entire flue system is properly supported and connected.
- Ensure that any horizontal sections of pipe have a minimum 1° fall towards the appliance (17mm per 1000mm).

4.6 CONNECTING THE GAS AND WATER

The appliance is supplied with an accessory pack that includes service valves.
The service valves are of the compression type. The accessory pack contains sealing washers' etc, for use with the service valves. When connecting pipe work to the valves, tighten the compression end first then insert the sealing washers before tightening the valve to the appliance.

NOTE

It will be necessary to hold the valve with one spanner whilst tightening with another

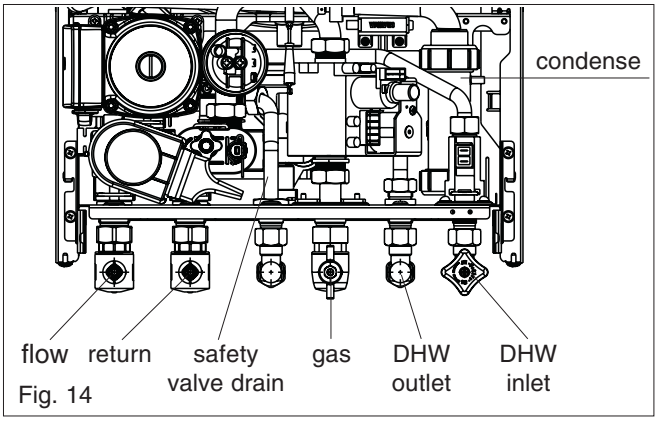

Fig. 14

4.6.1 GAS (fig. 6 & 14)

The appliance is supplied with a 15mm service valve, connect a 15mm pipe to the inlet of the valve and tighten both nuts.

NOTE

It will be necessary to calculate the diameter of the gas supply pipe to ensure the appliance has an adequate supply of gas.

4.6.2 FLOW & RETURN (fig. 6 & 14)

The appliance is supplied with 22mm service valves for the flow and return connections, connect a 22mm pipe to the inlet of each valve and tighten both nuts.

NOTE

Depending on system requirements, it may necessary to increase the size of the flow & return pipe work after the service valve connections.

4.6.3 COLD WATER INLET (fig. 6 & 14)

The appliance is supplied with a 15mm stopcock, connect a 15mm pipe to the inlet of the stopcock and tighten both nuts.

4.6.4 HOT WATER OUTLET (fig. 6 & 14)

The appliance is supplied with a 15mm outlet connection, connect a 15mm pipe to the outlet connection and tighten both nuts.

4.6.5 SAFETY VALVE (fig. 6 & 14)

Connect the safety valve connection pipe to the safety valve outlet and tighten. The discharge pipe must have a continuous fall away from the appliance to outside and allow any water to drain away thereby eliminating the possibility of freezing. The discharge pipe must terminate in a position where any water - possibly boiling - discharges safely without causing damage or injury, but is still visible.

4.6.6 CONDENSE PIPE (fig. 6 & 14)

During normal operation the boiler produces condense which is collected in a trap located in the lower part of the boiler. A flexible pipe (condense outlet pipe) is connected to the outlet of the trap. The flexible pipe must be connected to a plastic waste pipe only. The plastic waste pipe must have a minimum of a 3° fall towards the drain. Any external run of pipe should be insulated to prevent the risk of freezing.

CONNECTING THE CONDENSATE OUTLET

Gently pull the condense outlet pipe down from its location inside the boiler until approximately it protrudes from the underside of the boiler. Connect a suitable plastic (not copper) pipe (no less than 21mm diameter) to the outlet pipe and ensure it discharges in accordance with local building regulations or other rules in force.

4.7 ELECTRICAL CONNECTIONS

The boiler is supplied with a 2-metre fly-lead. This lead can be used for connection to the electrical supply. Connect the fly-lead to a fused plug or fused isolator in the following way:

- brown wire to LIVE supply
- blue wire to NEUTRAL supply
- green/yellow to EARTH connection.

Insert the supplied 3-AMP fuse into the fused isolator or fused plug.

Should the fly-lead be unsuitable, refer to 4.7.3 for details on how to connect the electrical supply directly to the boiler.

The electrical supply must be as specified in section 3/3A. A qualified electrician should connect the appliance to the electrical supply. If controls - external to the appliance - are required, a competent person must undertake the design of any external electrical circuits, please refer to section 8 for detailed instructions. ANY EXTERNAL CONTROL OR WIRING MUST BE SERVED

FROM THE SAME ISOLATOR AS THAT OF THE APPLIANCE. The supply cable from the isolator to the appliance must be 3-core flexible sized 0.75mm to BS 6500 or equivalent. Wiring to the appliance must be rated for operation in contact with surfaces up to 90 ºC.

4.7.1 CASING REMOVAL

To gain internal access to the appliance you must first remove the casing, proceed as outlined below:

- locate and unscrew the 3-screws (**A**) that secure the outer casing to the appliance (see fig. 15)
- lift the casing upward to disengage it from the top locating hooks and then remove
- store the casing and screws safely until required. Re-fit in the reverse order
- gently lower the control fascia until it rests.

Control panel screws and casing screws

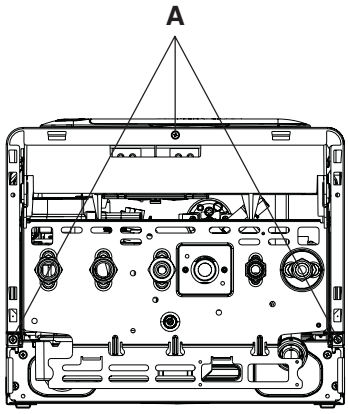

Fig. 15

4.7.2 APPLIANCE TERMINAL BLOCK

The appliance terminal block is located on the left side of the control fascia (see fig. 15). Locate and remove the screw that secures the terminal block cover.

NOTE

The appliance comes with a factory fitted clock to allow basic operation of the boiler. If it is anticipated that additional controls - such as a room thermostat - will be required please refer to the wiring diagrams in section 8 for more detailed information.

4.7.3 CONNECTING THE MAINS (230V) INPUT (see fig. 16)

Lift the terminal block cover as described in 4.7.2. Pass the cable through the cable anchorage point. At the terminal block on the extreme left, there are 3 terminals from left to right they are:

LIVE
NEUTRAL
EARTH

Connect the supply cable wires (LIVE, NEUTRAL & EARTH) to their corresponding terminals on the appliance terminal block (see fig. 17). Ensure that the EARTH wire is left slightly longer than the others, this will prevent strain on the EARTH wire should the cable become taut.

The securing screw on the cable anchorage should now be tightened. This must be done before the control fascia is re-fitted in the upright position. The appliance casing and screws can now be re-fitted.

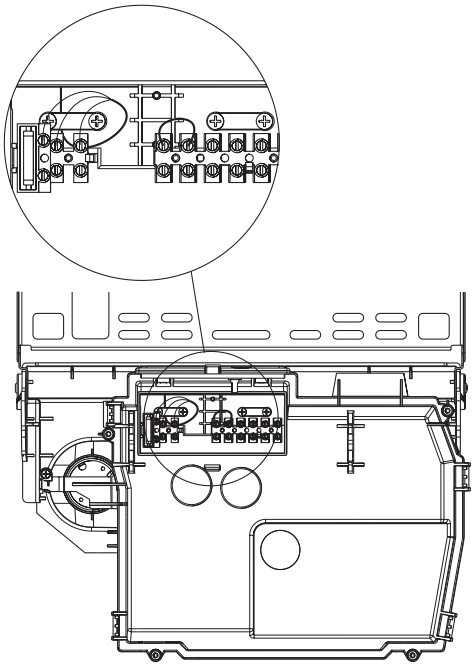

Fig. 16

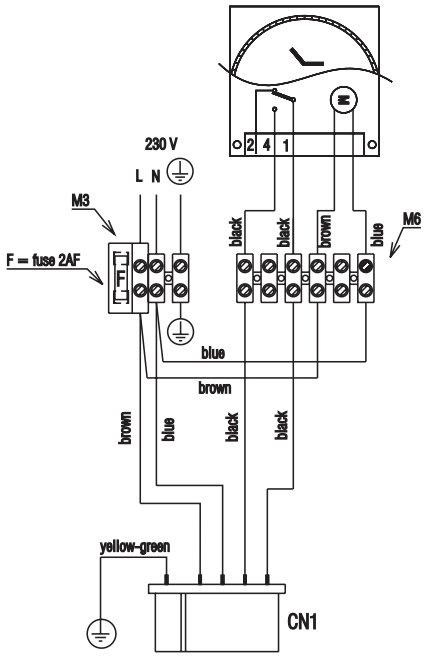

Fig. 17

5.1 GAS SUPPLY INSTALLATION

Inspect the entire installation including the gas meter, test for soundness and purge. Refer to BS 6891 for specific instruction.

5.2 THE HEATING SYSTEM

The appliance contains components that may become damaged or rendered inoperable by oils and/or debris that are residual from the installation of the system, consequently it is essential that the system be flushed in accordance with the following instructions.

5.3 INITIAL FILLING OF THE SYSTEM

Ensure both flow and return service valves are open, remove appliance casing as described in 4.7.1, identify the automatic air release valve and loosen the dust cap by turning the cap anti-clockwise one full turn. IMPORTANT, THERE ARE NO MANUAL AIR RELEASE VALVES LOCATED ON THE APPLIANCE. Ensure all manual air release valves located on the heating system are closed. Connect the filling loop (not supplied) and slowly proceed to fill the system. As water enters the system the pressure gauge will begin to rise. Once the gauge has reached 1 BAR close the filling loop and begin venting all manual air release valves, starting at the lowest first. It may be necessary to go back and top-up the pressure until the entire system has been filled. Inspect the system for water soundness, rectifying any leaks.

5.4 INITIAL FLUSHING

The whole of the heating system must be flushed both cold and hot as detailed in 5.8. Open all radiator or heating valves and the appliance flow & return service valves. Drain the boiler and system from the lowest points. Open the drain valve full bore to remove any installation debris from the boiler prior to lighting. Refill the boiler and heating system as described in 5.3.

5.5 FILLING THE HOT WATER SYSTEM

Close all hot water outlets, turn appliance stopcock to the normal operating position (fully counter clockwise), slowly open each outlet until air has been expelled and clear water is discharged. Check pipe-work etc. for water soundness.

5.6 PRE-OPERATION CHECKS

Before attempting the initial lighting of the appliance, the following checks must be carried out:

- ensure all gas service valves from the meter to the appliance are open and the supply pipe has been properly purged
- ensure the proper electrical checks have been carried out, (see 7.7) particularly continuity, polarity, and resistance to earth
- ensure the 3 AMP fuse – supplied with the appliance – has been fitted.
- ensure the system has been filled, vented, and the pressure set to 1 BAR.
- ensure the flue system has been fitted properly and in accordance with the instructions
- ensure all appliance service valves are open.

5.7 INITIAL LIGHTING

Ensure the electrical supply to the appliance is switched on. Move the selector switch to the Heating & Hot Water position, ensure the time clock is switched to an 'ON' position and ensure any other external controls (room thermostat for example) are also calling for heat.
The appliance will now operate in the mode as described in 1.2. Should the appliance fail to ignite, refer to 5.6 and/or section 7 (faultfinding).

5.7.1 CHECKING THE BURNER PRESSURE

Although the burner pressure is factory set, it is necessary to check it during commissioning. Isolate the appliance from the electrical supply and attach a suitable manometer to the gas valve outlet test-point (see fig. 18). Light the boiler as described in 5.7, turn the Hot Water temperature selector to maximum, and open fully a DHW outlet (preferably the bath), allowing the appliance to stabilise. Compare the reading on the manometer with the value described in 2.3. If adjustment is required, follow the detailed instructions in section 7 (7.3).

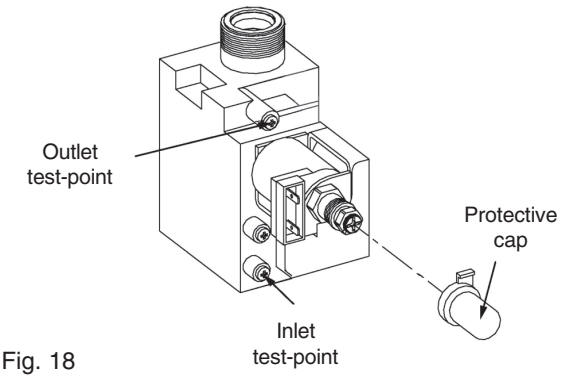

Fig. 18

Once the burner pressure has been checked, close the DHW outlet, isolate the appliance from the electrical supply, remove the manometer, and tighten the gas valve outlet test nipple.

5.8 FINAL FLUSHING OF THE HEATING SYSTEM

The system shall be flushed in accordance with BS 7593. Should a cleanser be used, it must be suitable for Copper and Aluminium heat exchangers. It shall be from a reputable manufacturer and shall be administered in strict accordance with the manufacturers' instructions and the DWTA code of practice.

5.8.1 INHIBITORS

See section 3 "General requirements".

5.9 SETTING THE BOILER OPERATING TEMPERATURE

The flow outlet temperature can be adjusted between 40ºC - 80ºC via the Heating thermostat knob (see fig.1).

5.9.1 SETTING THE DOMESTIC HOT WATER TEMPERATURE

The DHW outlet temperature can be adjusted between 40ºC - 65ºC via the Hot Water thermostat knob (see fig.1).

5.10 SETTING THE SYSTEM DESIGN PRESSURE

The design pressure should be a minimum of 1 BAR and a maximum of 1.5 BAR.

The actual reading should ideally be 1BAR plus the equivalent height in metres (0.1 BAR = 1 metre) to the highest point in the system above the base of the appliance (up to the maximum of 1.5 BAR total).

N.B. The safety valve is set to lift at 3 BAR/30 metres/45 psig.ee fig.1).

To lower the system pressure to the required value, water can be drained from the heating system drain cock or from the boiler drain cock.

5.11 REGULATING THE HOT WATER

The appliance is fitted with a flow rate restrictor that limits the maximum flow rate that can be drawn through the appliance.

COMPACT 25 HE

8-litre (White)	9-litre (Orange)	10-litre (Blue)
Fitted	Spare	Spare

COMPACT 29 HE

9-litre (Orange)	10-litre (Blue)	11-litre (Beige)
Spare	**Fitted**	Spare

COMPACT 35 HE

11-litre (Beige)	12-litre (Red)	13-litre (Olive)
Spare	**Fitted**	Spare

The restrictor eliminates the need to manually adjust the DHW flow rate. However if it is felt necessary to further increase or decrease the available flow rate, spare restrictors are included in the accessory pack.

The spare flow rate restrictors can be fitted to either increase or decrease the maximum flow rate. The tables above denote the size of restrictor fitted and the spare restrictors supplied in the accessory pack. Each restrictor is colour-coded to enable identification.

5.11.1 CHANGING THE FLOW RESTRICTOR

Refer to 6.19 for detailed instruction on changing the flow restrictor.

5.11.2 REGULATING THE CENTRAL HEATING SYSTEM

Fully open all radiator and circuit valves and run the appliance for both heating and hot water until heated water is circulating. If conditions are warm remove any thermostatic heads. Adjust radiator return valves and any branch circuit return valves until the individual return temperatures are correct and are approximately equal.

5.12 FINAL CHECKS

- ENSURE ALL TEST NIPPLES ON THE APPLIANCE GAS VALVE HAVE BEN TIGHTENED AND CHECKED FOR SOUNDNESS.
- ENSURE THE APPLIANCE FLUE SYSTEM IS FITTED CORRECTLY AND IS PROPERLY SECURED.
- ENSURE ALL PIPE WORK IS RE-CHECKED FOR SOUNDNESS.
- RE-FIT APPLIANCE CASING.
- COMPLETE BENCHMARK CHECKLIST.

FOR UK ONLY

Complete details of the boiler, controls, installation and commissioning in the Benchmark checklist at the back of this book. It is important that the Benchmark checklist is correctly completed and handed to the user. Failure to install and commission the appliance to the manufacturers instructions may invalidate the warranty.

5.13 INSTRUCTING THE USER

Hand over all documentation supplied with this appliance - including these instructions - and explain the importance of keeping them in a safe place.

Explain to the user how to isolate the appliance from the gas, water and electricity supplies, and the locations of all drain points.

Show the user how to operate the appliance and any associated controls correctly.

Show the user the location of the filling valve and how to top-up the system pressure correctly, and show the location of all manual air release points.

Explain to the user how to turn off the appliance for both long and short periods and advise on the necessary precautions to prevent frost damage.

Explain to the user that for continued safe and efficient operation, the appliance must be serviced annually by a competent person.

6.1 GENERAL

To ensure the continued safe and efficient operation of the appliance, it is recommended that it is checked and serviced at regular intervals.

To ensure correct and safe operation of the appliance, it is essential that any worn or failed component be replaced only with a genuine Vokera spare part.

The frequency of servicing will depend upon the particular installation conditions, but in general, once per year should be adequate.

It is the law that any servicing work is carried out by competent person such as a Vokera engineer, an approved service agent, British Gas, CORGI registered personnel or other suitably qualified personnel.

The following instructions apply to the appliance and its controls, but it should be remembered that the central heating and the domestic hot water systems would also require attention from time to time.

6.2 ROUTINE ANNUAL SERVICING

Check the operation of the appliance and ensure it functions as described in section 7. Compare the performance of the appliance with its design specification. The cause of any noticeable deterioration should be identified and rectified without delay.

Thoroughly inspect the appliance for signs of damage or deterioration especially the flue system and the electrical apparatus.

Check and adjust - if necessary - all burner pressure settings (see section 7.3).

Check and adjust - if necessary - the system design pressure (see section 5.10).

Carry out an analysis of the flue gases (see 7.4) and visually check the condition of the entire flue assembly. Compare the results with the appliance design specification. Any deterioration in performance must be identified and rectified without delay.

Ensure both flue venturis are clean and free from any debris or obstruction.

Ensure the burner, main heat exchanger and latent heat collector are clean and free from any debris or obstruction.

6.3 REPLACEMENT OF COMPONENTS

Although it is anticipated that this appliance will give years of reliable, trouble free service, the life span of components will be determined by factors such as operating conditions and usage. Should the appliance develop a fault, the fault finding section will assist in determining which component is malfunctioning.

6.4 COMPONENT REMOVAL PROCEDURE

To remove a component, access to the interior of the appliance is essential. Isolate the appliance from the electrical supply and remove the fuse. And when necessary, close all service valves on the appliance, remove the appliance casing as described in section 4.7.1 and drain the water content from the appliance via the drain valve located at the front of the hydraulic section using the tube provided. Ensure some water absorbent cloths are available to catch any residual water that may drip from the appliance or removed component. Undertake a complete commissioning check as detailed in section 5, after replacing any component. **ALWAYS TEST FOR GAS SOUNDNESS IF ANY GAS CARRYING COMPONENTS HAVE BEEN REMOVED OR DISTURBED.**

6.5 PUMP ASSEMBLY fig. 19

Carry out component removal procedure as described in 6.4.

The pump head can be replaced by disconnecting the electrical connection at the pump and removing the 4-Allen screws that secure the head to the pump base. Alternatively, the complete pump assembly can be removed as follows:

- disconnect the electrical connection from the pump control box
- locate and remove the pressure gauge securing pin and disconnect the pressure gauge from the pump assembly
- locate and remove the expansion pipe securing pin and disconnect the expansion pipe from the pump assembly
- locate and remove the condense pipe located between the air-chamber and condense trap
- refer to fig. 19, disconnect and remove items A, B & C
- locate and remove securing pin ‘F’ and lift the pump assembly away from the hydraulic section.

Replace in the reverse order.

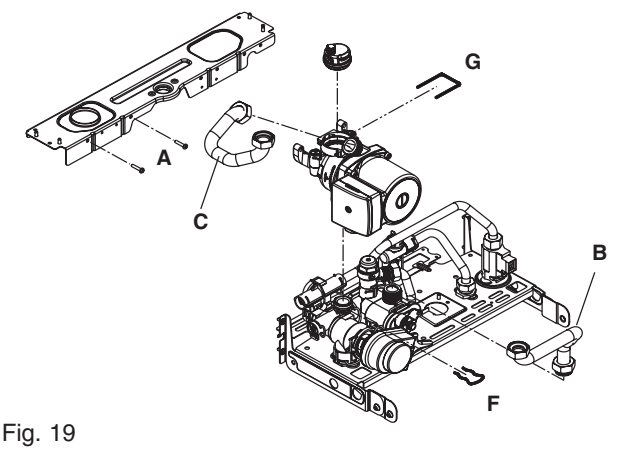

Fig. 19

6.6 SAFETY VALVE fig. 20

Carry out component removal procedure as described in 6.4.

Disconnect and remove the safety valve outlet pipe. Locate and remove the safety valve securing pin (B). The safety valve can now be removed. Replace in the reverse order.

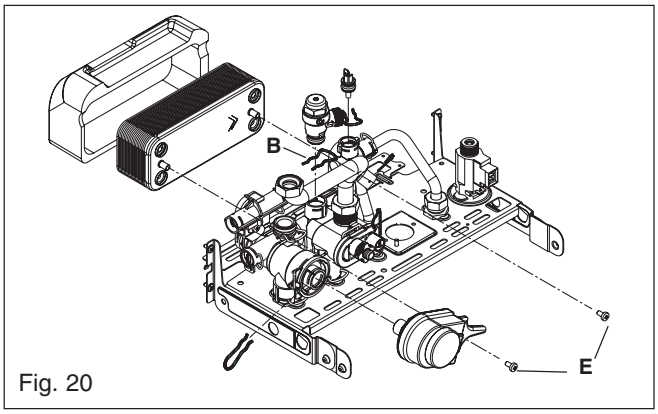

Fig. 20

6.7 AUTOMATIC AIR RELEASE VALVE fig. 19 (AAV)

Carry out component removal procedure as described in 6.4.

Locate and remove the expansion pipe securing pin and disconnect the expansion pipe from the pump assembly. Locate and remove the AAV securing pin (G) and lift the AAV free from the pump assembly.

Replace in the reverse order.

6.8 WATER PRESSURE SWITCH fig. 1

Carry out component removal procedure as described in 6.4.

Disconnect the 2-wires from the water pressure switch, taking note of their locations. Locate and remove the pin that secures the water pressure switch to the flow pipe. Remove the water pressure switch from the flow pipe. Replace in the reverse order.

6.9 PRESSURE GAUGE fig. 1

Carry out component removal procedure as described in 6.4.

Locate and remove the pressure gauge securing pin and disconnect the pressure gauge from the pump assembly. Locate the spring tabs on the pressure gauge body, push and hold tabs in, to enable extraction of the gauge from its location on the control panel.

Replace in the reverse order.

6.10 PRIMARY THERMISTOR fig. 21

Carry out component removal procedure as described in 6.4.

Unclip and remove the air chamber cover and remove the right side air baffle.

Disconnect thermistor electrical plug.

Using a 13mm spanner slacken and remove the thermistor and sealing washer (1,2) from the main heat exchanger.

Replace in the reverse order.

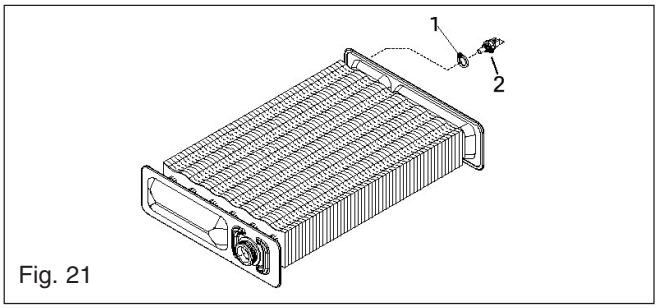

Fig. 21

6.11 HIGH LIMIT THERMOSTAT fig. 22

Carry out component removal procedure as described in 6.4.

Unclip and remove the air chamber cover.

Pull off electrical connections from the high limit thermostat (2), slacken and remove retaining screws (3).

Replace in reverse order.

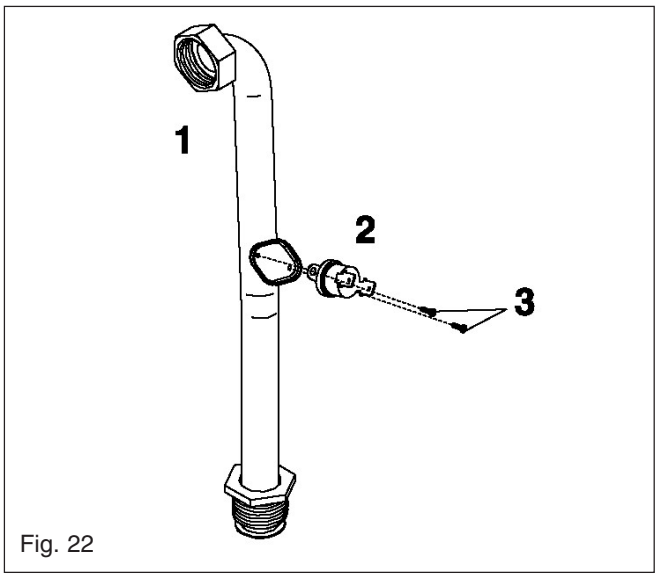

Fig. 22

6.12 PRINTED CIRCUIT BOARD fig. 23

Carry out component removal procedure as described in 6.4.

Locate and remove the screws that secure the PCB cover, then remove cover. After carefully taking note of all wiring connections, disconnect all wiring from the PCB, locate and remove the PCB securing screws (2,3,), remove the required PCB (Main or ignition control). Replace in the reverse order.

NOTE

Ensure that any replacement PCB has the correct jumper tag configuration, and that the relevant gas pressures are correctly set/adjusted (see 7.8.1).

6.13 GAS VALVE fig. 24

Carry out component removal procedure as described in 6.4. The gas valve must be changed as complete unit. Disconnect the electrical plug and leads from the gas valve.

Slacken and unscrew gas valve inlet and outlet connections (3). **Please note,** the sealing washers (2) must be discarded and replaced with new sealing washers (2). Locate and remove gas valve retaining screws on the underside of the boiler if required. The gas valve can now be removed. Replace in the reverse order. Check and adjust burner pressure settings. **WARNING, A GAS SOUNDNESS CHECK MUST BE CARRIED OUT.**

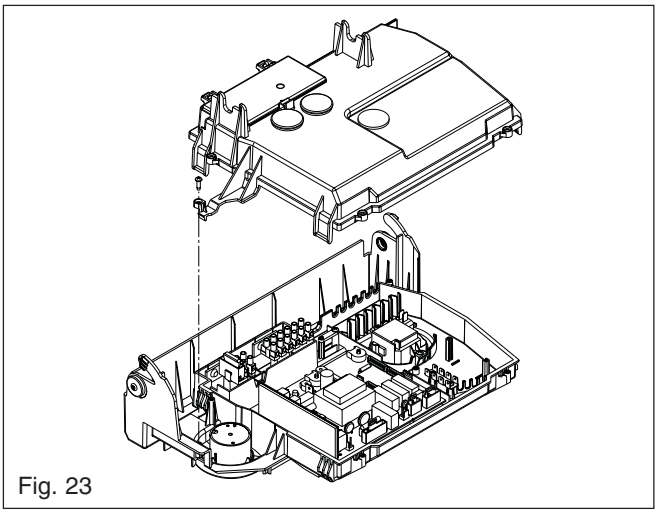

Fig. 23

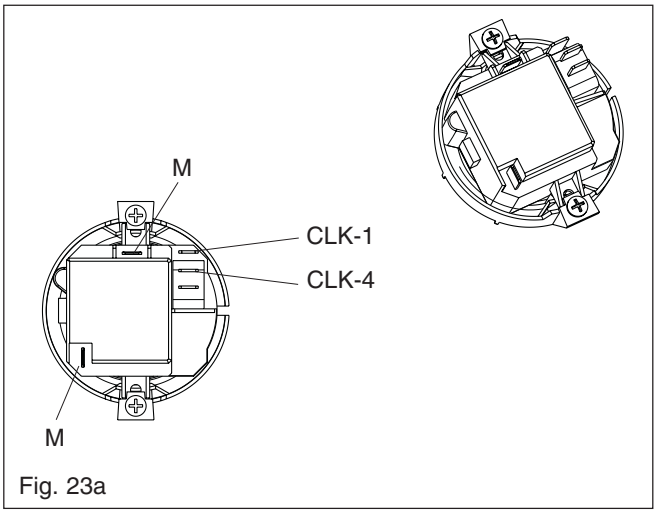

Fig. 23a

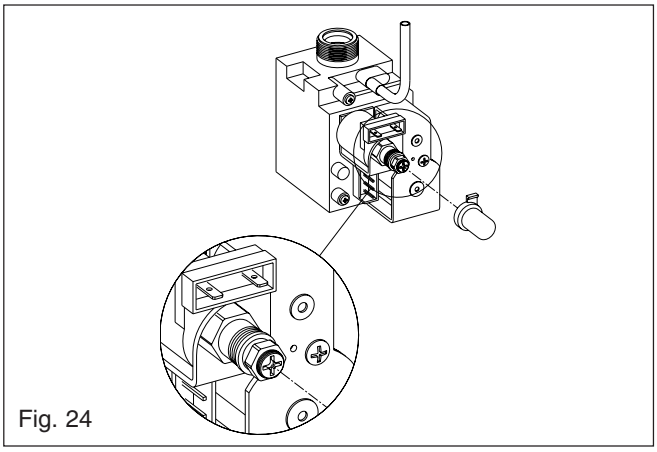

Fig. 24

6.14 INTEGRAL TIME SWITCH (if fitted)

Carry out component removal procedure as described in 6.4.

Locate and remove the PCB cover and securing screws (fig 23/23A), locate and remove the time clock retaining screws, remove time clock. Disconnect wiring after carefully taking note of all electrical connections. Replace in the reverse order.

6.15 ELECTRODE, BURNER THERMOSTAT, BURNER & INJECTORS fig. 25

Carry out component removal procedure as described in 6.4.

Unclip and remove the air chamber cover (2). Locate and remove the 6 screws securing the front combustion cover (3), pull the cover towards you before lifting and disengaging. Disconnect the electrode lead and burner thermostat from their respective connectors. Ease the electrode sealing grommet from its seating (4). Remove the retaining screw for the burner thermostat and remove the thermostat.

FIG. 26: locate and remove the four screws which secure the burner in position (1), gently ease the burner out of its location. Once the burner has been removed, the electrode retaining screw can be removed. Locate the burner injectors (2) and remove (if necessary). Replace in the reverse order. **Please note,** the injector sealing washers (3) must be replaced if the injectors have been removed, ensure all seals are in good condition, taking care to ensure they are replaced correctly. Replace in the reverse order.

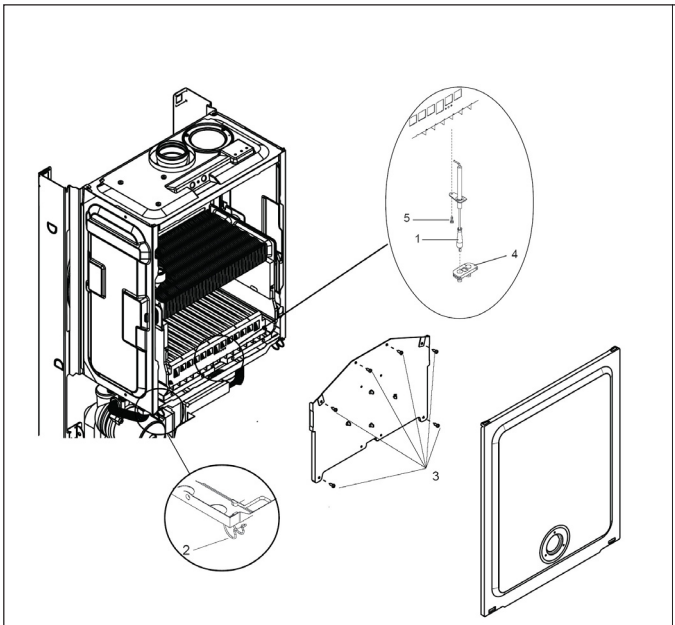

Fig. 25

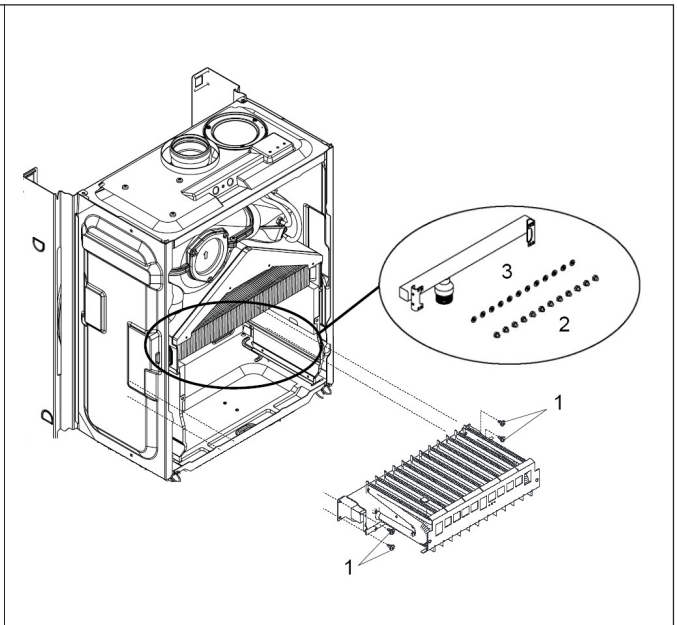

Fig. 26

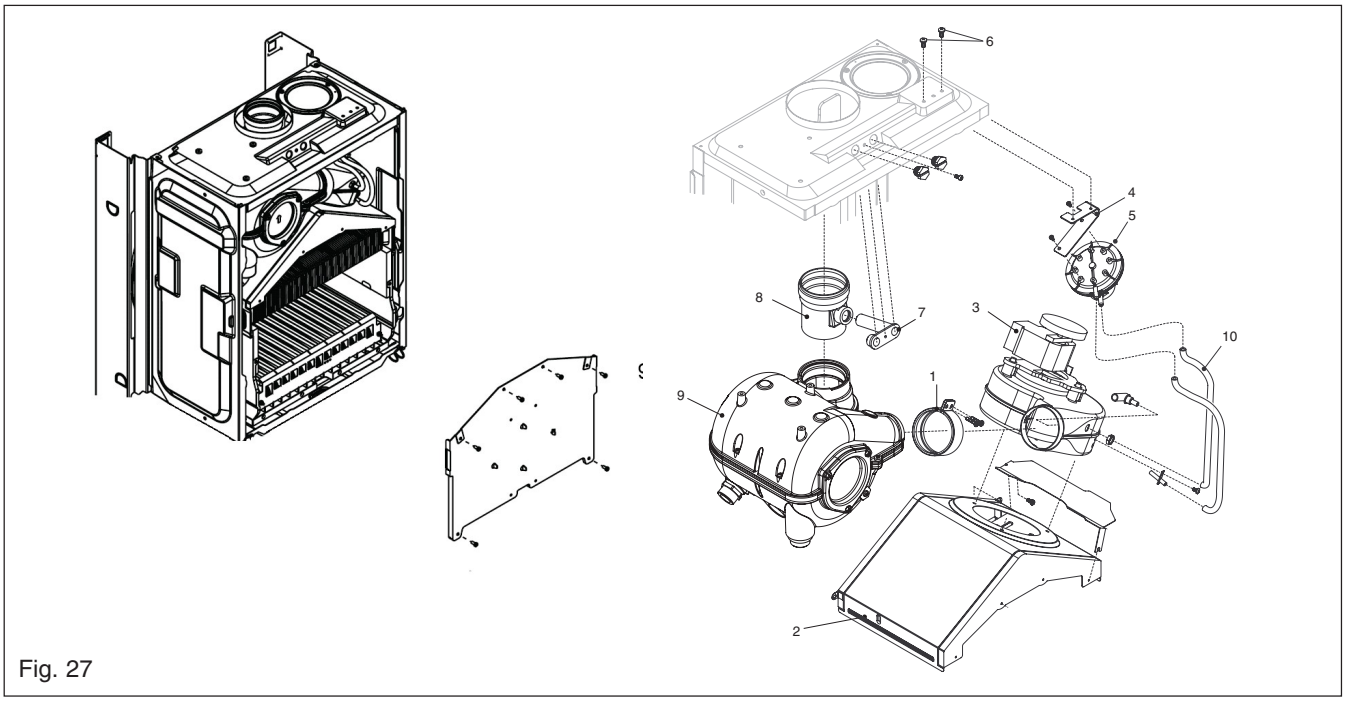

Fig. 27

6.16 FLUE FAN fig. 27

Carry out component removal procedure as described in 6.4.

Unclip and remove the air chamber cover, gently pull the cover towards you before lifting and disengaging. Locate and remove the six screws that secure the front combustion cover, then remove the cover. Disconnect the electrical connections and silicone tubes attached to the fan, noting their positions. Locate and remove the screws (6) that secure the air pressure switch assembly (4&5). Locate and remove the screws that secure the flue hood and air baffle, disconnect the flue clip (1) from the fan-flue elbow, and gently ease the fan (3) & flue hood assembly (2) from its location. Locate and remove the four screws that secure the fan to the flue hood. Remove the fan to flue elbow. Replace in the reverse order. Ensure all seals are in good condition, taking care to ensure they are replaced correctly.

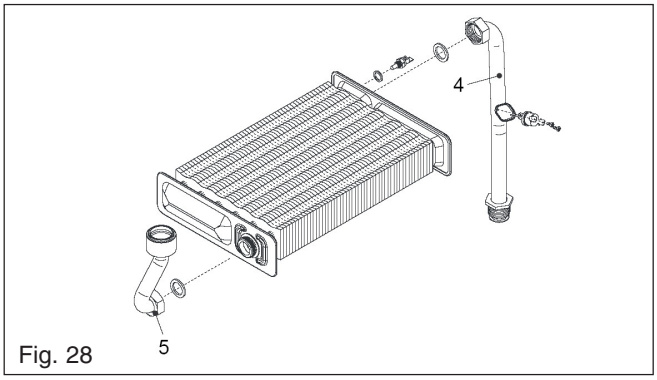

Fig. 28

6.17 MAIN HEAT EXCHANGER fig. 27/28

Carry out component removal procedure as described in 6.4.

Unclip and remove the air chamber cover, gently pull the cover towards you before lifting and disengaging. Locate and remove the six screws that secure the front combustion cover, then remove the cover. Remove the air chamber side panels if necessary by unscrewing the securing screws. Disconnect the flow and return connections (4,5, fig. 28) on the heat exchanger. The heat exchanger can now be withdrawn from the appliance. Replace in the reverse order. Ensure all seals are in good condition, taking care to ensure they are replaced correctly.

6.18 AIR PRESSURE SWITCH fig. 27

Carry out component removal procedure as described in 6.4.

Unclip and remove the air chamber cover, gently pull the cover towards you before lifting and disengaging. Locate and remove the two screws (6) holding the air pressure switch to the air chamber. Disconnect the electrical connections and silicone tubes (10) attached to the air pressure switch, noting their connections/positions. Replace in the reverse order. Ensure all seals are in good condition, taking care to ensure they are replaced correctly.

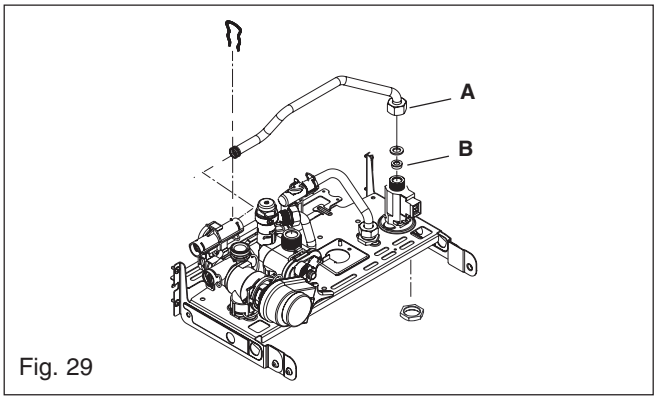

Fig. 29

6.19 FLOW RESTRICTOR fig. 29

Carry out the component removal procedure as described in 6.4.

Slacken the cold water inlet pipe (A) at the DHW flow switch and disconnect. Ease the flow restrictor (B) from its seating. Replace in the reverse order. Ensure all seals are in good condition, taking care to ensure they are replaced correctly.

6.20 DHW FLOW SWITCH fig. 29

Carry out component removal procedure as described in 6.4.

Disconnect the cold water inlet pipe (A) from the DHW flow switch. Disconnect the wiring to the DHW flow switch. Remove the locking pin from the DHW flow switch and lift the DHW flow switch from its location. Replace in the reverse order. Ensure all seals are in good condition, taking care to ensure they are replaced correctly.

6.21 DHW HEAT EXCHANGER fig. 20

Carry out component removal procedure as described in 6.4.

Before removing the DHW heat exchanger, it may be necessary to first remove the pump assembly and condense trap. Locate and remove the screws (E) that secure the heat exchanger to the DHW manifolds. Carefully remove the heat exchanger from its location taking care not to spill any residual water. Replace in the reverse order ensuring that the heat exchanger 'O' ring seals are correctly inserted into the DHW manifolds. Ensure all seals are in good condition, taking care to ensure they are replaced correctly.

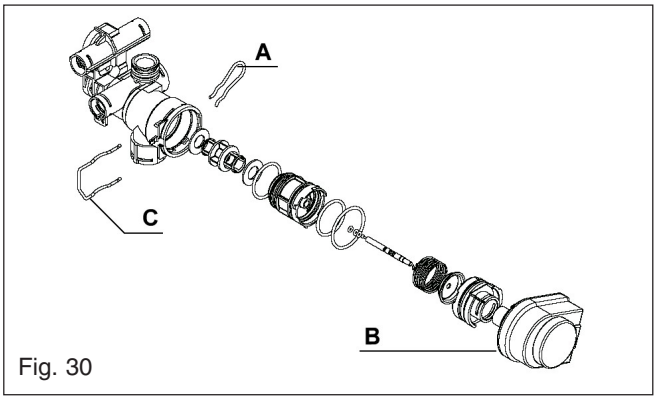

Fig. 30

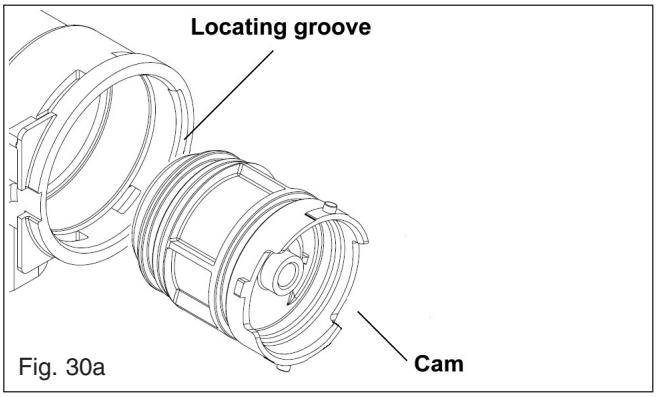

Fig. 30a

6.22 VALVE ACTUATOR fig. 30

Carry out component removal procedure as described in 6.4.

Remove the locking pin (A) that secures the actuator (B) to the hydraulic manifold. Disconnect the electrical plug from the actuator. Replace in the reverse order.

6.23 DIVERTOR VALVE CARTRIDGE fig. 30

Carry out component removal procedure as described in 6.4.

Remove the valve actuator as described in 6.22. Remove the cartridge locking pin (C) and - using a suitable pair of pliers - withdraw the cartridge assembly. The cartridge assembly is a non-serviceable item and therefore needs to be replaced if it's suspected as being damaged or worn. Replace in the reverse order ensuring that the seating cam inserts into the locating groove correctly (see fig. 30a). Ensure all seals are in good condition, taking care to ensure they are replaced correctly.

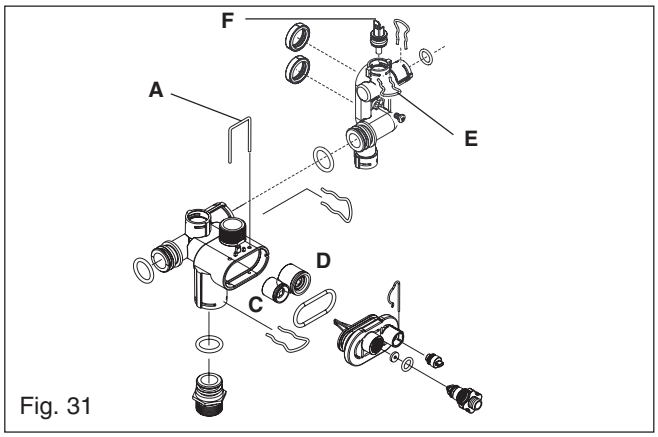

Fig. 31

6.24 DHW THERMISTOR fig. 31

Carry out component removal procedure as described in 6.4.

Disconnect the electrical plug. Using a suitable pair of pliers, remove the thermistor locking pin (E) and ease the thermistor (F) from its seating. Replace in the reverse order ensuring the sealing ring is in good condition.

6.25 AUTOMATIC BY-PASS fig. 31

Carry out component removal procedure as described in 6.4.

Locate and remove the hydraulic cover locking pin (A) and remove the cover. Using a suitable hooked wire or screwdriver, gently ease the non-return valve (C) from its seating. Ensure all seals are in good condition, taking care to ensure they are replaced correctly. Replace in the reverse order ensuring the cartridge is facing the correct way.

6.26 DHW NON-RETURN VALVE fig. 31

Carry out component removal procedure as described in 6.4.

Locate and remove the hydraulic cover locking pin (A) and remove the cover. Using a suitable hooked wire or screwdriver, gently ease the non-return valve (D) from its seating. Ensure all seals are in good condition, taking care to ensure they are replaced correctly. Replace in the reverse order ensuring the cartridge is facing the correct way.

6.27 EXPANSION VESSEL fig. 1

Should the removal and replacement of the expansion vessel be deemed impractical, an external expansion vessel may be fitted to the return pipe as close to the appliance as possible.

6.27.1 EXPANSION VESSEL REMOVAL (with sufficient clearance above)

Carry out component removal procedure as described in 6.4.

Disconnect the flue from the appliance.

Disconnect the flexible expansion pipe from the vessel. Locate and remove the four screws (A) that secure the vessel top holding plate (B), remove the plate (fig. 32). The expansion vessel can now be removed. Replace in the reverse order. Ensure all seals are in good condition, taking care to ensure they are replaced correctly.

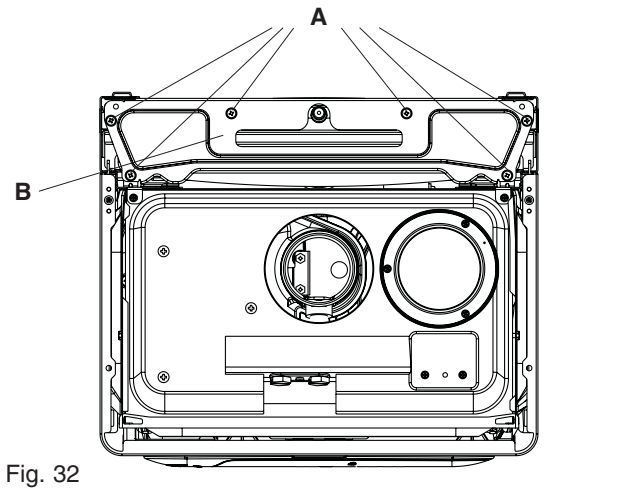

Fig. 32

6.27.2 EXPANSION VESSEL REMOVAL (with insufficient clearance above)

Carry out component removal procedure as described in 6.4.

Disconnect the flexible expansion pipe from the vessel.

Disconnect the flue elbow or pipe from the appliance flue outlet. Unclip and remove the air chamber cover, gently pull the cover towards you before lifting and disengaging. Remove the RH side panel of the air chamber. Disconnect the wiring to the fan, pressure switch, primary thermistor, overheat thermostat, condense switch & spark electrode, taking note of their locations. Carefully unclip the wires from the air chamber and withdraw the wiring & grommet from the air chamber.

Disconnect the outlet gas pipe, the flow & return pipes and the condense pipe from the air chamber.

Locate and remove the 2-screws that secure the lower section of the air chamber. Locate and remove the 2-screws that secure the upper section of the air chamber. The complete air chamber assembly can now be lifted clear from the appliance.

Locate and remove the 4-screws that secure the vessel (see fig. 32). The expansion vessel can now be removed. Replace in the reverse order. Take extreme care when refitting the wiring to the air chamber. Ensure all seals are in good condition, taking care to ensure they are replaced correctly.

6.28.1 LATENT HEAT COLLECTOR fig. 33/34/35

Carry out component removal procedure as described in 6.4.

Remove the flue hood and fan assembly as detailed in 6.16. Disconnect and remove the inlet, outlet and condense pipes from the collector. Unscrew and remove the 3 screws that secure the collector to the air chamber and disconnect the collector from the flue connection. Replace in the reverse order ensuring all seals are intact and located correctly.

6.28.2 DISMANTLING THE LATENT HEAT COLLECTOR

Apart from routine servicing or maintenance of the retarder and coil, the latent heat collector is a non-serviceable component, therefore, there is no requirement to disassemble the collector.

6.28.3 RETARDER fig. 35

Carry out component removal procedure as described in 6.4.

Unclip and remove the air chamber cover, gently pull the cover towards you before lifting and disengaging. Remove the 3-screws that secure the sealing plate and prise the plate and sealing ring from the latent heat collector. The retarder can now be removed allowing access to the heat collector coil. Replace in the reverse order ensuring all seals are intact and correctly located.

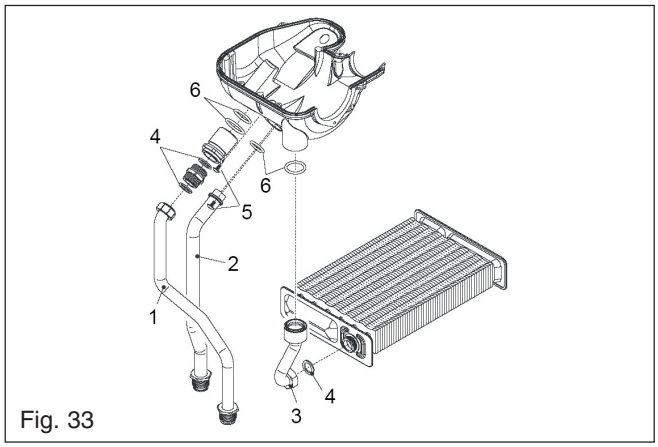

Fig. 33

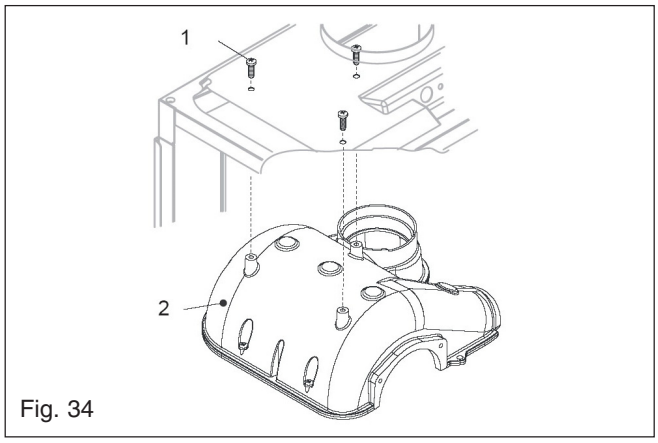

Fig. 34

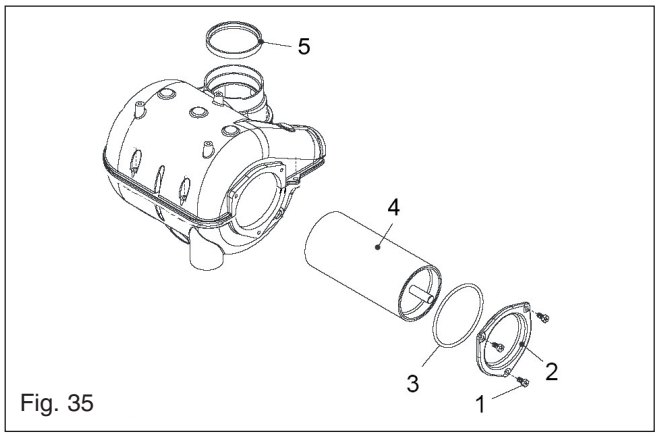

Fig. 35

6.29 CONDENSE TRAP REMOVAL fig. 36

Carry out component removal procedure as described in 6.4.

Disconnect the flexible condense pipe (1) from the condense trap. Locate and remove the condense pipe locking pin and disconnect the condense pipe (2) from the condense trap. Locate and disconnect the condense pressure switch pipe from the condense trap (3). Carefully remove the condense trap. Replace in the reverse order.

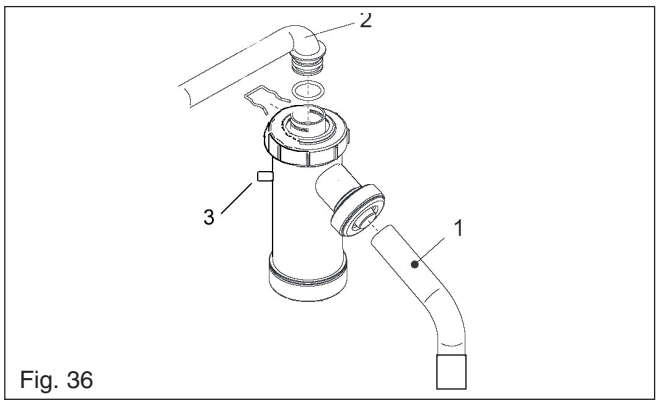

Fig. 36

SECTION 7 CHECKS, ADJUSTMENTS AND FAULT FINDING

7.1 CHECKING APPLIANCE OPERATION

When carrying out any repairs or servicing to the appliance, the relevant commissioning procedure must be undertaken to ensure the continued safe operation of the appliance. Particular attention should be made to ensure gas soundness, water soundness and the electrical integrity of the appliance.

7.2 APPLIANCE MODE OF OPERATION

NOTE

There must be sufficient system water pressure (min. 0.5 bar) to ensure the water pressure switch is activated. If there is insufficient system pressure the pump and fan will be prevented from operating.

7.2.1 SELECTOR SWITCH IN THE OFF POSITION

When the selector switch is in the OFF position, the Green LED status indicator will flash every 6-seconds to confirm the appliance is in standby mode. The divertor valve is in the DHW position. The appliance will not respond to any DHW or heating requests.

Active functions:

- frost-protection system
- pump anti-block
- valve actuator anti-block
- fan over-run.

7.2.2 SELECTOR SWITCH IN THE HOT WATER ONLY POSITION

When the selector switch is in the HW only position, the Green LED is illuminated:

- flashing every 6-seconds if no DHW request is active
- constant during a DHW request.

The divertor valve is in the DHW position. The appliance will respond to any DHW requests.

Active functions:

- frost-protection system
- pump anti-block
- valve actuator anti-block
- fan over-run.

7.2.3 SELECTOR SWITCH IN THE HEATING & HOT WATER POSITION

When the selector switch is in the heating & HW position, the Green LED is illuminated:

- flashing every 6-seconds if no Heat or DHW request is active
- constant during a heat or DHW request.

The divertor valve remains in the DHW position if no heat request is active. The appliance will respond to any heating or DHW requests.

Active functions:

- frost-protection system
- pump anti-block
- valve actuator anti-block
- fan/pump over-run.

7.2.4 APPLIANCE FUNCTIONS

- **Frost-protection:** this function is only active when there are no requests for heating or HW. When the temperature of the primary thermistor drops below 5 °C, the valve actuator will motor to the heating position, whereupon the boiler will operate on minimum power until the temperature of the primary thermistor reaches 35 °C. Thereafter the pump will over-run for 30-seconds.
- **Anti-block cycle:** when there has been no heating or HW request for 19-hours, the anti-block cycle is activated. The valve actuator will motor from the DHW position to the heating position and then motor back to the DHW position. Thereafter the pump will be activated for a period of 30-seconds.
- **Fan over-run:** should the temperature of the primary thermistor exceed 78 °C after a heating or DHW request, the pump and/or fan will run for a period of 30-seconds.
- **SARA function:** the SARA function permits the boiler (when the set-point is within the SARA range) to automatically adjust (raise) the heating flow outlet temperature should the room thermostat contacts remain closed for more that 20-minutes.

7.2.5 DHW MODE fig. 37

With the selector switch in the Heating & HW position, or HW only position and a DHW outlet is opened, the appliance will operate in the HW mode. The valve actuator will motor to the HW position (if a heating request was active) and the pump and fan will be active. The operation of the fan causes the air pressure switch to deliver a

signal voltage to the control PCB. A slow ignition sequence is enabled, whereby the current supplied to the gas valve modulating coil is progressively increased from minimum to maximum over a period of 8-seconds. During this period the ignition electrode sparks continuously even if the burner has ignited.

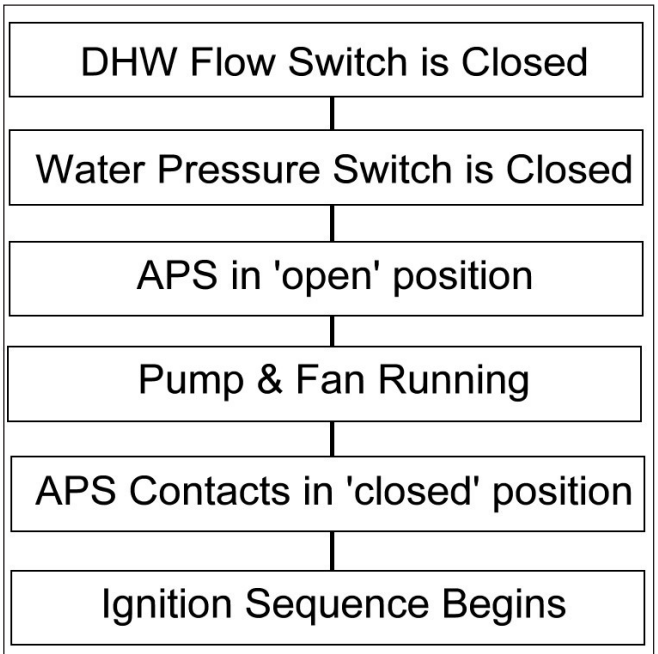

Fig. 37

NOTE

If the spark/sensing electrode does not sense ignition the appliance will then go to lockout.

Ignition is sensed by the electronic circuitry to ensure flame stability at the burner. Once successful ignition has been achieved, the electronic circuitry modulates the appliance output in order to achieve the DHW set-point (the position of the DHW temperature selector) as measured at the secondary thermistor.

When the set-point has been reached, the appliance will begin the modulation phase whereby the fan and gas valve will continuously modulate to maintain the set-point.

If the temperature continues to rise and exceeds the set-point by 5 °C, the burner will shut down until the temperature drops to set-point + 4 °C, whereby a new ignition sequence will be enabled.

When the request for DHW has been satisfied, the appliance fan may continue to operate to dissipate any residual heat from within the appliance.

7.2.5.1 DHW PARAMETERS

RANGE	MINIMUM	MAXIMUM
Temperature (°C)	37.5	60
DHW NTC fault	ON at 50 °C	OFF at 55 °C

7.2.6 HEATING MODE fig. 38

With the selector switch in the Heating & HW position and the relevant controls (time clock, room thermostat, etc,) are calling for heat, the appliance will operate in the heating mode. The valve actuator will motor to the heating position and the pump and fan will be active. The operation of the fan causes the air pressure switch to deliver a signal voltage to the control PCB. A slow ignition sequence is enabled, whereby the current supplied to the gas valve modulating coil is progressively increased from minimum to maximum over a period of 8-seconds. During this period the ignition electrode sparks continuously even if the burner has ignited.

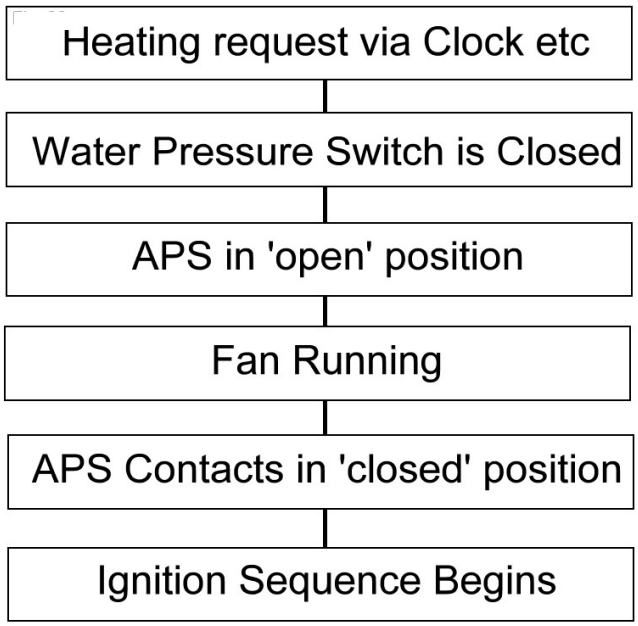

Fig. 38

NOTE

If the spark/sensing electrode does not sense ignition the appliance will then go to lockout.

Ignition is sensed by the electronic circuitry to ensure flame stability at the burner. Once successful ignition has been achieved, the electronic circuitry allows 75% of the full gas rate through the appliance. After 15 minutes the gas rate is increased to maximum (100%).

When the set-point has been reached (the position of the heating temperature selector) as measured at the primary thermistor, the appliance will begin the modulation phase whereby the fan and gas valve will continuously modulate to maintain the set-point.

If the temperature continues to rise and exceeds the set-point by 6 °C, the burner will shut down and the boiler will perform a three-minute anti-cycle (timer delay).

A new ignition sequence will be enabled when the 3-minute anti-cycle has been performed and the temperature at the primary thermistor has dropped 6 °C below the set-point.

NOTES

The timer delay can be de-activated by the insertion of a 'jumper' on the PCB at JP1 or by isolating the appliance from the electrical supply for 30 seconds.

Any DHW requests will always have priority over a heating request.

When the request for heating has been satisfied, the appliance pump and fan may continue to circulate to dissipate any residual heat within the appliance.

7.2.6.1 HEATING PARAMETERS

RANGE	MINIMUM	MAXIMUM
Temperature (°C)	40	80
1ST sector	40	55
SARA sector	55	65
2ND sector	65	80

When the boiler is operating in the SARA range, the Green LED flashes rapidly to signify the SARA function is active.

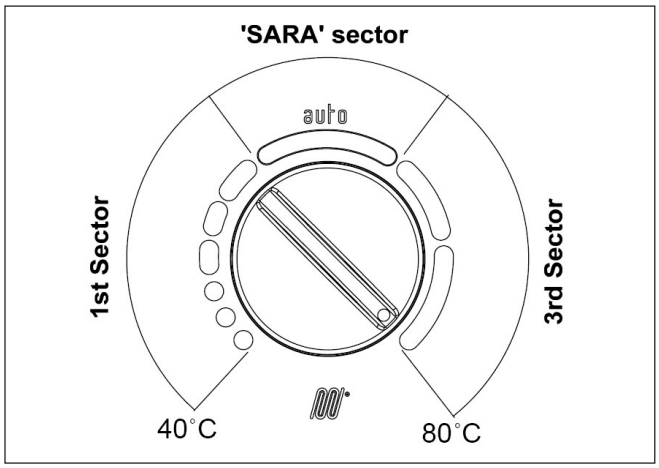

SARA FUNCTION

When the heating temperature selector is set within the SARA range (SARA sector) the boiler will automatically raise the heating flow outlet temperature by 5 °C every 20-minutes that the room thermostat contacts remain in the closed position or until the boiler reaches the maximum operating temperature.

7.3 CHECKING AND ADJUSTING BURNER PRESSURE (see fig. 19)

Although the burner pressure is factory set, it is necessary to check it during servicing or if the gas valve has been removed.

Isolate the appliance from the electrical supply and attach a suitable manometer to the gas valve outlet test nipple.

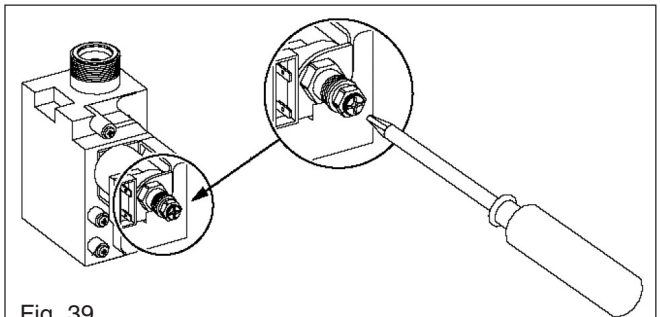

Fig. 39

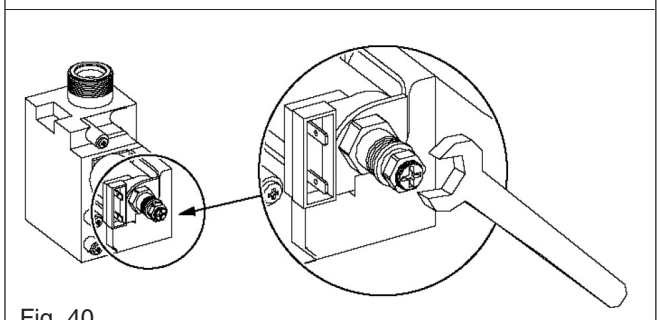

Fig. 40

7.3.1 SETTING THE MAXIMUM BURNER PRESSURE fig. 40

Light the boiler as described in 5.7 and compare the reading on the manometer with the value described in 2.3. If adjustment is required, remove the protective cap from the gas valve modulating coil assembly and turn the outer (10mm) nut clockwise to increase, or counter-clockwise to decrease the burner pressure.

NOTE

Always check and/or adjust the minimum and maximum gas pressures whilst the appliance is in the HW only mode. Ensure a DHW outlet (preferably the bath) is fully open, and that the HW temperature selector is at maximum.

7.3.2 SETTING THE MIMIMUM BURNER PRESSURE fig. 39

Once the maximum burner pressure has been checked and/or adjusted, remove one of the grey wires from the modulating coil. Compare the reading on the manometer with the value described in 2.3. If adjustment is required, turn the inner (red) crosshead screw clockwise to increase, or counter-clockwise to decrease the burner pressure, whilst ensuring that the outer (10mm) nut does not move. When checking and/or adjustment has been completed, isolate the appliance from the electrical supply, replace the protective cap, refit the grey wire to the modulating coil, remove the manometer and tighten the outlet test nipple.

IMPORTANT, A GAS SOUNDNESS CHECK MUST BE CARRIED OUT.

7.3.3 SETTING THE MINIMUM CENTRAL HEATING OUTPUT

THIS CAN ONLY BE CARRIED OUT AFTER THE MAXIMUM AND MINIMUM GAS PRESSURES HAVE BEEN SET.

- Isolate the appliance from the electrical supply.
- Attach a manometer to the gas valve outlet test nipple.
- Insert a jumper tag at JP2.
- Switch the appliance ON in the heating mode.
- Turn potentiometer P5 to the minimum position
- Adjust potentiometer P4 to the required value shown in section2.3 (section 10.2 for LPG), i.e. minimum burner pressure (central heating).
- Turn potentiometer P5 back to the maximum position.
- Isolate the appliance from the electrical supply.
- Remove the manometer, tighten the outlet test nipple, and check for soundness.

7.4 COMBUSTION ANALYSIS TEST

A combustion analysis check can easily be carried out on the appliance via the test points located on the top of the appliance, however you must check that the burner pressures are set correctly (see 7.3).

- Isolate the appliance from the electrical supply and turn the mode selector switch to the **OFF/RESET** position.
- Locate and remove the CO test point sealing screw (see fig. 41).
- Insert the flue gas analyser probe into the test point.
- Restore the electrical supply to the appliance
- Remove the mode selector knob and turn the shaft fully clockwise (see fig. 42).

- The boiler will now enter the combustion analysis mode (CO mode) for a period of 15 minutes, signified by the LED flashing Yellow. During this time, the boiler will remain on full gas.
- Once the flue gas analysis has been made, turn the shaft back to the required position and replace the mode selector knob.
- Remove the probe and replace the sealing screw.

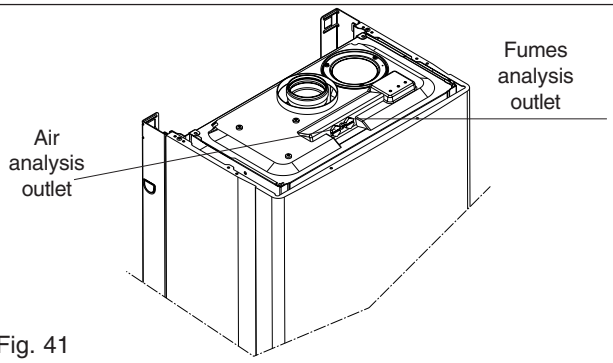

Fig. 41

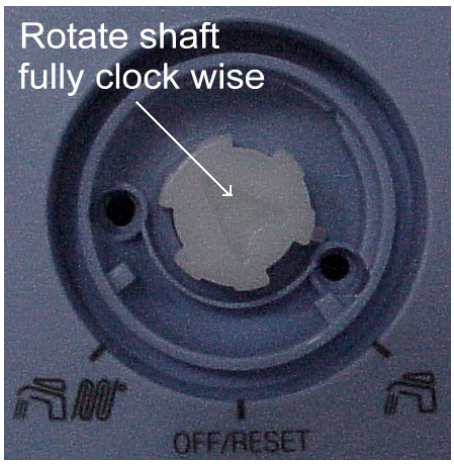

Fig. 42

7.5 CHECKING THE EXPANSION VESSEL

Carry out the component removal procedure as described in 6.4. You must ensure that the boiler is completely drained of water.
Using a suitable pressure gauge, remove dust cap on expansion vessel and check the charge pressure. The correct charge pressure should be 1.0 bar ± 0.1 bar.
If the charge pressure is less, use a suitable pump to increase the charge.

NOTE
You must ensure the drain valve is in the open position whilst re-charging takes place. Replace the dust cap and carry out the relevant commissioning procedure (section 5).

7.6 EXTERNAL FAULTS

Before carrying out any faultfinding or component replacement, ensure the fault is not attributable to any aspect of the installation.

7.6.1 INSTALLATION FAULTS

Symptom	Possible causes
No ignition	Check wiring Check electrical supply
No hot water	Check hot/cold pipe work is not reversed
No central heating	Check wiring of room thermostat and/or other external controls

GREEN LED

Frequency	Faults/Status
ON every 6-secs	At stand-by with no faults
Flashing 8-times a second	SARA function active
ON every 0.5-secs	Temporary fault, e.g.: ● APS fault ● low water pressure
Solid	Active for heat/DHW request

YELLOW LED

Frequency	Faults/Status
ON every 0.5-secs	CO function active
Solid	DHW thermistor fault (see 7.2.5.2)

RED LED

Frequency	Faults/Status
ON every 0.5-secs	Final fault, e.g.: ● water pressure switch ● condense pressure switch ● fan/flue problem ● limit thermostat
Solid	● primary NTC open/short circuit

7.7 ELECTRICAL CHECKS

Any electrical checks must be carried out by a suitably qualified person.

7.7.1 EARTH CONTINUITY TEST

Isolate the appliance from the electrical supply, and using a suitable multi-meter carry out a resistance test. Connect test leads between an appliance earth point and the earth wire of the appliance supply cable. The resistance should be less than 1 OHM. If the resistance is greater than 1 OHM check all earth wires and connectors for continuity and integrity.

7.7.2 SHORT CIRCUIT CHECK

Isolate the appliance from the electrical supply, and using a suitable multi-meter, carry out a short circuit test between the Live & Neutral connections at the appliance terminal strip (fig.16).
Repeat above test on the Live & Earth connections at the appliance terminal strip (fig.16).

NOTE
Should it be found that the fuse has failed but no fault is indicated, a detailed continuity. Check will be required to trace the fault. A visual inspection of components may also assist in locating the fault.

7.7.3 POLARITY CHECK

With the appliance connected to the electrical supply and using a suitable multimeter, carry out the following voltage tests:

- Connect test leads between the Live & Neutral connections at the appliance terminal strip (fig.16). The meter should read approximately 230V ac. If so proceed to next stage. If not, see 7.7.4.
- Connect test leads between the Live & Earth connections at the appliance terminal strip (fig.16). The meter should read approximately 230V ac. If so proceed to next stage. If not, see 7.7.4.
- Connect test leads between the Neutral & Earth connections at the appliance terminal strip (fig.16). The meter should read approximately 0 - 15Vac. If so polarity is correct. If not, see 7.7.4.

7.7.4 REVERSED POLARITY OR SUPPLY FAULT

Repeat the above tests at the appliance isolator, if testing reveals correct polarity and/or supply at the isolator, re-check wiring and connections between the isolator and the appliance.

If tests on the isolator also reveal reversed polarity or a supply fault, consult the local electricity supplier for advice.

7.7.5 RESISTANCE TO EARTH CHECK

Isolate the appliance from the electrical supply and using a suitable multi-meter carry out a resistance test. Connect test leads between the Live & Earth connections at the appliance terminal strip (fig.16). If the meter reads other than infinity there is a fault that must be isolated, carry out a detailed continuity check to identify the location of the fault.

IMPORTANT

These series of checks must be carried out before attempting any faultfinding procedures on the appliance. On completion of any task that required the disconnection and re-connection of any electrical wiring or component, these checks must be repeated.

7.8 FAULT FINDING

Before attempting any faultfinding, the electrical checks as detailed in 7.7 must be carried out.

Isolate the appliance from the electrical supply. Disconnect any external controls such as room thermostats etc. from the boiler.

7.8.1 REPLACING THE MAIN PCB

When replacing the main PCB it's essential that the potentiometers are set as follows:

- It's essential that the minimum - central heating - gas pressure is checked/adjusted as described in 7.3.3
- **P4** - to be used to set/adjust the minimum heating output
- **P5** - set at maximum.

EFFECT OF JUMPER TAGS FITTED TO THE MAIN PCB AT:

- **JP1** - disables DHW function
- **JP2** - cancels anti-cycle function and initial heating output (75% of maximum at start up)
- **JP3** - for LPG boilers only
- **JP4** - enables DHW temperature stabiliser function (boiler modulates at set point and remains on minimum power, even if the set point is exceeded).

NOTE

If the Vokera remote-control (RC05) is connected to the appliance, it should be disconnected during any faultfinding checks.

Restore the electrical supply to the boiler and turn the selector switch to the on position. The boiler should now function as described in section 7.2. Should the boiler fail to respond, the internal fuses and connectors should be checked to ensure integrity and continuity. If the boiler still fails to respond, refer to the detailed faultfinding flowcharts overleaf.

7.9 FAULT CODES

When the boiler is in a fault condition, the LED is displayed in a colour and/or frequency that is relevant to the fault. To reset the boiler, turn the mode selector switch to the reset position (0) for 2-minutes' then back to the relevant mode of operation.

If the boiler does not reset, refer to the following section and the detailed faultfinding flowcharts overleaf.

YELLOW LED

Frequency	Faults/Status
ON every 0.5-secs	CO function active
Solid	DHW* thermistor fault (see 7.2.5.2)

* *When there is a fault condition with the DHW thermistor, the appliance will still operate and produce limited hot water. The Primary thermistor will control the temperature of the DHW during this period and the outlet temperature is fixed at 50-55°C.*

RED LED

Frequency	Faults/Status
ON every 0.5-secs	Final fault, e.g.: • water pressure switch • condense pressure switch • fan/flue problem • limit thermostat
Solid	• primary NTC open/short circuit

7.10.1 FAULT FINDING TEST 'A': CHECKING OPERATION OF ELECTRONIC CONTROL BOARD AT START UP

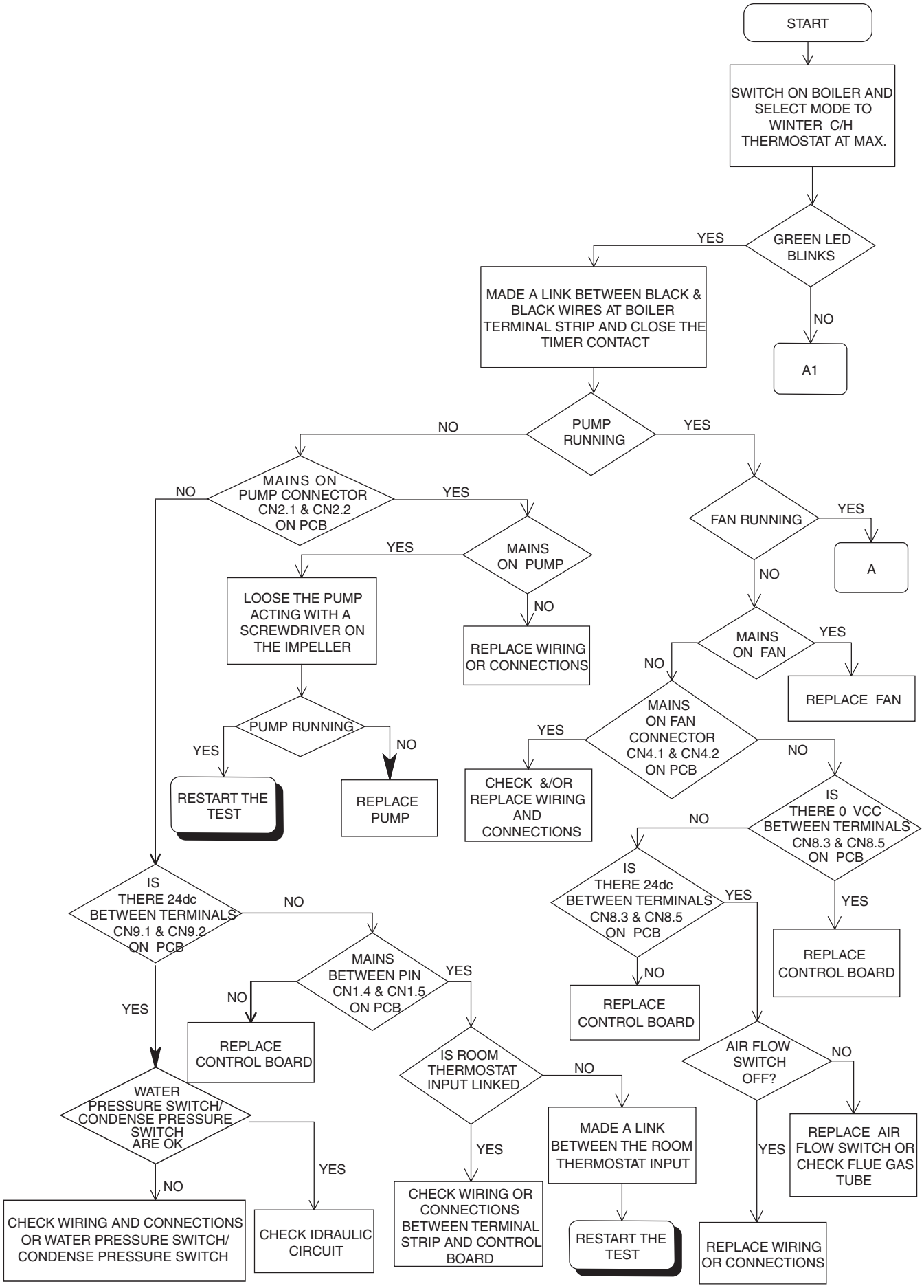

7.10.2 FAULT FINDING TEST 'A'

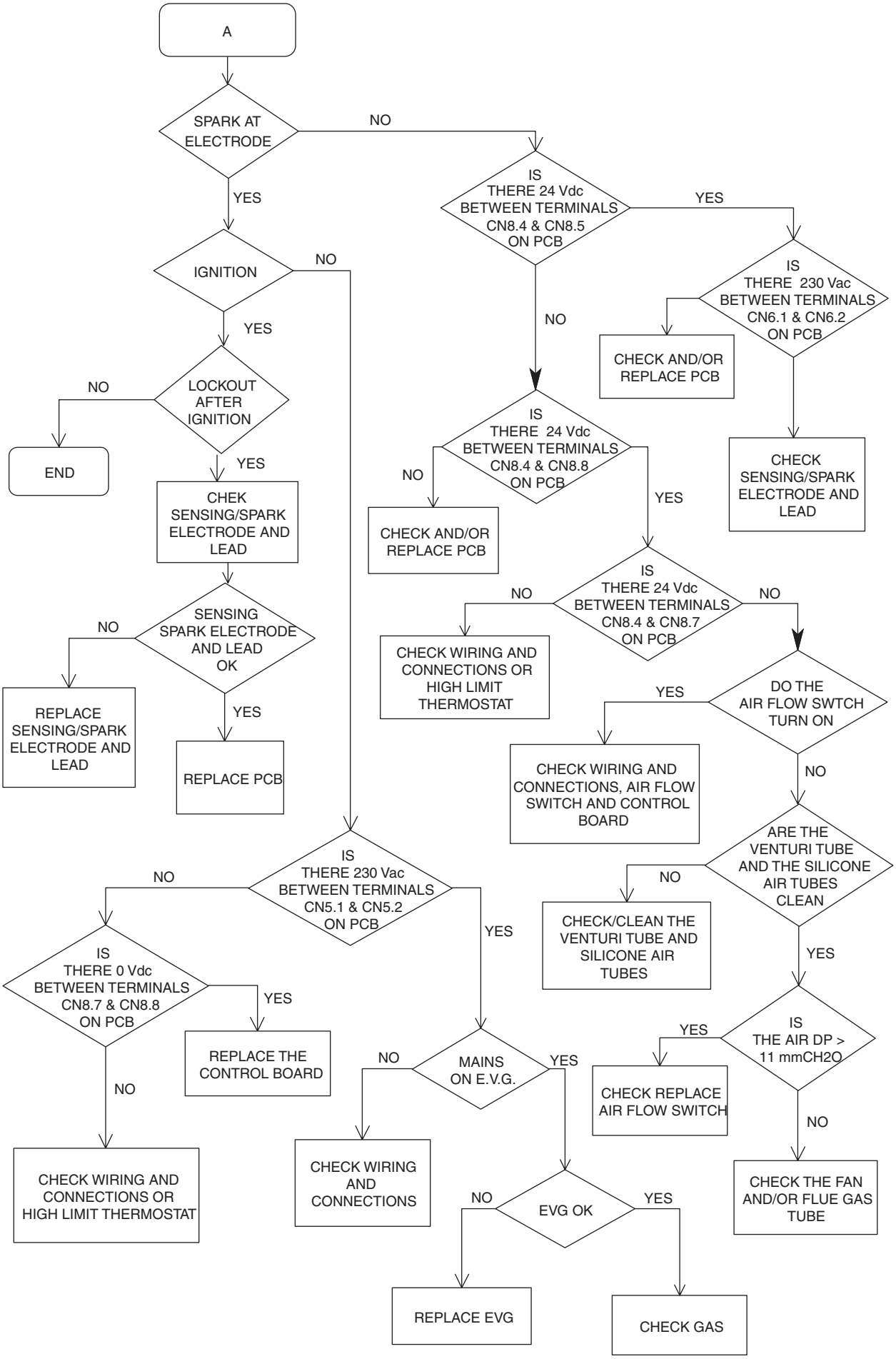

7.10.3 FAULT FINDING TEST 'A1'

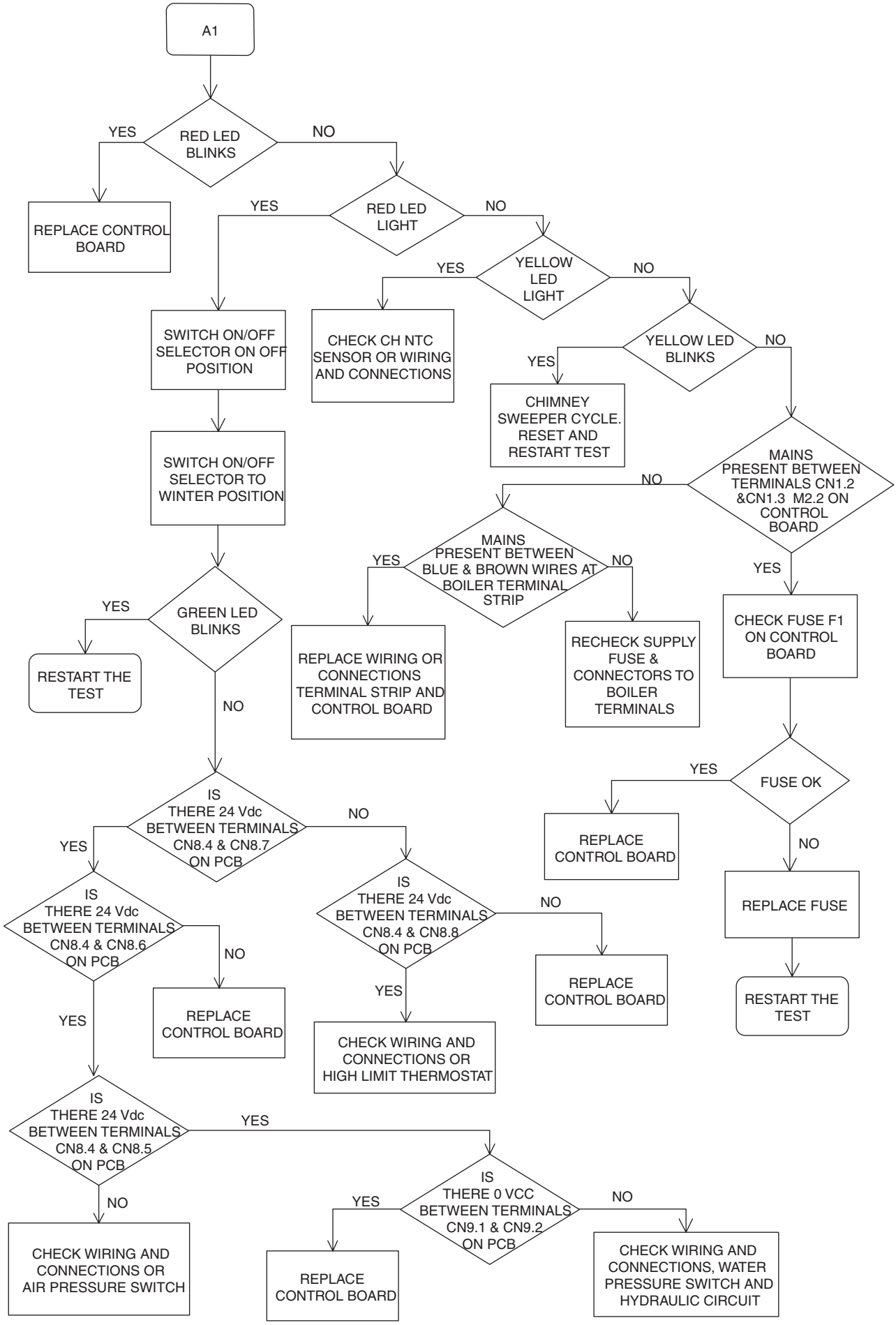

7.10.4 FAULT FINDING TEST 'B2': CHECK CONTROL IN DHW MODE

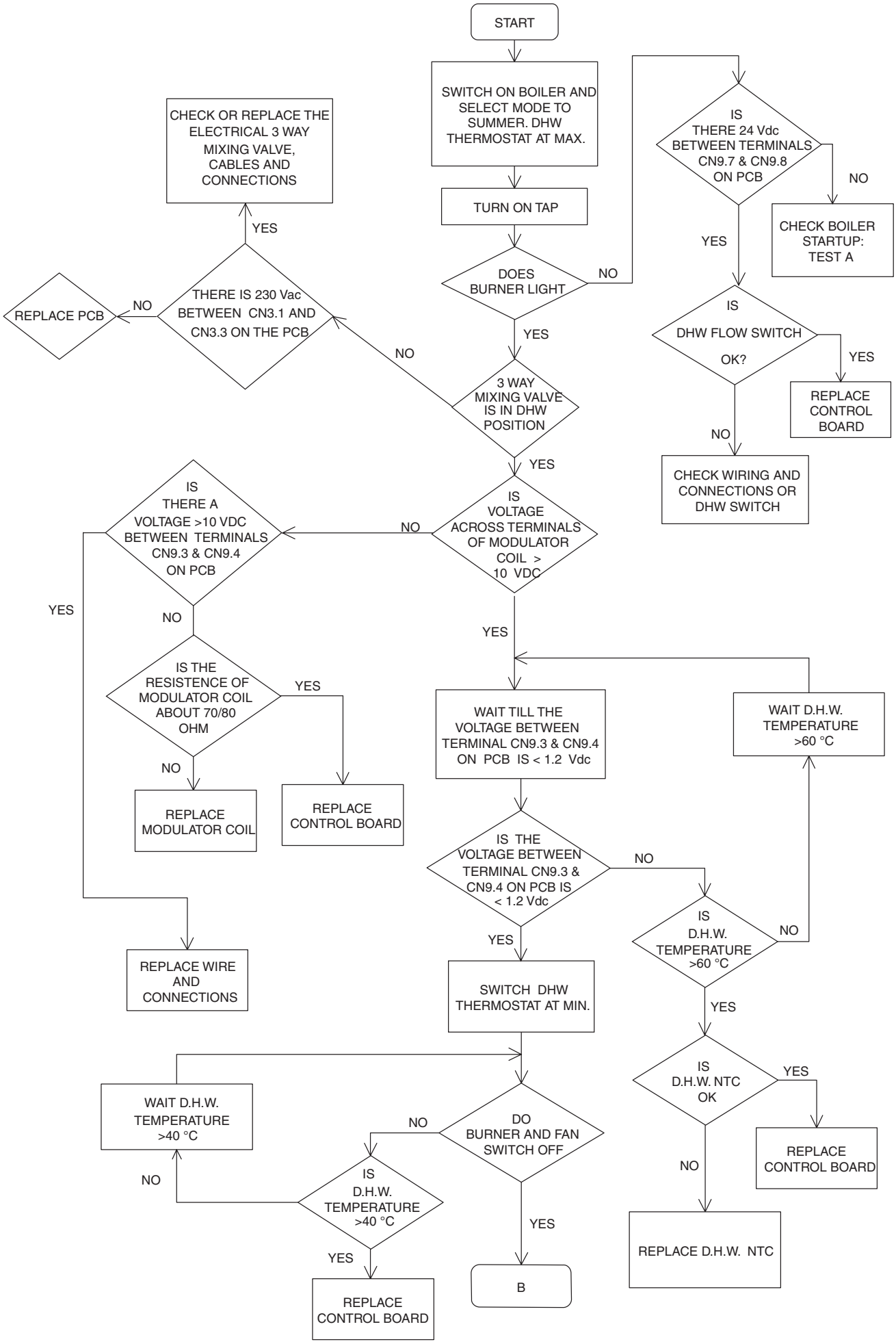

7.10.5 FAULT FINDING TEST 'C': CHECK CONTROL IN C/H MODE

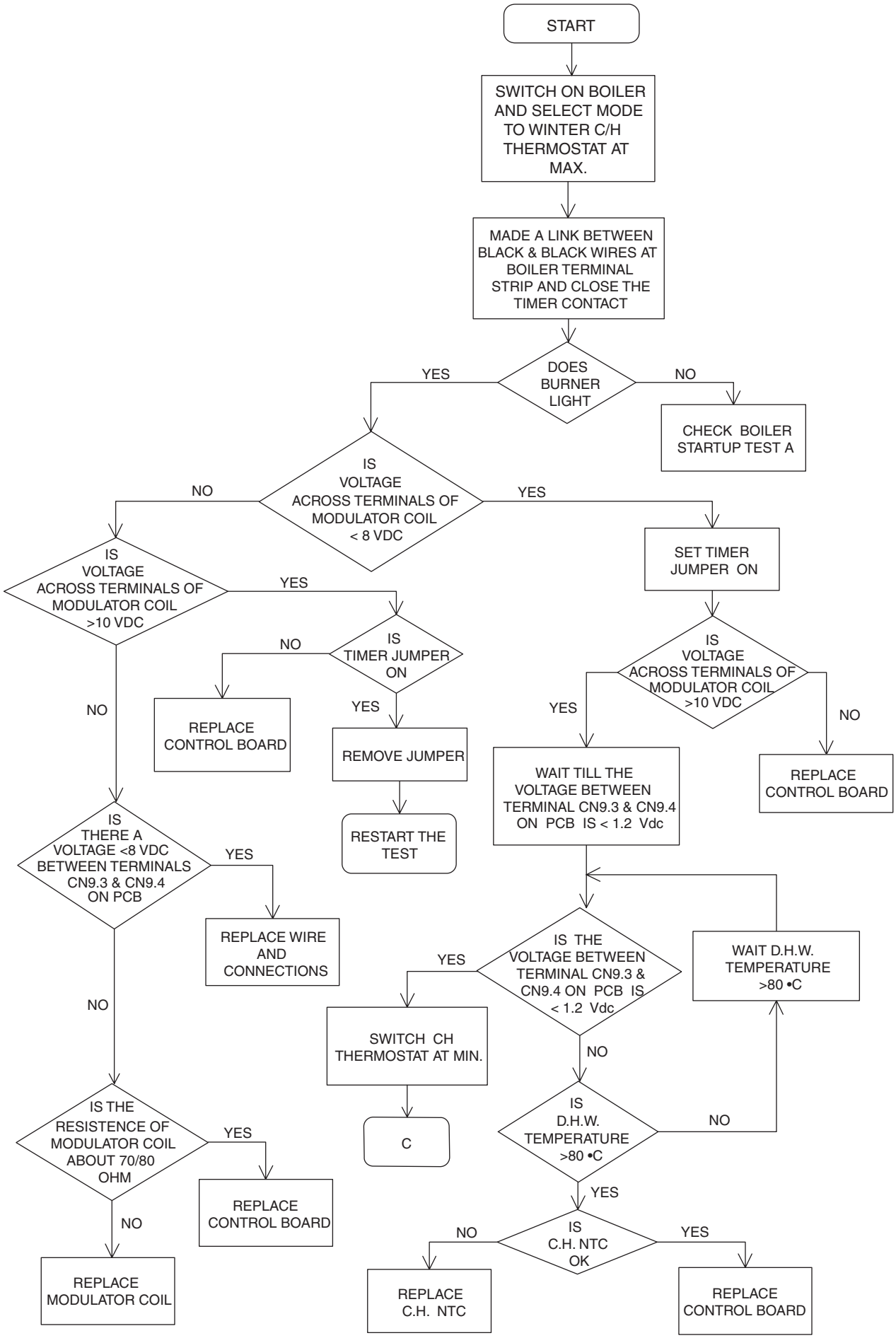

7.10.6 TEST 'C' CONT'D

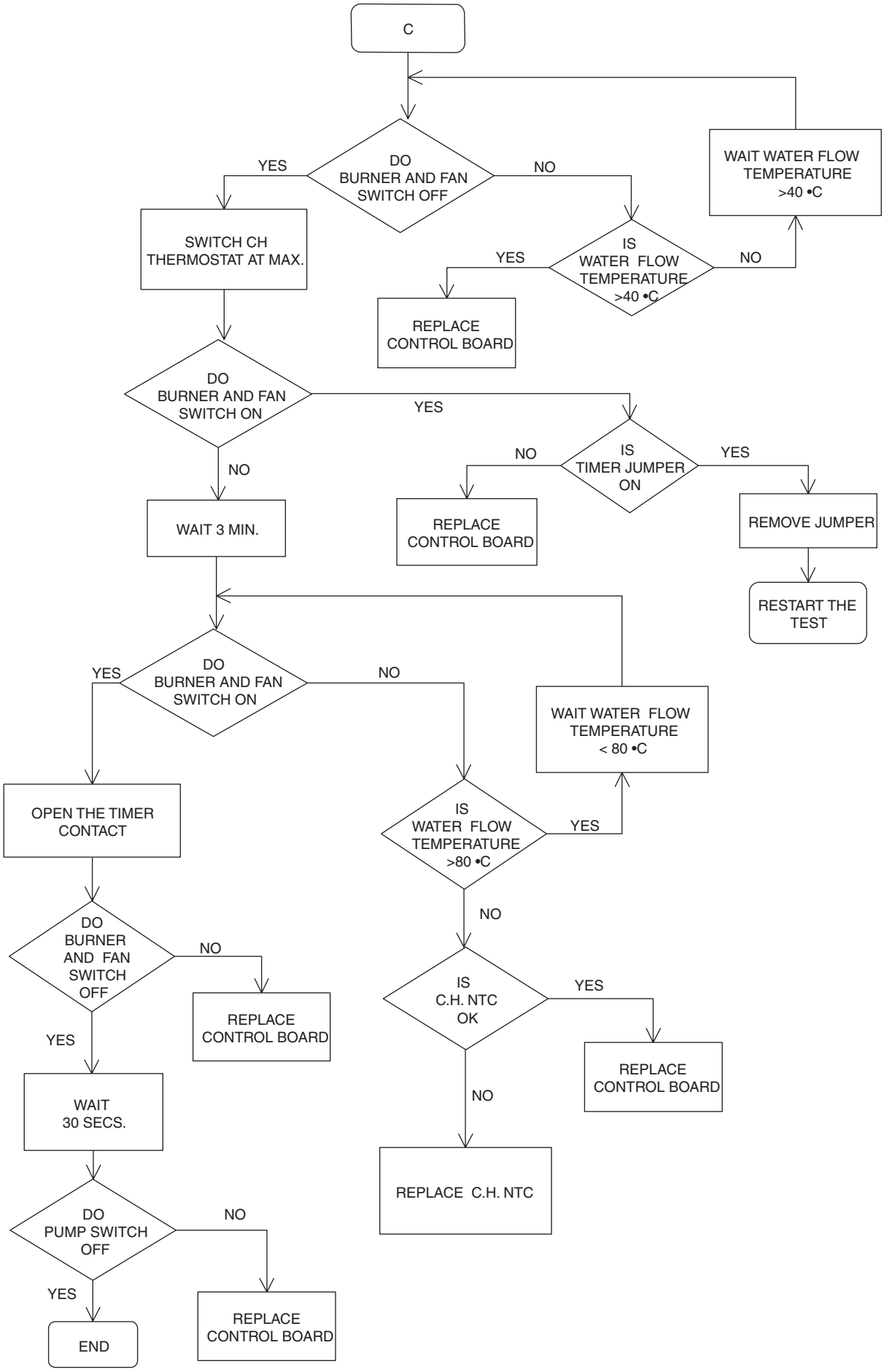

8.1 EXTERNAL WIRING

The appliance comes with a factory fitted clock to allow basic operation of the boiler (fig. 43). If external controls are to be added to the system, they must be connected to the appliance as shown in the following diagrams. For advice on controls that are not featured in this book, please contact Vokera technical on 0870 333 0520.

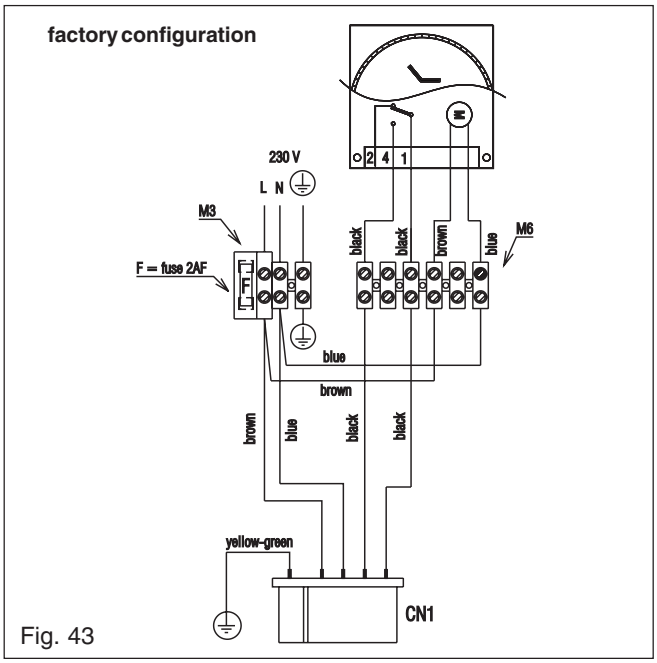

Fig. 43

8.2 TYPICAL CONTROL APPLICATIONS

The appliance can be used with the following controls:

- Vokera RC05 remote control (part no. 405) and Compact interface (part no. 409)
- Vokera external sensor (must be used in conjunction with the RC05), (part no. 2359259)
- external single-channel, voltage-free time clocks
- programmable room thermostats.

In addition, the appliance can be used in conjunction with a typical 'S'-Plan system, please contact Vokera technical for further detailed instruction.

NOTE

This appliance is not suitable for use with 'Y'-Plan systems.

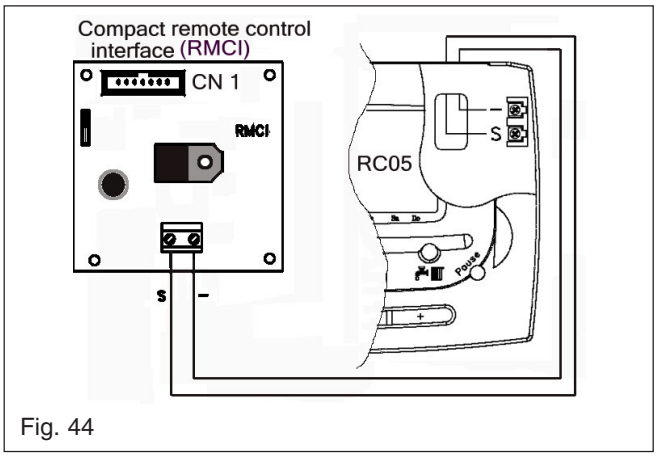

Fig. 44

8.3 VOKERA REMOTE CONTROL

The RC05 remote control must be connected to the appliance as shown in fig. 44. The RC05 can be used in 3-modes:

- **Boiler only control,** whereby the RC05 controls only the functions of the appliance (Heating & DHW temperature, reset function, fault code display, etc).
- **Boiler control with room thermostat function,** whereby the RC05 controls the functions of the appliance (Heating & DHW temperature, reset function, fault code display, etc) and also functions as a room thermostat.
- **Boiler control with programmable room thermostat,** whereby the RC05 controls the functions of the appliance (Heating & DHW temperature, reset function, fault code display, etc) and also functions as a programmable room thermostat.

NOTE

If the RC05 is used in the "boiler only" mode, an additional control (such as the integral clock) will be required to switch the heating terminals.

Full details of the operation of the RC05 and its functions can be found in the installations and users instructions of the RC05.

8.4 ROOM THERMOSTAT

Should a room thermostat be required, it must be of the 'voltage-free' type, and should be connected to the appliance as shown in fig. 45.

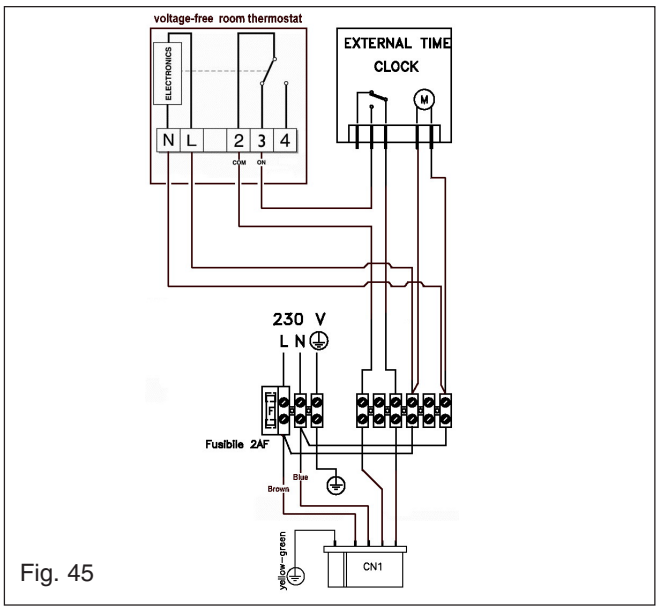

Fig. 45

8.5 OTHER CONTROLS

Contact the controls manufacturer and/or Vokera technical department should you require more specific information on the suitability of a particular control.

Further guidance on the recommended practice for the installation of external controls, can be found in CHeSS - HC5/HC6 (www.energy-efficiency.gov.uk).

FUNCTIONAL DIAGRAM

NOTE: L-N-E CONNECTION IS ADVISABLE

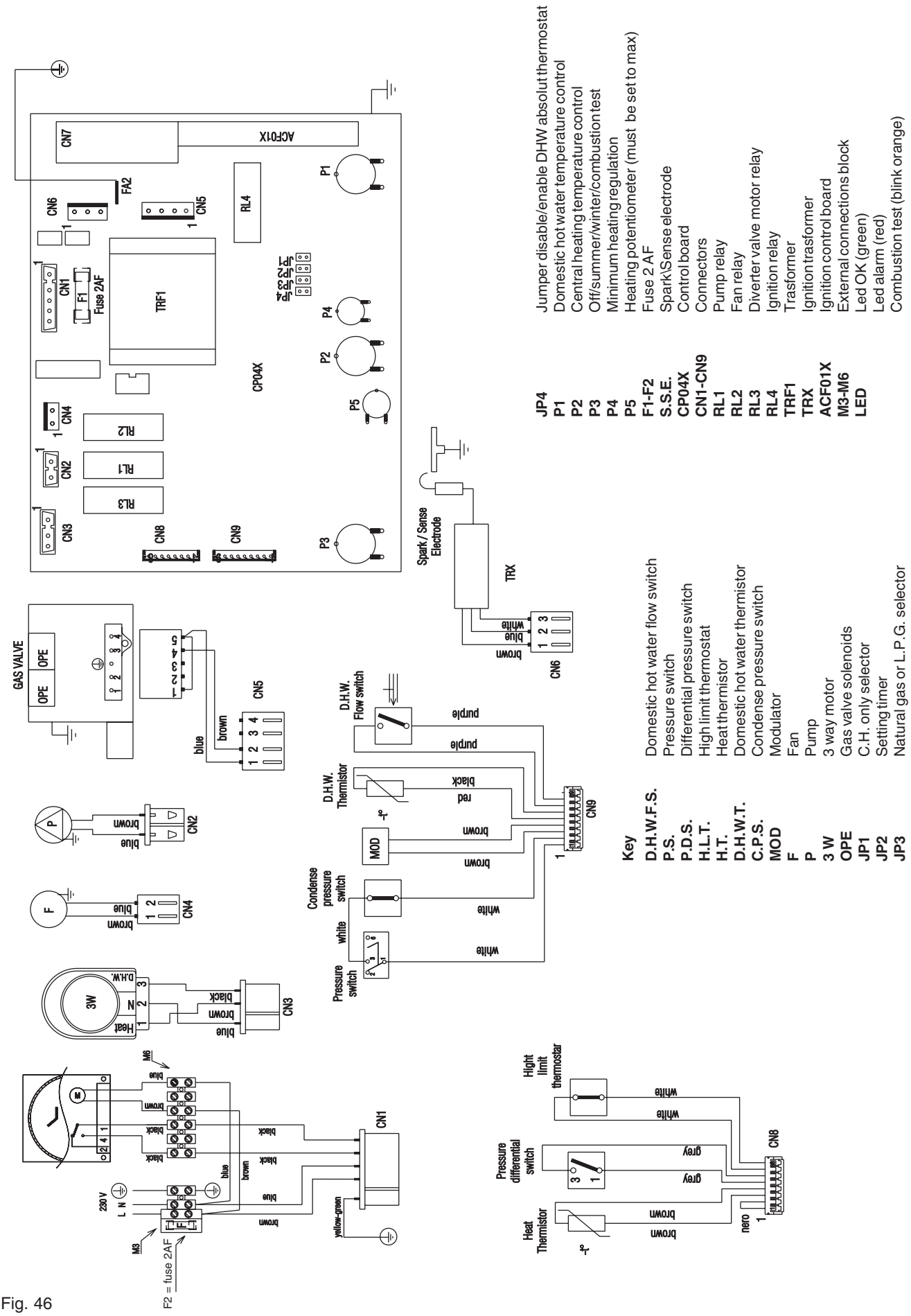

Fig. 46

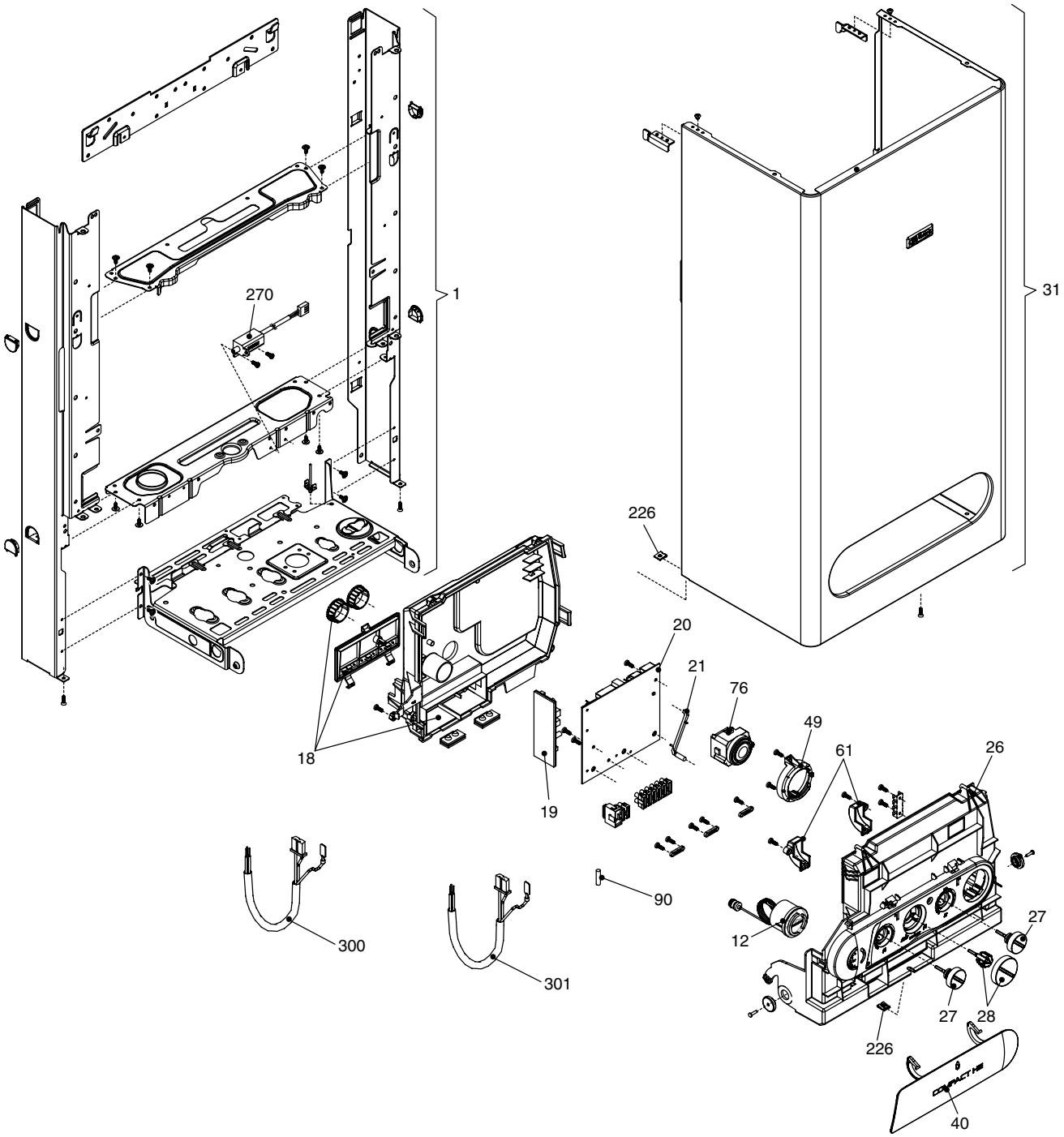

POS.	DESCRIPTION	25 HE	29 HE
1	Frame assembly	01005403	01005406
12	Pressure gauge	10024019	10024019
18	Cover assembly	10026475	10026475
20	Printed Circuit Board	10025340	10025340
21	Led light guide	10023816	10023816
26	Instrumental panel	10027547	10027547
27	Control knob	10023937	10023937
28	Selection knob	10023936	10023936
31	Case	10026164	10026179
40	Instrumental panel cover	10027549	10027549
49	Adapter	10023935	10023935
61	Cover assembly	01005404	01005404
76	Timer	10023938	10023938
90	Fuse	3478	3478
226	Edge clip	5128	5128
270	Transformer	10021272	10021272
300	Wiring harness (clock)	10023840	10023840
301	Wiring harness (clock)	10023940	10023940

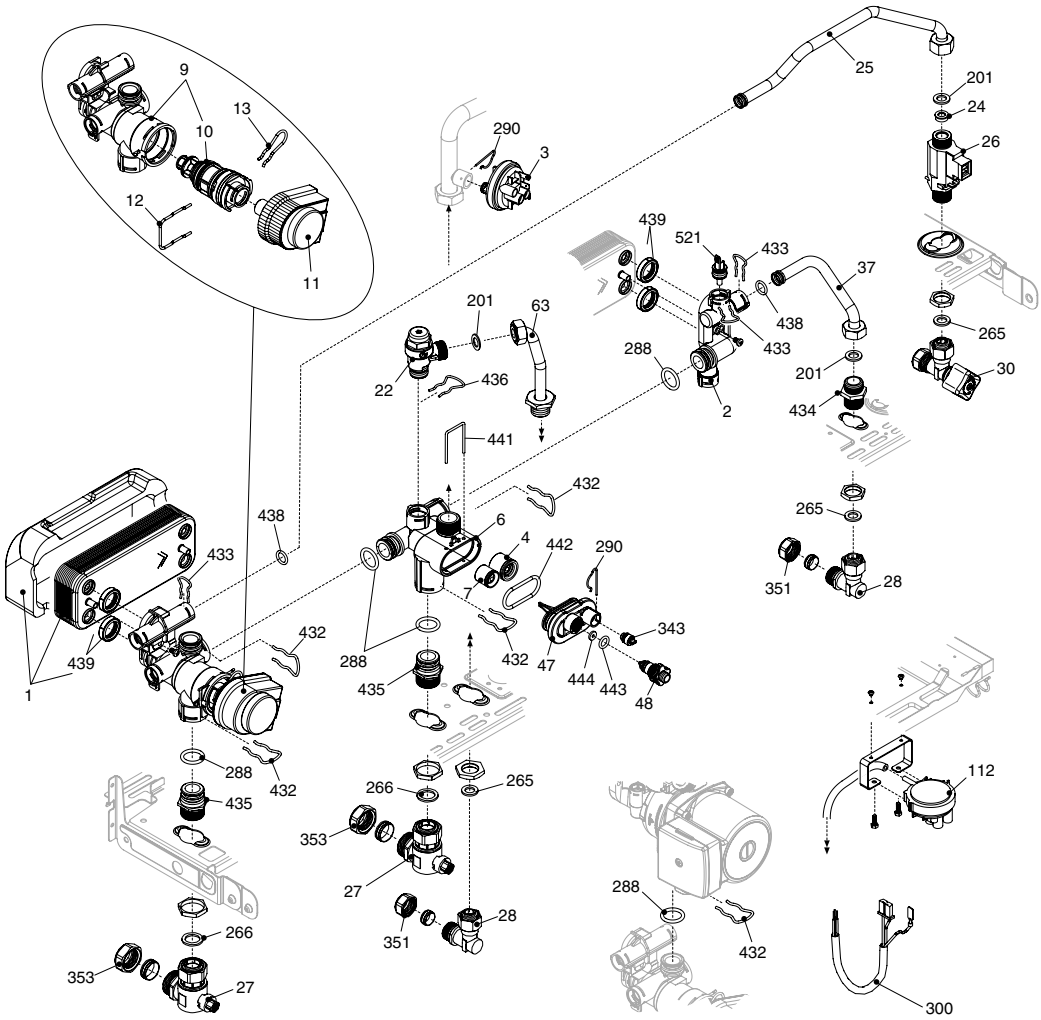

POS.	DESCRIPTION	25 HE	29 HE
1	Domestic water heat exchanger	8036	8037
2	Connection	10024640	10024640
3	Pressure switch	2044	2044
4	Non return valve	10025056	10025056
6	By-pass casing	10024641	10024641
7	By-pass valve	2047	2047
9	Heating manifold and cartridge	10026508	10026508
10	3 way valve cartridge	10025305	10025305
11	Motorized valve	10025304	10025304
12	Fixing fork wrench	10025450	10025450
13	Fixing fork wrench	10025449	10025449
22	Safety valve	10025055	10025055
24	Flow governor	10026043	10024987
25	Pipe	10027544	10027544
26	DHW actuator	10022349	10022349
27	Heating cock	1789	1789
28	Connection	1790	1790
30	Heating cock	7099	7099
37	Pipe	10025840	10025840
47	By-pass casing cover	10024643	10024643
48	Discharge cock	10024646	10024646
63	Pipe	10026228	10026228
112	Pressure switch	10027535	10027535
201	Washer	5026	5026
265	Washer	5236	5236
266	Washer	5237	5237
288	Washer	6898	6898
290	Clip	2165	2165
351	Nut	1823	1823
353	Nut	1824	1824
432	Clip	10024958	10024958
433	Clip	10024986	10024986
434	Nipple	10024985	10024985
435	Connection	10025059	10025059
436	Clip	10025062	10025062
438	O-Ring	10024988	10024988
439	Washer	10025067	10025067
441	Clip	10025063	10025063
442	O-Ring	10025065	10025065
443	O-Ring	10025064	10025064
444	Washer	10025066	10025066
521	NTC sensor (red O-Ring)	10027351	10027351
600	Wiring harness (PCB + ground faston frame, ground faston floz switch pump diverter valve H20 pressure switch condense, pressure switch gas valve (modulator + safety coils) DHW NTC)	10027558	10027558

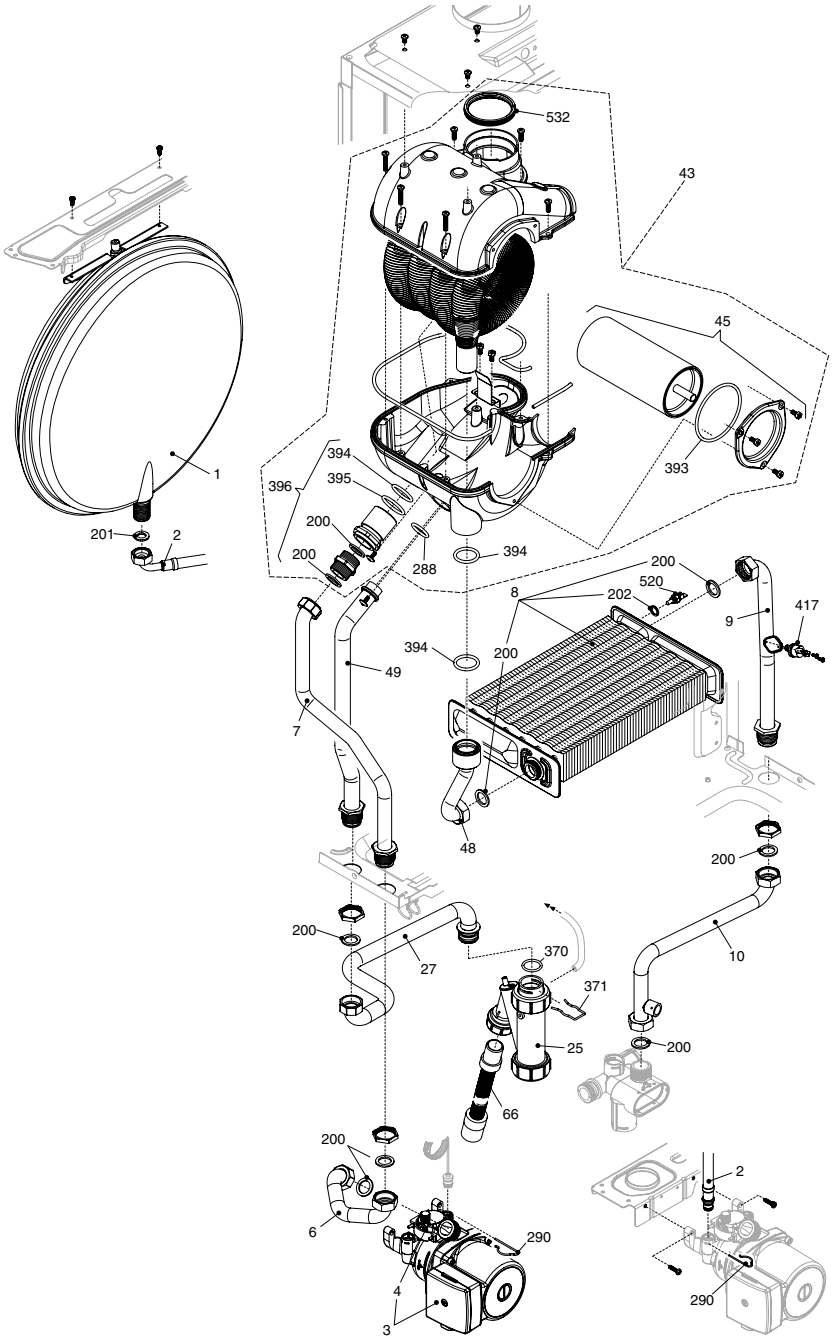

POS.	DESCRIPTION	25 HE	29 HE
1	Expansion vessel	2204	2573
2	Flexible pipe	10025188	10025188
3	Circulation pump	10027571	10027571
4	Automatic air vent bottle	10025485	10025485
6	Pipe	10027541	10027566
7	Pipe	10024312	10024130
8	Heat exchanger	2381	2378
9	Pipe	10021041	10021041
10	Pipe	10027542	10027567
25	Siphon	10027546	10027546
27	Pipe	10027543	10027568
43	Condensing unit assembly	01005291	01005291
45	Retarder	10024136	10024136
48	Pipe	10024311	10024129
49	Pipe	10024313	10024313
66	Flexible pipe	10027545	10027545
200	Washer 24 x 17	5023	5023
201	Washer 18,5 x 11	5026	5026
202	Washer	5041	5041
288	O-Ring	6898	6898
290	Clip	2165	2165
314	Connection	2186	2186
370	O-Ring	10023533	10023533
371	Clip	10023532	10023532
393	O-Ring	10024141	10024141
394	O-Ring	10024142	10024142
395	O-Ring	10024143	10024143
396	Connections kit	01005292	01005292
417	Limit thermostat	10024710	10024710
520	NTC sensor (red O-Ring)	10027352	10027352
532	Washer	10027540	10027540

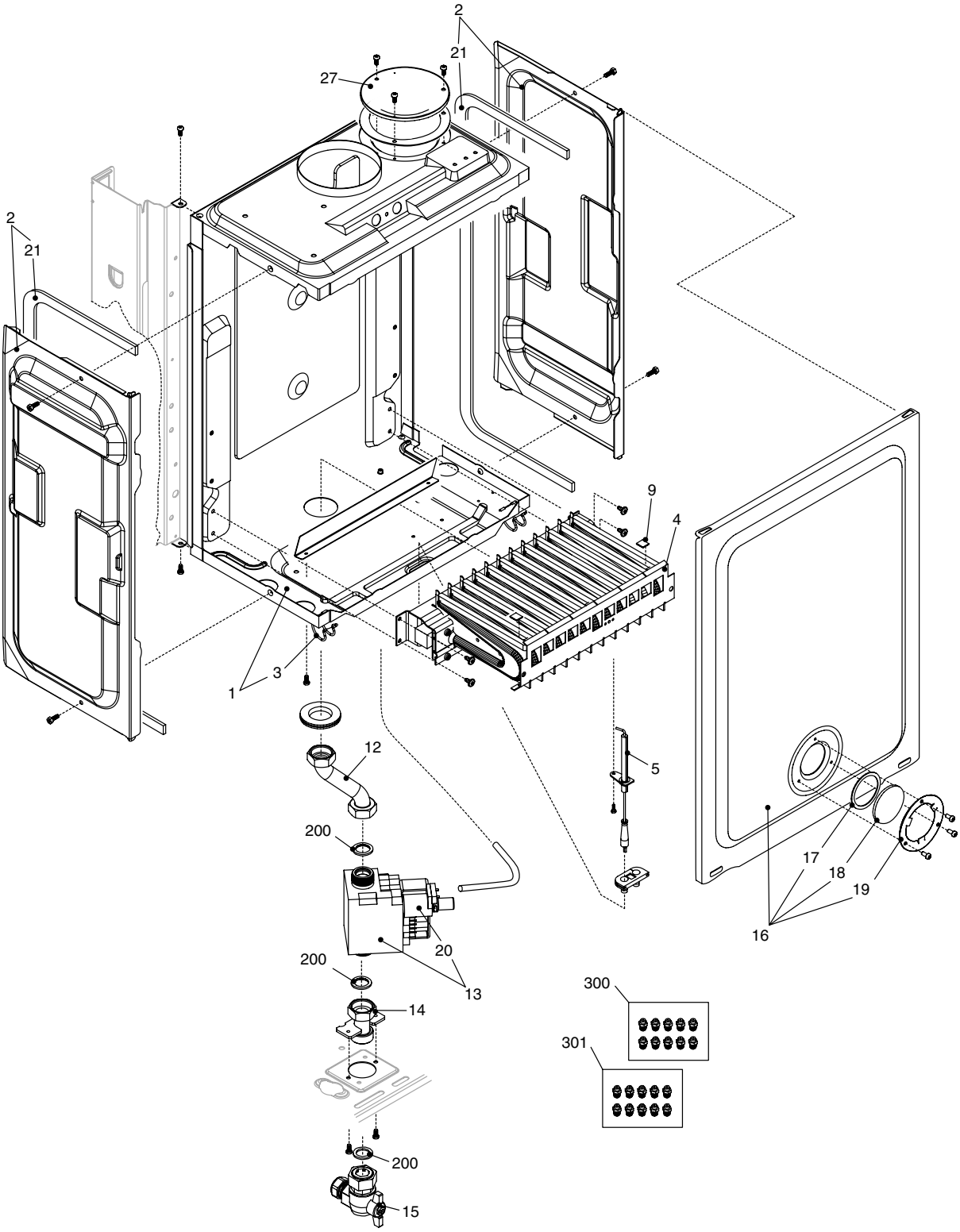

POS.	DESCRIPTION	25 HE	29 HE
1	Air box bottom	10027533	10027562
2	Ambidx air box side	10024166	10024166
3	Clip	0442	0442
4	Burner assembly	10027536	10027564
5	Spark electrode	10025985	10025985
9	Burner plate	5172	5172
12	Gas pipe	10027537	10027537
13	Gas valve	10025074	10025074
14	Gas pipe	10026703	10026703
15	Gas cock	10020897	10020897
16	Air box cover	10020216	10020217
17	Washer	5072	5072
18	Glass	3139	3139
19	Flange	4007	4007
20	Gas valve solenoid	10020838	10020838
21	Washer	5905	5905
27	Hole cap	8084	8084
200	Washer	5023	5023
300	N.G. conversion kit	01005225	01005225
301	LPG conversion kit	01005407	01005407

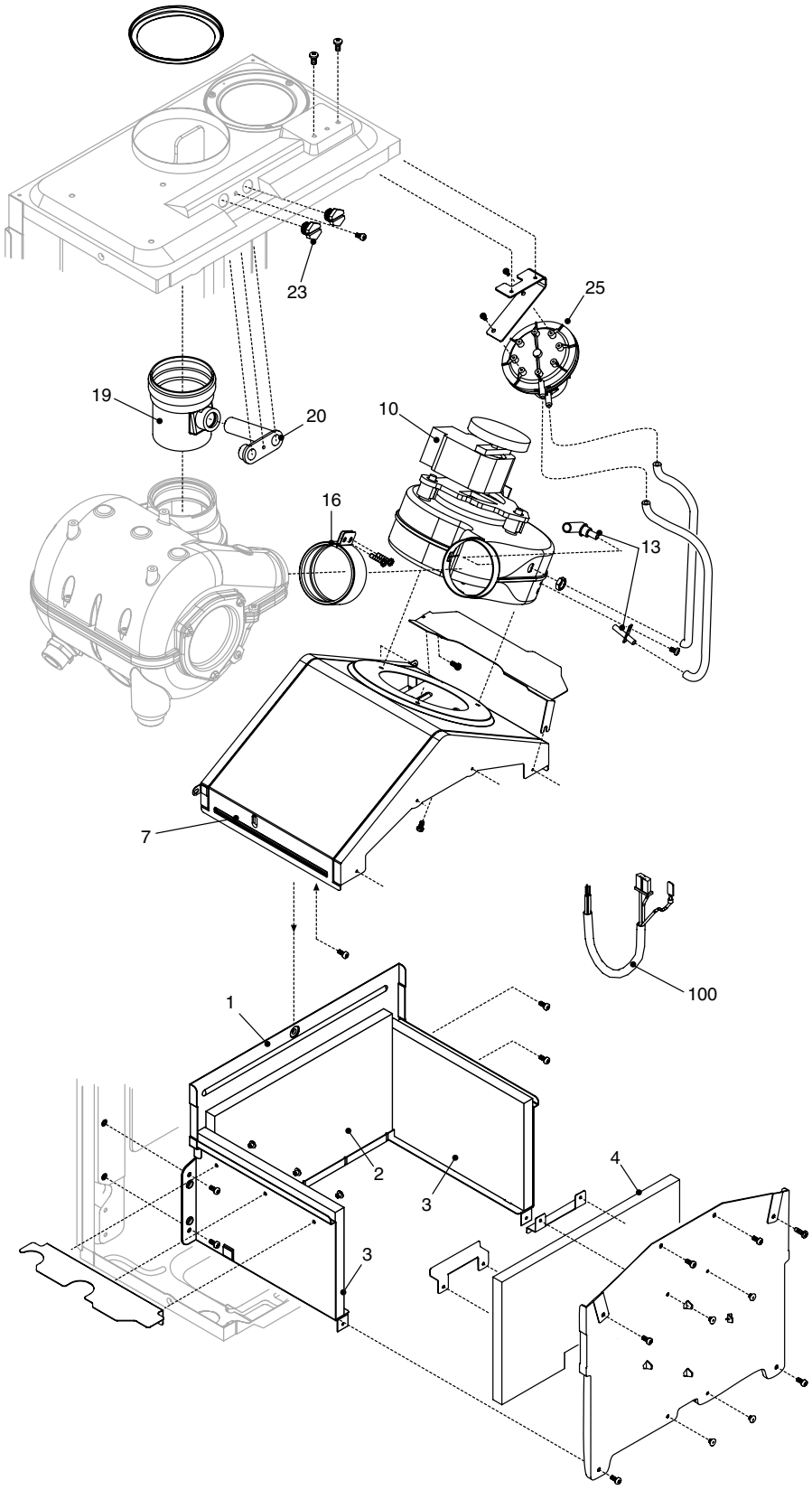

POS.	DESCRIPTION	25 HE	29 HE
1	Combustion chamber assembly	10025935	10026406
2	Combustion chamber back panel	5270	5316
3	Combustion chamber lateral panel	5271	5271
4	Combustion chamber front panel	5269	5315
7	Hood assembly	10024310	10024125
10	Fan	10024035	10024035
13	Venturi and pressure tube kit	01005405	01005405
16	Clamp for tube	10024126	10024126
19	Fan flue connection	10024137	10024137
20	Block with combustion analysis check	10026933	10026933
23	Brass cap	8086	8086
25	Pressure differential switch	10020889	10020889
100	Combustion - fan cable (PCB ground faston fan H_2O limit thermostat CH NTC flue pressure switch)	10027559	10027559

10.1 RELATED DOCUMENTS

BS 6798		INSTALLATION OF BOILERS OF RATED NOT EXCEEDING 60kW
BS 5449	PART 1	FORCED CIRCULATION HOT WATER SYSTEMS
BS 5546		INSTALLATION OF GAS HOT WATER SUPPLIES FOR DOMESTIC PURPOSES
BS 5440	PART 1	FLUES
BS 5482	PART 1	DOMESTIC BUTANE & PROPANE GAS BURNERS IN PERMAMENT DWELLINGS

10.2 TECHNICAL DATA

GAS PRESSURES	25 HE	29 HE	35 HE
Inlet pressure	37 mbar	37 mbar	37 mbar
Burner pressure maximum	35.70 mbar	35.50 mbar	35.60 mbar
Burner pressure minimum (heating)	12.80 mbar	10.00 mbar	7.00 mbar
Burner pressure minimum (DHW)	4.90 mbar	4.50 mbar	3.20 mbar
Maximum gas rate	1.94 Kg/h	2.25 Kg/h	2.70 Kg/h
Minimum gas rate	1.16 Kg/h	1.16 Kg/h	1.16 Kg/h
Injectot size (quantity)	12 x 0.76	14 x 0.76	16 x 0.76
SEDBUK (%)	87.1 Band “B”	87.7 Band “B”	89.57 Band “B”
NOx (max - min) PPM	250 - 170	250 - 180	250 - 180
CO (max - min) PPM	90 - 100	120 - 120	65 - 120
CO_2 (%)	7.50 - 4.35	7.60 - 4.50	7.60 - 3.05
CO/CO_2 ratio (max - min)	0.0012 to 1 - 0.0022 to 1	0.0015 to 1 - 0.0026 to 1	0.0008 to 1 - 0.0039 to 1

10.3 CONVERTING THE APPLIANCE GAS TYPE

To convert the appliance to another gas type it is necessary to change the burner injectors and adjust the gas pressures. It is also necessary to ensure the jumper tag at JP3 is enabled or disabled according to the gas type used.

- To change the injectors see section 6.
- For correct jumper tag configuration see 7.8.

10.4 GAS SUPPLY

The gas supply must be connected to the appliance by a competent LPG installer and must be of sufficient size to supply the appliance at its maximum output.

An existing supply must be checked to ensure that it is of adequate size to deal with the maximum rated input of this and any other appliances that it serves.

10.5 GAS SUPPLY INSTALLATION

The entire installation including the meter must be purged and checked for gas soundness.

10.6 CHECKING AND ADJUSTING BURNER PRESSURE (see fig. 26)

Isolate the appliance from the electrical supply and attach a suitable manometer to the gas valve outlet test point.

10.6.1 SETTING THE MAXIMUM BURNER PRESSURE fig. 40

Light the boiler as described in 5.7, fully open a DHW outlet (preferably the bath) and ensure the HW temperature selector is set at maximum. Allow the appliance to stabilise.

Compare the reading on the manometer with the value described in 10.2. If adjustment is required, remove the protective cap from the gas valve modulating coil assembly and turn the outer (10mm) nut clockwise to increase, or counter-clockwise to decrease the burner pressure

10.6.2 SETTING THE MINIMUM BURNER PRESSURE fig. 39

Once the maximum burner pressure has been checked and/or adjusted, remove one of the grey wires from the modulating coil. Compare the reading on the manometer with the value described in 10.2.

If adjustment is required, turn the inner (red) crosshead screw clockwise to increase, or counter-clockwise to decrease the burner pressure, whilst ensuring that the outer (10mm) nut does not move. When checking and/or adjustment and/or adjustment has been completed, isolate the appliance from the electrical supply, close the DHW outlet, replace the protective cap, refit the grey wire to the modulating coil, remove the manometer, and tighten the outlet test point.

IMPORTANT, A GAS SOUNDNESS CHECK MUST BE CARRIED OUT.

BENCHMARK No. | | | | | | |

COLLECTIVE MARK

GAS BOILER COMMISSIONING CHECKLIST

BOILER SERIAL No. _____ NOTIFICATION No. _____

CONTROLS

To comply with the Building Regulations, each section must have a tick in one or other of the boxes

TIME & TEMPERATURE CONTROL TO HEATING	ROOM T/STAT & PROGRAMMER/TIMER	☐	PROGRAMMABLE ROOMSTAT	☐
TIME & TEMPERATURE CONTROL TO HOT WATER	CYLINDER T/STAT & PROGRAMMER/TIMER	☐	COMBI BOILER	☐
HEATING ZONE VALVES	FITTED	☐	NOT REQUIRED	☐
HOT WATER ZONE VALVES	FITTED	☐	NOT REQUIRED	☐
THERMOSTATIC RADIATOR VALVES	FITTED	☐		
AUTOMATIC BYPASS TO SYSTEM	FITTED	☐	NOT REQUIRED	☐

FOR ALL BOILERS CONFIRM THE FOLLOWING

THE SYSTEM HAS BEEN FLUSHED IN ACCORDANCE WITH THE BOILER MANUFACTURER'S INSTRUCTIONS?	☐
THE SYSTEM CLEANER USED	
THE INHIBITOR USED	

FOR THE CENTRAL HEATING MODE, MEASURE & RECORD

GAS RATE		^{3}/hr		^{3}/hr
BURNER OPERATING PRESSURE (IF APPLICABLE)	☐	N/A		
CENTRAL HEATING FLOW TEMPERATURE				°C
CENTRAL HEATING RETURN TEMPERATURE				°C

FOR COMBINATION BOILERS ONLY

HAS A WATER SCALE REDUCER BEEN FITTED?	YES ☐	NO ☐
WHAT TYPE OF SCALE REDUCER HAS BEEN FITTED?		

FOR THE DOMESTIC HOT WATER MODE, MEASURE & RECORD

GAS RATE		^{3}/hr		^{3}/hr
MAXIMUM BURNER OPERATING PRESSURE (IF APPLICABLE)	☐	N/A		mbar
COLD WATER INLET TEMPERATURE				°C
HOT WATER OUTLET TEMPERATURE				°C
WATER FLOW RATE				lts/min

FOR CONDENSING BOILERS ONLY CONFIRM THE FOLLOWING

THE CONDENSATE DRAIN HAS BEEN INSTALLED IN ACCORDANCE WITH THE MANUFACTURER'S INSTRUCTIONS?	YES ☐

FOR ALL INSTALLATIONS CONFIRM THE FOLLOWING

THE HEATING AND HOT WATER SYSTEM COMPLIES WITH CURRENT BUILDING REGULATIONS				☐
THE APPLIANCE AND ASSOCIATED EQUIPMENT HAS BEEN INSTALLED AND COMMISSIONED IN ACCORDANCE WITH THE MANUFACTURER'S INSTRUCTIONS				☐
IF REQUIRED BY THE MANUFACTURER, HAVE YOU RECORDED A CO/CO_2 RATIO READING?	N/A ☐	YES		CO/CO_2 RATIO
THE OPERATION OF THE APPLIANCE AND SYSTEM CONTROLS HAVE BEEN DEMONSTRATED TO THE CUSTOMER				☐
THE MANUFACTURER'S LITERATURE HAS BEEN LEFT WITH THE CUSTOMER				☐

COMMISSIONING ENG'S NAME PRINT _____ CORGI ID No. _____

SIGN _____ DATE _____

SERVICE INTERVAL RECORD

It is recommended that your heating system is serviced regularly
and that you complete the appropriate Service Interval Record Below.

Service Provider. Before completing the appropriate Service Interval Record below, please ensure you have carried out the service as described in the boiler manufacturer's instructions. Always use the manufacturer's specified spare part when replacing all controls

SERVICE 1 DATE
ENGINEER NAME
COMPANY NAME
TEL No.
CORGI ID CARD SERIAL No.
COMMENTS
SIGNATURE

SERVICE 2 DATE
ENGINEER NAME
COMPANY NAME
TEL No.
CORGI ID CARD SERIAL No.
COMMENTS
SIGNATURE

SERVICE 3 DATE
ENGINEER NAME
COMPANY NAME
TEL No.
CORGI ID CARD SERIAL No.
COMMENTS
SIGNATURE

SERVICE 4 DATE
ENGINEER NAME
COMPANY NAME
TEL No.
CORGI ID CARD SERIAL No.
COMMENTS
SIGNATURE

SERVICE 5 DATE
ENGINEER NAME
COMPANY NAME
TEL No.
CORGI ID CARD SERIAL No.
COMMENTS
SIGNATURE

SERVICE 6 DATE
ENGINEER NAME
COMPANY NAME
TEL No.
CORGI ID CARD SERIAL No.
COMMENTS
SIGNATURE

SERVICE 7 DATE
ENGINEER NAME
COMPANY NAME
TEL No.
CORGI ID CARD SERIAL No.
COMMENTS
SIGNATURE

SERVICE 8 DATE
ENGINEER NAME
COMPANY NAME
TEL No.
CORGI ID CARD SERIAL No.
COMMENTS
SIGNATURE

SERVICE 9 DATE
ENGINEER NAME
COMPANY NAME
TEL No.
CORGI ID CARD SERIAL No.
COMMENTS
SIGNATURE

SERVICE 10 DATE
ENGINEER NAME
COMPANY NAME
TEL No.
CORGI ID CARD SERIAL No.
COMMENTS
SIGNATURE

Vokèra
heating for life

Cod. 10028045 - 42/05 - Ed. 1

Registered address:
Vokèra Ltd
Borderlake House
Unit 7 Riverside Industrial Estate
London Colney
Herts AL2 1HG

enquiries@vokera.co.uk

www.vokera.co.uk
www.vokera.ie

Sales, General Enquires
T 0844 391 099
F 0844 391 0998

Vokèra Ireland
West Court, Callan
Co Kilkenny
T 056 7755057
F 056 7755060

Vokèra Limited reserve the right to change
specification without prior notice
Consumers statutory rights are not affected.

A Riello Group Company.
Company Reg No: 1047779