Vokèra

Eclipse

ESS

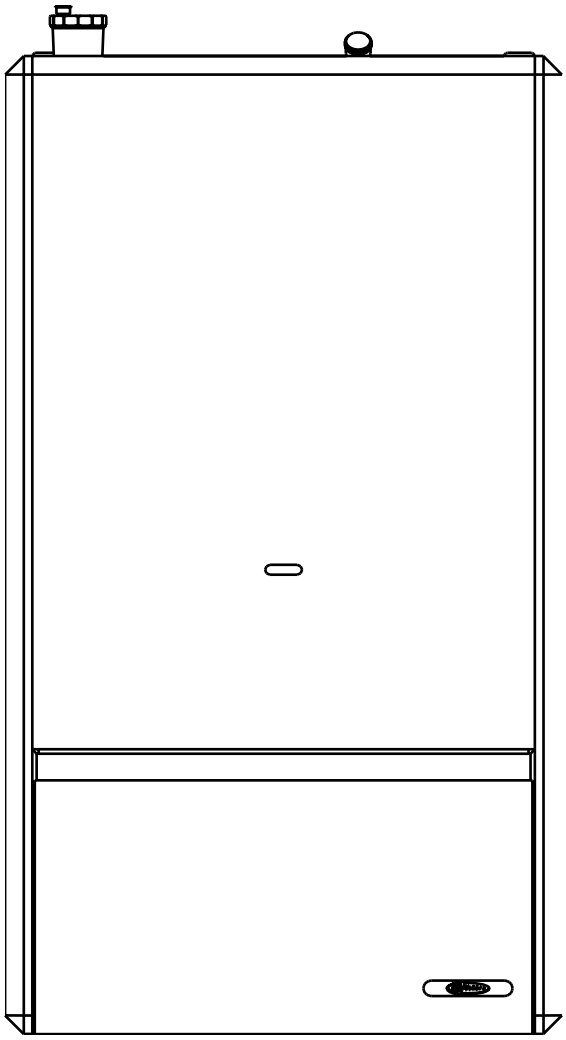

Installation & Servicing Instructions

CE

THESE INSTRUCTIONS TO BE RETAINED BY USER

spares & parts online
IBASIS.co.uk©

Contents

Design principles & operating sequence		Page
1.1	Principle components	2
1.2	Mode of operation (at rest)	2
1.3	Heat request mode	2
1.4	Safety devices	2

Technical data		Page
2.1	Central heating	3
2.2	Gas pressure	3
2.3	Expansion vessel	3
2.4	Dimensions	3
2.5	Clearances	3
2.6	Connections	3
2.7	Electrical	3
2.8	Flue details	3
2.9	Efficiency	3
2.10	Parameter defaults	3
2.11	Emissions	3
2.12	Pump duty	4

General requirements		Page
3.1	Related documents	4
3.2	Location of appliance	4
3.3	Gas supply	5
3.4	Flue system	5
3.5	Air supply	5
3.6	Water circulation	5
3.7	Electrical supply	6
3.8	Combustible surfaces	6
3.9	Timber framed buildings	6
3.10	Condensate disposal	6
3.11	Inhibitors	6

Installation		Page
4.1	Delivery	7
4.2	Contents	7
4.3	Unpacking	7
4.4	Preparation for mounting	7
4.5	Fitting the flue	7
4.6	Connecting the gas & water	10
4.7	Condensate outlet	11
4.8	Electrical connections	11

Commissioning		Page
5.1	Gas supply installation	12
5.2	The heating system	12
5.3	Initial filling of the system	12
5.4	Initial flushing of the system	12
5.5	Pre-operation checks	12
5.6	Initial lighting	12
5.7	Final flushing of the system	12
5.8	Operating parameters	13
5.9	Functional parameters	13
5.10	Range rating	13
5.11	Setting the system design pressure	13
5.12	Regulating the central heating system	13
5.13	Final checks	14
5.14	Instructing the user	14

Servicing		Page
6.1	General	14
6.2	Routine annual servicing	14
6.3	Replacement of components	14
6.4	Component removal procedure	14
6.5	Pump head removal	15
6.6	Safety valve removal	15
6.7	Automatic air valve removal	15
6.8	Pressure gauge removal	15
6.9	Temperature sensor removal	15
6.10	Main PCB removal	15
6.11	Gas valve removal	16
6.12	Fan removal	16
6.13	Burner removal	16
6.14	Electrode removal	16
6.15	Injector removal	16
6.16	Hydraulic manifold assembly	17
6.17	Condense trap removal	17
6.18	Condense pressure switch removal	17
6.19	Combustion cover removal	17
6.20	Expansion vessel removal	18
6.21	Input & status PCB removal	18

Checks, adjustments, and fault finding		Page
7.1	Checking appliance operation	19
7.2	Mode of operation	19
7.3	Checking/adjusting fan speeds	19
7.4	Adjusting the gas valve	20
7.5	Status code	21
7.6	Lockout faults codes	21
7.7	Diagnostic recall	21
7.8	Temperature sensor viewing mode	22
7.9	Checking the expansion vessel	22
7.10	External faults (installation)	22
7.11	Electrical checks	22
7.12	Fault finding	23

Wiring diagrams		Page
8.1	Important note	26
8.2	Installation of Vokera time clock	26
8.3	External controls	26

Exploded diagrams		Page
9.1	Table 1	31
9.2	Table 2	32
9.3	Table 3	33
9.4	Table 4	34
9.5	Table 5	35

L.P.G. instructions		Page
10.1	Technical data	36
10.2	Related documents	36
10.3	Gas supply	36
10.4	Gas supply installation	36
10.5	Adjusting the gas valve	36
10.6	Range rating	37

The Vokera Eclipse 216 ESS & 226 ESS are central heating condensing boilers, which - by design - incorporates full sequence electronic ignition, circulating pump, expansion vessel, safety valve, pressure gauge and automatic by-pass.

The Eclipse 216 & 226 ESS boilers are produced as room sealed, category C1, C3, C6 appliances, suitable for wall mounting applications only. The Eclipse is provided with a fan powered flue outlet with an annular co-axial combustion air intake that can be rotated – horizontally – through 360 degrees for various horizontal or vertical applications. The Eclipse can also be used with the Vokera twin flue system.

These appliances are designed for use with sealed systems only; consequently they are not intended for use on open vented systems.

A range rating facility is incorporated in the appliance.

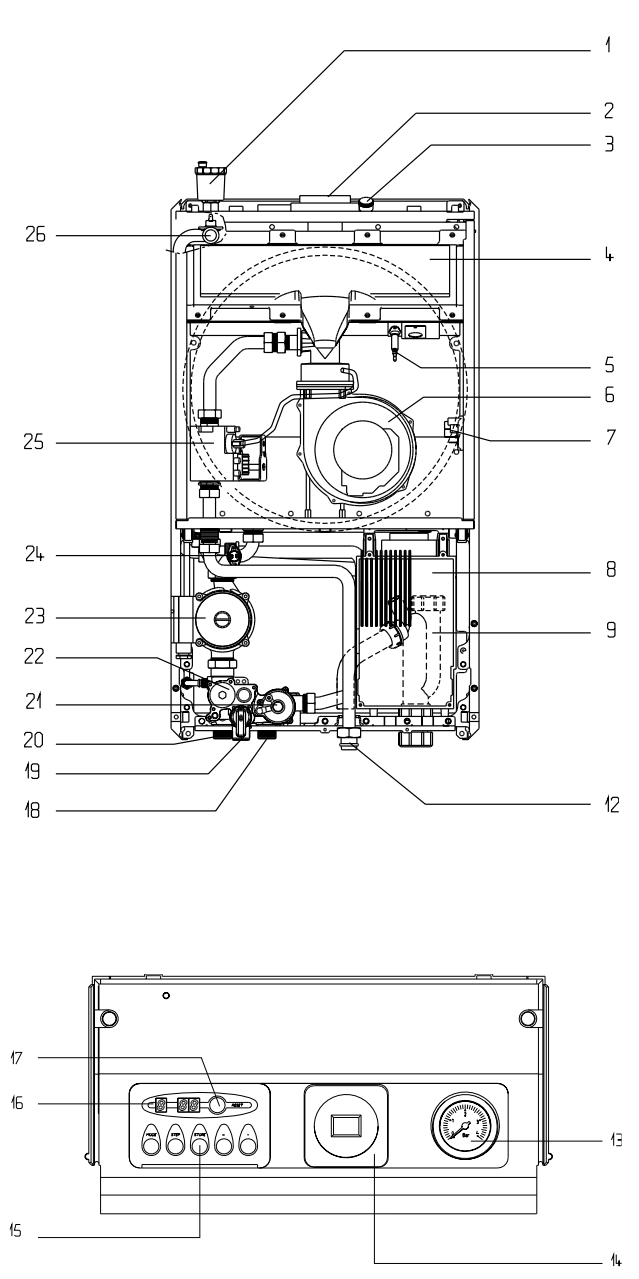

Fig. 1

General layout

1 Auto air vent
2 Flue outlet & air intake
3 Flue gas analysis test point
4 Burner plate
5 Spark/Sensing Electrode
6 Fan assembly
7 Pressure switch
8 Electronic Control Board (PCB)
9 Condense trap
12 Gas connection
13 Pressure gauge
14 Time clock aperture
15 Function key pad
16 LED display
17 Reset button
18 Heating flow connection
19 Safety valve
20 Heating return connection
21 Auto by-pass
22 Hydraulic manifold
23 Pump
24 Return sensor (NTC2)
25 Gas valve
26 Flow sensor (NTC1)

1.1 PRINCIPLE COMPONENTS

- A fully integrated electronic control board featuring electronic temperature control, continuous air/gas modulation, anti-cycle control, pump over-run, self-diagnostic fault indicator, electronic ignition with flame supervision, & appliance frost protection.
- Cast aluminium mono-block heat exchanger.
- Low Nox burner with pre-mix.
- Two-stage gas valve.
- Pump.
- Expansion vessel.
- Pressure gauge.
- Safety valve.

1.2 MODE OF OPERATION (at rest)

When there is no demand for heating or hot water. And the appliance remains inactive for a period of 24 hours, the pump will be energised for a few moments to prevent it from seizing. Should the flow temperature sensor fall below 7°C the pump will be energised.

If the flow sensor temperature falls to below 3°C the burner will be lit and the appliance will operate at the minimum output until the temperature of the flow sensor reaches 10°C, whereupon the pump will continue to run in pump over-run mode.

1.3 MODE OF OPERATION (heating/hot water request)

When there is a request for heat via the time clock and/or external controls, the pump will start and the fan will be activated via the flow temperature sensor. When the fan is sensed to be operating correctly, the ignition sequence commences. The speed of the fan and therefore the output of the boiler is determined by the temperature of the water sensed by the flow & return temperature sensors, consequently a high temperature at the flow sensor results in a lower fan speed. As the water temperature increases, the temperature sensors – located on the flow & return pipes of the boiler – reduce the fan speed via the electronic circuitry. Depending on the load, either the water temperature will continue to rise until the set point is achieved or the water temperature will fall whereby fan speed will increase relative to the output required. When the boiler has reached the set point, the burner will switch off. The built-in anti-cycle device prevents the burner from re-lighting for an adjustable period of time (factory default is 3 minutes). When the temperature of the flow sensor falls below the set-point, the burner will re-light.

1.4 SAFETY DEVICES

When the appliance is in use, safe operation is ensured by:

- a high limit thermostat that interrupts the operation of the burner;
- a differential temperature protection circuit which interrupts the burner if the temperature differential is inverted;
- a fan speed sensor which checks the correct operation of the fan, thereby allowing safe operation of the burner;
- a safety valve which releases excess pressure from the primary circuit.
- a condense pressure switch that will stop the burner from operating should the condense trap become blocked.

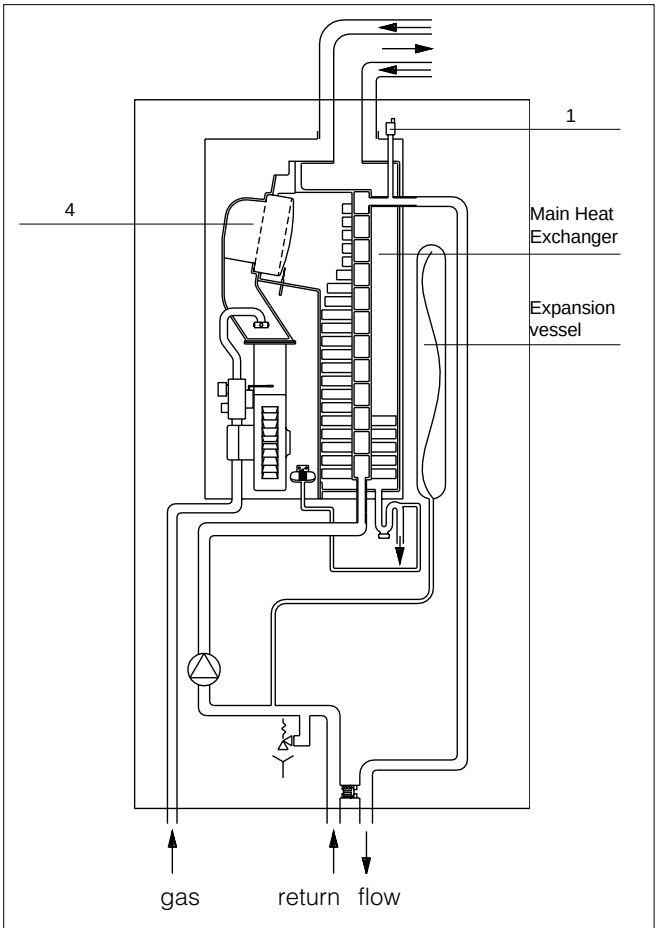

Fig. 2

SECTION 2 TECHNICAL DATA

	216	226
2.1 Central heating		
Heat input	17,80 kW	29,00 kW
Maximum heat output 60/80°C (return & flow temperature)	15,40 kW	25,30 kW
Maximum heat output 30/50°C (return & flow temperature)	16,80 kW	26,8 kW
Minimum heat output 60/80°C (return & flow temperature)	4,40 kW	7,3 kW
Minimum heat output 30/50°C (return & flow temperature)	4,90 kW	8,10 kW
Minimum working pressure	0,45 bar	0,45 bar
Maximum working pressure	3 bar	3 bar
Minimum flow rate	350 l/h	350 l/h
2.2 Gas pressure		
Inlet pressure (G20)	20,0 mbar	20,0 mbar
Maximum gas rate	1,69 m^3/h	2,76 m^3/h
Minimum gas rate	0,49 m^3/h	0,80 m^3/h
Injector size	single injectors with six 3,1mm holes	single injectors with six 3,8mm holes
2.3 Expansion vessel		
Capacity	8 litres	8 litres
Maximum system volume	76 litres	76 litres
Pre-charge pressure	1,0 bar	1,0 bar
2.4 Dimensions		
Height	790 mm	790 mm
Width	450 mm	450 mm
Depth	322 mm	322 mm
Dry weight	57 kg	57 kg
2.5 Clearances		
Sides	25 mm	25 mm
Top	150mm from casing or 25mm above flue elbow (whichever is applicable)	150mm from casing or 25mm above flue elbow (whichever is applicable)
Bottom	150 mm	150 mm
Front	600 mm	600 mm
2.6 Connections		
Flow & return	22 mm compression	22 mm compression
Gas	1/2 inch BSP	1/2 inch BSP
Safety valve	1/2 inch BSP	1/2 inch BSP
2.7 Electrical		
Voltage	230V/~ 50hz	230V/~ 50hz
Power consumption	130 W	130 W
Internal fuse	2 A	2 A
External fuse	3 A	3 A
2.8 Flue details		
Maximum horizontal flue length (concentric)	10 metres	6,45 metres
Maximum vertical flue length (concentric)	11 metres	7,45 metres
Maximum twin flue length (horizontal or vertical)	39 m + 39 m	29 m + 29 m
2.9 Efficiency		
SEBDUK rating	Band “A”	Band “A”
2.10 Operating parameters (factory default shown)		
Maximum fan speed	4.000 RPM	5.500 RPM
Minimum fan speed	1.300 RPM	1.700 RPM
Soft light setting	100 (%)	80 (%)
Anti-cycle delay (variable between 0 sec.-360 sec.)	180 sec.	180 sec.
Flow temperature (variable between 20°-90°)	75°C	75°C
Pump over-run (variable between 3-99 minutes)	10 minutes	10 minutes
2.11 Emissions		
NOx at maximum output	40 ppm	30 ppm
NOx at minimum output	20 ppm	15 ppm
CO at maximum output	50 ppm	50 ppm
CO at minimum output	50 ppm	50 ppm
CO_2 at maximum output (air chamber cover off)	9,8 %	9,8 %
CO_2 at minimum output (air chamber cover off)	9,8 %	9,8 %
CO/CO_2 ratio	0.0005 to 1	0.0005 to 1

Ref. Condition 15 °C , 1013,25 mbar, dry gas NOTE: L.P.G. data refer to section 10

2.12 PUMP DUTY

Fig. 3 shows the flow rate available – after allowing for pressure loss through the appliance – for system requirements. When using this graph apply only the pressure loss of the system. The graph is based on 20°C temperature differential.

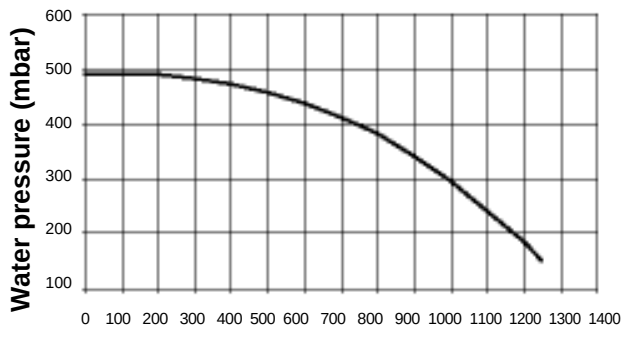

Fig. 3

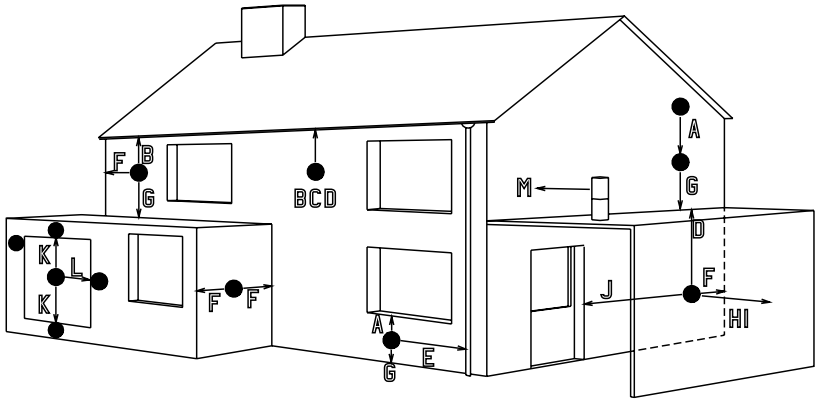

Terminal position for fan assisted boiler

(minimum distance)			mm
A	-	Directly above or below an open window or other opening (e.g. air brick)	300
B	-	Below gutters, soil pipes or drain pipes	25
C	-	Below eaves	25
D	-	Below balconies or car port roof	25
E	-	From vertical drain pipes and soil pipes	75
F	-	From internal or external corners	25
G	-	Above ground or below balcony level	300
H	-	From a surface facing a terminal	600
I	-	From a terminal facing a terminal	1200
J	-	From an opening in the car port (e.g. door window) into dwelling.	1200
K	-	Vertically from a terminal on the same wall	1500
L	-	Horizontally from a terminal on the same wall	300
M	-	Horizontally from a vertical terminal to a wall	300
N –		**Horizontally from an opening, airbrick, openable window, etc.**	**300**

NOTE: The flue must be terminated in a place not likely to cause a nuisance.

Fig. 4

SECTION 3 GENERAL REQUIREMENTS

This appliance must be installed by a competent person in accordance with the Gas Safety (Installation & Use) Regulations.

3.1 RELATED DOCUMENTS

The installation of this boiler must be in accordance with the relevant requirements of the Gas Safety (Installation & Use) Regulations, the local building regulations, the current I.E.E. wiring regulations, the bylaws of the local water undertaking, the Building Standards (Scotland) Regulation and Building Standards (Northern Ireland) Regulations.

It should be in accordance also with any relevant requirements of the local authority and the relevant recommendations of the following British Standard Codes of Practice.

3.2 LOCATION OF APPLIANCE

The appliance may be installed in any room or internal space, although particular attention is drawn to the requirements of the current I.E.E. wiring regulations, and in Scotland, the electrical provisions of the Building Regulations, with respect to the installation of the appliance in a room or internal space containing a bath or shower.

When an appliance is installed in a room or internal space containing a bath or shower, the appliance or any control pertaining to it must not be within reach of a person using the bath or shower.

The location chosen for the appliance must permit the provision of a safe and satisfactory flue and termination. The location must also permit an adequate air supply for combustion purposes

BS 5440	**PART 1**	**FLUES**
BS 5440	**PART 2**	**FLUES AND VENTILATION**
BS 5449	**PART 1**	**FORCED CIRCULATION HOT WATER SYSTEMS**
BS 6798		**INSTALLATION OF BOILERS OF RATED INPUT NOT EXCEEDING 60kW**
BS 6891		**LOW PRESSURE INSTALLATION PIPES**
BS 7074	**PART 1**	**APPLICATION, SELECTION, AND INSTALLATION OF EXPANSION VESSELS AND ANCILLARY EQUIPMENT FOR SEALED WATER SYSTEMS**

and an adequate space for servicing and air circulation around the appliance.
Where the installation of the appliance will be in an unusual location special procedures may be necessary, BS 6798 gives detailed guidance on this aspect.

A compartment used to enclose the appliance must be designed and constructed specifically for this purpose. An existing compartment/cupboard may be utilised provided that it is modified to suit.

Details of essential features of compartment/cupboard design, including airing cupboard installations, are given in BS 6798. This appliance is not suitable for external installation.

3.3 GAS SUPPLY

The gas meter – as supplied by the gas supplier – must be checked to ensure that it is of adequate size to deal with the maximum rated input of all the appliances that it serves. Installation pipes must be fitted in accordance with BS 6891.
Pipe-work from the meter to the appliance must be of adequate size. Pipes of a smaller size than the appliance gas inlet connection must not be used.
The installation must be tested for soundness in accordance with BS 6891.

If the gas supply serves more than one appliance, it must be ensured that an adequate supply is maintained to each appliance when they are in use at the same time.

3.4 FLUE SYSTEM

The terminal should be located where the dispersal of combustion products is not impeded and with due regard for the damage and discoloration that may occur to building products located nearby. The terminal must not be located in a place where it is likely to cause a nuisance (see fig. 4).

Water vapour will condense on leaving the flue terminal, the effect of such pluming must be considered.

If installed less than 2m above a pavement or platform to which people have access (including balconies or flat roofs) the terminal must be protected by a guard of durable material. The guard must be fitted centrally over the terminal. Refer to BS 5440 Part 1, when the terminal is 0,5 metres (or less) below plastic guttering or 1 metre (or less) below painted eaves.

3.5 AIR SUPPLY

The following notes are intended for general guidance only.

This appliance is a room sealed, fan-flued boiler, consequently it does not require a permanent air vent for combustion air supply.

When installed in a cupboard or compartment, ventilation for cooling purposes is also not required.

3.6 WATER CIRCULATION

Detailed recommendations are given in BS 5449 Part 1 and BS 6798. The following notes are for general guidance only.

3.6.1 PIPEWORK

It is recommended that copper tubing to BS 2871 Part 1 is used in conjunction with soldered capillary joints.
Where possible pipes should have a gradient to ensure air is carried naturally to air release points and that water flows naturally to drain cocks.

Except where providing useful heat, pipes should be insulated to avoid heat loss and in particular to avoid the possibility of freezing. Particular attention should be paid to pipes passing through ventilated areas such as under floors, loft-space, and void areas.

3.6.2 AUTOMATIC BY-PASS

The appliance has a built-in automatic by-pass, consequently there is no requirement for an external by-pass, however the design of the system should be such that it prevents boiler 'cycling'.

3.6.3 DRAIN COCKS

These must be located in accessible positions to facilitate draining of the appliance and all water pipes connected to the appliance. The drain cocks must be manufactured in accordance with BS 2879.

3.6.4 AIR RELEASE POINTS

These must be positioned at the highest points in the system where air is likely to be trapped. They should be used to expel trapped air and allow complete filling of the system.

3.6.5 EXPANSION VESSEL

The appliance has an integral expansion vessel to accommodate the increased volume of water when the system is heated. It can accept up to 8

litres of expansion from within the system, generally this is sufficient, however if the system has an unusually high water content, it may be necessary to provide additional expansion capacity (see 6.19).

3.6.6 FILLING POINT

A method for initial filling of the system and replacing water lost during servicing etc. must be provided. This method of filling must comply with the local water authority regulations. Fig. 5 shows a widely accepted method.

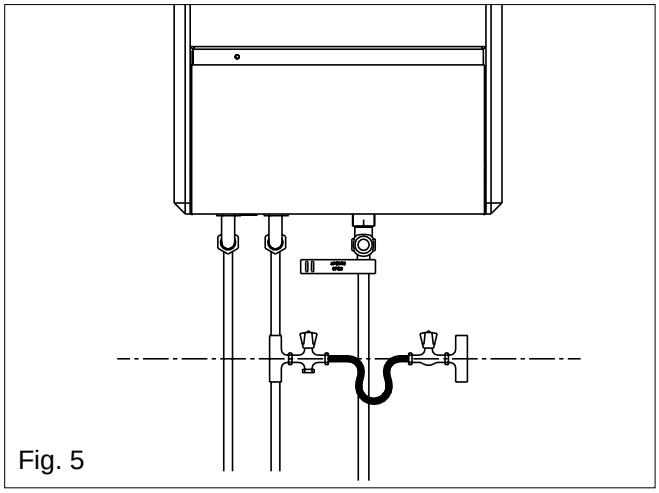

Fig. 5

3.6.7 LOW PRESSURE SEALED SYSTEM

An alternative method of filling the system would be from an independent make-up vessel or tank mounted in a position at least 1 metre above the highest point in the system and at least 5 metres above the boiler (see fig. 5 A). The cold feed from the make-up vessel or tank must be fitted with an approved non-return valve and stopcock for isolation purposes. The feed pipe should be connected to the return pipe as close to the boiler as possible.

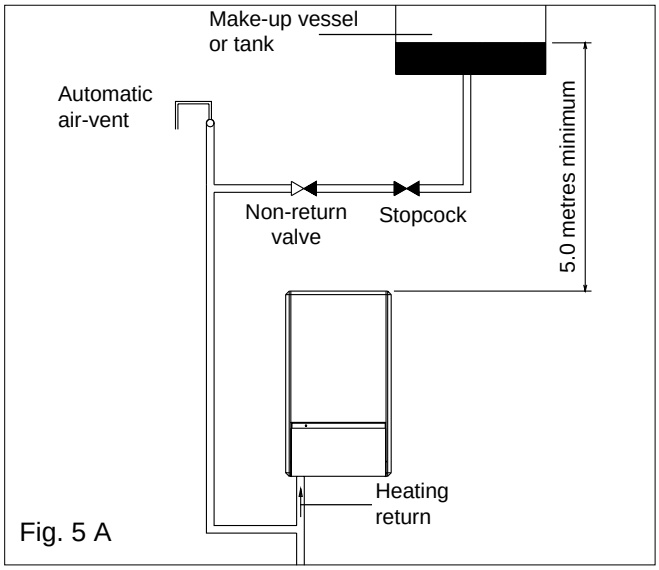

Fig. 5 A

3.6.8 FREQUENT FILLING

Frequent filling or venting of the system may be indicative of a leak. Care should be taken during the installation of the appliance to ensure all aspects of the system are capable of withstanding pressures up to at least 3 bar.

3.7 ELECTRICAL SUPPLY

The appliance is supplied for operation on 230V @ 50Hz electrical supply, it must be protected with a 3-amp fuse. The method of connection to the mains electricity supply must allow for complete isolation from the supply. The preferred method is by using a double-pole switch with a contact separation of at least 3mm. The switch must only supply the appliance and its corresponding controls, i.e. time clock, room thermostat, etc. Alternatively an un-switched shuttered socket with a fused 3-pin plug both complying with BS 1363 is acceptable.

3.8 MOUNTING ON A COMBUSTIBLE SURFACE

If the appliance is to be fitted on a wall of combustible material, a sheet of fireproof material must protect the wall.

3.9 TIMBER FRAMED BUILDINGS

If the appliance is to be fitted in a timber framed building, it should be fitted in accordance with the Institute of Gas Engineers publication (IGE/UP/7) "Guide for Gas Installations in Timber Frame Buildings".

3.10 CONDENSATE DISPOSAL

When choosing a location for the boiler, consideration should be given to the disposal of the condensate discharge into a suitable drain or soil pipe. The condensate outlet pipe must be connected to the drain in accordance with building regulations or other rules in force.

3.11 INHIBITORS

The system shall be flushed in accordance with BS 7593. If an inhibitor is to be used, it shall be from a reputable manufacturer and shall be administered in strict accordance with the manufacturers instructions.

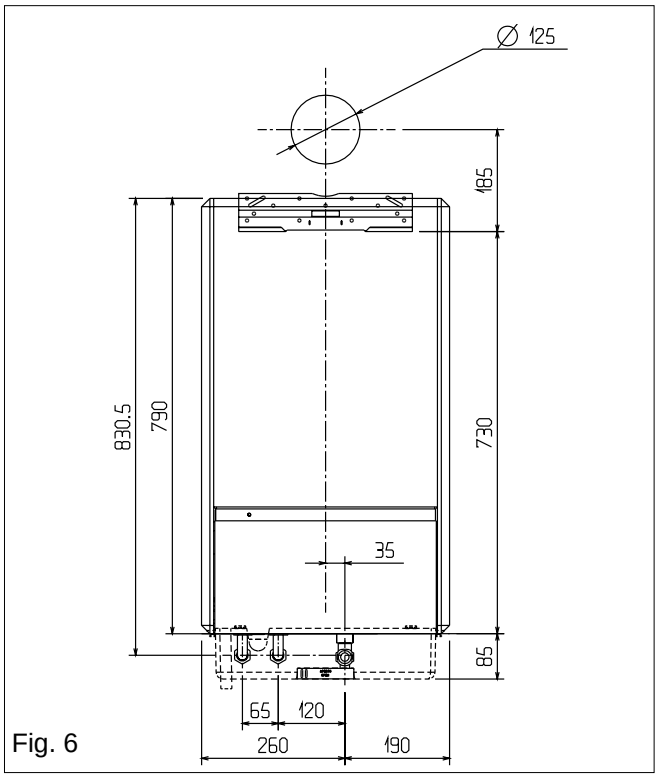

Fig. 6

4.1 DELIVERY

The appliance is delivered in a heavy-duty cardboard carton. Lay the carton on the floor with the writing the correct way up.

4.2 CONTENTS

Contained within the carton is:

- the boiler;
- the wall mounting bracket;
- template;
- an accessories pack containing the appliance service valves and washers;
- the instruction pack containing the installation & servicing instructions, user instructions, Benchmark logbook, guarantee registration card, and a 3amp fuse.

4.3 UNPACKING

At the top of the carton pull both sides open – do not use a knife – unfold the rest of the carton from around the appliance, carefully remove all protective packaging from the appliance, and lay the accessories etc. to one side.

4.4 PREPARATION FOR MOUNTING THE APPLIANCE

The appliance should be mounted on a smooth, vertical, non-combustible surface, which must be capable of supporting the full weight of the appliance. Care should be exercised when determining the position of the appliance with respect to hidden obstructions such as pipes, cables, etc.

When the position of the appliance has been decided – using the template supplied – carefully mark the position of the wall-mounting bracket (see fig. 6) and flue-hole (if applicable).

4.5 FITTING THE FLUE

The top flue outlet permits both horizontal and vertical flue applications to be considered, alternatively, the Vokera twin flue system can be utilised if longer flue runs are required.

4.5.1 CONCENTRIC HORIZONTAL FLUE

(For concentric vertical flue, see 4.5.2).
(For twin flue applications, see 4.5.3).
The appliance flue outlet elbow can be rotated through 360° on its vertical axis. In addition the flue may be extended from the outlet elbow in the horizontal plane (see 2.8). A reduction must also be made to the maximum length (see table below) when additional bends are used.

Reduction for additional bends

Bend	Reduction in maximum flue length for each bend
45° bend	0,5 metre
90° bend	1,0 metre

Horizontal flue terminals and accessories

Part No.	Description	Min-Max length
0225720	Horizontal flue kit for use with add. bends & extensions	1000mm
0225755	350-500 Telescopic extension	350mm-500mm
0225740	0,5m extension	500mm
0225745	1,0m extension	1000mm
0225750	2,0m extension	2000mm
0225730	45° bend (pair)	N/A
0225735	90° bend	N/A
0225760	Wall bracket (5)	N/A

Using the template provided (see fig. 6), mark and drill a 125mm hole for the passage of the flue pipe. The hole should have a 1° rise from the boiler to outside.

The fixing holes for the wall-mounting bracket should now be drilled and plugged, an appropriate type and quantity of fixing should be used to ensure that the bracket is mounted securely. Once the bracket has been secured to the wall, mount the appliance onto the bracket.

FITTING THE HORIZONTAL FLUE KIT

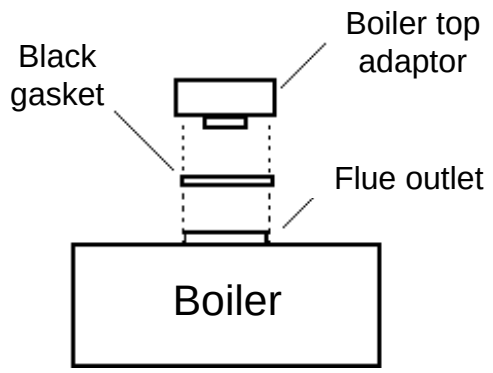

Fig. 7

Take the large black gasket - supplied with the flue terminal kit - and stretch it over the appliance flue outlet (fig. 7). Using a twisting motion, connect the boiler top adaptor - supplied with the flue terminal kit - to the appliance flue outlet ensuring the male spigot of the adaptor is pushed fully into the flue outlet spigot of the boiler (fig. 7). Carefully measure the distance from the centre of the appliance flue outlet to the edge of the finished outside wall (dimension X). Add 45mm to dimension X to give you Dimension Y (see fig 7A). Measure dimension Y from the terminal end of the concentric flue pipe and cut off the excess. Pass the concentric flue pipe through the previously drilled hole. Fit the flue bend to the boiler top adaptor and insert the concentric flue pipe into the flue bend ensuring the correct seal is made.

NOTE

You must ensure that the entire flue system is properly supported and connected.

Seal the flue assembly to the wall using cement or a suitable alternative that will provide satisfactory weatherproofing. The interior and exterior trim can now be fitted.

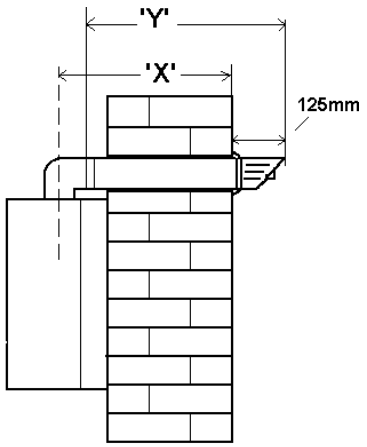

Fig. 7A 'Y' = 'X' + 45mm

4.5.1.1 EXTENDING THE FLUE

Connect the bend – supplied with the terminal kit – to the top of the boiler using the boiler top adapter (supplied, see fig. 7). The additional bends & extensions have push-fit connections, care should be taken to ensure that the correct seal is made when assembling the flue system. Connect the required number of flue extensions or bends (up to the maximum equivalent flue length) to the flue terminal (see fig. 7B & 7C).

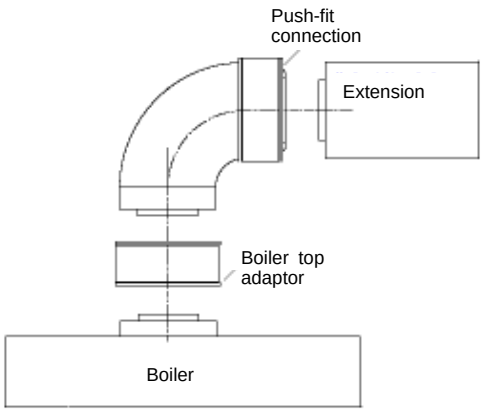

Fig. 7B

NOTE

When cutting an extension to the required length, you must ensure that the excess is cut from the plain end of the extension (see fig. 7B & 7C). Remove any burrs, and check that any seals are located properly.

You must ensure that the entire flue system is properly supported and connected.

Seal the flue assembly to the wall using cement or a suitable alternative that will provide satisfactory weatherproofing. The interior and exterior trim can now be fitted.

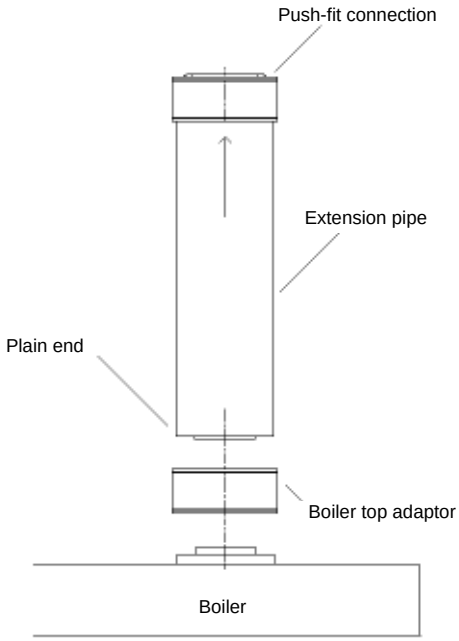

Fig. 7C

4.5.2 CONCENTRIC VERTICAL FLUE

The vertical flue terminal can be connected directly to the appliance flue outlet.

Alternatively, an extension or bend can be connected to the appliance flue outlet if desired (see 2.8), however if additional bends are fitted, a reduction must be made to the maximum flue length (see table below).

Reduction for bends

Bend	Reduction in maximum flue length for each bend
45° bend	0,5 metre
90° bend	1,0 metre

Vertical flue terminal and accessories

Part No.	Description	Min-Max length
0225725	Vertical flue terminal	1000 mm
0225770	Pitched roof flashing plate	N/A
0225765	Flat roof flashing plate	N/A
0225755	350-500 telescopic extension	350mm-500mm
0225740	0,5m extension	500mm
0225745	1,0m extension	1000mm
0225750	2,0m extension	2000mm
0225730	45° bend (pair)	N/A
0225735	90° bend	N/A
0225760	Wall bracket (4)	N/A

Using the dimensions given in fig. 8 as a reference, mark and cut a 105mm hole in the ceiling and/or roof.

IMPORTANT

You must ensure that the terminal is at least 300mm from any structure or surface (see fig. 8). The vertical flue terminal is 1,0 metre in length and cannot be cut; therefore it may be necessary to adjust the height of the appliance to suit or use a suitable extension.
Encure that any horizontal sections of the flue system have a 1° fall back to the boiler (17mm per 1000mm).

Fit the appropriate flashing plate to the roof and insert the vertical flue terminal through the flashing plate from the outside, ensuring that the collar on the flue terminal fits over the flashing.

The fixing holes for the wall-mounting bracket should now be drilled and plugged, an appropriate type and quantity of fixing should be used to ensure that the bracket is mounted securely. Once the bracket has been secured to the wall, mount the appliance onto the bracket.

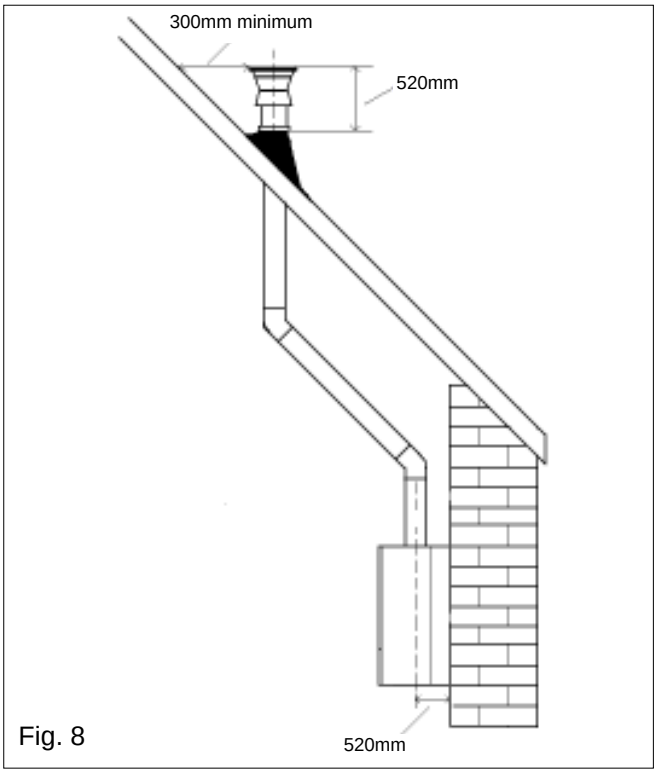

Fig. 8

NOTE

When cutting an extension to the required length, you must ensure that the excess is cut from the plain end of the extension.
Remove any burrs, and check that any seals are located properly.

4.5.3 TWIN FLUE SYSTEM

The Vokera twin flue system enables greater flue distances to be achieved (see 2.8) than that of the standard concentric flue system. It can be used for horizontal or vertical applications, however the twin flue system must be converted to the dedicated concentric flue kit for termination. It is essential that the installation of the twin flue system be carried out in strict accordance with these instructions.

GUIDANCE NOTES ON TWIN FLUE INSTALLATION

- The flue must have a fall back of 1° back to the appliance to allow any condensate that forms in the flue system to drain. Consideration must also be given to the fact that there is the possibility of a small amount of condensate dripping from the terminal.
- Ensure that the entire flue system is adequately supported, use at least one bracket for each extension.
- As the exhaust outlet pipe can reach very high temperatures it must be protected to prevent persons touching the hot surface.

Reduction for bends

Bend	Reduction in maximum flue length for each bend
45° bend	1,0 metre
90° bend	1,0 metre

Twin flue accessories

Part No.	Description	Length
0225805	Horizontal flue terminal	1000 mm
0225810	Vertical flue terminal	1000 mm
359	Twin adapter kit	N/A
0225770	Pitched roof flashing plate	N/A
0225765	Flat roof flashing plate	N/A
0225815	Condensate drain kit	N/A
0225820	0,25m extension (pair)	250mm
0225825	0,5m extension (pair)	500mm
0225830	1,0m extension (pair)	1000mm
0225835	2,0m extension (pair)	2000mm
0225840	45° bend (pair)	N/A
0225845	90° bend (pair)	N/A
0225850	Twin bracket (5)	N/A
0225855	Single bracket (5)	N/A

MOUNTING THE BOILER

The fixing holes for the wall-mounting bracket should now be drilled and plugged, an appropriate type and quantity of fixing should be used to ensure that the bracket is mounted securely. Once the bracket has been secured to the wall, mount the appliance onto the bracket.

4.5.3.1 INSTALLATION OF TWIN ADAPTOR KIT (see fig. 9)

- Discard the restrictor ring (supplied with the twin adapter kit).
- Insert the exhaust connection manifold onto the appliance flue outlet.
- Place the silicone seal (supplied with twin adapter kit) over the rim of the exhaust connection manifold.
- Remove one of the blanking plate (located to the left & right of the appliance flue outlet) and – using the same screws – install the air baffle.

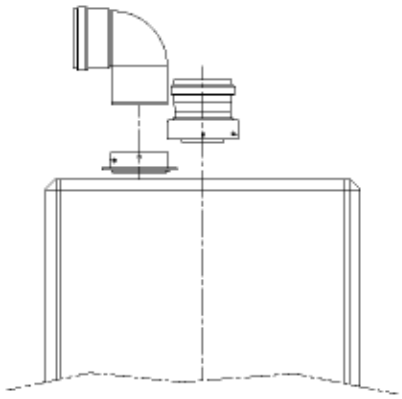

Fig. 9

4.5.3.2 HORIZONTAL TERMINATION (see fig. 10)

The twin flue system must be converted to the dedicated concentric flue kit for termination.

- The horizontal terminal is supplied with a built-in converter box and cannot be shortened.
- A 130mm hole is required for the passage of the concentric terminal through the wall.

Depending on site conditions it may be preferable to install the terminal assembly prior to fitting the twin flue pipes.

Mark and drill a 130mm hole for the passage of the horizontal flue terminal, ensuring that there is a 1° fall back to the boiler (17mm per 1000mm). Insert the terminal assembly into the flue hole.

Push-fit the twin flue pipes onto the concentric to twin converter box ensuring that the exhaust pipe connects to the exhaust connection on the concentric to twin converter. If necessary cut the plain ends (male) of the twin flue pipes to allow connection to the concentric to twin converter.

NOTE

Before cutting twin flue pipes ensure allowances have been made for connection onto the previous piece and onto the concentric to twin converter.

The last twin flue pipes must be pushed 50mm onto the male spigots of the concentric to twin converter.

NOTE

You must ensure that the entire flue system is properly supported and connected.

When cutting an extension to the required length, you should ensure that the excess is cut from the plain end of the extension. Remove any burrs, and check that both seals are located properly.

Seal the flue terminal assembly to the wall using cement or a suitable alternative that will provide satisfactory weatherproofing. The interior and exterior trim can now be fitted.

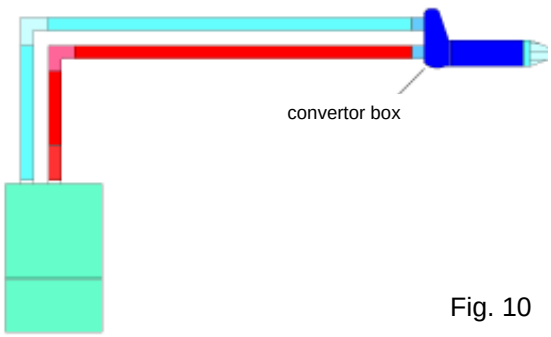

Fig. 10

4.5.3.3 VERTICAL TERMINATION (see fig. 11)

The twin flue system must be converted to the dedicated concentric flue kit for termination.

- The vertical terminal is supplied with a built-in converter box and cannot be shortened.
- A 130mm hole is required for the passage of the concentric terminal through the ceiling and/or roof.

Depending on site conditions it may be preferable to install the terminal assembly prior to fitting the twin flue pipes.

Fit the appropriate flashing plate to the roof and insert the vertical flue terminal through the flashing plate from the outside, ensuring that the collar on the flue terminal fits over the flashing.

Push-fit the twin flue pipes onto the concentric to twin converter ensuring that the exhaust pipe connects to the exhaust connection on the concentric to twin converter.

If necessary cut the plain ends (male) of the twin flue pipes to allow connection to the concentric to twin converter.

NOTE

- Before cutting twin flue pipes ensure allowances have been made for connection onto the previous piece and onto the concentric to twin converter. The last twin flue pipes must be pushed 50mm onto the male spigots of the concentric to twin converter.
- You must ensure that the entire flue system is properly supported and connected.
- Ensure that any horizontal sections of pipe have a 1° fall towards the appliance (17mm per 1000mm).
- The convertor box on the vertical terminal will have to be temporarily removed when inserting the terminal through the flashing.

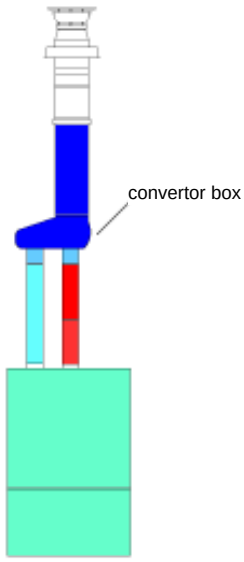

Fig. 11

4.6 CONNECTING THE GAS AND WATER

The appliance is supplied with an accessories pack that contains sealing washers and service valves. When connecting pipe work to the valves, tighten the compression end first, then insert the sealing washers before tightening the valve to the appliance.

NOTE

It will be necessary to hold the valve with one spanner whilst tightening with another.

4.6.1 GAS (see fig. 12)

The appliance is supplied with a 1/2 inch BSP service valve, connect the supply pipe to the inlet of the valve and tighten the connecting nut.

NOTE

It will be necessary to calculate the diameter of the gas supply pipe to ensure the appliance has an adequate supply of gas.

4.6.2 FLOW & RETURN (see fig. 12)

The appliance is supplied with 22mm service valves for the flow and return connections, connect a 22mm pipe to the inlet of each valve and tighten both nuts.

4.6.3 SAFETY VALVE (see fig. 12)

Connect a suitable coupling and 15mm pipe to the safety valve outlet and tighten.The discharge pipe must have a continuous fall away from the appliance to outside and allow any water to drain away thereby eliminating the possibility of freezing. The discharge pipe must terminate in a position where any water - possibly boiling - discharges safely without causing damage or injury, but is still visible.

4.7 CONDENSATE OUTLET (see fig. 12)

During normal operation the boiler produces condensate which is collected in a trap located in the lower part of the boiler. A flexible pipe (condensate outlet pipe) is connected to the outlet of the trap. The flexible pipe must be connected to a plastic waste pipe only. The plastic waste pipe must have a minimum of a 3° fall towards the drain. Any external run of pipe should be insulated to prevent the risk of freezing.

CONNECTING THE CONDENSATE OUTLET

Gently pull the condensate outlet pipe down from its location inside the boiler until approximately 250mm protrudes from the underside of the boiler. Connect a suitable pipe (no less than 20mm diameter) to the outlet pipe and ensure it discharges in accordance with building regulations or other rules in force.

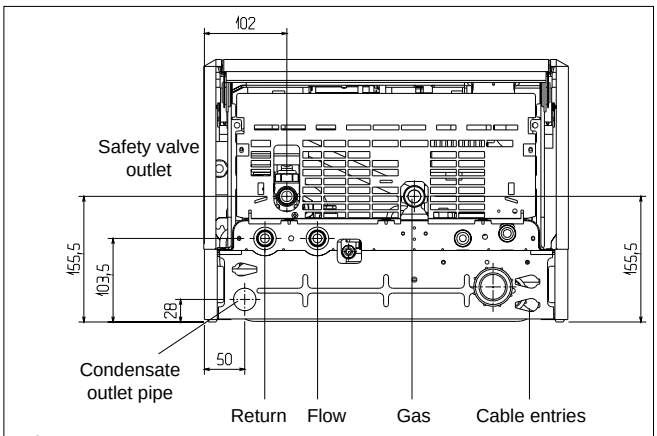

Fig. 12

4.8 ELECTRICAL CONNECTIONS

The electrical supply must be as specified in 3.7. A qualified electrician should connect the electrical supply to the appliance. If controls - external to the appliance - are required, a competent person must undertake the design of any external electrical circuits, please refer to section 8 for detailed instructions.

ANY EXTERNAL CONTROL OR WIRING MUST BE SERVED FROM THE SAME ISOLATOR AS THAT OF THE APPLIANCE.

The supply cable from the isolator to the appliance must be 3-core flexible sized 0,75mm to BS 6500. Wiring to the appliance must be rated for operation in contact with surfaces up to 90°C.

4.8.1 CASING REMOVAL

To gain access to the appliance electrical connections you must first remove the casing, proceed as follows:

- locate and remove the 2 screws that secure the controls fascia to the appliance casing (see fig. 13).
- locate and remove the 2 screws that secure the casing to the back frame of the boiler (see fig. 13).
- gently pull one side of the casing then the other to disengage it from the retaining clips.
- lift the casing upward to disengage it from the top locating hooks and then remove.
- store the casing and screws safely until required. Re-fit in the reverse order.

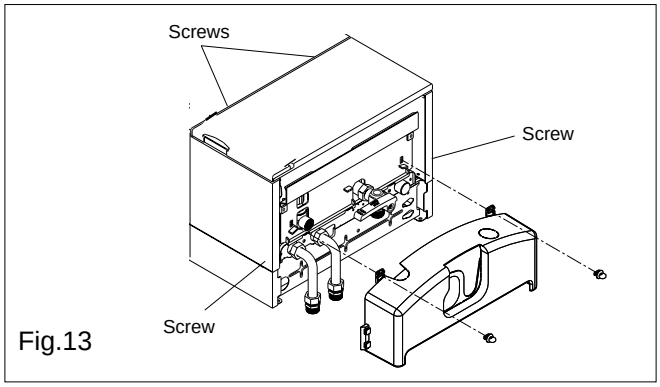

Fig.13

4.8.2 APPLIANCE TERMINAL STRIP

The appliance terminal strip is located behind the control fascia (see fig.14). Locate and remove the 4 screws securing the terminal strip cover.

NOTE

The appliance comes with a factory fitted link to allow basic operation of the boiler via the keypad. If it is anticipated that external controls will be required please refer to the wiring diagrams in section 8 for more detailed information.

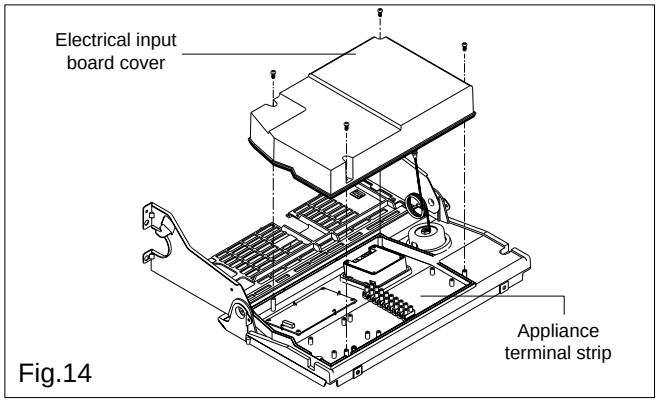

Fig.14

4.8.3 CONNECTING THE MAINS (230V) INPUT (see fig. 15)

Remove the terminal strip cover as described in 4.8.2. Pass the cable through the cable anchorage (see fig. 6). Connect the supply cable wires (earth, live & neutral) to their corresponding terminals on the appliance terminal strip. Ensure that the EARTH wire is left slightly longer than the others, this will prevent strain on the Earth wire should the cable become taut.

Do not remove the 24V link wire (between terminals 4 & 6) unless additional external controls are to be fitted (see section 8). Re-fit the appliance terminal strip cover.

The securing screw on the cable anchorage should now be tightened. This must be done before the control fascia is re-fitted in the upright position. The appliance casing and screws can now be re-fitted.

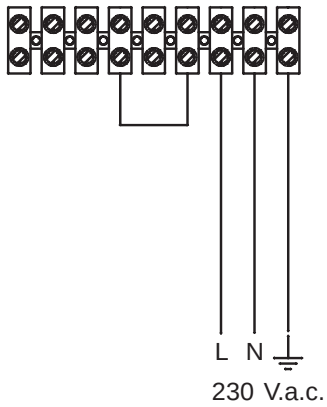

Fig. 15

SECTION 5 COMMISSIONING

5.1 GAS SUPPLY INSTALLATION

Inspect the entire installation including the gas meter, test for soundness and purge. Refer to BS 6891 for specific instruction.

5.2 THE HEATING SYSTEM

The appliance contains components that may become damaged or rendered inoperable by oils and/or debris that are residual from the installation of the system, consequently it is essential that the system be flushed in accordance with the following instructions.

5.3 INITIAL FILLING OF THE SYSTEM

Ensure both flow & return service valves are open, remove appliance casing as described in 4.8.1, identify the automatic air release valve and loosen the dust cap by turning cap anti-clockwise one full turn. IMPORTANT, THERE ARE NO MANUAL AIR RELEASE VALVES LOCATED ON THE APPLIANCE. Ensure all manual air release valves located on the heating system are closed. Using the method of filling as described in fig. 5, slowly proceed to fill the system. As water enters the system the pressure gauge will begin to rise. Once the gauge has reached 1bar close the filling valve and begin venting all manual air release valves, starting at the lowest first. It may be necessary to go back and top-up the pressure until the entire system has been filled. Inspect the system for water soundness, rectifying any leaks.

5.4 INITIAL FLUSHING OF THE SYSTEM

The whole of the heating system must be flushed both cold and hot as detailed in 5.7. Open all radiator or heating valves and the appliance flow & return service valves. Drain the boiler and system from the lowest points. Open the drain valve full bore to remove any installation debris from the boiler prior to lighting. Refill the boiler and heating system as described in 5.3.

5.5 PRE-OPERATION CHECKS

Before attempting to initial lighting of the appliance, the following checks must be carried out:

- ensure all gas service valves from the meter to the appliance are open and the supply pipe has been properly purged;
- ensure the proper electrical checks have been carried out (see 7.7), particularly continuity, polarity and resistance to earth;
- ensure the 3 amp fuse – supplied with the appliance – has been fitted;
- ensure the system has been filled, vented, and the pressure set to 1 bar;
- ensure the flue system has been fitted properly and in accordance with the instructions;
- ensure all appliance service valves are open.

5.6 INITIAL LIGHTING

Ensure the electrical supply to the appliance is switched on. Switch the time clock or programmer to an 'on' position and ensure all external controls are also calling for heat.

The appliance will now operate as described in 1.3. Should the appliance fail to ignite, refer to 5.5 and/or section 7 (fault finding).

5.7 FINAL FLUSHING OF THE HEATING SYSTEM

The system shall be flushed in accordance with BS 7593. If a cleanser is to be used, it shall be from a reputable manufacturer* and shall be administered in strict accordance with the manufacturers instructions.

*Both Sentinel and Fernox manufacture products that have proved suitable for use with Vokera appliances. Vokera Ltd. cannot comment on the suitability of any other such product with our appliances.

5.7.1 INHIBITORS

See 3.11.

5.8 OPERATING PARAMETERS

The Eclipse boiler is supplied with built-in parameter defaults (see 2.11), the following procedure can be used if any parameters require to be adjusted or changed.

- Press the MODE button until a FIXED decimal point appears in LED 1 (see fig. 16).
- Press the STEP button until the desired parameter is shown in LED 1.
- Using the +/- buttons, change the parameter value (shown in LED 2).
- Press the STORE button to save the new value.
- Press the MODE button until no decimal point is shown.

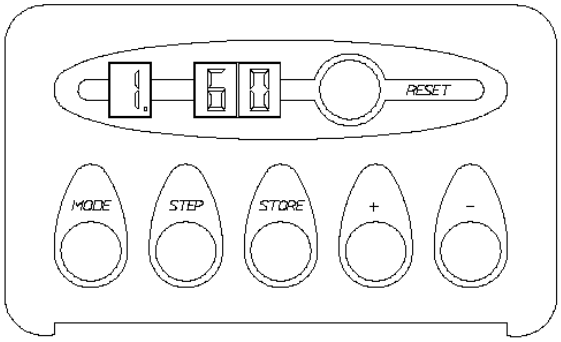

Fig. 16

STEP	OPERATING PARAMETER	VALUE	DEFAULT SETTING
3	Central heating mode	00 = off 01 = on	01 = on
4	Central heating flow temperature	Variable between 20° 90°C	75°C

5.9 FUNCTIONAL PARAMETERS

These parameters should only be changed or adjusted by the commissioning engineer or service technician. To change or adjust the functional parameters, it is necessary to access the appliance engineer mode.

- Press and hold the MODE and STEP buttons simultaneously, LED 1 should now show “C” (see fig. 17).
- Whilst continuing to hold down the MODE and STEP buttons, using the +/- buttons, adjust LED 2 until it shows “33”.
- Press STORE.
- LED 2 will now flash once, the MODE and STEP buttons can now be released.
- Press the MODE button until it shows a FIXED decimal point (see fig. 16).
- Press the STEP button until it shows the desired parameter (LED 1).
- Adjust the value (LED 2) using the +/- buttons
- Press STORE to save the new setting.
- Press the RESET button to exit the appliance engineer mode.

IMPORTANT

Under no circumstances should any parameters - other than those shown - be changed or adjusted. Please refer to section 7 before making any adjustments to the fan speed parameters of the boiler.

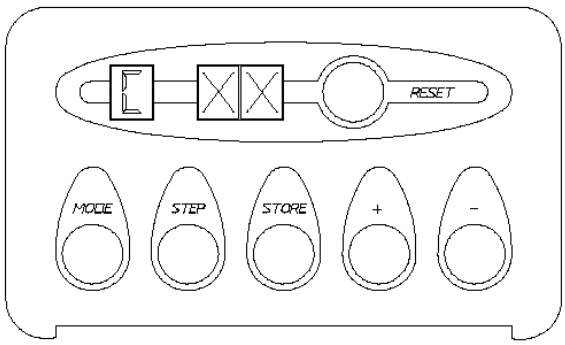

Fig. 17

5.10 RANGE RATING

The output of the boiler is automatically adjusted by a continuous air/gas modulation system. The system is controlled by the NTC thermistors (flow & return temperature sensors) which ensures stability of temperature irrespective of load conditions. However the appliance also has a range rating facility which can be used to limit the maximum output if required. Please refer to section 7 for more details.

5.11 SETTING THE SYSTEM DESIGN PRESSURE

The design pressure should be a minimum of 1 bar and a maximum of 1,5 bar.

The actual reading should ideally be 1 bar plus equivalent height in metres (0,1 bar = 1 metre) to the highest point in the system above the base of the appliance (up to the maximum of 1,5 bar total).

N.B. The safety valve is set to lift at 3 bar/30 metres/45 psig.

To lower the system pressure to the required value, pull lever on head of safety valve to release water until the required figure registers on the pressure gauge (see fig. 1).

5.12 REGULATING THE CENTRAL HEATING SYSTEM

Fully open all radiator and circuit valves and run the appliance for both heating and hot water until heated water is circulating. If conditions are warm remove any thermostatic heads. Adjust radiator return valves and any branch circuit return valves until the individual return temperatures are correct and are approximately equal.

STEP	FUNCTION PARAMETER	VALUE		DEFAULT SETTING	
		216	226	216	226
A	Anti-cycle	Variable between 0-30 (where 1=10,2 seconds)	Variable between 0-30 (where 1=10,2 seconds)	9 (91,8 seconds)	9 (91,8 seconds)
b	Pump over-run	Variable between 3-99 (where 1=1 minute)	Variable between 3-99 (where 1=1 minute)	10 (10 minutes)	10 (10 minutes)
J	Max. fan speed	Variable between 13-55 (where 1=100 RPM)	Variable between 13-55 (where 1=100 RPM)	40 (4000 RPM)	55 (5500 RPM)
n	Min. fan speed	Variable between 13-55 (where 1=100 RPM)	Variable between 13-55 (where 1=100 RPM)	13 (1300 RPM)	17 (1700 RPM)
o	Soft-light fan speed	Variable between 0-100 (where 0.0=100%)	Variable between 0-100 (where 80=80%)	100 (%)	80 (%)

5.13 FINAL CHECKS

- ENSURE ALL TEST NIPPLES ON THE APPLIANCE GAS VALVE ARE TIGHT AND HAVE BEEN CHECKED FOR SOUNDNESS.
- ENSURE THE APPLIANCE FLUE SYSTEM IS FITTED CORRECTLY AND IS PROPERLY SECURED.
- ENSURE ALL PIPE WORK IS RE-CHECKED FOR SOUNDNESS.
- RE-FIT APPLIANCE CASING.
- COMPLETE APPLIANCE LOGBOOK.

Complete details of the boiler, controls, installation and commissioning in the logbook supplied with the boiler. This is an important document, which must be correctly completed and handed to the user. Failure to install and commission the appliance to the manufacturers instructions may invalidate the warranty.

5.14 INSTRUCTING THE USER

Hand over all documentation supplied with this appliance – including these instructions – and explain the importance of keeping them in a safe place.

Explain to the user how to isolate the appliance from the gas, water and electricity supplies, and the locations of all drain points.

Show the user how to operate the appliance and its associated controls correctly.

Show the user the location of the filling valve and how to top-up the system pressure correctly, and show the location of all manual air release points.

Explain to the user how to turn off the appliance for both long and short periods, and advise on the necessary precautions to prevent frost damage.

SECTION 6 SERVICING

6.1 GENERAL

To ensure the continued safe and efficient operation of the appliance, it is recommended that it is checked and serviced at regular intervals.

The frequency of servicing will depend upon the particular installation conditions, but in general, once per year should be adequate.

It is the law that any servicing work is carried out by a competent person such as a Vokera engineer, an approved service agent, British Gas, or other CORGI registered personnel.

The following instructions apply to the appliance and its controls, but it should be remembered that the central heating system will also require attention from time to time.

6.2 ROUTINE ANNUAL SERVICING

- Check the operation of the appliance and ensure it functions as described in section 7.
- Compare the performance of the appliance with its design specification. The cause of any noticeable deterioration should be identified and rectified without delay.
- Thoroughly inspect the appliance for signs of damage or deterioration especially the flue system and the electrical apparatus.
- Check and adjust – if necessary – the system design pressure (see 5.11).
- Ensure both the burner and heat exchanger are clean and free from any debris or obstruction.
- Carry out an analysis of the flue gases (see 7.4), and visually check the condition of the entire flue assembly.
- Compare the results with the appliance design specification. Any deterioration in performance must be identified and rectified without delay.
- Inspect all joints for signs of leakage and repair if necessary.
- Refer to the commissioning section and/or replacement of parts section for detailed instruction if required.

6.3 REPLACEMENT OF COMPONENTS

Although it is anticipated that this appliance will give years of reliable, trouble free service, the life span of components will be determined by factors such as operating conditions and usage. Should the appliance develop a fault, the fault finding section will assist in determining which component is malfunctioning.

6.4 COMPONENT REMOVAL PROCEDURE

To remove a component, access to the interior of the appliance is essential. Isolate the appliance from the electrical supply and remove the fuse. And when necessary, close all service valves on

the appliance, remove the appliance casing as described in section 4.8.1. Drain the water content from the appliance via the safety valve. Ensure some water absorbent cloths are available to catch any residual water that may drip from the appliance or removed component. Undertake a complete commissioning check as detailed in section 5, after replacing any component. **ALWAYS TEST FOR GAS SOUNDNESS IF ANY GAS CARRYING COMPONENTS HAVE BEEN REMOVED OR DISTURBED.**

6.5 PUMP HEAD (see fig. 18)

Carry out component removal procedure as described in 6.4.
Using a 4mm Allen key or 'T' bar, unscrew and remove the four Allen screws that hold the pump in position, pull firmly on the pump head to release it from the base. Disconnect the electrical leads.
Replace in the reverse order.

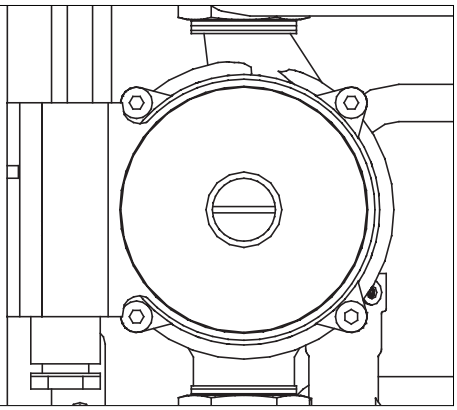

Fig. 18

6.6 SAFETY VALVE (see fig. 19)

Carry out component removal procedure as described in 6.4.
Disconnect the outlet pipe from the safety valve. Remove safety valve locking screw from the underside of the appliance manifold. Pull safety valve free from manifold.
Replace in the reverse order.

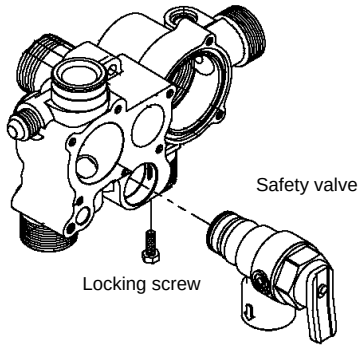

Fig. 19

6.7 AUTOMATIC AIR RELEASE VALVE (AAV)

Carry out component removal procedure as described in 6.4.
Using a suitable pair of pump pliers, unscrew the AAV from its position.
Replace in the reverse order.

6.8 PRESSURE GAUGE (see fig. 20)

Carry out component removal procedure as described in 6.4.
Remove pressure gauge locking screw, located on manifold, and withdraw the pressure gauge pipe, locate the spring tabs on the pressure gauge body, push and hold tabs in, to enable extraction of the gauge from its location.
Replace in the reverse order.

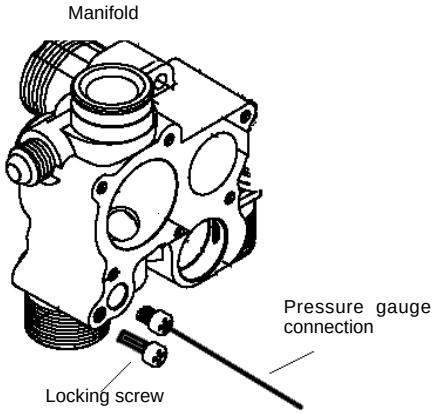

Fig. 20

6.9 NTC THERMISTORS (temperature sensors)

Carry out component removal procedure as described in 6.4.

Flow & return sensors (see fig. 1 & 21)
Pull back protective boot and remove the 2 spade connectors. Slacken and remove the 2 securing screws.
Replace in the reverse order.

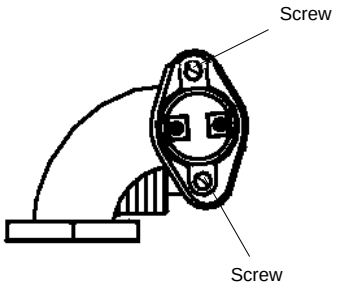

Fig. 21

6.10 PRINTED CIRCUIT BOARD (PCB) (see fig. 22)

Carry out component removal procedure as described in 6.4.

- Locate and remove the 4 screws that secure the PCB housing cover, then remove cover.
- After carefully taking note of all wiring connections, disconnect all wiring from the PCB.
- Locate and remove the PCB housing securing screws, remove PCB housing.
- Remove the 4 screws that secure the transformer to the PCB housing.
- Locate and remove the 3 screws that secure the PCB to the housing.

Replace in the reverse order.

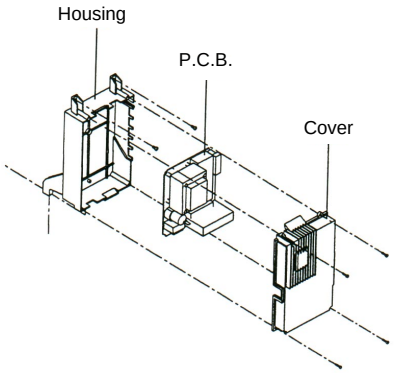

Fig. 22

6.11 GAS VALVE (see fig. 23)

Carry out component removal procedure as described in 6.4.
The gas valve must be changed as complete unit. Unclip and remove the air chamber cover. Disconnect the electrical plug from the gas valve. Disconnect silicone tube from gas valve regulator. Slacken and unscrew gas valve inlet and outlet connections. **Please note**, the sealing washers must be discarded and replaced with new sealing washers. The gas valve can now be removed. Replace in the reverse order. Refer to section seven for detailed instructions on how to set-up the gas valve. **WARNING, A GAS SOUNDNESS CHECK MUST BE CARRIED OUT.**

6.12 FAN (see fig. 23)

Carry out component removal procedure as described in 6.4.
Unclip and remove the air chamber cover.
Disconnect the electrical plug from the fan.
Locate and remove the 4 bolts that secure the fan to the pre-mix manifold.
Replace in reverse order.

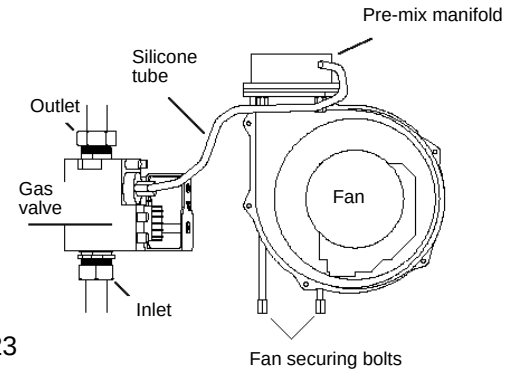

Fig. 23

6.13 BURNER (see fig. 24)

Carry out component removal procedure as described in 6.4.
Unclip and remove the air chamber cover.
Locate and remove the 8 nuts (10mm) securing the pre-mix manifold/burner assembly. Disconnect the gas valve outlet pipe at its connection to the pre-mix manifold. Disconnect the silicone pipe from the pre-mix manifold. Gently pull away the fan/pre-mix manifold assembly from the heat exchanger. Remove the earth wire from the burner earth tab and gently lift the burner from its location.

Replace in the reverse order. **Please note**, ensure all seals are in good condition, taking care to ensure they are replaced correctly.

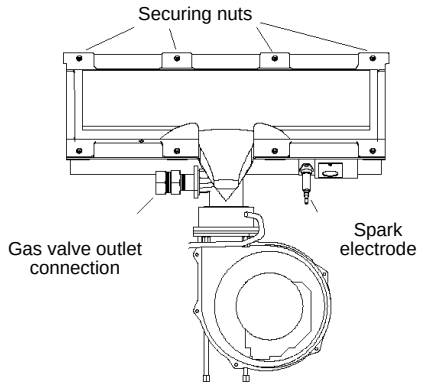

Fig. 24

6.14 ELECTRODE (see fig. 24 & 25)

Carry out component removal procedure as described in 6.4.
Unclip and remove the air chamber cover.
Remove the electrode lead. Remove the 2 screws that secure the electrode to the combustion cover, and gently withdraw the electrode.
Replace in the reverse order, ensuring that the electrode seal is in good condition and that the combustion cover insulation board is undisturbed.

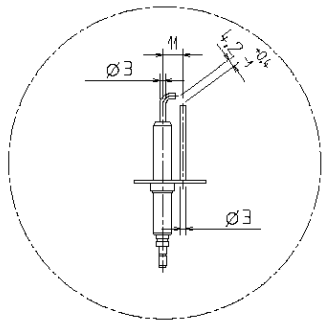

Fig. 25

6.15 INJECTOR (see fig. 26)

Carry out component removal procedure as described in 6.4.
Unclip and remove the air chamber cover.
Remove the fan as detailed in 6.12 using a 17mm socket, locate and unscrew the injector.
Replace in the reverse order.

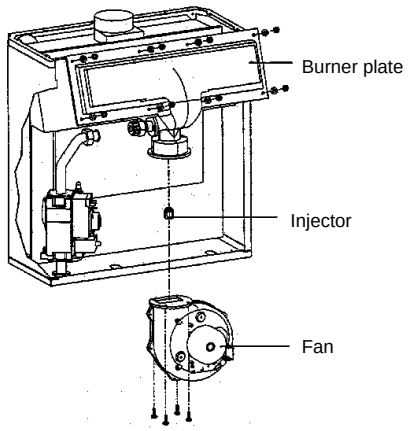

Fig. 26

6.16 HYDRAULIC MANIFOLD ASSEMBLY (see fig. 28)

Carry out component removal procedure as described in 6.4.

Refer to figure 27 for an exploded view of the manifold and its internal components. Care should be taken when removing the manifold cover or when levering the automatic bypass from its position.

Replace in the reverse order, ensuring that the components are seated and located properly.

NOTE

It may be prudent to replace the seals and/or diaphragm whenever tha manifold assembly is disturbed.

6.17 CONDENSE TRAP (see fig. 27)

Carry out component removal procedure as described in 6.4.

Remove the PCB housing as described in 6.10. Disconnect the pressure switch tube from the condense trap. Disconnect both the inlet and outlet connections from the trap. Carefully withdraw the trap, keeping it upright to avoid spillage.

Replace in the reverse order.

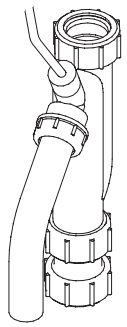

Fig. 27

6.18 CONDENSE PRESSURE SWITCH (see fig. 29)

Carry out component removal procedure as described in 6.4.

Unclip and remove the air chamber cover. Disconnect the electrical wiring and pressure tube from the pressure switch. Remove the retaining screws and/or clip.

Replace in the reverse order.

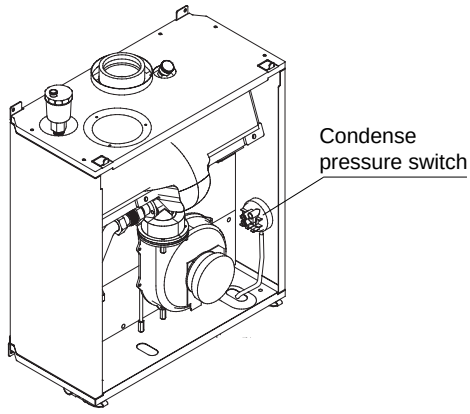

Fig. 29

6.19 COMBUSTION COVER (see fig. 30)

Carry out component removal procedure as described in 6.4.

Unclip and remove the air chamber cover. Remove the gas valve as described in 6.11. Remove the condense pressure switch as described in 6.20. Disconnect the electrical connection from the fan, disconnect the spark electrode lead and earth wire from the spark electrode. Locate and remove the twelve 10mm securing nuts. Carefully remove the combustion cover from the locating studs. Remove the combustion cover from the air chamber, withdrawing it at a slight angle from the right hand

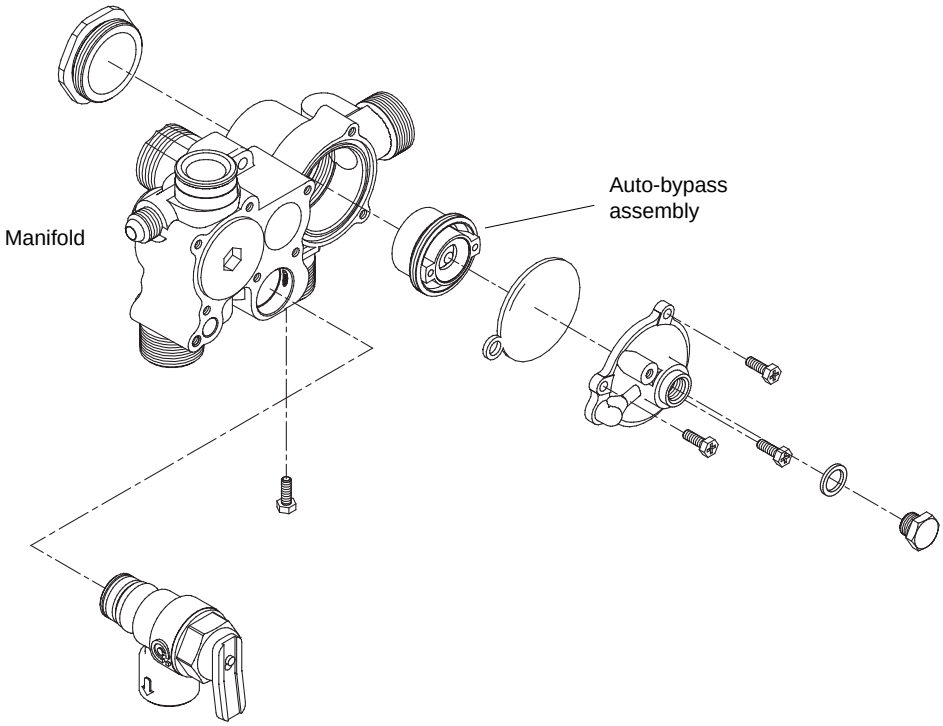

Fig. 28

side. Replace in the reverse order, ensuring that all seals and insulation panels are undamaged and in good condition.

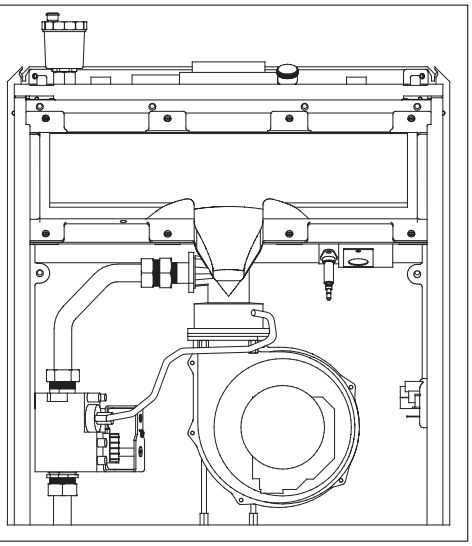

Fig. 30

6.20 EXPANSION VESSEL (see fig. 1)

Due to the compact design of this appliance, removal and/or replacement of the expansion vessel may require the appliance to be removed from the wall, if this is deemed impractical, an external expansion vessel may be fitted to the return pipe as close to the appliance as possible.

6.20.1 EXPANSION VESSEL (removal)

Carry out component removal procedure as described in 6.4.
Disconnect the flue from the appliance.
Disconnect the expansion pipe from the hydraulic manifold. Locate and remove the 2 screws that secure the vessel to the rear frame.
The expansion vessel can now be removed.
Replace in the reverse order. Ensure all seals are in good condition, taking care to ensure they are replaced correctly.

6.21 STATUS PCB (see fig. 14)

Carry out component removal procedure as described in 6.4.
Refer to 4.8.2 for details on how to remove the appliance terminal strip cover. Carefully note the positions of all connections. Remove the wiring and plugs from the PCB. Locate and remove the securing screws. Remove PCB.
Replace in the reverse order, ensuring correct configuration of wiring.

7.1 CHECKING APPLIANCE OPERATION

When carrying out any repairs or servicing to the appliance, the relevant commissioning and/or set-up procedure must be undertaken to ensure the continued safe operation of the appliance. Particular attention should be made to ensure gas soundness, water soundness, and the electrical integrity of the appliance.

7.2 APPLIANCE MODE OF OPERATION

7.2.1 START-UP

When power is first supplied to the appliance it will go through a self-purge procedure whereby the pump & fan will be momentarily energised. The boiler will then operate in either one of the following modes:

- At rest
- Heating and/or Hot Water request

7.2.2 AT REST

When there is no demand for heating or hot water and the appliance remains inactive for a period of 24 hours, the pump will be energised for a few moments to prevent it from seizing. Should the flow temperature sensor fall below 7°C the pump will be energised. If the flow sensor temperature falls to below 3°C the burner will be lit and the appliance will operate at the minimum output until the temperature of the flow sensor reaches 10°C, whereupon the pump will continue to run in pump over-run mode.

7.2.3 MODE OF OPERATION (heating/hot water request)

When there is a request for heat via the progremmer and/or external controls, the pump and fan will be activated via the flow temperature sensor. When the fan is sensed to be operating correctly, the ignition sequence commences. The speed of the fan and therefore the output of the boiler is determined by the temperature of the water sensed by the flow & return temperature sensors, consequently a high temperature at the flow sensor results in a lower fan speed. As the water temperature increases, the temperature sensors – located on the flow & return pipes of the boiler – reduce the fan speed via the electronic circuitry. Depending on the load, either the water temperature will continue to rise until the set point is achieved or the water temperature will fall whereby fan speed will increase relative to the output required. When the boiler has reached the set point, the burner will switch off. The built-in anti-cycle device prevents the burner from re-lighting for an adjustable period of time (factory default is 3 minutes). When the temperature of the flow sensor falls below the set-point, the burner will re-light.

7.3 CHECKING/ADJUSTING FAN SPEED

To check the fan speeds, you must first access the engineer mode. The fan speed should only be changed or adjusted by the commissioning engineer or service technician (see 5.9).

To access the appliance engineer mode:

- press and hold the MODE and STEP buttons simultaneously, LED 1 should now show 'C' (see fig. 17).
- whilst continuing to hold down the MODE and STEP buttons, using the +/- buttons, adjust LED 2 until it shows '33'.
- press STORE
- LED 2 will now flash twice, the MODE and STEP buttons can now be released
- press the MODE button until it shows a FIXED decimal point (see fig. 16).

7.3.1 MAXIMUM FAN SPEED

- Press the STEP button until it shows the letter 'J' (LED 1).
- Adjust the value (LED 2) using the +/- buttons (see fig. 31).
- Press STORE to save the new setting.

7.3.2 MINIMUM FAN SPEED

- Press the STEP button until it shows the letter 'N' (LED 1).
- Adjust the value (LED 2) using the +/- buttons until it shows '17'.
- Press STORE to save the new setting.

7.3.3 SOFT-LIGHT FAN SPEED

- Press the STEP button until it shows the letter 'O' (LED 1).
- Adjust the value (LED 2) using the +/- buttons until it shows '80'
- Press STORE to save the new setting.

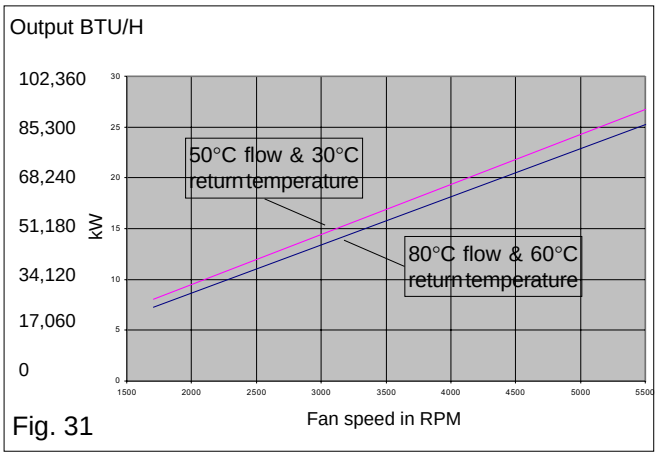

Fig. 31

7.3.4 FAN SPEED CONFIRMATION

To verify that the new fan speed has been accepted into the memory:

- press and hold the MODE and '+' buttons for 3 Seconds;
- allow the boiler to purge (approx. 10 seconds);

- when ‘H’ is displayed in LED 1, press the MODE button until LED 1 shows an alternating cursor (see fig. 32);
- when the digit is to the left, LED 2 shows the first two digits of the maximum fan speed;
- when the digit is to the right, LED 2 shows the last two digits of the maximum fan speed;
- press the MODE button until a fixed decimal is shown in LED 1;
- press and hold the MODE and ‘-–‘ buttons until ‘L’ appears in LED 1;
- press the MODE button until LED 1 shows an alternating cursor (see fig. 32);
- when the digit is to the left, LED 2 shows the first two digits of the minimum fan speed;
- when the digit is to the right, LED 2 shows the last two digits of the minimum fan speed.

NOTE

The actual fan speed displayed may not exactly match what has been programmed. However, providing the displayed speed is within 200 RPM (+/-) of the programmed speed, this is acceptable.

7.3.5 EXIT ENGINEER MODE

Press the RESET button to exit the appliance engineer mode.

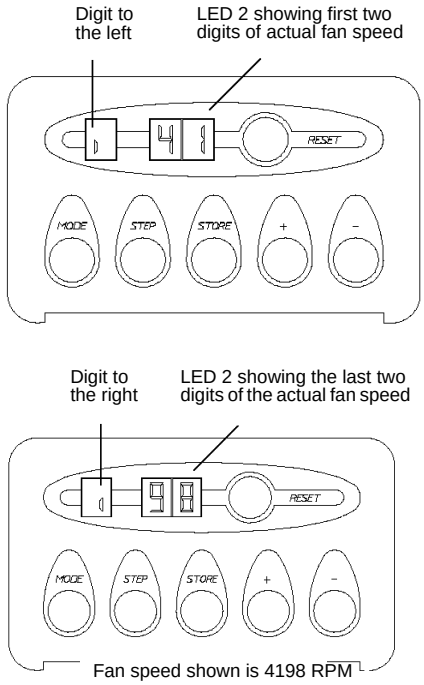

Fig. 32

7.4 ADJUSTING THE GAS VALVE

THE GAS VALVE MUST BE SET-UP OR ADJUSTED WITH THE AID OF A PROPERLY CALIBRATED FLUE GAS ANALYSER.

Remove the appliance casing as detailed in 4.8.1. Unclip and remove the air chamber cover. Set the flue gas analyser to read CO_2 and insert the probe into the flue analysis test point (see fig. 1). Using the procedure as detailed in 7.3 & 7.3.4 respectively, enter the appliance engineer mode and set the fan speed to minimum.

7.4.1 MINIMUM SETTING

With the boiler operating at minimum output the CO_2 reading should be 8.6% (+/- 0.2%). If the CO_2 reading is correct, proceed to 7.4.2. If the CO_2 reading is incorrect, the minimum gas pressure must be adjusted as follows:

- using a suitable screwdriver, very slowly turn the minimum adjustment screw (see fig. 33) – clockwise to increase, counter clockwise to decrease – until the correct value is displayed on the CO_2 analyser (allow time for the analyser to stabilise).
- using the procedure detailed in 7.3.4, change the fan speed momentarily from minimum to maximum, then back to minimum.
- check that the correct value is still being obtained. If not, repeat the above procedure.

7.4.2 MAXIMUM SETTING

The maximum setting must only be checked and/or adjusted after the correct minimum setting has been verified. Using the procedure detailed in 7.3.4, change the fan speed from minimum to maximum.

With the boiler operating at maximum output the CO_2 reading should be 8.6% (+/- 0.2%). If the CO_2 reading is correct, press the RESET button to exit the appliance engineer mode. If the CO_2 reading is incorrect, the maximum gas pressure must be adjusted as follows:

- using a suitable screwdriver, very slowly turn the maximum adjustment screw (see fig. 33) – clockwise to increase, counter clockwise to decrease – until the correct value is displayed on the CO_2 analyser (allow time for the analyser to stabilise).
- using the procedure detailed in 7.3.4, change the fan speed momentarily from maximum to minimum, then back to maximum.
- check that the correct value is still being obtained. If not, repeat the above procedure.
- press the RESET button to exit the appliance engineer mode.

Remove the analyser test probe from the analysis test point and refit cap. Refit the air chamber cover. Refit appliance casing.

NOTE

You should ensure that all radiators or heat emitters are fully open during the above procedures. This will ensure that the fan speed (output) of the boiler is not compromised due to a high flow temperature.

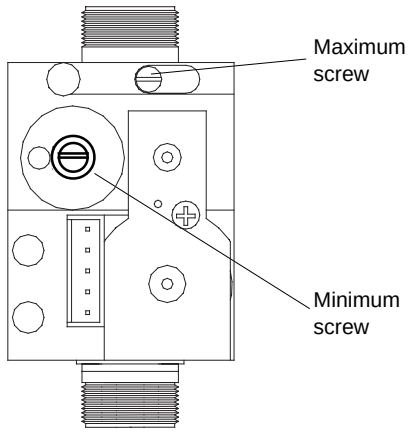

Fig. 33

7.5 LED 1 STATUS CODES

When the boiler is operating normally (without fault), LED 1 displays the current status of the boiler whilst LED 2 will normally display the relevant outlet temperature.

Status	LED 1	LED 2
Standby	0	
Purge	1	Flow/return temp.
Ignition	2	Flow/return temp.
Heat request mode	3	Flow temperature
N/A	4	N/A
Fan-speed low	5	Flow/return temp.
Built-in delay	6	Flow/return temp.
CH over-run	7	Flow temperature
DHW over-run	8	Return temperature
High temperature	9	Flow/return temp.

In addition to the above operating status codes, the boiler may also display intermittent anomaly codes as featured below.

LED 1	LED 2	Reason for lockout
E	18	Flow sensor above 95°C
E	19	Return sensor above 95°C
E	24	Temperature differential inverted
E	25	Rapid temperature rise
E	30	Flow sensor 35°C higher than return sensor
E	65	Insufficient fan speed after 1 minute

7.6 LOCKOUT FAULT CODES

The built-in fault diagnostic system automatically displays a unique fault code that can be used to determine why the boiler has locked out.

LED 1	LED 2	Reason for lockout
0	00	False flame
1	01	24V short circuit
2	02	No flame detected
4	03	Internal fault (PCB)
4	04	Lockout then power off
4	05	Internal fault (PCB)
4	06	Internal fault (PCB)
4	07	Internal fault (PCB)
4	08	Internal fault (PCB)
4	09	Internal fault (PCB)
4	10	Internal fault (PCB)
4	11	Internal fault (PCB)
4	12	Internal fault (PCB)
4	13	Internal fault (PCB)
4	14	Internal fault (PCB)
4	15	Internal fault (PCB)
4	16	Internal fault (PCB)
4	17	Internal fault (PCB)
4	24	Flow/return sensors reversed
4	26	Internal fault (PCB)
4	30	Difference between flow & return temperature too high
4	31	Short circuit on flow sensor
4	32	Short circuit on return sensor
4	33	Internal fault (PCB)
4	36	Open circuit on flow sensor
4	37	Open circuit on return sensor
4	38	Internal fault (PCB)
4	41	Internal fault (PCB)
4	42	Internal fault (PCB)
4	44	Internal fault (PCB)
4	60	Internal fault (PCB)
5	28	No signal from fan
5	29	No signal from fan
5	61	Internal fault (PCB)
5	65	Insufficient fan speed
9	12	Condense trap blocked
9	18	Flow temperature too high
9	19	Return temperature too high
9	25	Rapid temperature rise

7.7 DIAGNOSTIC RECALL

In addition to displaying a fault code, the appliance memorises the operating conditions at the time of lockout, this information can be recalled and displayed using the following procedure:

- access the appliance engineer mode as detailed in 5.9.
- press the MODE button until a flashing '1' appears in LED 1.
- press the STEP button to recall the information as detailed below.

LED 1 shows 1	
LED 2 shows	**Reason**
00	False flame
01	24V short circuit
02	No flame detected
03	Internal fault (PCB)
04	Lockout then power off
05	Internal fault (PCB)
06	Internal fault (PCB)
07	Internal fault (PCB)
08	Internal fault (PCB)
09	Internal fault (PCB)
10	Internal fault (PCB)
11	Internal fault (PCB)
12	Internal fault (PCB)
13	Internal fault (PCB)
14	Internal fault (PCB)
15	Internal fault (PCB)
16	Internal fault (PCB)
17	Internal fault (PCB)
24	Flow/return sensors reversed
26	Insufficient gas pressure
30	Internal fault (PCB)
31	Short circuit on flow sensor
32	Short circuit on return sensor
33	Internal fault (PCB)
36	Open circuit on flow sensor
37	Open circuit on return sensor
38	Internal fault (PCB)
41	Internal fault (PCB)
42	Internal fault (PCB)
44	Internal fault (PCB)
60	Internal fault (PCB)
28	No signal from fan
29	No signal from fan
61	Internal fault (PCB)
65	Insufficient fan speed
12	Condense trap blocked
18	Flow temperature too high
19	Return temperature too high
25	Rapid temperature rise

LED 1 shows 2	
LED 2 shows	**Reason**
0	Standby
1	Purge
2	Ignition
3	Heat request
4	N/A
5	Fan-speed low
6	Built-in delay
7	Pump over-run
8	N/A
9	High temperature

LED 1 shows 3	
LED 2 shows °C	Temperature of flow sensor at time of lockout

LED 1 shows 4	
LED 2 shows °C	Temperature of return sensor at time of lockout

Press the RESET button to exit the appliance engineer mode.

7.8 TEMPERATURE SENSOR VIEWING MODE

The current temperature of the two temperature sensors can be viewed individually via the LED display, in addition the set-point of the flow or return sensor can also be viewed (depending on mode of operation).

To access the viewing mode:

- press the MODE button until a flashing decimal point is displayed in LED 1.
- press the STEP button to display the relevant information in LED 2 (see below).

LED 1 SHOWS	LED 2 SHOWS
1	Flow sensor temperature
2	Return sensor temperature
3	N/A
4	N/A
5	N/A
6	Set-point (dependant on mode)
7	Temperature rise per second
8	Return rise per 8 seconds
9	

7.9 CHECKING THE EXPANSION VESSEL

Carry out the component removal procedure as described in 6.4. You must ensure that the boiler is completely drained of water.

Using a suitable pressure gauge, remove dust cap on expansion vessel and check the charge pressure. The correct charge pressure should be 1.0 bar ± 0.1 bar. If the charge pressure is less, use a suitable pump to increase the charge.

Please note, you must ensure the safety valve is in the open position whilst re-charging takes place. Replace the dust cap and carry out the relevant commissioning procedure.

7.10 EXTERNAL FAULTS

Before carrying out any fault-finding or component replacement, ensure the fault is not attributable to any aspect of the installation.

For example external wiring fault, service valves closed, gas supply turned off, etc. The table below may assist in identifying some common installation faults.

Fault code Displayed	Possible cause
202	Gas turned off
	Air in gas pipe
	Insufficient gas
918	Pump seized
	Flow/return service valve closed
436	Flow sensor cable disconnected
437	Return sensor cable disconnected

7.11 ELECTRICAL CHECKS

Any electrical checks must be carried out by a suitably qualified person.

7.11.1 EARTH CONTINUITY TEST

Isolate the appliance from the electrical supply, and using a suitable multi-meter carry out a resistance test. Connect test leads between an appliance earth point and the earth wire of the appliance supply cable. The resistance should be less than 1 ohm. If the resistance is greater than 1 ohm check all earth wires and connectors for continuity and integrity.

7.11.2 SHORT CIRCUIT CHECK

Isolate the appliance from the electrical supply, and using a suitable multi-meter, carry out a short circuit test between the Live & Neutral connections at the appliance input board (see fig.15).

Repeat above test on the Live & Earth connections at the appliance input board (see fig.15).

NOTE

Should it be found that a fuse has failed but no fault is indicated, a detailed continuity.

Check will be required to trace the fault. A visual inspection of components may also assist in locating the fault.

7.11.3 POLARITY CHECK

With the appliance connected to the electrical supply and using a suitable Multi-meter, carry out the following voltage tests:

- connect test leads between the Live & Neutral connections at the appliance input board (see fig.15). The meter should read approximately 230V ac. If so proceed to next stage. If not, see 7.11.4.
- connect test leads between the Live & Earth connections at the appliance input board (see fig.15). The meter should read approximately 230V ac. If so proceed to next stage. If not, see 7.11.4.

- Connect test leads between the Neutral & Earth connections at the appliance input board (see fig.15). The meter should read approximately 0 – 15Vac. If so polarity is correct. If not, see 7.11.4.

7.11.4 REVERSED POLARITY OR SUPPLY FAULT

Repeat the above tests at the appliance isolator, if testing reveals correct polarity and/or supply at the isolator, re-check wiring and connections between the isolator and the appliance.
If tests on the isolator also reveal reversed polarity or a supply fault, consult the local electricity supplier for advice.

7.11.5 RESISTANCE TO EARTH CHECK

Isolate the appliance from the electrical supply, and using a suitable multi-meter carry out a resistance test. Connect test leads between the Live & Earth connections at the appliance input board (see fig.15). If the meter reads other than infinity there is a fault that must be isolated, carry out a detailed continuity check to identify the location of the fault.

IMPORTANT

These series of checks must be carried out before attempting any fault-finding procedures on the appliance. On completion of any task that required the disconnection and re-connection of any electrical wiring or component, these checks must be repeated.

7.11.6 FUSES

The appliance is equipped with spare fuses. These fuses are located on the covers of the terminal strip and main PCB respectively. If a fuse has blown it is usually indicative of an external wiring fault or a faulty component such as the pump, fan, valve actuator, etc. Under no circumstances should a blown fuse be replaced with one of a higher rating.

7.12 FAULT FINDING

BEFORE ATTEMPTING ANY FAULT DIAGNOSIS OR REPAIR THE FOLLOWING PROCEDURE SHOULD BE CARRIED OUT:

- carry out the relevant electrical checks as detailed in 7.11;
- disconnect any external wiring from the appliance terminal strip (terminals 4 & 6) and replace with a solid link wire;
- ensure the appliance is protected – externally – by a 3 amp fuse.

IMPORTANT

The Eclipse boiler utilises 24V switching. Any external controls that are directly connected to the boiler must be suitable for 24V applications and shall be voltage free. Under no circumstances should a 230V supply be connected to terminals 4 & 6 of the appliance terminal strip.

7.12.1 FAULT FINDING TESTS

If a lockout code is displayed on LED's 1 & 2, please refer to 7.6 for the cause of the lockout.

FAULT	GO TO
No display, boiler inactive	Test 1 Then 1A
No display, pump running	Test 1A
No display, pump running, fan speed alternating	Test 1A
No display, boiler working okay	Test 1A
Pump failure	Test 2
Fan fault	Test 3
Ignition fault	Test 4

7.12.2 WIRING DIAGRAMS

Figures 35 & 36 indicate the positions of all plugs, fuses and internal wiring configuration.

7.12.3 FAULT FINDING TEST '1'

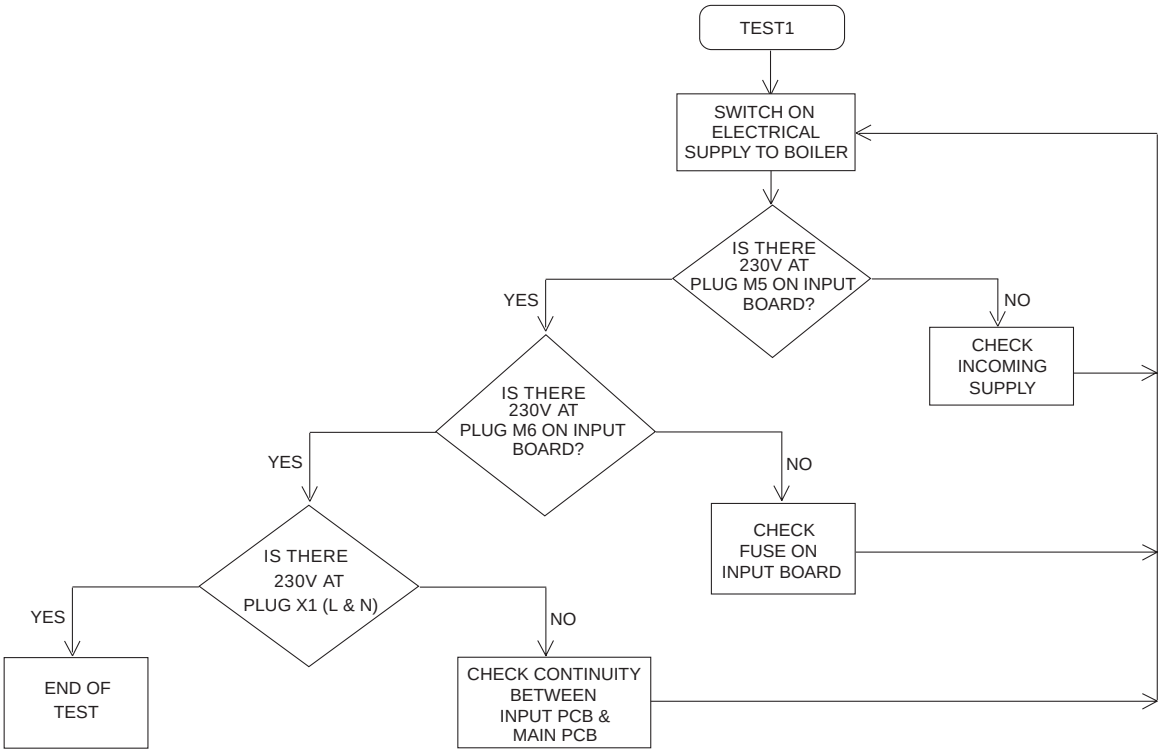

7.12.4 FAULT FINDING TEST '1A'

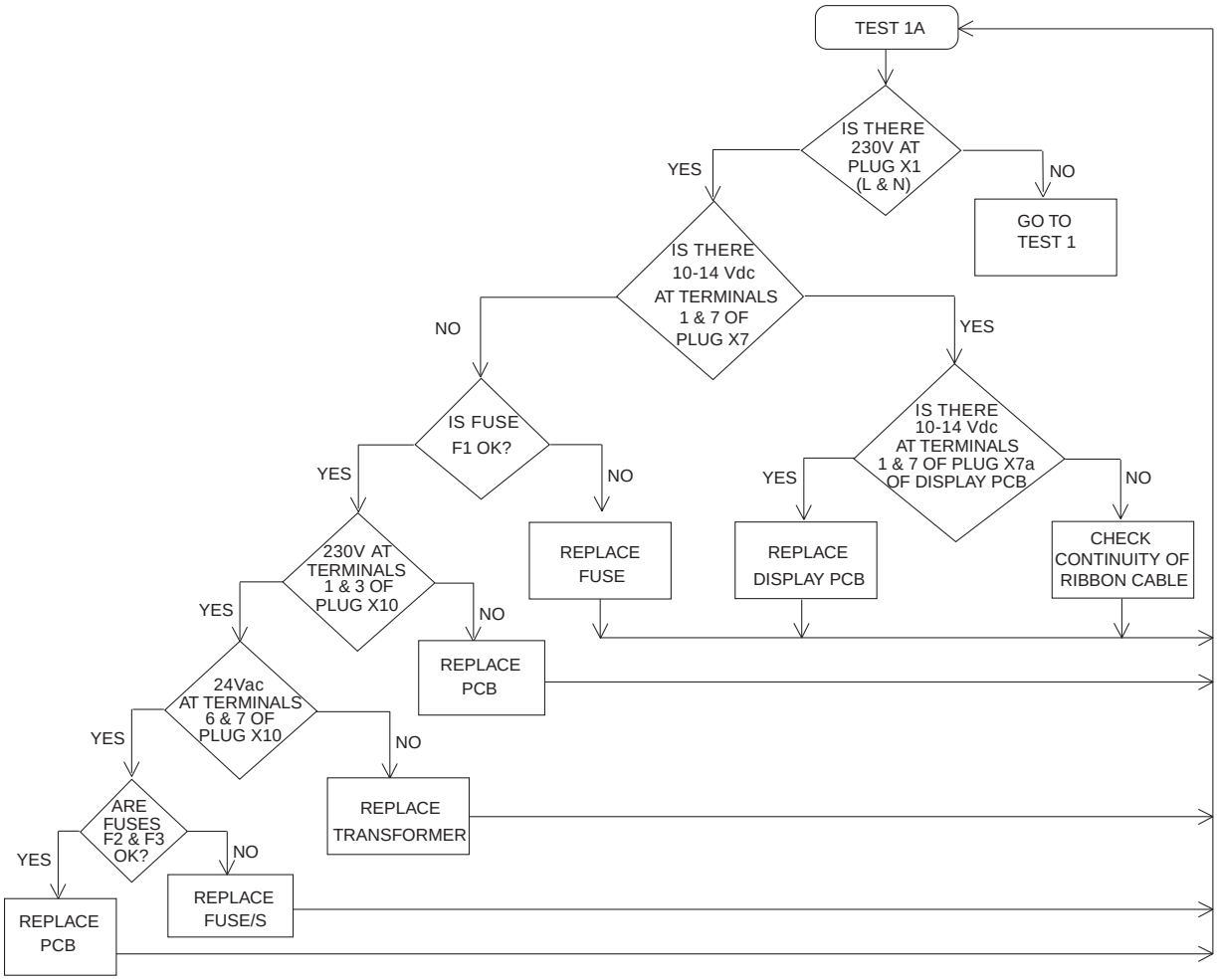

7.12.5 FAULT FINDING TEST '2'

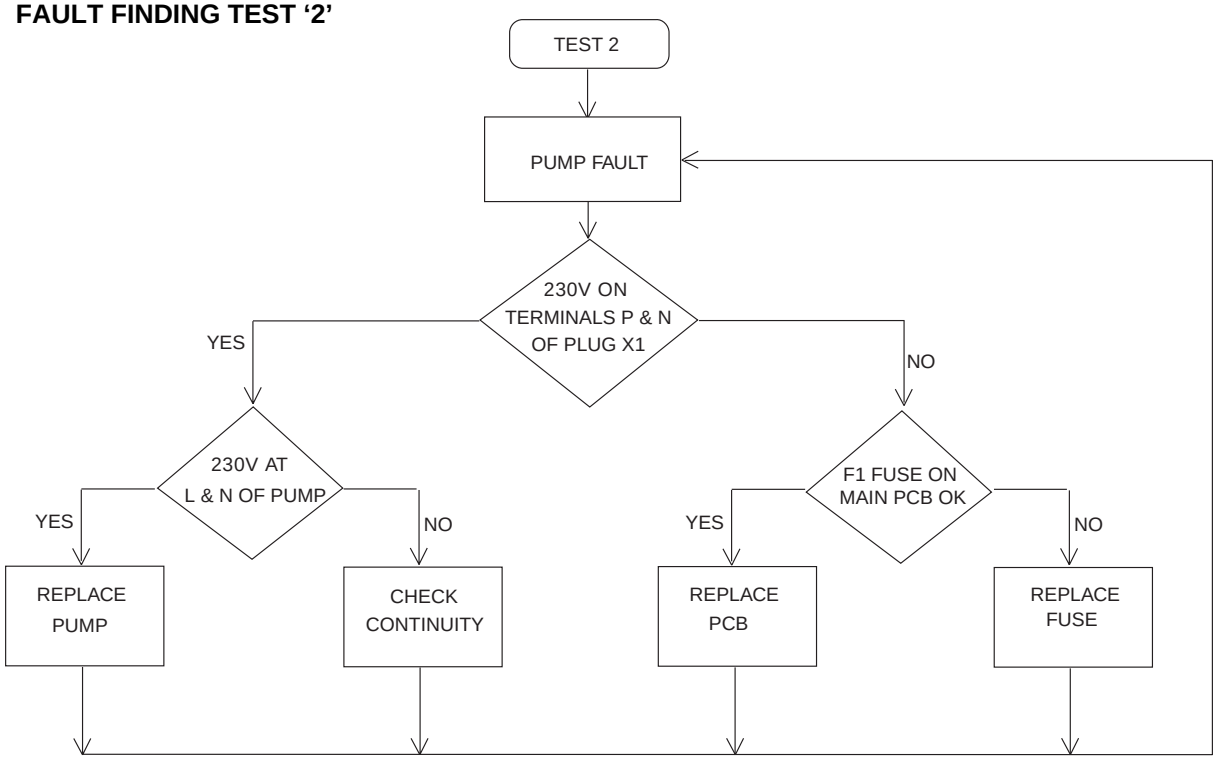

7.12.6 FAULT FINDING TEST '3'

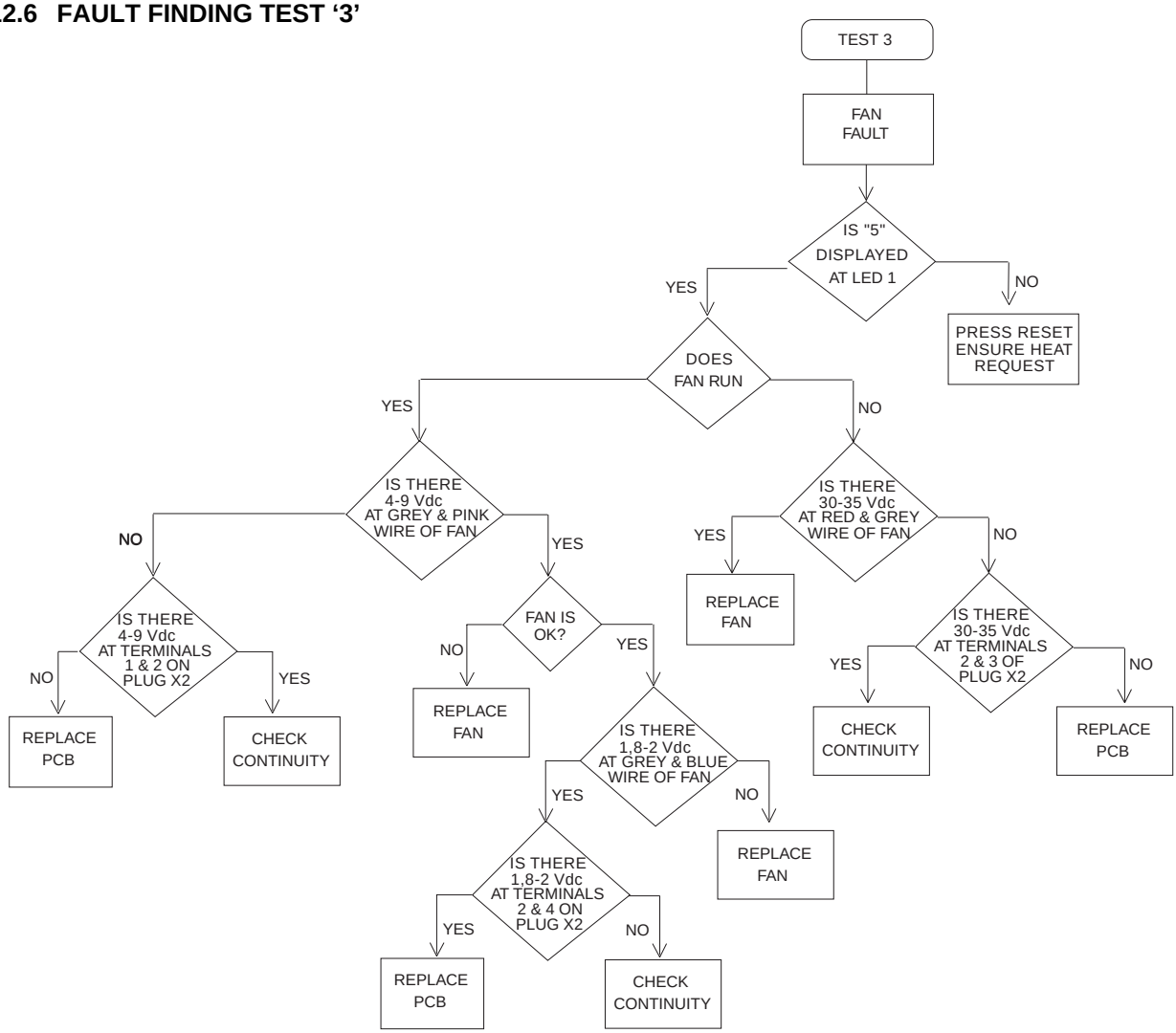

7.12.7 FAULT FINDING TEST '4'

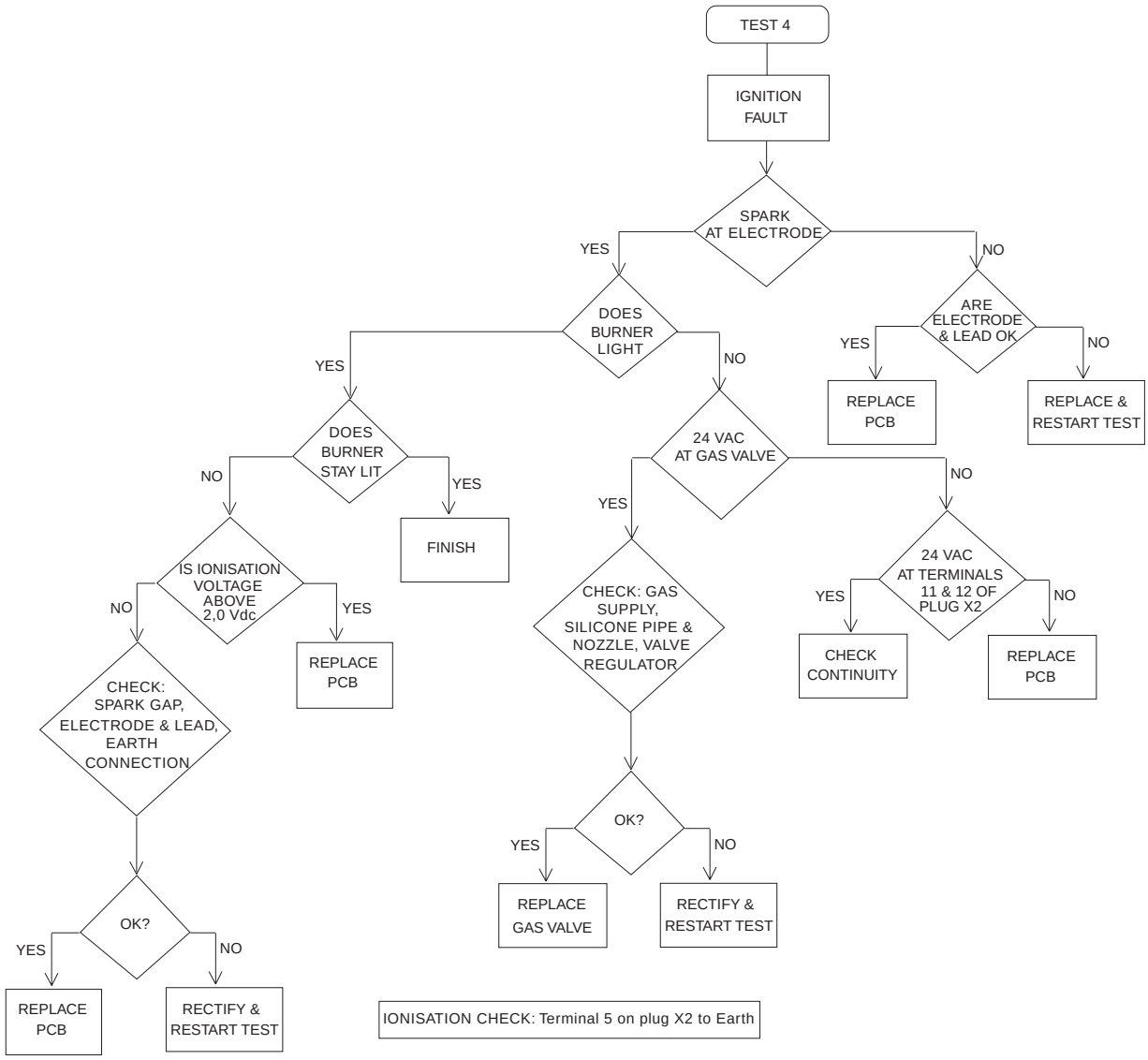

SECTION 8 WIRING DIAGRAMS

8.1 IMPORTANT

The Eclipse boiler utilises 24V switching. Any external controls that are directly connected to the boiler must be suitable for 24V applications and shall be voltage free. <u>Under no circumstances should a 230V supply be connected to terminals 4 & 6 of the appliance terminal strip.</u>

8.2 INSTALLATION OF VOKERA TIMECLOCK (part no. 201 or 202)

- Isolate the appliance from the electrical supply and remove the casing as described in 4.8.1.
- Gain access to the appliance terminal strip as detailed in 4.8.2.
- Remove the square blanking plate from the clock aperture of the control panel.
- Insert the clock bezel (supplied with boiler) into the aperture and secure in place with the 2 locking tabs.
- Connect the wires to the clock as shown in fig. 34.
- Mount the clock to the clock bezel using the screws provided.
- Remove the factory fitted link between terminals 4 & 6 of the appliance terminal strip.
- Connect the clock wires to the appliance terminal strip as shown in fig. 34.
- Replace the input board cover and appliance casing once the clock installation has been completed.

8.3 EXTERNAL CONTROLS IMPORTANT (see 8.1)

Vokera recommend the use of the "S" plan system of controls (see fig. 34B). However the "Y" plan system of controls can be adapted for use with the Eclipse by means of a relay (see fig.34A).

NOTE

Guidance on the recommended practice for the installation of external controls, can be found in CHeSS – HC1/HC2 (www.energy-efficiency.gov.uk).

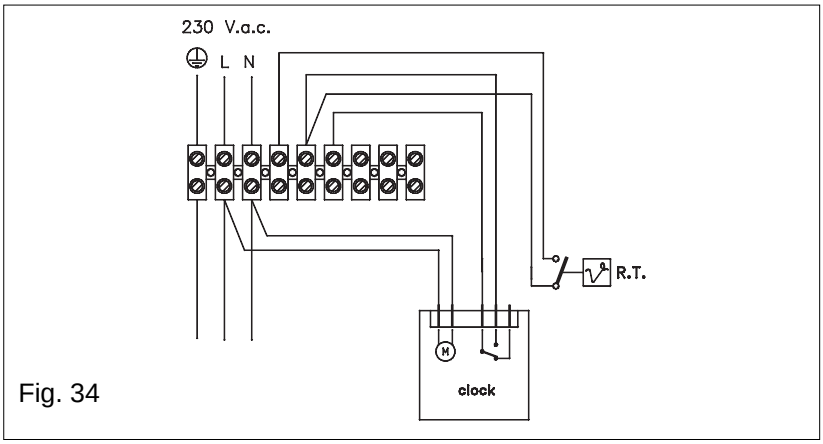

Fig. 34

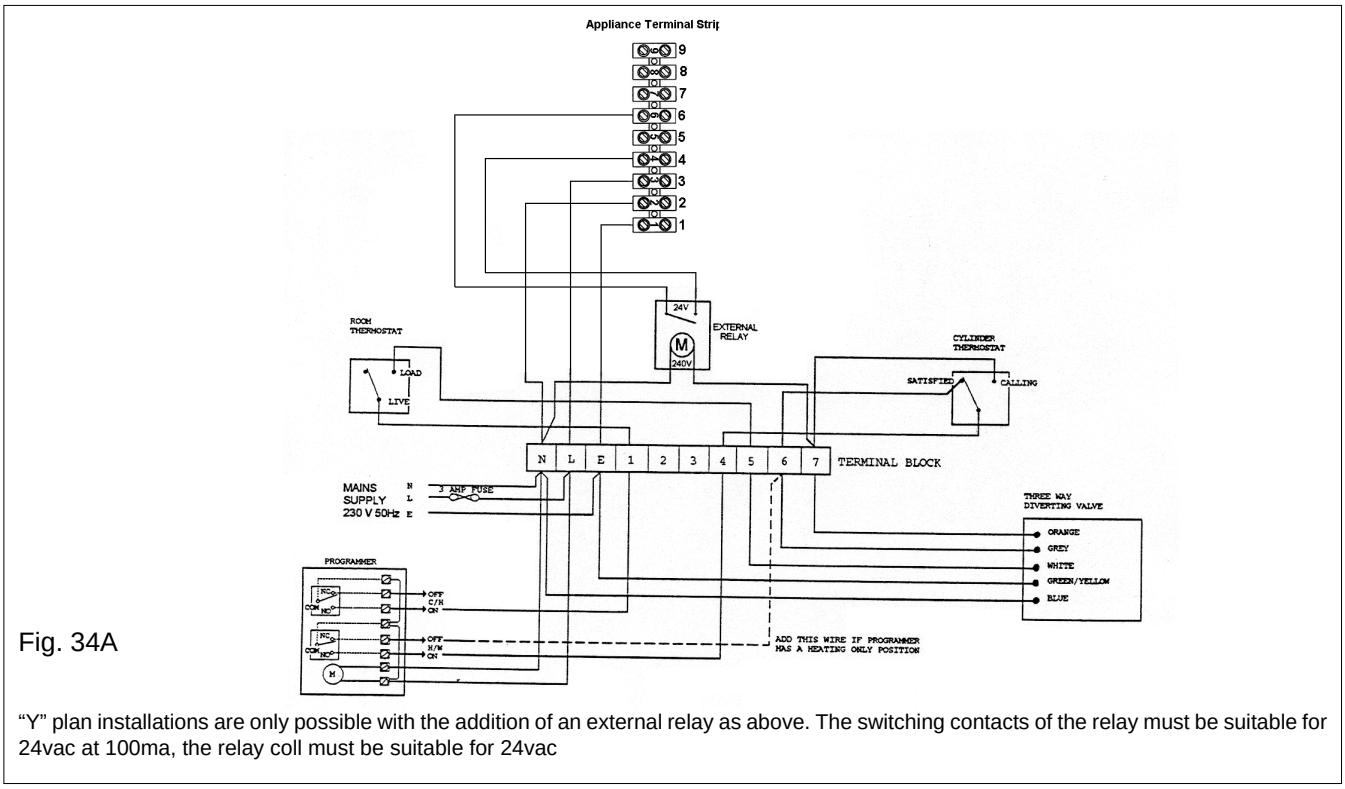

Fig. 34A

"Y" plan installations are only possible with the addition of an external relay as above. The switching contacts of the relay must be suitable for 24vac at 100ma, the relay coll must be suitable for 24vac

"S" plan with external programmer

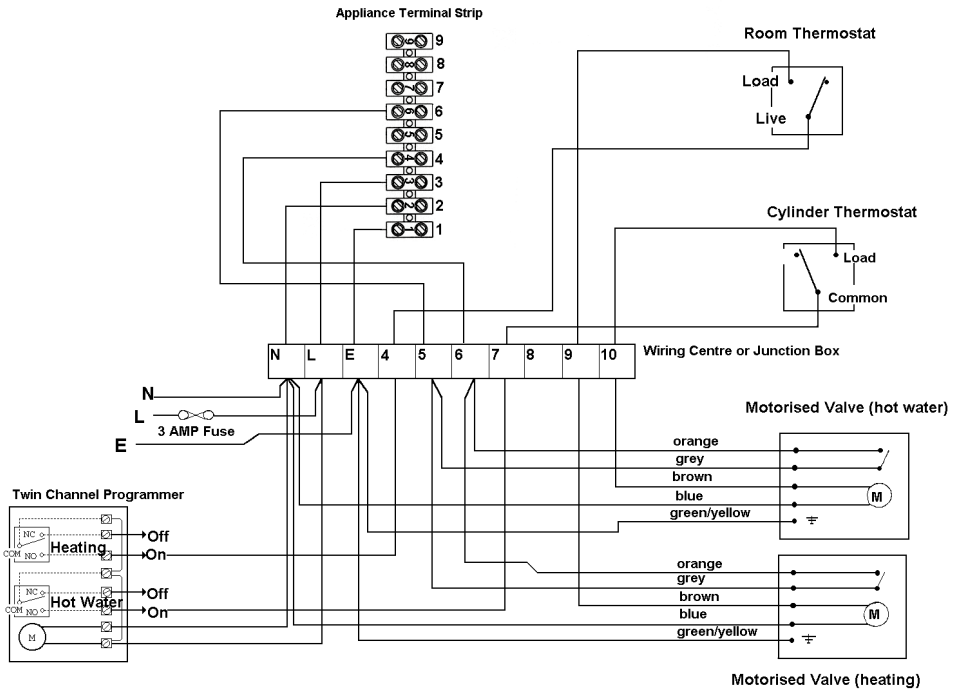

Fig. 34B

FUNCTIONAL DIAGRAM

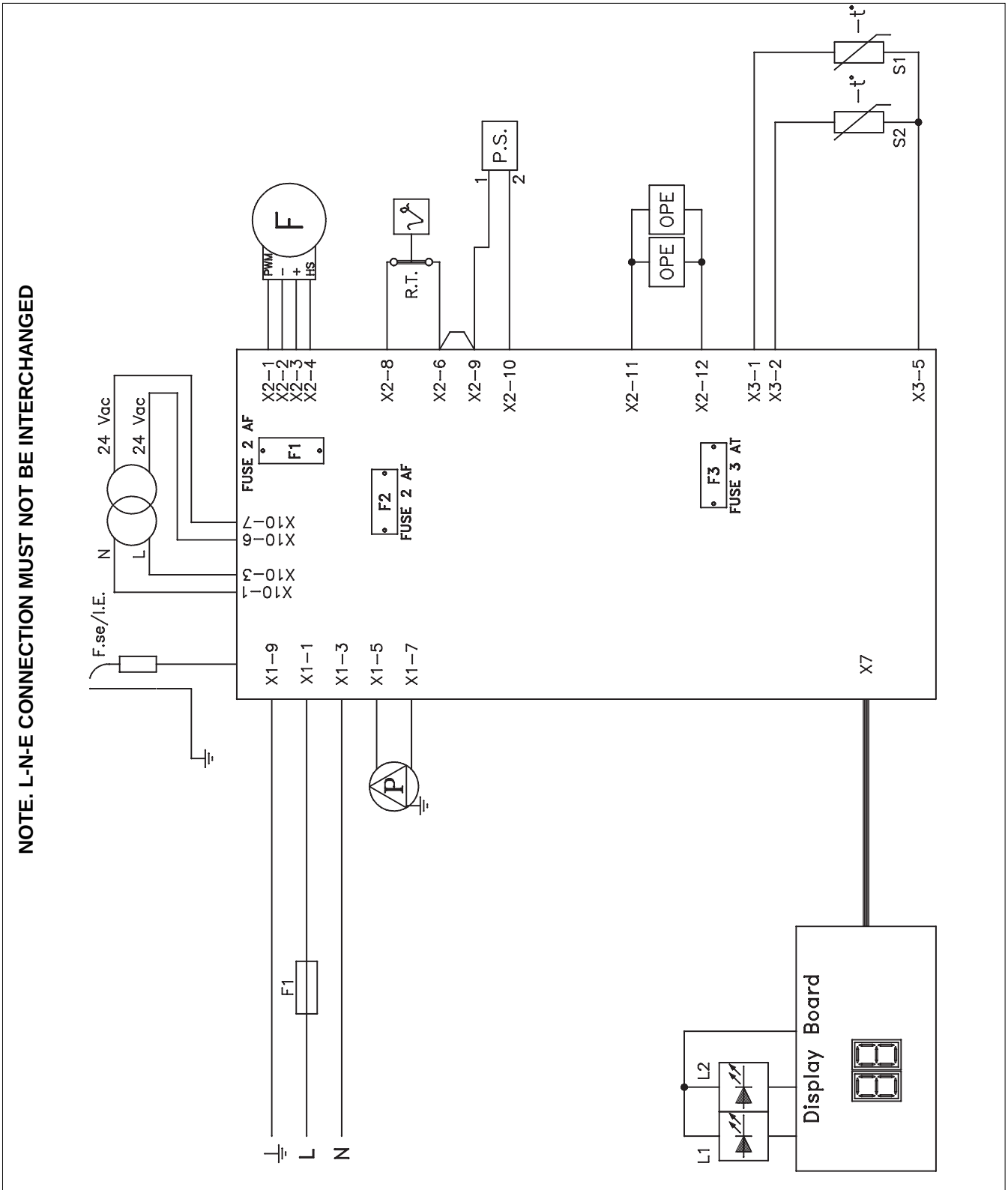

Fig. 35

Key

R.T.	Room thermostat	**L2**	Led alarm (blink red)
F	Fan	**F1**	Fusibile 2 AF
P	Pump	**F.se/I.E.**	Spark/sense electrode
S1	Flow thermistor (NTC)	**OPE**	Gas valve solenoids
S2	Return thermistor (NTC)	**RL3V**	3 way relay
L1	Led OK (green)	**P.S.**	Pressure switch (NC)

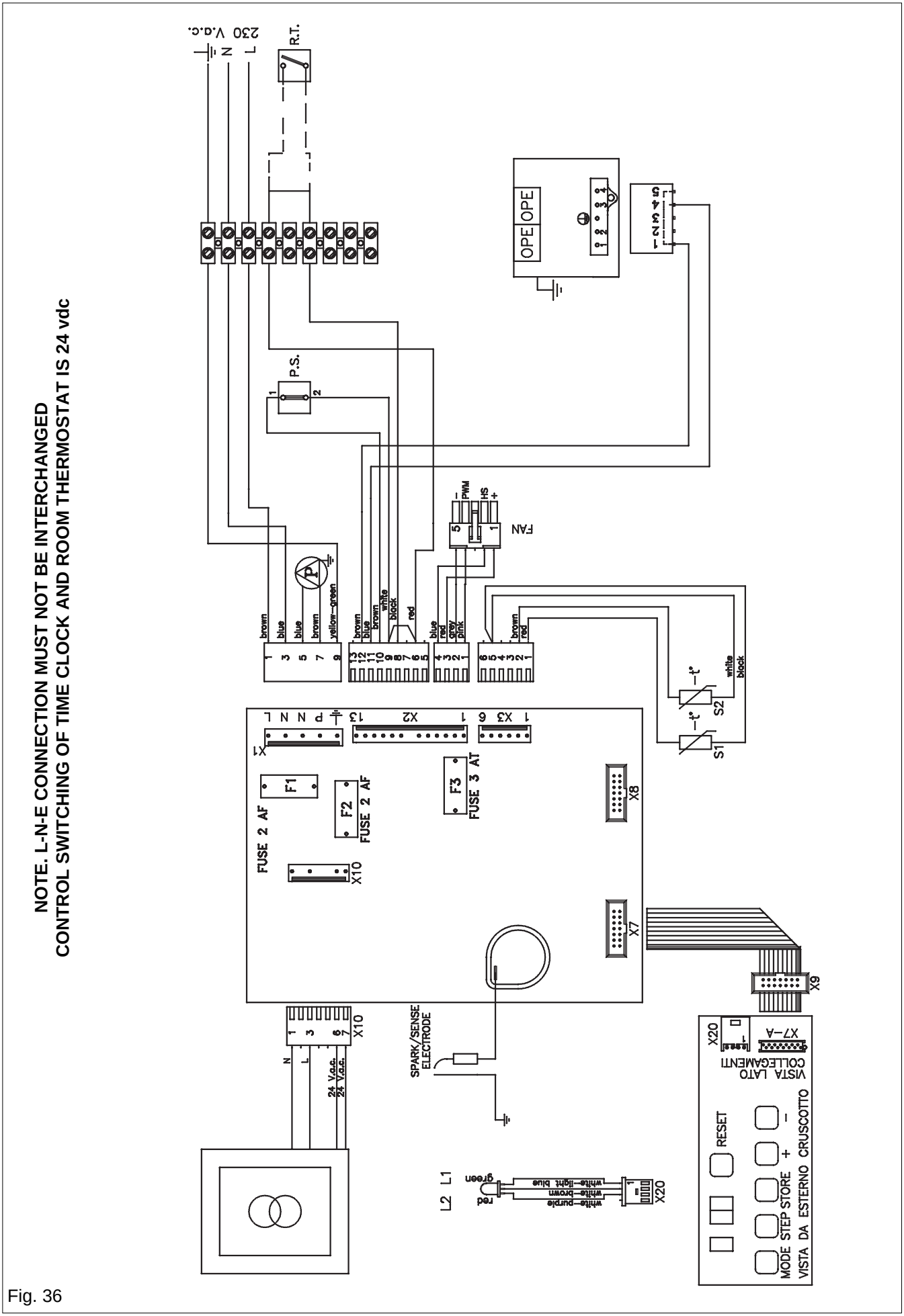
NOTE. L-N-E CONNECTION MUST NOT BE INTERCHANGED
CONTROL SWITCHING OF TIME CLOCK AND ROOM THERMOSTAT IS 24 vdc
230 V.a.c.
L
N
R.T.
OPE
OPE
OPE
P.S.
FAN
PWM
HS
brown
blue
blue
brown
yellow-green
white
black
red
grey
pink
S1
S2
white
black
X1
X2
X3
FUSE 2 AF
F1
F2
FUSE 2 AF
F3
FUSE 3 AT
X8
X7
X10
X9
SPARK/SENSE
ELECTRODE
24 Vac.
24 Vac.
L2 L1
green
red
white-purple
white-brown
white-light blue
X20
X7-A
VISTA LATO
COLLEGAMENTI
RESET
MODE
STEP
STORE
VISTA DA ESTERNO
CRUSCOTTO

Fig. 36

LOCATION	TERMINAL	DESIGNATION
Appliance terminal strip	1	Earth connection
Appliance terminal strip	2	Live connection
Appliance terminal strip	3	Neutral connection
Appliance terminal strip	4	24V connection
Appliance terminal strip	5	Spare
Appliance terminal strip	6	24V connection
Appliance terminal strip	7	Spare
Appliance terminal strip	8	Spare
Appliance terminal strip	9	Spare

PCB	PLUG or CONNECTION	DESIGNATION
Main PCB	X1	Incoming 230V supply & pump connection
Main PCB	X2	Fan connection, condense pressure switch connection, gas valve connection
Main PCB	X3	Sensor connections
Main PCB	X7	Display board connection
Main PCB	X8	Unused
Main PCB	X10	External transformer connection
Main PCB	F1	2AF fuse
Main PCB	F2	2AF fuse
Main PCB	F3	4AT fuse

PCB	PLUG or CONNECTION	DESIGNATION
display PCB	X7A	Connection from main PCB
display PCB	X9	Unused
display PCB	X20	Status LED connection

INTERNAL COMPONENT	SYMBOL	DESIGNATION
Gas valve	OPE	Plug X2 on main PCB
Fan	F	Plug X2 on main PCB
Condense pressure switch	P.S.	Plug X2 on main PCB
Flow sensor	S1	Plug X3 on main PCB
Return sensor	S2	Plug X3 on main PCB
Pump	P	Plug X1 on main PCB
External transformer		Plug X10 on main PCB
24V connection for time clock or room thermostat	R.T.	Appliance terminal strip (terminals&)
Status LED	L1 L2	Plug X20 on display PCB

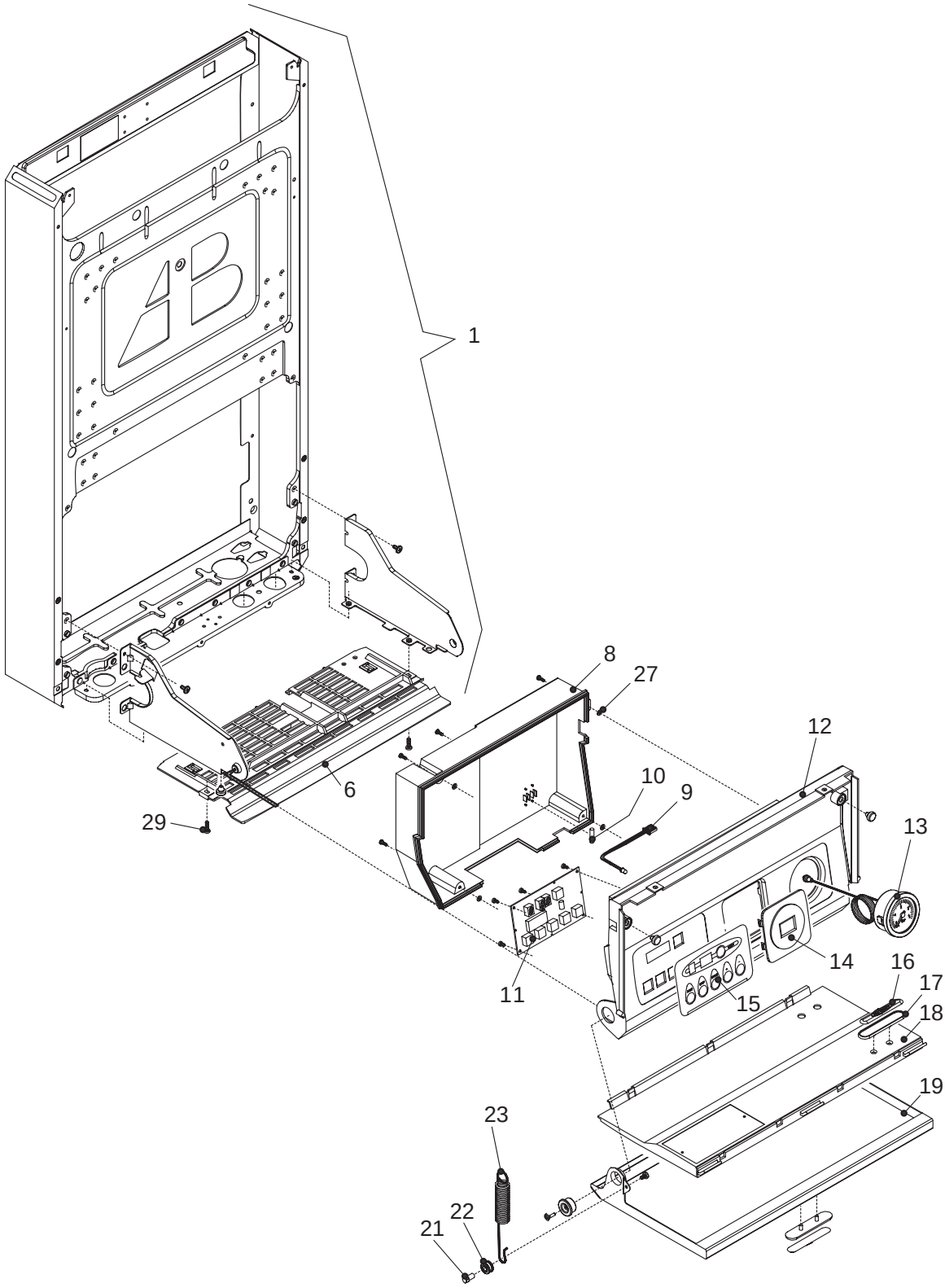

Pos	Description	Part N. 216 ESS	Part N. 226ESS
1	FRAME ASSEMBLY	8344	8344
6	GUARD	9814	9814
9	GREEN-RED LED	8921	8921
10	2A INLINE FUSE (5 pcs.)	8968	8968
11	DISPLAY BOARD	8918	8918
12	INSTRUMENTAL PANEL	8346	8346
13	QUICK PRIMER PRESSURE GAUGE	8968	8968
14	HOLE COVER	9709	9709
15	ADHESIVE FILM FOR INSTRUMENTAL PANEL	8349	8349
16	PLASTIC TRADE MARK LABEL	1748	1748
17	PLASTIC TRADE MARK LABEL BRACKET	2138	2138
18	DOOR PANEL	6168	6168
19	DOOR PANEL	5254	5254
20	FLANGE	5304	5304
21	MOUNTING SPINDLE	5301	5301
22	PIN	5303	5303
23	SPRING FOR PANEL	5275	5275
27	O-RING	9289	9289
29	SCREW (20 pcs.)	5080	5080

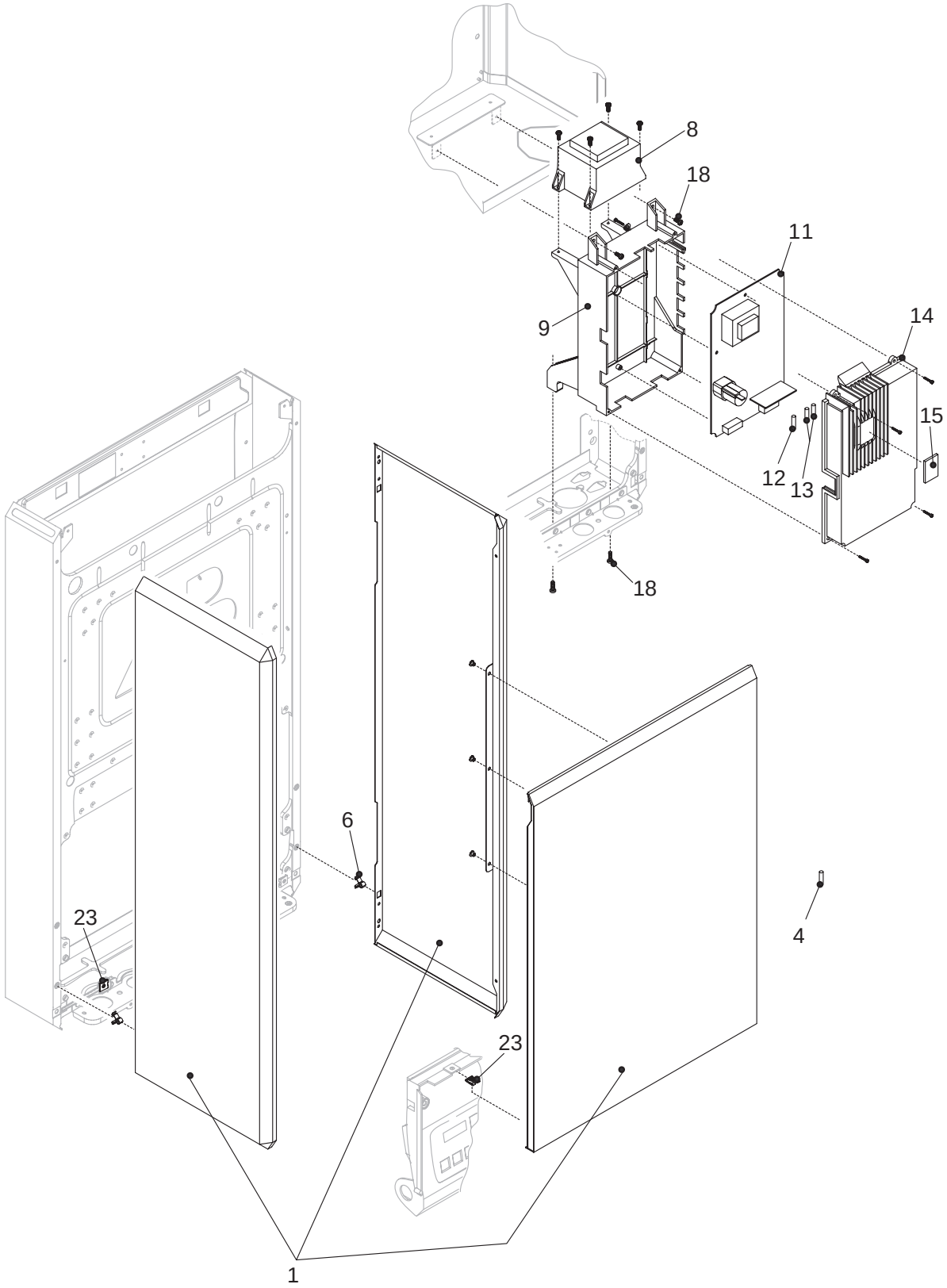

Pos	Description	Part N. 216 ESS	Part N. 226ESS
1	CASE	01005170	01005170
4	3A FUSE	3478	3478
6	CASE CLIP (10 pcs.)	5588	5588
8	WIRED TRANSFORMER	1048	1048
9	PRINTED CIRCUIT BACK SEMI-BOX	1037	1037
11	PRINTED CIRCUIT BOARD MTN SETTING	10022687	10022686
11	PRINTED CIRCUIT BOARD LPG SETTING	10022690	10022689
12	3,15A INLET FUSE	8969	8969
13	2A INLET FUSE (5 pcs.)	8968	8968
14	PRINTED CIRCUIT FRONT SEMI-BOX	8862	8862
15	BLACK VELCRO	1041	1041
18	SCREW (20 pcs.)	5080	5080
23	EDGE CLIP (20 pcs.)	5128	5128

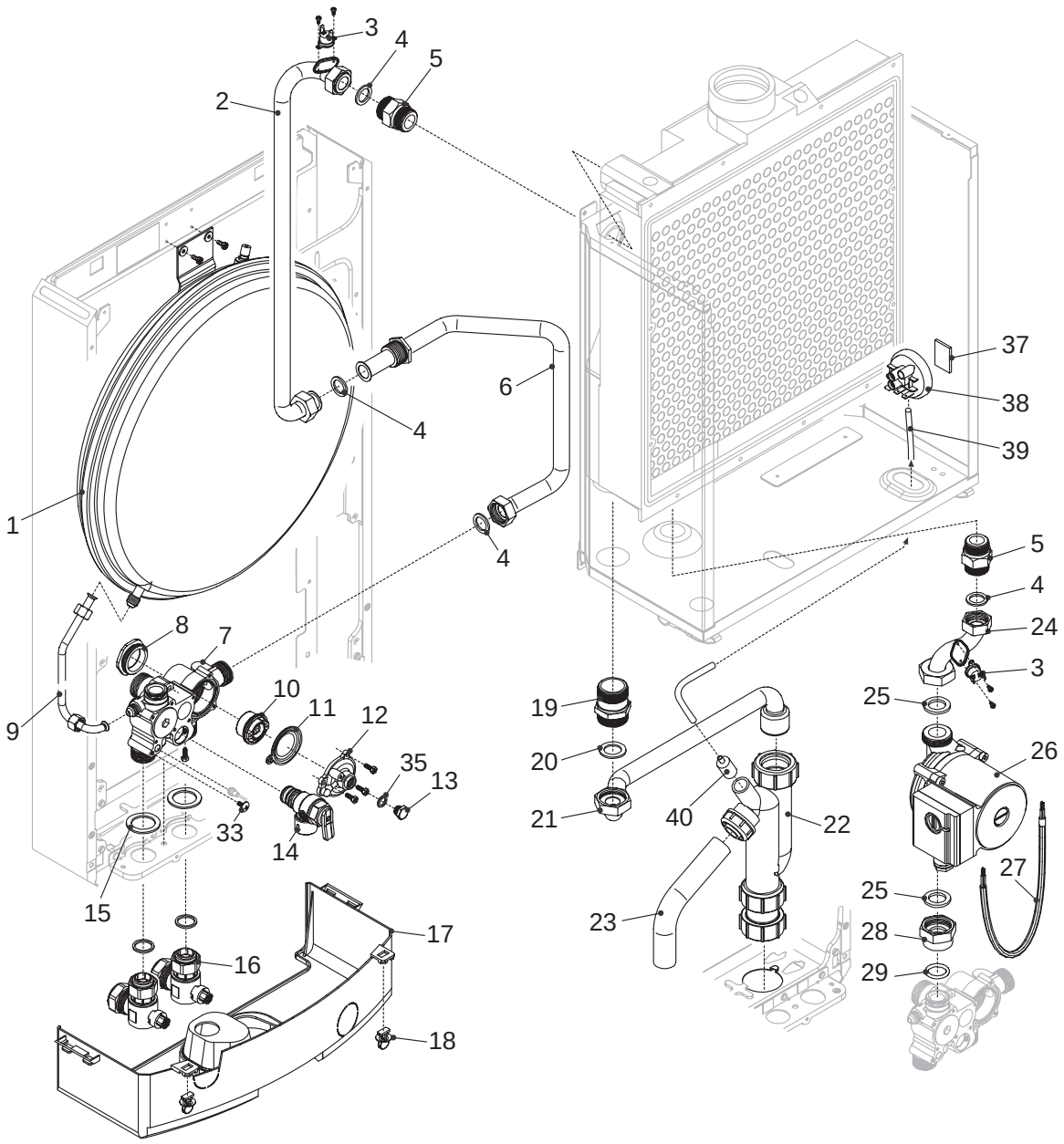

Pos	Description	Part N. 216 ESS	Part N. 226ESS
1	EXPANSION VESSEL	7204	7204
2	PIPE	1011	1011
3	NTC SENSOR	1194	1194
4	WASHER (10 pcs.)	5023	5023
5	CONNECTION 3/4”	8873	8873
6	PIPE	10022445	10022445
7	HEATING MANIFOLD	10020799	10020799
8	HEATING BY-PASS BACK PLUG	2911	2911
9	EXPANSION VESSEL PIPE	7207	7207
10	HEATING BY-PASS VALVE	1734	1734
11	RUBBER DIAPHRAGM	6872	6872
12	FLOW MANIFOLD FRONT PLATE	6853	6853
13	BRASS CAP	8866	8866
14	SAFETY VALVE	1806	1806
15	WASHER (10 pcs.)	5203	5203
16	HEATING WATER COCK	7100	7100
17	CONNECTIONS COVER	7216	7216
18	FIXING KNOB	7172	7172
19	CONNECTION	9730	9730
20	WASHER (10 pcs.)	9732	9732
21	PIPE	9731	9731
22	SIPHON	1191	1191
23	SIPHON PIPE	1192	1192
24	PUMP PIPE	8868	8868
25	RUBBER RING (10 pcs.)	6897	6897
26	PUMP	8876	8876
27	WIRING HARNESS	1045	1045
28	BRASS NUT	10022444	10022444
29	O-RING (10 pcs.)	6898	6898
33	SCREW	6898	6898
35	WASHER (10 pcs.)	5041	5041
37	BLACK VELCRO	1041	1041
38	PRESSURE SWITCH	10022556	10022556
39	SILICONE TUBE	1457	1457
40	CONNECTION	10022570	10022570

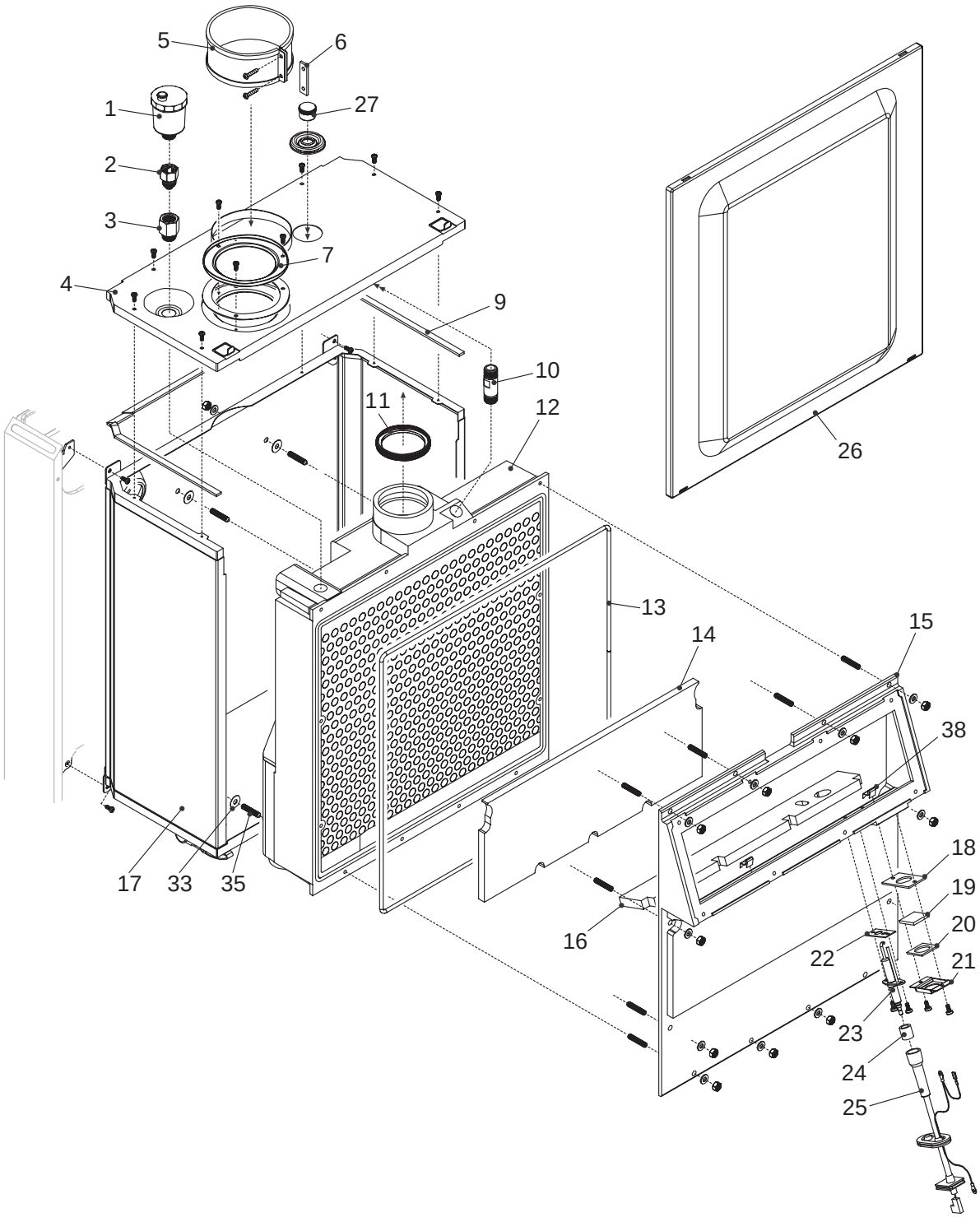

Pos	Description	Part N. 216 ESS	Part N. 226ESS
1	AIR VENT BOTTLE	9849	9849
2	NON RETURN VALVE	8910	8910
3	CONNECTION FOR NON RETURN VALVE	8911	8911
4	UPPER PANEL FOR AIR BOX	8881	8881
5	CLAMP	8675	8675
6	WASHER CLAMP (10 pcs.)	5920	5920
7	AIR BOX HOLE CAP	8084	8084
9	WASHER (10 pcs.)	5905	5905
10	CONNECTION	8908	8908
11	WASHER	8912	8912
12	HEAT EXCHANGER	8884	8884
13	WASHER	9287	9287
14	EXCHANGER LOWER INSULATING PANEL	1193	1193
15	COVER FOR HEAT EXCHANGER	1033	1033
16	EXCHANGER UPPER INSULATING PANEL	1016	1016
17	ROOMSEALED CHAMBER	10022672	10022672
18	WASHER	8903	8903
19	GLASS	8900	8900
20	WASHER	8902	8902
21	GLASS SUPPORT COVER	8901	8901
22	WASHER	8896	8896
23	SPARK-SENSING ELECTRODE	9288	9288
24	GASKET	8904	8904
25	SPARK ELECTRODE CABLE	1044	1044
26	FRONT PANEL FOR AIR BOX	1035	1035
27	PLUG	8909	8909
33	WASHER	1033	1033
35	SCREW	5216	5216
38	CLIPS (10 pcs.)	10021115	10021115

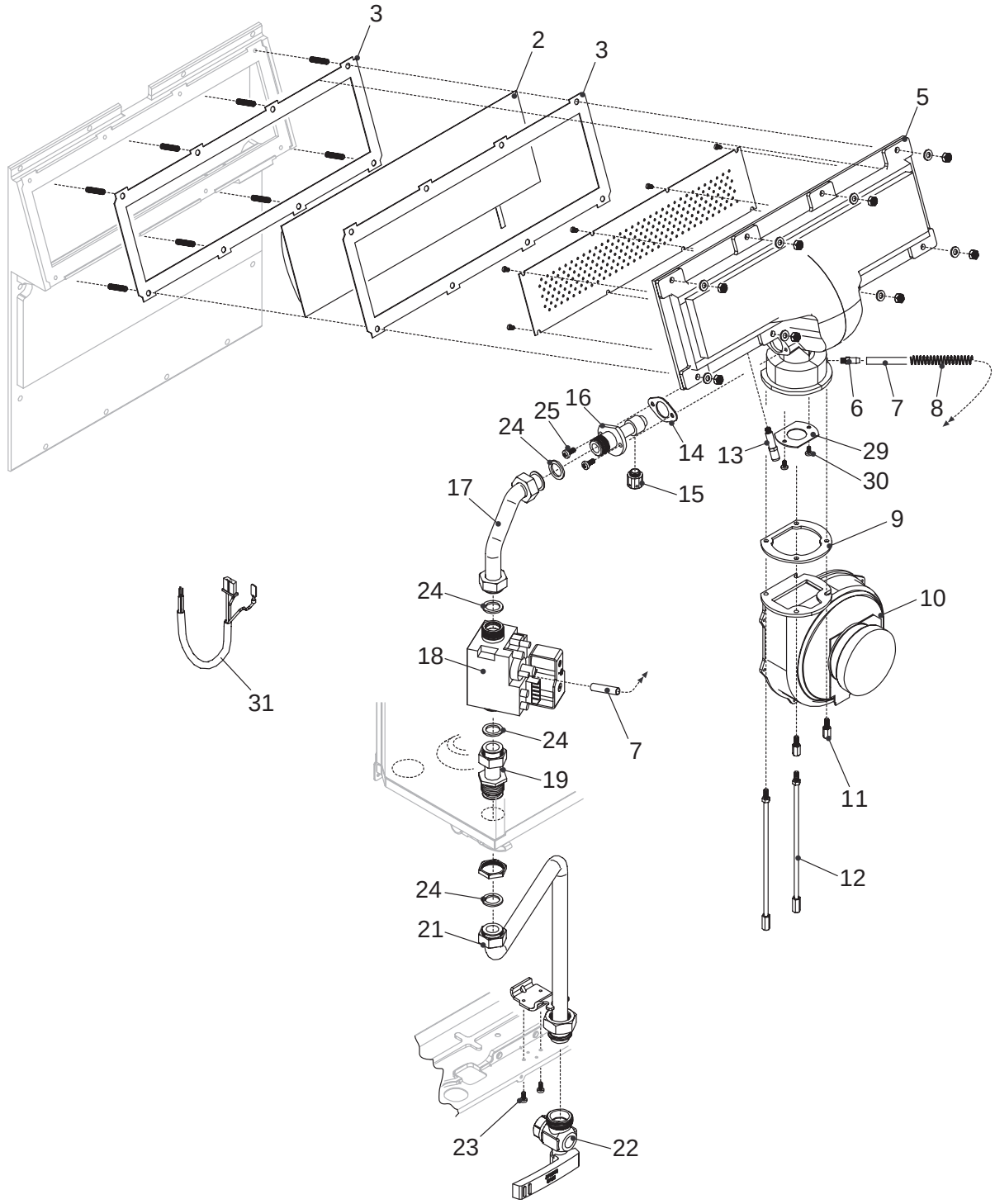

Pos	Description	Part N. 216 ESS	Part N. 226ESS
2	MAIN BURNER	1196	1196
3	WASHER	9285	9285
5	AIR CONVEYOR	10022450	8886
6	PRESSURE CONNECTION	8916	8916
7	SILICONE TUBE	1457	1457
8	SPRING	9296	9296
9	FAN GASKET (5 pcs.)	8893	8893
10	FAN	1018	1018
11	SCREW	1006	1006
12	SCREW	9292	9292
13	PRESSURE CONNECTION	8915	8915
14	WASHER	9299	9299
15	MAIN BURNER JET (MTN)	8897	8897
16	MAIN BURNER JET (LPG)	10022453	9295
17	GAS PIPE	10022442	10022442
18	GAS VALVE	10022441	10022441
19	GAS PIPE	10022443	10022443
21	PIPE	9772	9772
22	GAS COCK	7098	7098
23	SCREWS (20 pcs.)	5176	5176
24	WASHER (10 pcs.)	5023	5023
25	SCREW	1006	1006
29	GAS DIAPHRAGM	10022451	
30	SCREWS (10 pcs.)	10021080	
31	WIRING HARNESS	10022333	10022333

SECTION 10 L.P.G. INSTRUCTIONS

For details of converting boilers to LPG please refer to the instructions supplied with the relevant conversion kit.

10.1 TECHNICAL DATA

	216	226
Inlet pressure	37 mbar	37 mbar
Maximum gas rate	2,49 l/per hr.	4,08 l/per hr.
Minimum gas rate	0,72 l/per hr.	1,19 l/per hr.
Injector size	Single injector with six 1.6mm holes	Single injector with six 2.3mm holes
CO_2 level (cover off)	9,80%	9,80%
Maximum fan speed (RPM)	4.100	5.500
Minimum fan speed (RPM)	1.400	1.700
Soft-light	3.850	3.025
Maximum NOx emission	40 ppm	30 ppm
Minimum NOx emission	20 ppm	20 ppm
Maximum CO emission	50 ppm	50 ppm
Minimum CO emission	50 ppm	20 ppm
Maximum CO_2 emission	10% (cover on)	10% (cover on)
Minimum CO_2 emission	10% (cover on)	10% (cover on)
CO/CO_2 ratio	0,0005 to 1	0,0005 to 1

10.2 RELATED DOCUMENTS

BS 6798		**INSTALLATION OF BOILERS OF RATED INPUT NOT EXCEEDING 60 kW**
BS 5449	**PART 1**	**FORCED CIRCULATION HOT WATER SYSTEMS**
BS 5546		**INSTALLATION OF GAS HOT WATER SUPPLIES FOR DOMESTIC PURPOSES**
BS 5440	**PART 1**	**FLUES**
BS 5482	**PART 1**	**DOMESTIC BUTANE & PROPANE GAS BURNERS IN PERMAMENT DWELLINGS**

10.3 GAS SUPPLY

The gas supply must be connected to the appliance by a competent LPG installer and must be of sufficient size to supply the appliance at its maximum output.

An existing supply must be checked to ensure that it is of adequate size to deal with the maximum rated input of this and any other appliances that it serves.

10.4 GAS SUPPLY INSTALLATION

The entire installation, including the meter, must be purged and checked for gas soundness.

10.5 ADJUSTING THE GAS VALVE

THE GAS VALVE MUST BE SET-UP OR ADJUSTED WITH THE AID OF A PROPERLY CALIBRATED FLUE GAS ANALYSER.

Remove the appliance casing as detailed in 4.8.1. Unclip and remove the air chamber cover. Set the flue gas analyser to read CO_2 and insert the probe into the flue analysis test point (see fig. 1). Using the procedure as detailed in 7.3 & 7.3.5 respectively, enter the appliance engineer mode and set the fan speed to minimum.

10.5.1 MINIMUM SETTING

With the boiler operating at minimum output the CO_2 reading should be 9.8% (+/- 0.2%). If the CO_2 reading is correct, proceed to 10.5.2. If the CO_2 reading is incorrect, the minimum gas pressure must be adjusted as follows:

- using a suitable screwdriver, very slowly turn the minimum adjustment screw (see fig. 33) – clockwise to increase, counter clockwise to decrease – until the correct value is displayed on the CO_2 analyser (allow time for the analyser to stabilise);
- using the procedure detailed in 7.3.4, change the fan speed momentarily from minimum to maximum, then back to minimum;
- check that the correct value is still being obtained. If not, repeat the above procedure.

10.5.2 MAXIMUM SETTING

The maximum setting must only be checked and/or adjusted after the correct minimum setting has been verified. Using the procedure detailed in 7.3.4, change the fan speed from minimum to maximum.

With the boiler operating at maximum output the CO_2 reading should be 9.8% (+/- 0.2%). If the CO_2 reading is correct, press the RESET button to exit the appliance engineer mode. If the CO_2 reading is incorrect, the maximum gas pressure must be adjusted as follows:

- using a suitable screwdriver, very slowly turn the maximum adjustment screw (see fig. 33) – clockwise to increase, counter clockwise to decrease – until the correct value is displayed on the CO_2 analyser (allow time for the analyser to stabilise);
- using the procedure detailed in 7.3.4, change the fan speed momentarily from maximum to minimum, then back to maximum;

- check that the correct value is still being obtained. If not, repeat the above procedure;
- press the RESET button to exit the appliance engineer mode.

Remove the analyser test probe from the analysis test point and refit cap. Refit the air chamber cover. Refit appliance casing.

NOTE

You should ensure that all radiators or heat emitters are fully open during the above procedures. This will ensure that the fan speed (output) of the boiler is not compromised due to a high flow temperature.

10.6 RANGE RATING

The output of the boiler is automatically adjusted by a continuous air/gas modulation system. The system is controlled by the NTC thermistors (flow & return temperature sensors) which ensures stability of temperature irrespective of load conditions. However the appliance also has a range rating facility which can be used to limit the maximum output - to central heating- if required. Please refer to 7.3.1 & fig. 37 for more details.

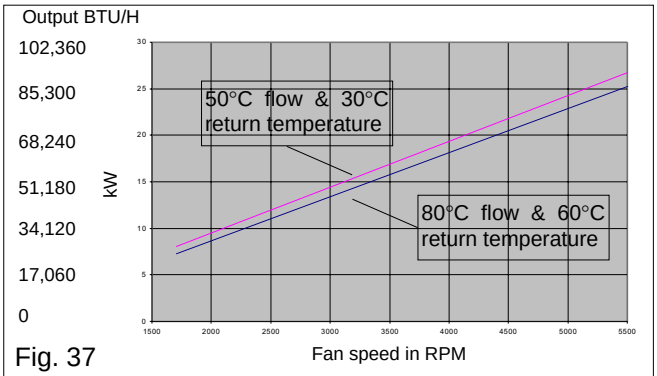

Fig. 37

Cod. 10022447 - Ed. 2 - 16/02

Vokèra

energizing home heating

Vokèra Ltd.
4th Floor, Catherine House, Boundary Way, Hemel Hempstead, Herts, HP2 7RP

Email: enquiries@vokera.co.uk Web: www.vokera.co.uk
General Enquiries - Tel: 01442 281400 Fax: 01442 281460
Technical Advice - Tel: 0141 945 6810
Spare Parts - Tel: 0141 945 6820
After Sales Service - Tel: 0870 333 0220

Vokèra Ireland
West Court, Callan, Co Kilkenny
Tel: 056 55057 Fax: 056 55060

Vokèra Ltd. reserve the right to change the specifications without prior notice. Consumers' statutory rights are not affected.

A Riello Group Company

benchmark™ COLLECTIVE MARK

"Vokèra"
supports Benchmark