spares & parts online
IBASIS.co.uk©

Vokèra
heating for life

Linea Max HE

Floor standing high efficiency combi boiler

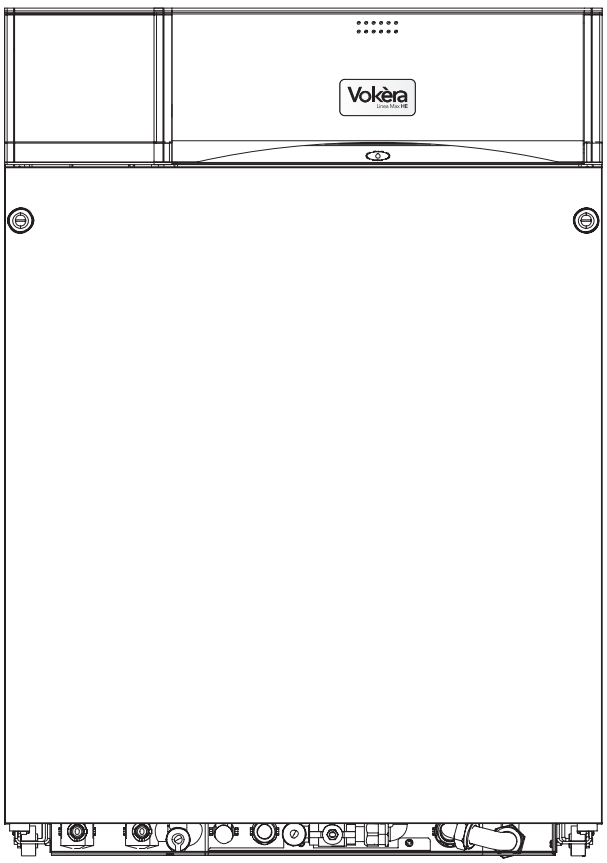

Installation & Servicing Instructions

CE

THESE INSTRUCTIONS TO BE RETAINED BY USER

benchmark
COLLECTIVE MARK
THE MARK OF QUALITY FOR THE INSTALLATION, COMMISSIONING AND SERVICING OF DOMESTIC HEATING AND HOT WATER SYSTEMS

Vokèra is a licensed member of the Benchmark scheme which aims to improve the standards of installation and commissioning of domestic hot water systems in the UK.

CONTENTS

Section	Subject	Page no
Section 1	**Introduction**	**1**
	General Layout	**1**
Section 2	**Design Principles & Operating Principles**	**2**
	Schematic Diagram	**2**
	Central Heating Mode	**2**
	Domestic Hot Water Mode	**2**
	Safety Devices	**2**
	Frost Thermostat	**2**
Section 3	**Technical Data**	**3**
Section 4	**General Requirements**	**5**
	Related Documents	**5**
	Location of Appliance	**5**
	Gas Supply	**5**
	Flue System	**5**
	Air Supply	**6**
	Water Circulation (C/H)	**6**
	Electrical Supply	**7**
	Showers	**7**
	Timber framed buildings	**7**
	Mounting on a combustible surface	**7**
	Inhibitors	**7**
Section 4A	**General Requirements (EIRE)**	**8**
	Related Documents	**8**
	Location of Appliance	**8**
	Installing the flue system	**8**
	Flue System	**8**
	Air Supply	**8**
	Water Circulation	**8**
	Electrical supply	**9**
	Showers	**9**
	Mounting on a Combustible Surface	**9**
	Timber Framed Buildings	**9**
	Inhibitors	**9**
	Declaration of Conformity	**9**
Section 5	**Installation**	**10**
	Delivery	**10**
	Unpacking	**11**
	Siting the Appliance	**14**
	Installing the flue system	**14**
	Fitting The Flue	**14**
	Electrical connections	**19**
Section 6	**Commissioning**	**21**
	Gas Supply Installation	**21**
	Central Heating Systems	**21**
	Checking Electricity Supply	**21**
	Pre-operation Check	**21**
	Lighting the Boiler	**21**
	Checking Burner Pressures	**22**
	Checking The Flue System	**23**
	Checking The Heating Thermistor	**23**
	Regulating The C/H System	**23**
	Final Flushing The C/H System	**23**
	Filling & Testing H/W System	**23**
	Final Checks For Operation	**23**
	Concluding Operations	**24**
Section 7	**Instructing The User**	**24**
Section 8	**Servicing Instructions**	**24**
	General	**24**
	Important Notes	**24**
	Recommended Routine Servicing	**24**
	To Gain General Access	**25**
	Room Sealed Chamber Front Cover	**26**
	Remove front combustion cover	**27**
	Remove the air chamber right side panel	**27**
	Electrode, Burner & Injectors	**27**
	Main Heat Exchanger	**28**
	Flue Fan	**28**
	Flue Pressure Differential Switch	**29**
	Combustion Chamber Insulation Panel	**29**
	Ignition Control Box	**29**
	Gas Control Valve	**29**
	Pump	**30**
	Automatic Air Release Valve	**30**
	Domestic Flow Switch	**30**
	Diverter Valve & Flow Switch Manifold	**31**
	Domestic H/W Heat Exchanger	**31**
	Checking/Replacing Main Expansion Vessel	**31**
	Diverter Valve	**32**
	Safety Valve	**33**
	Removal of Electrical Components	**33**
	Pressure Gauge	**34**
	Setting Gas Pressures	**35**
	Latent Heat Collector	**36**
	Cleaning the drain trap and the condensate drain	**37**
Section 9	**Operational Checks & Wiring**	**38**
	Sequence of Functions	**38**
	Diagnostic Error Codes	**41**
	Fault Finding Guides	**41**
Section 10	**Appendix**	**52**
	Internal Time Clock Installation	**52**
	Abling & Disabling Controls	**54**
	Generael Layout & Illustrated Wiring Diagram	**55**
	Preliminary Electrical System Checks	**56**
Section 11	**LPG Instructions**	**57**
	Gas Rates	**57**
	Burner Details	**57**
	Related documents	**57**
	Gas Supply	**57**
	Gas Supply installation	**57**
	Check Burner pressure	**57**
	Maximum Rate in C/H Mode	**57**
	Setting the Minimum Rate for C/H	**57**
Section 12	**Spare Parts**	**59**

The Vokèra Linea Max is a combined central heating and domestic hot water appliance. By design it incorporates full sequence electronic ignition, circulating pump, expansion vessel, safety valve, temperature gauge, pressure gauge, 3 port diverter valve and filling loop.

It is produced as a room sealed appliance suitable for floor mounting only. It is provided with a fan powered flue outlet with an annular co-axial combustion air intake, twin flue option is also available.

This appliance is designed for use with a sealed heating system only and is not intended for use on an open vented system.

An automatic range-rating facility is incorporated in the boiler for the central heating system in conjunction with the electronic burner modulation. The domestic hot water (dhw) service utilises a motorised valve combined with a 3 port diverter valve to give hot water priority which also benefits from a heatbank having a nominal capacity of 58 litres of circulating primary hot water positioned at the rear of the appliance.

Fig. 1

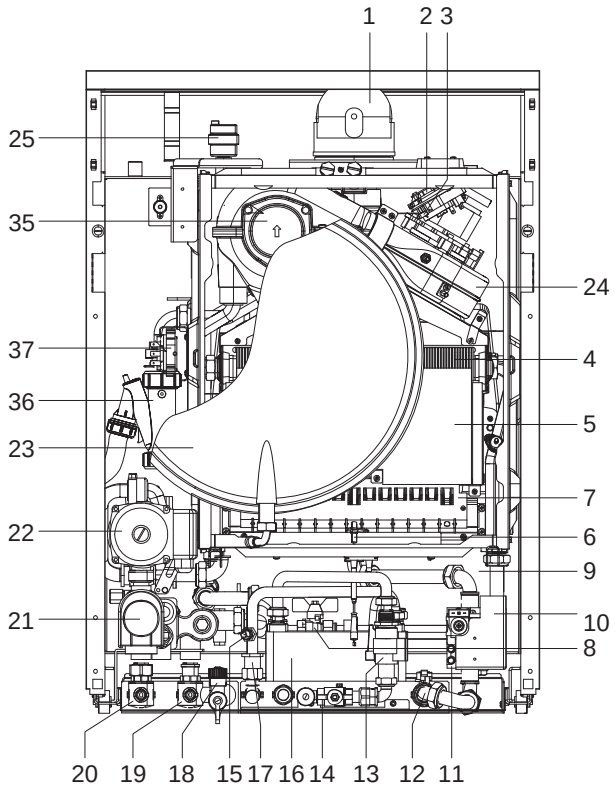

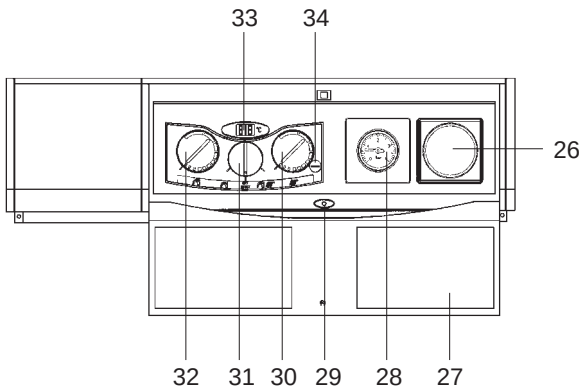

Fig.1 General Layout

1 Flue Elbow
2 Pressure Differential Switch
3 Silicone Pressure Tubes
4 Main Heat Exchanger
5 Combustion Chamber
6 Spark Electrode
7 Main Burner
8 Primary Store Isolation Valve (1 of 3)
9 Primary Store
10 Electronic Ignition Unit
11 Gas Valve
12 Gas Inlet
13 Domestic Flow Switch
14 Filling/Inlet Valve
15 Domestic NTC
16 Domestic Heat Exchanger
17 Hot Water Outlet
18 Points to fill valve
19 Central Heating Flow
20 Central Heating Return
21 Motorised Valve
22 Pump
23 Expansion Vessel
24 Fan
25 Automatic Air Vent
26 Timeclock Aperture (Optional)
27 Front Door Panel
28 Pressure Gauge
29 Status LED
30 Central Heating Temperature Control
31 Mode Selector Switch
32 Hot Water Temperature Control
33 Temperature Indicator
34 Combustion Switch
35 Latent heat collector
36 Condensate trap
37 Trap safety pressure switch

2.1 Fig.1 illustrates the general layout of components. Fig.2 illustrates the operating principles described below.

2.2 Central Heating Mode

2.2.1 When the various switches and controls impose a demand for heat, the pump is started. The flow of water from the pump operates a flow switch. This in turn energises the electronic circuitry. The fan is started, the gas valve is energised at an intermediate rate and the electronic ignition goes through an ignition attempt.

2.2.2 The burner ignition is checked by the electronic circuitry to ensure correct ignition of the burner. Once successful ignition has been achieved, the electronic circuitry increases the gas rate to 75% for a period of 15 minutes.

2.2.3 As water temperature increases this is sensed by the temperature sensor on the flow pipe which modulates the burner to match the heat output to the heat requirement of the system.

2.2.4 Depending on the load, either a) the water temperature will continue to rise and the burner will continue to modulate down until the maximum setting is reached at which point the burner is switched off, or b) the water temperature will fall and the burner will return to a higher output to match the demand.

When the request for heat has been satisfied the appliance pump and fan may continue to operate to dissipate any residual heat within the appliance.

2.3 Domestic Hot Water Mode

2.3.1 The appliances incorporate a hot water preheat facility. The appliance will therefore ignite periodically to maintain heat within the appliance.

2.3.2 The appliance will operate in domestic hot water mode whenever the mode selector switch is on regardless of mode selector switch position and any demand for central heating.

2.3.3 The diverter valve will automatically energise into the hot water position after central heating demand, or will stay in the hot water position after hot water demand. Opening a draw off tap will energise the pump and fan sending primary water to the domestic hot water heat exchanger.

2.3.4 Temperature control is transferred to the domestic hot water thermostat (potentiometer) which modulates the burner output between high and low flame to maintain an average heat input to suit the dhw output required.

2.3.5 An overrun is incorporated in the boiler in both c/h & dhw modes. The fan overruns until the boiler water cools to approximately 80°C (176°F).

2.4 Safety Devices

2.4.1 In both central heating and hot water modes safe operating is ensured by:

a. Differential pressure unit in the primary circuit which prevents burner operation if water flow rates are too low.

b. An electronic device that checks the primary pressure unit for activation. Failure results in deactivation of the pump, after approximately 10 minutes of operation.

c. A safety thermostat, which interrupts the control circuit shutting off the gas valve. At the same time the fan will still operate.

d. A Pressure differential switch in the flue system to check the fan's operation before allowing ignition.

e. A primary store safety thermostat with manual reset, wich interrupts the mains electricity supply

2.4.2 A safety valve is provided to relieve excess pressure from the primary circuit.

2..5 Frost Thermostat

The appliance has a built in frost protection circuit. Should the boiler temperature sensed at the primary thermistor fall below 5°C, the boiler will operate in central heating mode and continue to operate until the primary thermistor reaches approximately 40°C.

Fig. 2

This drawing is indicative only and does not accurately represent pipe positioning.

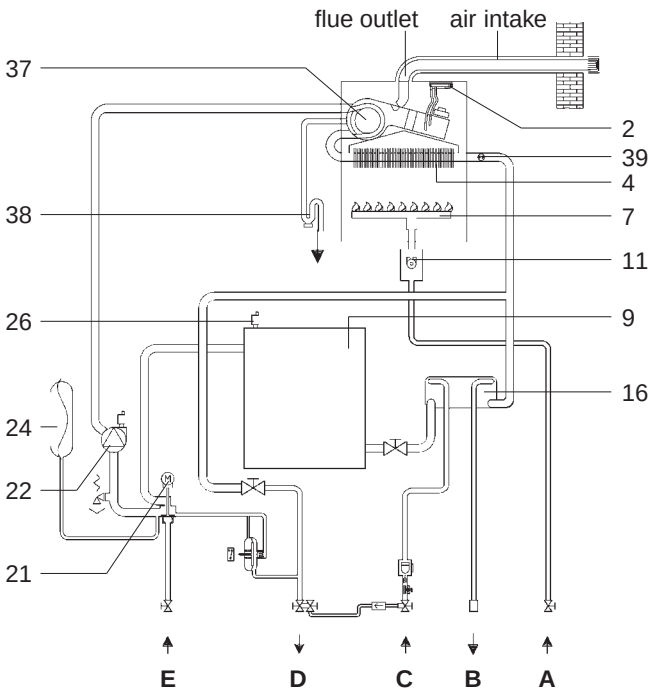

KEY:

A Gas
B Hot Water Outlet
C Cold Water Inlet
D Central Heating Flow
E Central Heating Return

SECTION 3 TECHNICAL DATA

3.1 Central heating	
Heat input (kW)	29.0
Maximum heat output@ 80/60 °C (kW)	28.1
Maximum heat output@ 50/30 °C (kW)	30.2
Minimum heat output@ 50/30 °C (kW)	14.8
Minimum working pressure	0.5 bar
Maximum working pressure	3.0 bar
3.2 Domestic hot water	
Heat input (kW)	29.0
Maximum heat output@ 80/60 °C (kW)	28.1
Flow rate (35 °C rise)	11.5 l/min
Maximum inlet pressure	6.0 bar
Minimum inlet working pressure	0.15 bar
3.3 Gas pressures	
Inlet pressure G20	20.0 mbar
Maximum burner pressure	9.20 mbar
Minimum burner pressure (central heating)	2.70 mbar
Minimum burner pressure (domestic hot water)	1.20 mbar
Gross rate (central heating, max - min)	3.07 - 1.59 m3/h
Injectors size	14 x 1.35 mm
3.4 Expansion vessel	
Capacity	10 litres
Pre-charge pressure	1.0 bar
3.5 Dimensions	
Height	850 mm
Width	600 mm
Depth	585 mm
Dry weight	88 kg
3.6 Clearances	
Sides	12 mm
Above casing	20 mm
Front	600 mm
3.7 Connections	
Flow & return	22 mm
Hot & cold water connections	15 mm
Gas	15 mm
Safety valve	15 mm
Condense	21 mm
3.8 Electrical	
Voltage	230V/~ 50hz
Power consumption	150 W
Internal fuse	2 A
3.9 Flue details (concentric)	
Maximum horizontal flue length (60/100mm)	4.0 m
Maximum vertical flue length (60/100mm)	5.0 m
Maximum vertical flue length (80/125mm)	10.0 m
3.10 Flue details (twin pipe)	
Maximum horizontal flue length (80mm + 80mm)	12 m + 12 m
Maximum vertical flue length (80mm + 80mm)	contact Vokera technical for advice
3.11 Efficiency	
SEDBUK	87.1 Band “B”

Ref. Condition 15 °C , 1013,25 mbar, dry gas. - NOTE: L.P.G. data refer to section 10.

3.11 Central Heating Pump Duty

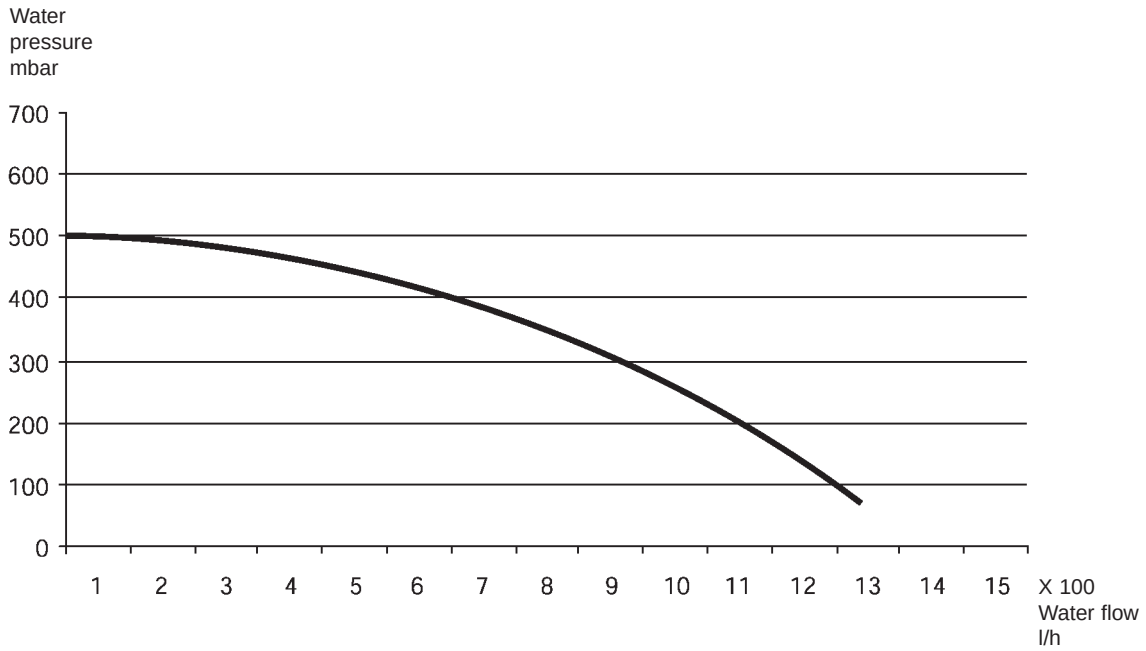

Fig. 3

4.0 General Requirements

This appliance must be installed by a competent person in accordance with the Gas Safety (Installation & Use) Regulations 1998.

4.1 Related Documents

The installation of this boiler must be in accordance with the relevant requirements of the Gas Safety (Installation & Use) Regulations 1998 the Local Building Regulations, the current I.E.E. Wiring Regulations, the by-laws of the local water undertaking, and in Scotland, in accordance with the Building Standards (Scotland) Regulation. In Ireland the local building regulations (IE).

It should be in accordance also with any relevant requirements of the local authority and the relevant recommendations of the following British Standard Codes of Practice:

BS 6891		1988	Low pressure installation pipes
BS 6798		1987	Boilers of rated input not exceeding 60kW.
BS 5449	Part 1	1990	Forced circulation hot water systems
BS 5546		1990	Installation of gas hot water supplies for domestic purposes (2nd family gases).
BS 5440	Part 1	1990	Flues.
BS 5440	Part 2	1989	Flues & Ventilation.
BS 7074	Part 1	1989	Application, selection & installation of expansion vessels & ancillary equipment for sealed water systems.

4.2 Location of Appliance

The combination boiler may be installed in any room or internal space, although particular attention is drawn to the requirements of the current I.E.E. Wiring Regulations, and in Scotland, the electrical provisions of the Building Regulations applicable in Scotland, with respect to the installation of the combination boiler in a room or internal space containing a bath or shower.

Where a room-sealed appliance is installed in a room containing a bath or shower, any electrical switch or appliance control, utilising mains electricity, should be located in such a position that it cannot be touched by a person using the bath or shower.

The location chosen for the boiler must permit the provision of a satisfactory flue and termination. The location must also permit an adequate air supply for combustion purposes and an adequate space for servicing and air circulation around the boiler.

Where the installation of the boiler will be in an unusual location special procedures may be necessary and BS 6798:1987 gives detailed guidance on this aspect.

A compartment used to enclose the boiler must be designed and constructed specifically for this purpose. An existing cupboard or compartment may be used provided that it is modified for this purpose.

Details of essential features of cupboard/ compartment design including airing cupboard installations are given in BS 6798:1987. This appliance is not suitable for external installation.

4.3 Gas Supply

A gas meter is connected to the service pipe by the gas supplier.

An existing meter should be checked, preferably by the gas supplier, to ensure that the meter is adequate to deal with the rate of gas supply required for all appliances it serves.

Installation pipes should be fitted in accordance with BS 6891:1988.

Pipework from the meter to the boiler must be of adequate size. Pipes of a smaller size than the boiler inlet connection must not be used.

The complete installation must be tested for soundness as described in the above code.

N.B. If the gas supply for the boiler serves other appliances ensure that an adequate supply is available both to the boiler and the other appliance when they are in use at the same time.

4.4 Flue System

The terminal should be located where dispersal of combustion products is not impeded and with due regard for the damage or discoloration that might occur to building products in the vicinity (see fig 4).

The terminal must not be located in a place where it is likely to cause a nuisance.

In cold and/or humid weather water vapour will condense on leaving the flue terminal. The effect of such ‘pluming’ must be considered.

For protection of combustibles, refer to BS 5440:1 where the terminal is less than 2m (6.6ft) above a pavement or platform to which people have access (including any balcony or flat roof the terminal must be protected by a guard of durable material).

Fig. 4

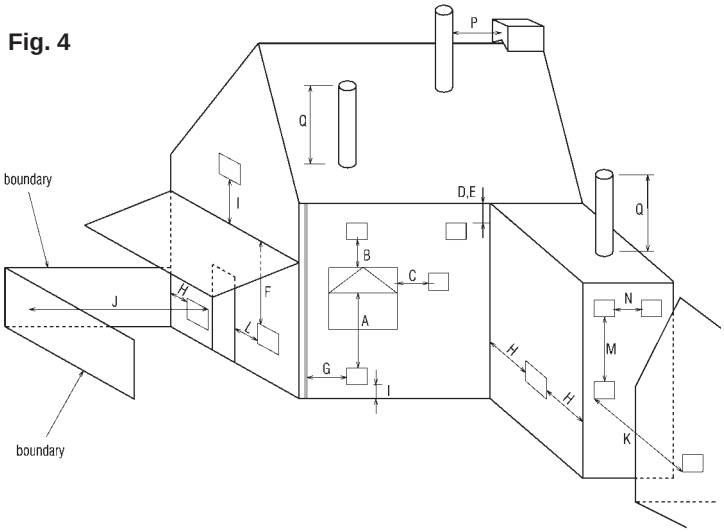

Key	Location	Minimum distance
A	Below an opening (window, air-brick, etc.)	300 mm
B	Above an opening (window, air-brick, etc.)	300 mm
C	To the side of an opening (window, air-brick, etc.)	500 mm
D	Below gutter, drain-pipe, etc.	75 mm
E	Below eaves	200 mm
F	Below balcony, car-port roof, etc.	1200 mm
G	To the side of a soil/drain-pipe, etc.	150 mm
H	From internal/external corner or boundary	300 mm
I	Above ground, roof, or balcony level	300 mm
J	From a surface or boundary facing the terminal	1200 mm
K	From a terminal facing a terminal	1200 mm
L	From an opening in the car-port into the building 1200 mm	
M	Vertically from a terminal on the same wall	1500 mm
N	Horizontally from a terminal on the same wall	300 mm
P	From a structure to the side of the vertical terminal	500 mm
Q	From the top of the vertical terminal to the roof flashing	As determined by the fixed collar of the vertical terminal

NOTE: The flue must be terminated in a place not likely to cause a nuisance.

4.5 Air Supply

The following notes are intended for general guidance.

The room sealed fan flued boiler does not require a permanent air vent for combustion air supply.

Where installed in a cupboard or compartment ventilation is required for cooling.

Positions of Air Vents	Air Vent are as	
	Air From Room or Internal Spaces	Air Direct From Outside
High Level	310 cm^2 48 in^2	155 cm^2 24 in^2
Low Level	310 cm^2 48 in^2	155 cm^2 24 in^2

The table above gives the recommended minimum effective areas of such air vents.

4.6 Water Circulation (Central Heating)

Detailed recommendations are given in BS 6798:1987 and BS 5449:1:1990 (for smallbore and microbore central heating systems).

4.6.1 The following notes are given for general guidance.

4.6.2 Pipework

Copper tubing to BS 2871:1:1971 is recommended for water pipe. Jointing should be either by capillary soldered or with compression fittings.

Where possible, pipes should have a gradient to ensure air is carried naturally to air release points and water flows naturally to drain taps.

It should be ensured as far as possible that the appliance heat exchanger is not a natural collecting point for air.

Except where providing useful heat, pipes should be insulated to prevent heat loss and to avoid freezing. Particular attention should be paid to pipes passing through ventilated spaces in roofs and under floors.

4.6.3 Automatic By-pass

The appliance has a built-in automatic by-pass. However it may be necessary to fit an external bypass should the design of the heating system require such. In any case, the design of the system should be such that it prevents boiler cycling'.

4.6.4 Draining Taps

These must be located in accessible positions to permit the draining of the whole system. The taps must be at least 15mm nominal size and manufactured in accordance with BS 2879:1980.

4.6.5 Air Release Points

These must be fitted at all high points where air will naturally collect, and must be sited to facilitate complete filling of the system.

4.6.6 Expansion Vessel

The appliance has an integral sealed expansion vessel to accommodate the increase of water volume when the system is heated. It can accept up to 10 litres (2.2gals) of expansion water. If the appliance is connected to a system with an unusually high water content, calculate the total expansion and add additional sealed expansion capacity as appropriate (see 8.20).
In general, modern systems will present no problem.

4.6.7 Filling Point

A method for initially filling the system and replacing water lost during servicing is provided on the appliance. (see fig. 5)

In the event that this method is not suitable in a particular area, contact the local authority for preferred methods.

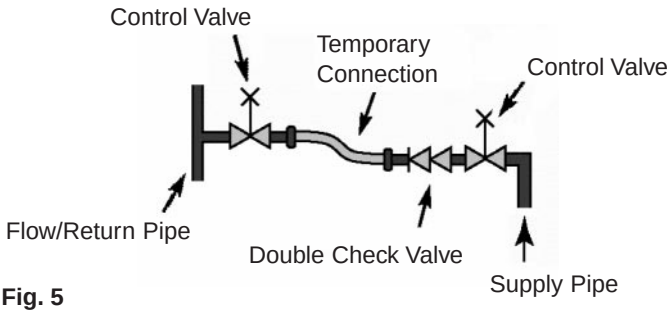

Fig. 5

4.6.8 Frequent Filling

Frequent filling or venting of the system may be indicative of a leak. Care should be taken during the installation of the appliance to ensure all aspects of the system are capable of withstading pressures up to at least 3 bar.

4.7 Electrical Supply

The appliance is supplied for operation on 230V ~ 50Hz electricity supply. It should be protected with a 3-amp fuse.

THIS APPLIANCE MUST BE EARTHED.

The method of connection to the mains electricity must allow complete isolation from the supply. The preferred method is by using a fused double pole switch with a contact separation of at least 3mm.
The switch must supply ONLY the appliance and immediate electrical control circuits (e.g. programmer / room thermostat).
Alternatively, use an unswitched shuttered socket outlet with a fused 3-pin plug both complying with BS 1363.

4.8 Showers

If the appliance is intended for use with a shower, the shower must be thermostatically controlled and be suitable for use with a combination boiler.

4.9 Timber framed buildings

If the appliance is to be fitted in a timber framed Building, it should be fitted in accordance with the Institute of Gas Engineers publication (IGE/UP/7) 'Guide for Gas Installations in Timber Frame Buildings'.

4.10 Mounting on a combustible surface

If the appliance is to be fitted onto a floor of combustible material, i.e. wooden floor, a sheet of fireproof material must be used to protect the floor.

4.11 Inhibitors

Vokera recommend that an inhibitor - suitable for use with copper and aluminium heat exchangers - is used to protect the boiler and system from the effects of corrosion and/or electrolytic action. The inhibitor must be administered in strict accordance with the manufacturers instructions*. *Water treatment of the complete heating system - including the boiler - should be carried out in accordance with BS 7593 and the Domestic Water Treatment Association's (DWTA) code of practice.

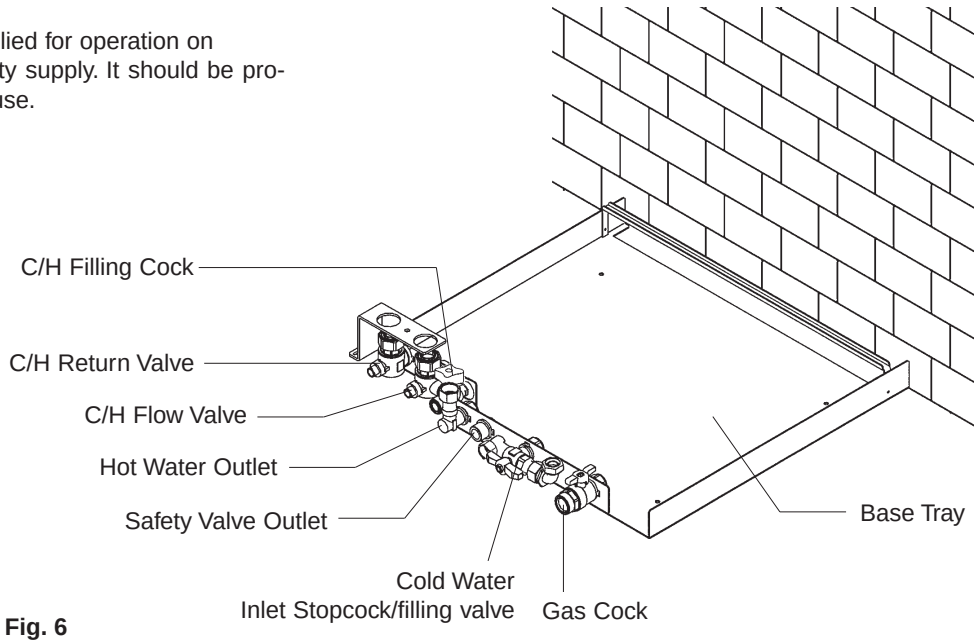

Fig. 6

This appliance must be installed by a competent person in accordance with and defined by, the Standard Specification (Domestic Gas Installations) Declaration (I.S. 813).

4A.1 Related Documents

The installation of this boiler must be in accordance with the relevant requirements of the local-building regulations, the current ETCI National Rules for Electrical Installations, and the bylaws of the local water undertaking. It should be in accordance also with any relevant requirements of the local and/or district authority.

4A.2 Location of Appliance

The appliance may be installed in any room or internal space, although particular attention is drawn to the requirements of the current ETCI National Rules for Electrical Installations, and I.S. 813, Annex K. When an appliance is installed in a room or internal space containing a bath or shower, the appliance or any control pertaining to it must not be within reach of a person using the bath or shower.

The location chosen for the appliance must permit the provision of a safe and satisfactory flue and termination. The location must also permit an adequate air supply for combustion purposes and an adequate space for servicing and air circulation around the appliance. Where the installation of the appliance will be in an unusual location special procedures may be necessary, refer to I.S. 813 for detailed guidance on this aspect. A compartment used to enclose the appliance must be designed and constructed specifically for this purpose. An existing compartment/cupboard may be utilised provided that it is modified to suit. This appliance is not suitable for external installation.

4A.3 Gas Supply

The gas meter - as supplied by the gas supplier - must be checked to ensure that it is of adequate size to deal with the maximum rated input of all the appliances that it serves. Installation pipes must be fitted in accordance with I.S. 813. Pipe work from the meter to the appliance must be of adequate size. Pipes of a smaller size than the appliance gas inlet connection must not be used. The installation must be tested for soundness in accordance with I.S. 813. If the gas supply serves more than one appliance, it must be ensured that an adequate supply is maintained to each appliance when they are in use at the same time.

4A.4 Flue System

wThe terminal should be located where the dispersal of combustion products is not impeded and with due regard for the damage and discoloration that may occur to building products located nearby. The terminal must not be located in a place where it is likely to cause a nuisance (refer to I.S. 813 for guidance on permitted locations and minimum distances of flue terminals). Water vapour will condense on leaving the terminal; the effect of such pluming must be considered. If installed less than 2m above a pavement or platform to which people have access (including balconies or flat roofs) the terminal must be protected by a guard of durable material. The guard must be fitted centrally over the terminal.

Refer to I.S. 813, when the terminal is 0.5 metres (or less) below plastic guttering or 1 metre (or less) below painted eaves.

4A.5 Air Supply

The following notes are intended for general guidance.

The room sealed fan flued boiler does not require a permanent air vent for combustion air supply.

Where installed in a cupboard or compartment ventilation is required for cooling.

Positions of Air Vents	Air Vent are as	
	Air From Room or Internal Spaces	Air Direct From Outside
High Level	310 cm^2 48 in^2	155 cm^2 24 in^2
Low Level	310 cm^2 48 in^2	155 cm^2 24 in^2

The table above gives the recommended minimum effective areas of such air vents.

4A.6 Water Circulation

Specific recommendations are given in I.S. 813. The following notes are for general guidance only.

4A.6.1 Pipework

It is recommended that copper tubing be used in conjunction with soldered capillary joints. Where possible pipes should have a gradient to ensure air is carried naturally to air release points and that water flows naturally to drain cocks. Except where providing useful heat, pipes should be insulated to avoid heat loss and in particular to avoid the possibility of freezing. Particular attention should be paid to pipes passing through ventilated areas such as under floors, loft space, and void areas.

4A.6.2 Automatic By-pass

The appliance has a built-in automatic by-pass. However it may be necessary to fit an external bypass should the design of the heating system require such. In any case, the design of the system should be such that it prevents boiler cycling'.

4A.6.3 Drain Cocks

These must be located in accessible positions to facilitate draining of the appliance and all water pipes connected to the appliance.

4A.6.4 Air Relase Points

These must be positioned at the highest points in the system where air is likely to be trapped. They should be used to expel trapped air and allow complete filling of the system.

4A.6.5 Expansion Vessel

The appliance has an integral expansion vessel to accommodate the increased volume of water when the system is heated. It can accept up to 10 litres of expansion from within the system, generally this is sufficient, however if the system has an unusually high water content, it may be necessary to provide additional expansion capacity (see 8.20).

4A.6.6 Filling Point

A suitable method for initial filling of the system and replacing water lost during servicing etc. is required (see fig. 5). You should ensure this method of filling complies with the local water authority regulations.

4A.6.7 Frequent Filling

Frequent filling or venting of the system may be indicative of a leak. Care should be taken during the installation of the appliance to ensure all aspects of the system are capable of withstanding pressures up to at least 3 bar.

4A.7 Electrical supply

The appliance is supplied for operation on 230V @ 50Hz electrical supply; it must be protected with a 3-amp fuse. The method of connection to the mains electricity supply must allow for complete isolation from the supply. The preferred method is by using a double-pole switch with a contact separation of at least 3mm. The switch must only supply the appliance and its corresponding controls, i.e. time clock, room thermostat, etc.

4A.8 Showers

If the appliance is intended for use with a shower, the shower must be thermostatically controlled and be suitable for use with a combination boiler.

4A.9 Mounting on a Combustible Surface

If the appliance is to be fitted onto a floor of combustible material, i.e. wooden floor, a sheet of fireproof material must be used to protect the floor.

4A.10 Timber Framed Buildings

If the appliance is to be fitted in a timber framed-building, it should be fitted in accordance with I.S. 813 and local Building Regulations. The Institute of Gas Engineers publication (IGE/UP/7) ‘Guide for Gas Installations in Timber Frame Buildings’ gives specific advice on this type of installation.

4A.11 Inhibitors

Vokera recommend that an inhibitor - suitable for use with copper and aluminium heat exchangers - is used to protect the boiler and system from the effects of corrosion and/or electrolytic action. The inhibitor must be administered in strict accordance with the manufacturers’ instructions*. *Water treatment of the complete heating system - including the boiler - should be carried out in accordance with I.S. 813 and the Domestic Water Treatment Association’s (DWTA) code of practice.

4A.12 Declaration of Conformity

A Declaration of Conformity (as defined in I.S. 813) must be provided on completion of the installation. A copy of the declaration must be given to the responsible person and also to the gas supplier if required.

Fig. 7

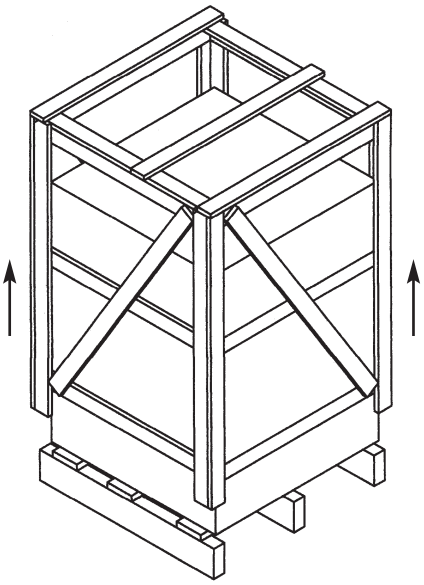

Fig. 8

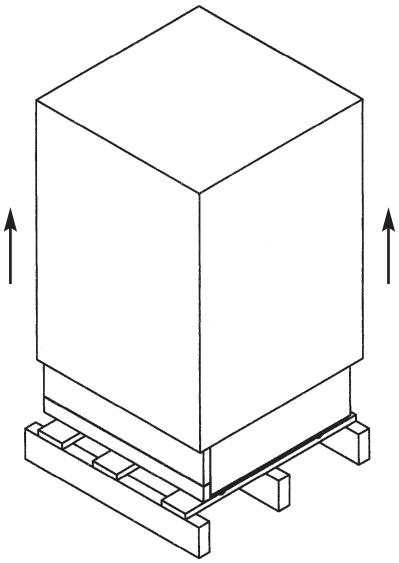

Fig. 9

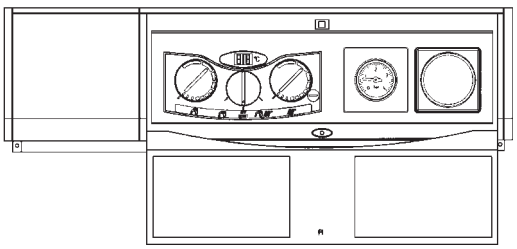

5.1 Delivery (see fig. 7)

The appliance is delivered in a crated heavy duty cardboard carton.

5.2 Unpacking (see fig. 7 & 8)

Stand the boiler the correct way up and remove the surrounding timber frame.Slide the protecting packaging from around the appliance. Remove appliance from base pallet.

The appliance comes complete with a base tray which can easily be removed. The purpose of the base tray is that it can be used as a template to preplumb the appliance before final fitting.

To remove the base plate from the appliance, push to release the control panel door, locate the small tool inside and undo the two screws securing the front panel to the appliance and remove. Loosen and undo the Central heating flow and return unions, cold water inlet union, hot water outlet union, gas union and safety valve union. See figs 6 & 10.

Ensure the filling inlet tap is in a horizontal position. Either slide the base plate out from the rear of the appliance or slide the appliance forwards off the base plate. The appliance is on wheels easing this operation.

The Base Tray Contains:
Central heating valves (2)
Gas service tap (1)
Cold water Filling/Inlet (1)
Hot water outlet Connection (1)
Found packed inside the appliance:
Safety valve outlet pipe (1)
Filling loop hose (1)
Various washers
Base plate screws (2)
Spare front panel door tool (1)
Restrictor ring (1)

Flue kit supplied in separate carton.

Fig. 10

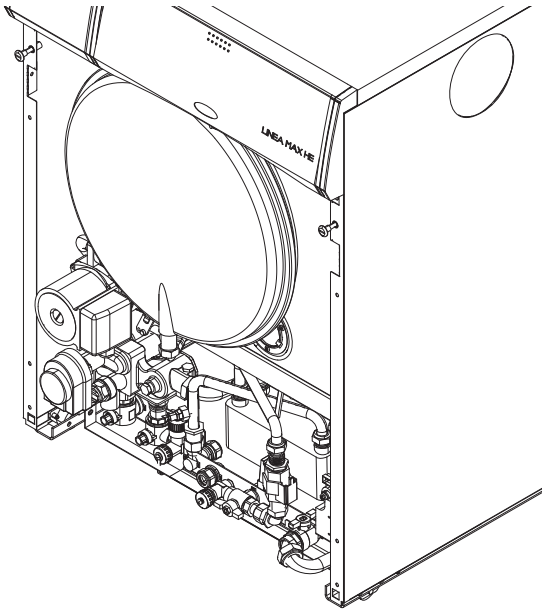

Fig. 11

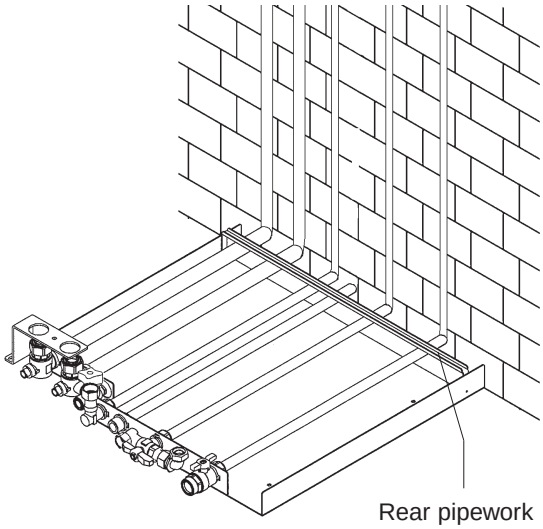

Fig. 12

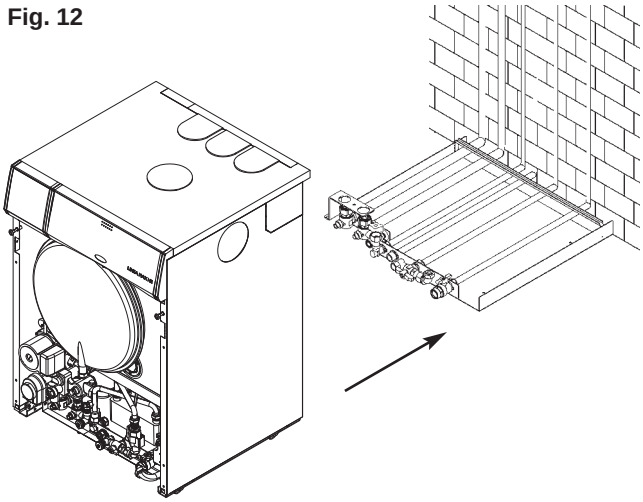

Fig. 12a

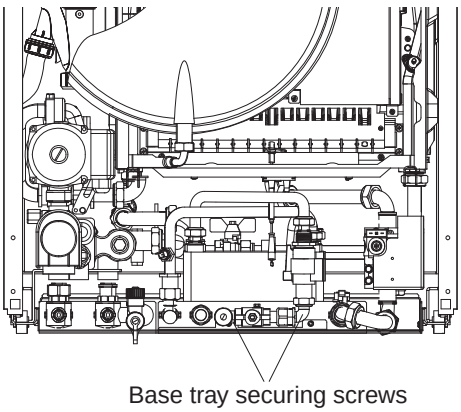

5.3 Siting the Appliance

5.3.1 The appliance is floor standing. Place the base plate on a smooth firm and level surface. The back of the base tray can be pushed flush against the back wall if necessary (this will still allow piping behind the appliance see figs 6 &11). Special floor protection is not required and the floor must be capable of supporting the weight of the appliance See section 3..

If the appliance is to be fitted in a timber framed building it should be fitted in accordance with the Institute of Gas Engineers publication (IGE/UP/7) 'Guide for Gas Installations in Timber Frame Buildings'.

5.3.2 If necessary drill holes through the wall to allow passage of pipework before final base plate fixture see fig 11.

5.3.3 Drill and plug the floor for 4 - 1" No. 10 screws and screw the base tray firmly into position using rust proof countersunk screws.

5.3.4 Refer to figs.15 for relevant dimensions for locating the flue hole: Where it is remote from the boiler take special care to ensure hole is at the correct level. Drill a 105mm hole through the wall to allow passage of the flue pipe.

5.3.5 Connecting the Gas and Water

5.3.6 Figs. 6 and 15 show the locations of the fittings.

5.3.7 When connecting pipework to valves do not over tighten nuts, use another spanner to apply counter force to avoid damaging/moving the valves/baseplate.

5.3.8 Gas Supply
Connecting the gas supply.

Connect a 15mm gas pipe to the gas service tap and tighten the union nut securing the tap to the appliance.

Pipework from the meter to the appliance must be of adequate size.

A minimum gas pressure of 20mb (8 in. w.g.) must be available at the appliance inlet at full flow rate. See section 3.

DO NOT use pipes of a smaller size than the appliance inlet connection.

5.3.9 Central Heating
Connect the central heating pipework (22mm o.d) to the respective valves, right hand: flow, left hand: return, and tighten the nuts.

5.3.10 Hot Water
Connect a 15mm pipe to the hot water outlet connection of the appliance. Tighten the nut.

If the hot water system does not include a tap below the hot water outlet connection, provide a suitable drain tap to permit draining of the appliance hot water side during servicing.

5.3.11 Cold Water

Connect a 15mm cold water service pipe to the inlet stopcock of the appliance. Tighten the nut.

If the cold water supply is liable to high pressure or large pressure fluctuations, a flow/pressure regulator should be fitted in the supply pipe.

Should the appliance be subject to 'mains knock' it would be advisable to install a non return valve in the hot water outlet pipe to prevent unnecessary activation of the domestic flow switch.

5.3.12 Safety Valve Discharge

Connect a 15mm pipe to the discharge outlet of the appliance.

The discharge should terminate facing downwards outside the building in a position where discharging (possibly boiling) water will not create danger or nuisance; but in an easily visible position.

5.3.13 Condense Pipe

During normal operation the boiler produces condense which is collected in a trap located in the boiler. A flexible pipe (condense outlet pipe) is connected to the outlet of the trap. The flexible pipe must be connected to a plastic waste pipe only. The plastic waste pipe must have a minimum of a 3º fall towards the drain. Any external run of pipe should be insulated to prevent the risk of freezing.

5.3.14 Condensate collection (see fig. 13)

For transit purposes, the condensate hose is located inside the appliance at the left rear side. Once the appliance is ready to be 'wheeled' into position, retract the condensate hose from it location and feed it between the flow and return valves to ensure it does not become fouled whilst the appliance is being wheeled into position.

NOTE: You must ensure that the condensate hose and external pipework is always at a lower height than the appliance condensate trap. if it's necessary to have the condensate pipework at a higher position, then it will be necessary to use a condensate pump. Please contact Vokera technical for specific advice.

IMPORTANT

The condensate pipework must be installed in accordance with local Building regulations and/or other rules in force.

5.3.15 Condensate drain pressure switch

The correct operation of the drain trap and the condensate drain system is controlled by a differential pressure switch. In the event of malfunctions, a temporary alarm is activated (see the chapter "self diagnostic error").

5.3.16 Once all relevant pipework has been installed and the flue hole has been cut,the appliance can be slid into position. If the filling inlet valve is in the off position (verticaly up) remove the handle from the valve (this will allow the appliance to slide into position without fouling the component).

Stand the appliance in front of the base tray See fig.12. and gently slide into position. Tighten the nuts from the valves on the base plate to the corresponding inlet/outlet connections on the appliance using the fibre washers supplied.

Finally secure the appliance to the base tray using the 2 screws provided. See fig.12a.

Fit the filling loop hose and safety valve outlet pipe and replace the filling/inlet valve handle.

Alternatively before the appliance is positioned the system and supplies can be filled and pressure tested using the Vokèra pressure test kit (part no. 401). Pressure test kit instructions supplied with kit.

Note: All pipework can be installed to run up behind the appliance. Ensure that the pipes pass behind the reference bar to prevent the pipes fouling the appliance when it is pushed into position. See fig. 11.

Remove the knock out panel in the top panel for pipe clearance.

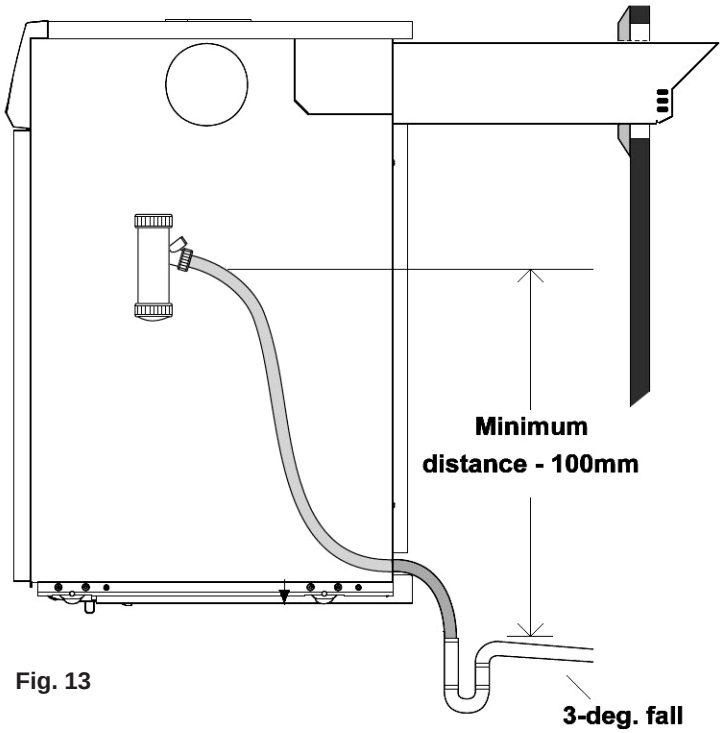

Fig. 13

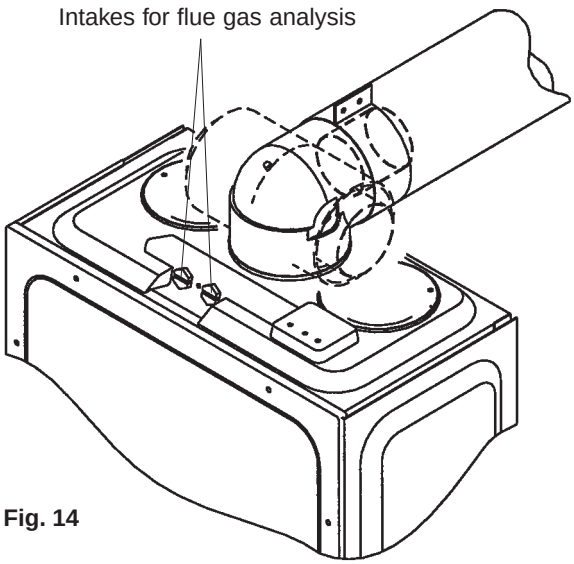

Fig. 14

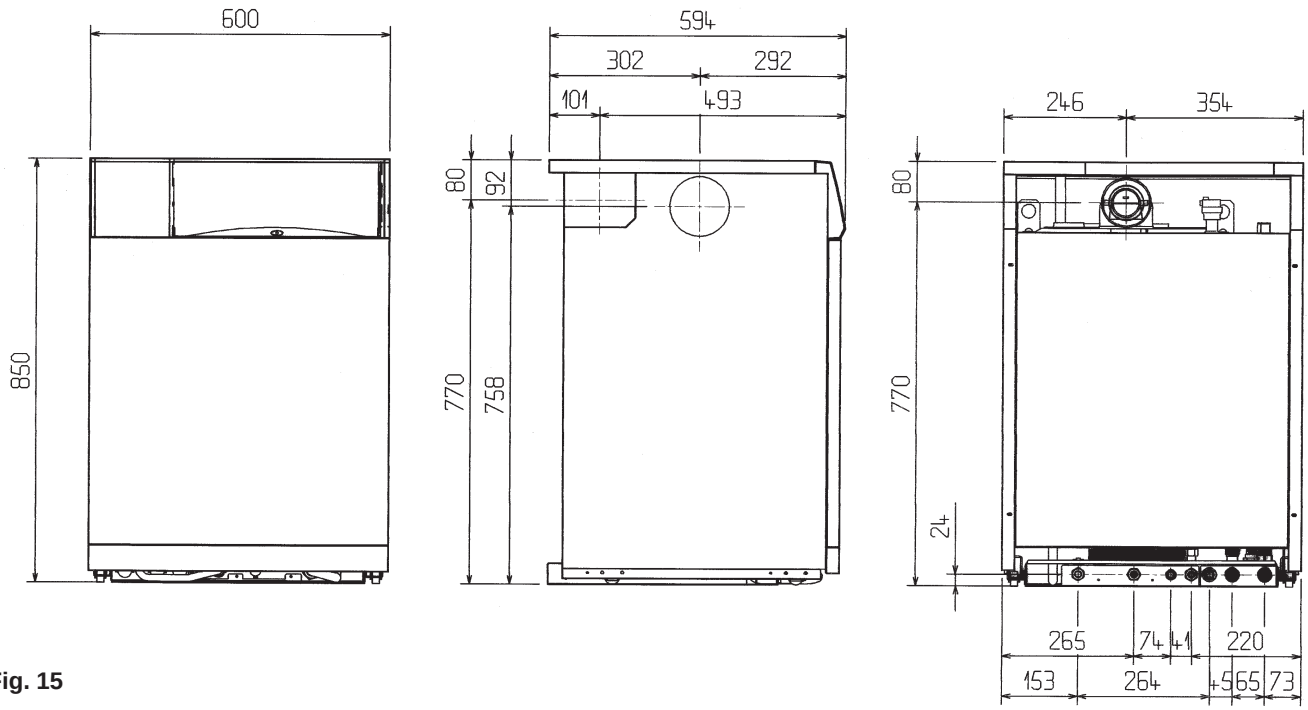

Fig. 15

5.4 Installing the flue system

Care should be exercised when determining the position of the appliance and route of the flue system with respect to hidden obstructions such as pipes, cables, etc.

5.5 Fitting the flue

The top flue outlet permits both horizontal and vertical flue applications to be considered. Alternatively, the Vokera twin flue system can be utilised if longer flue runs are required.

5.5.1 Concentric horizontal flue

(For concentric vertical flue, see 5.5.2)
(For twin flue applications, see 5.5.3)
The appliance flue outlet elbow can be rotated through 360º on its vertical axis. In addition the flue may be extended from the outlet elbow in the horizontal plane (see 3.9). A reduction must also be made to the maximum length (see table) when additional bends are used.

Reduction for additional bends

Bend	Reduction in maximum flue lenght for each bend
45°	0,5 metre
90°	1,0 metre

Horizontal flue terminals and accessories

Part No.	Description	Min-Max Length
0225720	Horizontal flue kit For use with add. Bends & extensions	1000 mm
0225755	Telescopic extension	350mm- 500mm
0225740	0.5m extension	500 mm
0225745	1.0m extension	1000 mm
0225750	2.0m extension	2000mm
0225730	45º bend (pair)	N/A
0225735	90º bend	N/A
0225760	Wall bracket (5)	N/A

5.5.1.1 Fitting the horizontal flue kit

Using the dimensions given in fig. 15, mark and drill a 115mm level hole for the passage of the flue pipe.

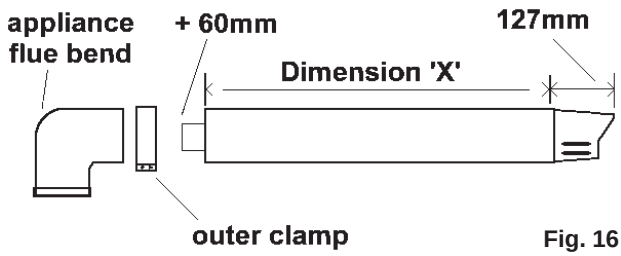

Fig. 16

Carefully measure the distance from the outer edge of the appliance flue bend to the finished outside wall and add 5mm (dimension X).
Using the above value (dimension ‘X’), measure from the edge of the terminal end cap and mark the outer 100mm for cutting. Cut off any excess ensuring any burrs are removed.

NOTE: Cut only the outer 100mm pipe at this stage.

Measuring from the edge of the outer 100mm pipe, add 60mm and mark the cutting position of the inner (60mm) pipe (this ensures the inner pipe is 60mm longer than the outer pipe.

Cut off any excess, ensuring any burrs are removed. Pass the concentric flue pipe through the previously drilled hole. Fit the flue pipe to the appliance flue outlet bend ensuring the correct seal is made.

Using the outer clamp, gasket, and screws supplied, secure the outer flue pipe to the appliance flue bend. The 60mm M & F adaptor and flue bend (supplied with the flue kit) can be discarded.

NOTE: Fit the internal (White) trim to the flue assembly prior to connecting the flue pipe to the bend if it’s required.

You must ensure that the entire flue system is properly supported and connected.

Seal the flue assembly to the wall using cement or a suitable alternative that will provide satisfactory weatherproofing. The exterior trim (Black) can now be fitted.

5.5.1.2 Extending the flue (see fig. 16a)

Additional bends & extensions have push-fit connections, care should be taken to ensure that the correct seal is made when assembling the flue system. Connect the required number of flue extensions or bends (up to the maximum equivalent flue length) to the flue terminal (see fig. 16a).

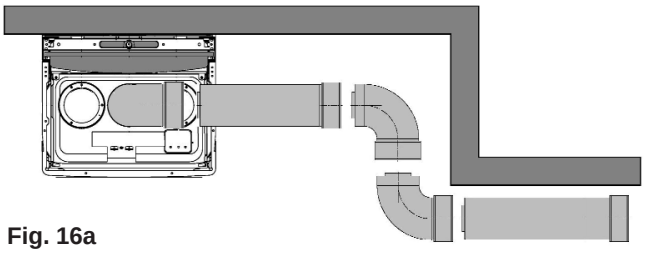

Fig. 16a

The flue pipe should have a minimum 1º (17mm for every 1.0-metre) rise from the boiler to the terminal, to ensure any condense fluid that forms, is allowed to drain back to the appliance.

NOTE: When cutting an extension to the required length, you must ensure that the excess is cut from the plain end of the extension (see fig. 16a). Remove any burrs, and check that all seals are located properly.

You must ensure that the entire flue system is properly supported and connected.

Seal the flue assembly to the wall using cement or a suitable alternative that will provide satisfactory weatherproofing.

5.5.2 Concentric vertical flue (see fig. 16b)

The appliance can be used with either the Vokera condensing 60/100mm concentric flue system or the optional 80/125mm concentric flue system.

NOTE: These instructions relate only to the Vokera condensing 60/100mm concentric flue system. For specific details on the installation of the 80/125mm concentric flue system please refer to the instructions supplied with the 80/125mm terminal.

The vertical flue terminal can be connected directly to the appliance flue outlet. Alternatively, an extension can be connected to the appliance flue outlet if required, however if additional bends are fitted, a reduction must be made to the maximum flue length (see table below).

Reduction for bends

Bend	Reduction in maximum flue length for each bend
45°	0,5 metre
90°	1,0 metre

Vertical flue terminal and accessories

Part No.	Description	Length
0225725	Vertical flue terminal	1.0 metre
0225770	Pitched roof flashing plate	N/A
0225765	Flat roof flashing plate	N/A
0225755	350-500 telescopic extension	350mm - 500mm
0225740	500mm extension	500mm
0225745	1000mm extension	1000mm
0225750	2000mm extension	2000mm
0225730	45º bend (pair)	N/A
0225735	90º bend	N/A
0225760	Wall bracket (4)	N/A

Using the dimensions given in fig. 15 & 16b as a reference, mark and cut a 107mm hole in the ceiling and/or roof.

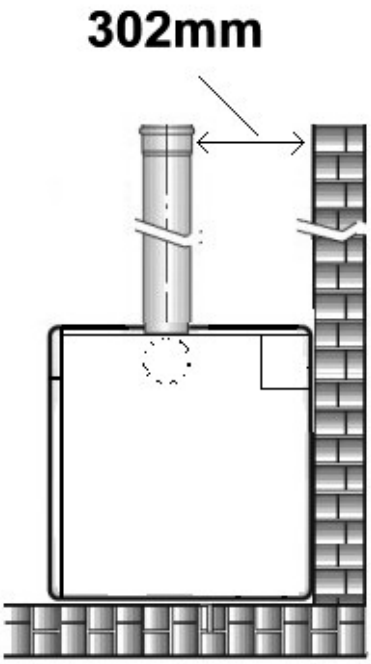

Fig. 16b

Fit the appropriate flashing plate to the roof and insert the vertical flue terminal through the flashing plate from the outside, ensuring that the collar on the flue terminal fits over the flashing.

IMPORTANT

The vertical flue terminal is 1.0 metre in length and cannot be cut.

Connect the vertical flue assembly to the boiler flue spigot using the clips, gaskets, & screws (supplied), ensuring the correct seal is made. The flue support bracket (supplied with the vertical flue kit) can now be fitted.

If the vertical flue requires extension/s or additional bend/s, connect the required number of flue extensions or bends (up to the maximum equivalent flue length) between the boiler and vertical flue assembly (see fig. 16a).

Ensure that any horizontal sections of the flue system have a minimum 1º fall back to the boiler (17mm per 1000mm)

NOTE: When cutting an extension to the required length, you must ensure that the excess is cut from the plain end of the extension (see fig. 16a). Remove any burrs, and check that any seals are located properly.

You must ensure that the entire flue system is properly supported and connected.

5.5.3 Twin flue system

The Vokera twin flue system enables greater flue distances to be achieved than that of the standard concentric flue system. The twin flue system can be used for horizontal applications, however it must be converted to the dedicated concentric flue kit for termination. It is essential that the installation of the twin flue system be carried out in strict accordance with these instructions.

Guidance notes on twin flue installation

- The flue must have a fall back of 1º back to the appliance to allow any condensate that may form in the flue system to drain via the condensate drain. Consideration must also be given to the fact that there is the possibility of a small amount of condensate dripping from the terminal.
- Ensure that the entire flue system is adequately supported, use at least one bracket for each extension.
- The entire flue system must be adequately insulated to maintain heat within the flue system thereby reducing the possibility of condensate production.
- As the exhaust outlet pipe can reach very high temperatures it must be protected to prevent persons touching the hot surface.
- The condensate drainpipe must be connected in accordance with local building regulations that are in force.

Reduction for bends

Bend	Reduction in maximum flue length for each bend
45°	1,0 metre
90°	1,0 metre

Twin flue accessories

Part No.	Description	Length
0225805	Horizontal flue terminal	1.0 metre
513	Twin adapter kit	N/A
0225770	Pitched roof flashing plate	N/A
0225765	Flat roof flashing plate	N/A
0225845	90º bend (pair)	N/A
0225840	45º bend (pair)	N/A
0225820	0.25m extension (pair)	250mm
0225825	0.5m extension (pair)	500mm
0225830	1.0m extension (pair)	1000mm
0225835	2.0m extension (pair)	2000mm
0225850	Twin bracket (5)	N/A
0225855	Single bracket (5)	N/A

5.5.3.1 Installation of twin adaptor kit (See fig. 17)

- Insert the exhaust connection manifold (A) onto the appliance flue outlet.
- Remove the blanking plate (located to the right of the appliance flue outlet) and – using the same screws – install the air inlet plate (B).
- Using the hole in the exhaust connection manifold as a guide, drill a 3mm hole in the appliance flue spigot and secure the exhaust manifold connection to the flue spigot using the screw provided (C).
- Using the two holes in the air inlet plate as a guide, drill a 3mm hole in each and secure the air inlet pipe/bend using the screws provided.
- The twin flue pipes extensions and accessories can now be installed by pushing together (the plain end of each extension or bend should be pushed approximately 50mm into the female socket of the previous piece).

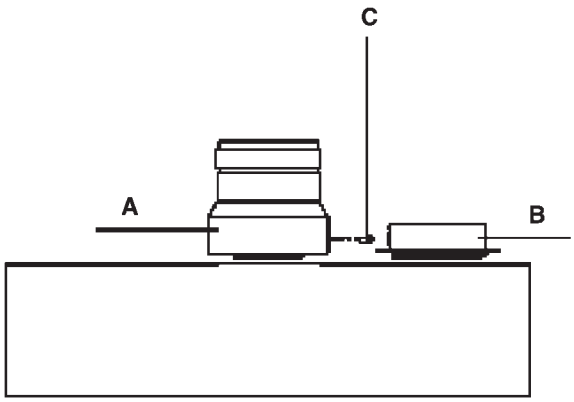

Fig. 17

5.5.3.2 Horizontal termination (See fig. 18)

The twin flue system must be converted to the dedicated concentric flue kit for termination.

- The horizontal terminal is supplied with a built-in converter box and cannot be shortened.
- A 130mm hole is required for the passage of the concentric terminal through the wall.

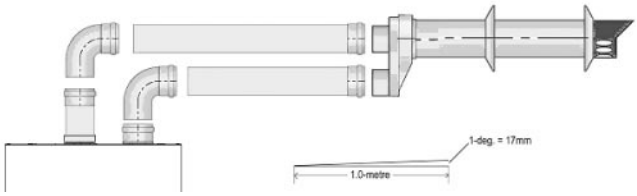

Fig. 18

Depending on site conditions it may be preferable to install the terminal assembly prior to fitting the twin flue pipes.

Mark and drill a 130mm hole for the passage of the horizontal flue terminal, ensuring that there is a minimum 1º fall back to the boiler (17mm per 1000mm). Insert the terminal assembly into the flue hole.

Push-fit the twin flue pipes onto the concentric to twin converter box ensuring that the exhaust pipe connects to the exhaust connection on the concentric to twin converter.

If necessary cut the plain ends (male) of the twin flue pipes to allow connection to the concentric to twin converter.

NOTE: before cutting twin flue pipes ensure allowances have been made for connection onto the previous piece and onto the concentric to twin converter. The last twin Flue pipes must be pushed 50mm onto the male spigots of the concentric to twin converter.

NOTE: You must ensure that the entire flue system is properly supported and connected.

Seal the flue terminal assembly to the wall using cement or a suitable alternative that will provide satisfactory weatherproofing. The interior and exterior trim can now be fitted.

5.5.3.3 Vertical termination

Contact Vokera technical help-line for specific guidance.

5.6 Electrical Connections

5.6.1 The electricity supply must be as specified in clause 4.7. If controls external to the appliance are required, design of the external electrical circuits should be undertaken by a competent person.

See Section 10 for further advice.

N.B. IT IS ESSENTIAL THAT ALL EXTERNAL CONTROL CIRCUITS AND WIRING IS WIRED FROM THE SAME ELECTRICAL ISOLATOR AS SERVES THE APPLIANCE.

Factory fitted internal wiring must not be disturbed when wiring external controls.

5.6.2 To gain access to the electrical terminals

Reposition front control panel by first pulling it free from 4 locating lugs. Rotate the panel through 90° degrees and relocate it into the lower position using the locating hooks as shown in fig.19 & 20.

Remove electrical cover by releasing nine securing screws (see fig. 20).

The mains input terminal block is now easily visible (marked 1 - 6).

5.6.3 The electricity supply cable from the isolator and the appliance terminal block must be 3 core flexible sized 0.75mm˝ (24 x 0.2mm) to table 15-16, BS6500.

Wiring to the appliance should be rated for operation in contact with surfaces up to 90°C.

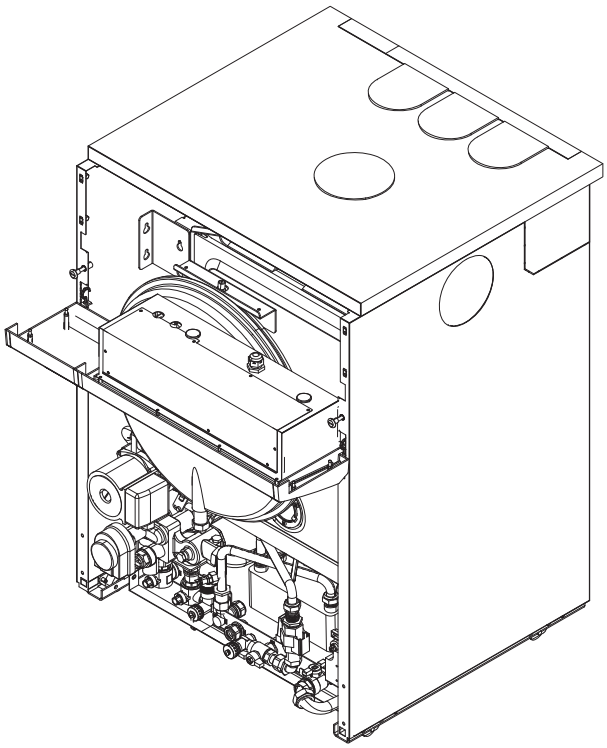

Fig. 19

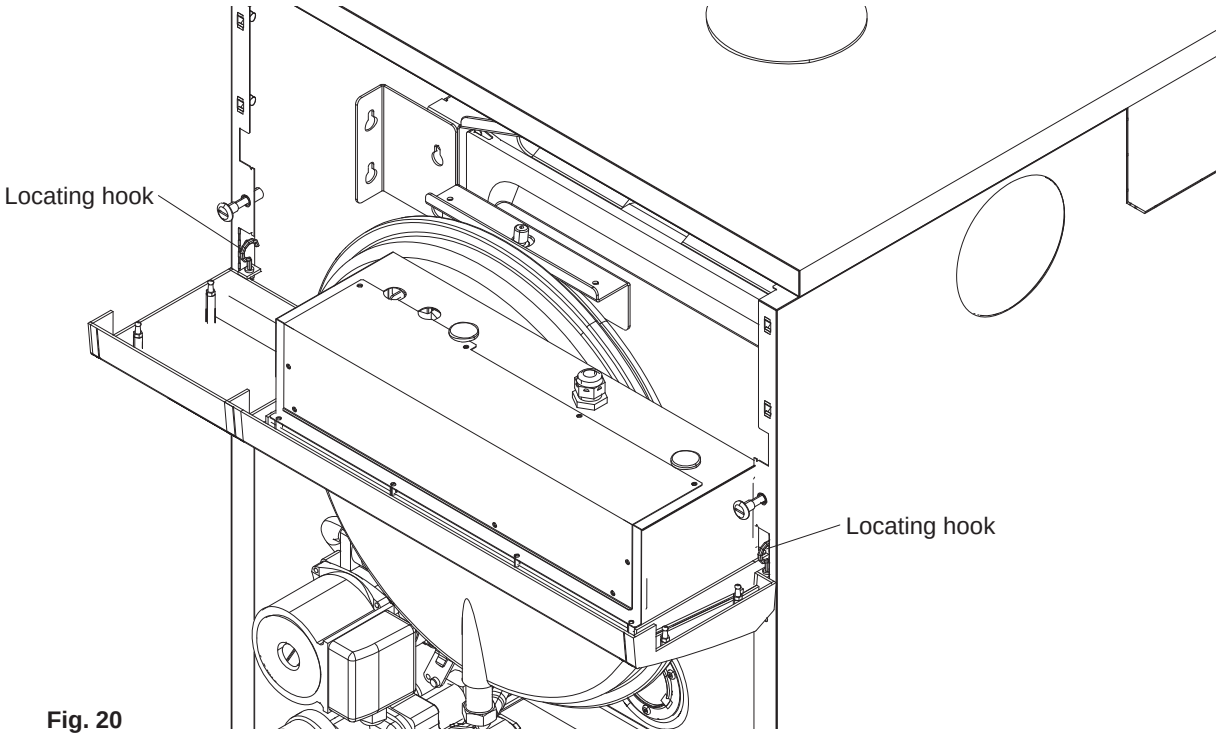

Fig. 20

5.6.4 Pass the cable through one of the cord anchorage points and connect the wires Brown to L1, Blue to N, and Green/Yellow to ⏚ of the terminal strip. Arrange the cable so that should the cable slip the anchorage the current carrying conductors become taut before the earthing conductor.

5.6.5 Securely tighten all terminal screws and arrange the cable with slack between the cable anchor and the terminal block. Tighten the cord anchorage screw until the cable is secure.

5.6.6 Neatly arrange the external cable in such a way that unrestricted opening of the controls fascia and repositioning is possible without strain on the cable.

5.6.7 External controls may be wired from terminals 1 & 2 or 2 & 3 after removing the factory fitted link (between 2 & 3) depending on wiring configuration (see section 10 for further details). If a neutral is needed use the terminal marked N on the terminal strip.

DO NOT CONNECT ANY WIRES TO THE PRINTED CIRCUIT BOARD TERMINALS.

Section 10 gives details of fitment for external and internal controls (ie Vokèra time clock).

If required pass the external controls cable through the spare cord anchorage and arrange the cable so that should the cable slip the anchorage the current carrying conductors become taut before the earthing conductor.

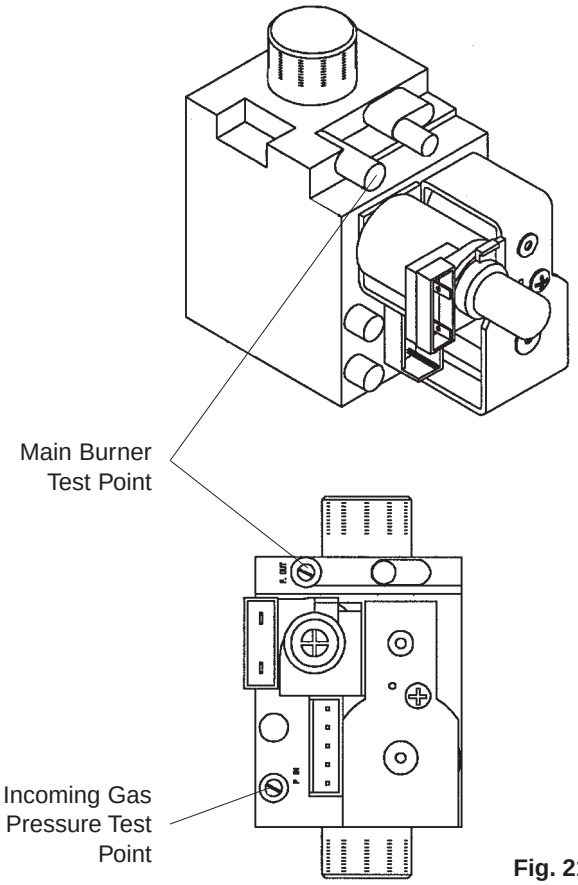

Fig. 21

C/H Filling Cock

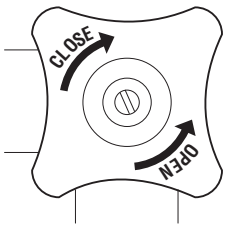

Normal Operating Position

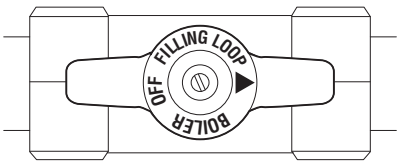

Closed Position

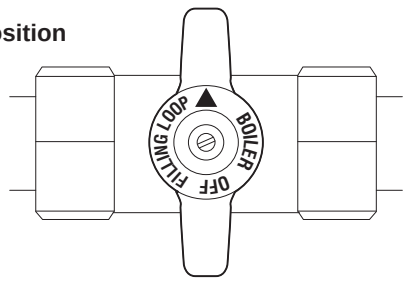

Filling Position

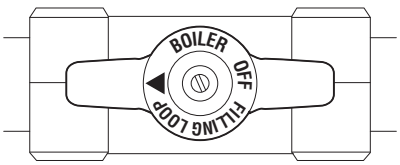

Fig. 22

6.1 Where the text bears identifying numbers in brackets, refer to figs. 1 and 2 unless otherwise instructed.

6.2 Gas Supply Installation
Inspect the entire installation including the meter. Test for soundness and purge, all as described in BS6891:1988.

6.3 Central Heating Systems
The appliance contains components that may become damaged or rendered inoperable by oils and/or debris that are residual from the installation of the system, consequently it is essential that the system be flushed in accordance with the following instructions.

6.3.1 **IMPORTANT** DO NOT RELEASE AIR FROM THE RED SEALED EXPANSION TANK. It is charged with air at the factory from .75 - .80 bar (11 - 12psig)

6.3.2 Initial filling of the System

6.3.2.1 Means of filling sealed system: To accord with BS and/or local Water Authority requirements.

6.3.2.2 Open central heating flow and return valves. Unscrew black cap on automatic air release valve (25) one full turn. (Leave open permanently).

6.3.2.3 Close all air release taps on the central heating system.

6.3.2.4 Identify the filling/inlet valve found at the base of the appliance and the C/H filling cock. See fig. 6 & 22.

The filling loop may have been disconnected from the filling/inlet valve and heating flow valve. If so reconnect unscrewing the caps as necessary.
The filling/inlet valve has 3 positions. (Fig. 22)

i) Vertically up - closed position.
ii) Turn to the left to horizontal - filling position.
iii) Turn to the right to horizontal - normal operating position.

To fill, open the C/H filling cock and slowly turn the handle of the filling/inlet valve from the closed position towards the filling position. Mains water will be heard to enter the system/boiler. As the water enters the system/ boiler the pressure gauge will be seen to rise. Pressurise to between 1bar & 1.5bar when the system is cold. DO NOT OVERPRESSURISE. Once the desired pressure is achieved turn the filling/inlet valve back to the closed position and close C/H filling cock.

6.3.2.5 Starting with the lowest radiator open each air release tap in turn closing it only when clear water, free of bubbles, flows out. In the same away release air from any high points in the pipework.

6.3.2.6 Continue filling the system until at least 1.0 bar registers on the gauge then turn the handle of the filling/inlet valve back to the closed position.

6.3.2.7 Inspect the system for water soundness and remedy any leaks discovered.

6.3.3 Initial Flushing of the Pipework
The whole of the heating system must be flushed both cold and later hot as detailed in 6.11.1. Open all radiator or heating valves and the appliance central heating valves.

Drain the boiler and system from the lowest points. Open the drain valve full bore to remove any installation debris from the boiler prior to lighting. Refill the boiler and heating system as described in 6.3.2.

6.3.4 Setting the System Design Pressure

6.3.4.1 The design pressure should be a minimum of 1 bar and maximum 1.5 bar.

6.3.4.2 The actual reading should ideally be 1 bar plus the equivalent height in metres to the highest point of the system above the base of the appliance. (Up to the maximum of 1.5 bar total). N.B. The safety valve is set to lift at 3bar/ 30m / 45psig.

6.3.4.3 To lower the system pressure to the required value, pull the lever on the head of the safety valve to release water until the required figure registers on the gauge.

6.3.5 Filling the Hot Water System

6.3.5.1 Close all hot water draw-off taps.

6.3.5.2 Turn filling/inlet valve to the normal operating position (horizontally to the right). See fig.22

6.3.5.3 Slowly open each draw-off until clear water is discharged.

6.4 Checking Electricity Supply

6.4.1 Carry out preliminary checks for continuity, polarity, and resistance to earth, gaining access as required according to 5.6.2 in this manual.

6.4.2 Leave the appliance with the control fascia open and with the mains electricity switched OFF

6.5 Pre-operation Check
Before attempting the initial lighting of the appliance, the following checks must be carried out:

- Ensure all gas service valves from the meter to the appliance are open and the supply pipe has been properly purged.
- Ensure the proper electrical checks have been carried out, (see section 10) particularly continuity, polarity, and resistance to earth
- Ensure the 3 AMP fuse – supplied with the appliance – has been fitted.
- Ensure the system has been filled, vented, and the pressure set to 1 BAR.
- Ensure the flue system has been fitted properly and in accordance with the instructions.
- Ensure all appliance service valves are open.

6.6 Lighting the Boiler

6.6.1 Ensure flow and return valves are open.
If external and/or internal controls are fitted (e.g Timeclock and/or Room thermostat) ensure they ‘call for heat’. The commissioning of the appliance may be easier if the external/internal controls are disconnected and terminals 2 & 3 are linked. (For access procedure turn off electricity and refer to 5.6.2 for instructions).

6.6.2 Switch on the mains electricity and turn the on / off / mode switch to .

6.6.3 Set the c/h control knob to the highest setting.

6.6.4 The pump only will run for approximately 1 minute, the appliance will then go through an ignition sequence and the burner will light.

6.6.5 If during the ignition attempt period (10 secs approx.) the boiler fails to light, the ignition control circuit will go to lockout. This is indicated by the status LED flashing red accompanied by a flashing error code 01 shown in the temperature indicator. The gas valve is de-energised, but leaves the fan and pump running for approximately 2 minutes after lockout.

6.6.6 In the event of the boiler going to lockout turn the mode selector switch to the reset position for approximately 10 seconds, then back to the original position. The two main causes of the boiler going to lockout during commissioning are electrical supply polarity reversed, or air in the gas supply. Check polarity and that the gas supply is completely purged of air, and that gas is reaching the boiler, then repeat from 6.6.2.

6.7 Checking Burner Pressures

6.7.1 The heat inputs gas rates are factory set to the maximum values given in section 3.1 & 3.2 for domestic hot water and central heating but it is necessary to check them when commissioning.

6.7.2 Turn off the main electricity supply. Gain access to the interior by removing front door panel.

6.7.3 Locate the main burner pressure test point (see fig. 23) and slacken the screw half a turn in an anti clockwise direction. Attach a suitable U gauge tube between the test nipple and manometer (see fig. 23).

IMPORTANT: Before measuring gas pressures it is imperitive that the protective cover over the gas valve adjustment screw is removed.

Turn on electricity supply and fully open a domestic hot water tap to operate boiler in dhw mode. Adjust hot water control knob to it's maximum setting.

6.7.4 The pressure reading for maximum rate should be:

10.1mbar
(plus or minus 1.0mbar)

If the pressure is wrong it should be adjusted as instructed in 8.25 (N.B. Whenever the maximum rate is adjusted check and adjust the minimum rate too)

6.7.5 Reduce the domestic water flow rate to approx. 3-4 litres/min, turn the domestic control knob slowly to minimum. The boiler output will reduce to the minimum setting. If low flame cannot be established in this way, turn off the electricity supply and remove one of the grey wires connecting to the modulator coil on the front of the gas valve. Switch on the electricity supply. The boiler will now light at the minimum setting.

6.7.6 When low flame is established, the pressure reading should be:

1.3mbar
(plus or minus 0.13mbar)

If it is different adjustment should be made in accordance with the instructions in 8.25.

6.7.7 If the grey wire from the modulator coil was removed to check the minimum setting, turn off the electricity supply and replace the wire onto the modulator coil.

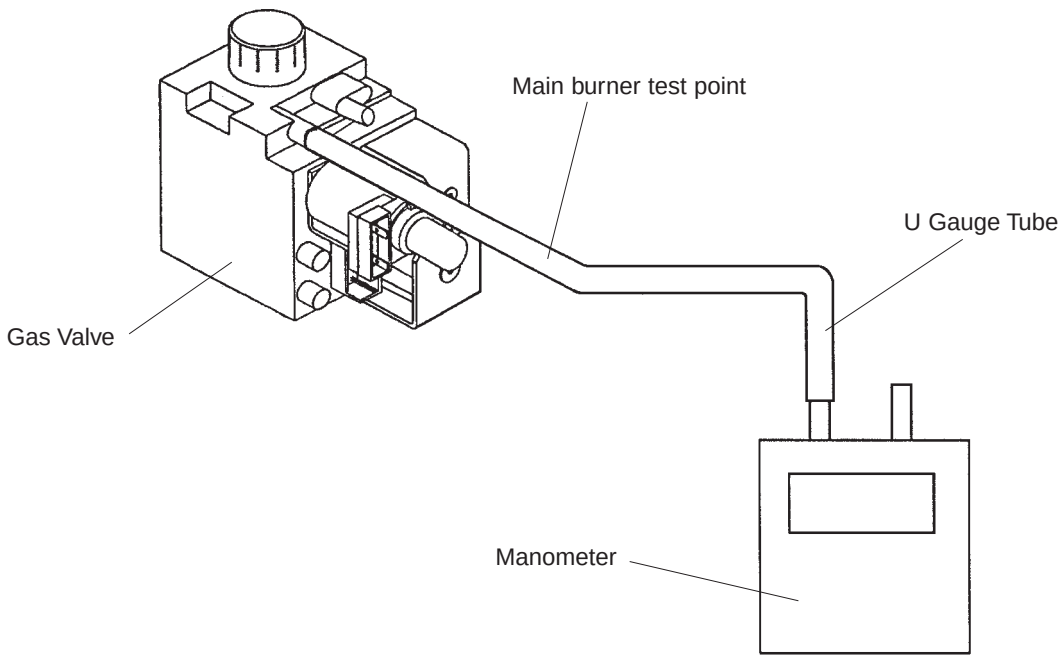

Fig. 23

6.7.8 Setting the Maximum Rate for Central Heating

The maximum heat input for the central heating mode is not adjustable.

6.8 Checking the Flue System

6.8.1 The flue system should be visually checked for soundness. Check all clamps and fixings are secure and tight.

6.9 Checking the Heating Thermistor

6.9.1 Allow the system to warm up and manipulate the c/h control knob to ensure that the burner modulates between 'high' and 'low' and then to 'off' and vice versa (scale range covers approx. 45° - 85°C).

6.10 Regulating the Central Heating System

6.10.1 Fully open all radiator and circuit valves and run the appliance in the central heating mode until heated water is circulating. If conditions are warm, remove any thermostatic valve heads.

6.10.2 If the burner will not light, ensure that water is in fact circulating. See 4.6.3.

6.10.3 Adjust radiator return valves and any branch circuit return valves until the individual return temperatures are correct and are approximately equal.

6.10.4 When all is adjusted, progressively close all radiator valves to ensure that the appliance still operates when flow through the system is limited.

If the burner cuts out prematurely due to lack of water flow through the appliance, the system should be regulated to ensure a flow rate of at least 360 litres/h (78 gals/h). This may mean the addition of a small manual by-pass being fitted to the system if a fully TRV system is used.

6.11 Final Flushing of the Heating System

6.11.1 The system should be flushed in accordance with BS7593:1992. Turn on the boiler for central heating and allow the boiler and system to reach temperature. Turn off the boiler and drain the system whilst hot.

Refill the boiler and heating system as described in 6.3.3.

Although not necessary for correct operation of the boiler an inhibitor may be added at this point. Contact the inhibitor manufacturer for further information concerning application and required dose.

6.11.2 Inspect the system for soundness. Turn the appliance off at the mode selector switch.

6.12 Filling, Testing and Regulating the Domestic Hot Water System

6.12.1 Start with the appliance switched on having completed the procedures described in 6.4 to 6.11.

6.12.2 Open a domestic hot water tap (Preferably the bath tap).

Ensure cold water inlet stopcock is fully open (horizontally to the right) and the dhw control knob is set at maximum.

6.12.3 The flow of water should activate the domestic hot water flow switch (13) and drive the diverting valve (21) to its hot water position thus heating the domestic water flowing through the dhw heat exchanger. At the same time the pump and fan are activated lighting the burner on maximum rate.

6.12.4 If the burner does not light, check that the water flow rate is above the minimum required to operate the domestic hot water flow switch (13) 2.0 litres/min (0.45 gals/min).

6.12.5 The temperature of the water will depend on the rate at which it flows and the amount of energy stored in the primary store.

The temperature of water at the tap can be varied by adjusting the water flow rate at the tap up to the maximum predetermined quantity.The hot water temperature control knob will govern the maximum temperature. When the appliance is being used in hot water mode the temperature indicator indicates the temperature of the hot water leaving the appliance.

6.12.6 It is best to set for the lowest acceptable temperature since the user can gain higher temperatures by restricting flow at the tap.

N.B. If the cold supply is subject to large fluctuations or is above the permitted maximum a suitable pressure/flow regulator should be fitted in the cold water supply to the appliance.

6.12.7 Turn the appliance mode selector switch to the position.

Slowly close the tap to reduce the rate of draw to above the minimum approx. 2.0 litres/min., (0.45 gal/min.) Rotate the dhw control knob to ensure the appliance modulates at its various setting.

6.12.8 Close the draw-off tap still further. The burner should stop when the rate falls below approximately 2.0 litres/min. (0.45 gal/min.), and the primary store temperature is replenished.

6.12.9 The appliance incorporates a hot water preheat facility. The appliance will therefore ignite periodically to maintain heat within the thermal store of the appliance.

6.12.10 Flow Restrictor
The appliance is fitted with a flow rate restrictor that limits the maximum flow rate that can be drawn through the appliance. The restrictor eliminates the need to manually adjust the DHW flow rate. Flow-rate (18 l/min).

6.13 Final Check for Operations
Turn mode selector switch to the OFF/RESET position, disconnect pressure gauge, re-tighten screw. Relight boiler.

6.13.1 Re-check for gas soundness

6.13.2 Re examine heating and hot water systems and cold water supply for water soundness.

6.13.3 Check the appearance of the gas flame to assess adequacy of combustion air supply.

6.13.4 Re-check the flue system for soundness and adequacy of supports.

6.14 Concluding Operations

6.14.1 If external/internal controls have been disconnected and terminals 2 & 3 temporarily linked, remove the link and reconnect the controls circuit. Check the operation of the controls.

6.15 Disconnect filling loop, fit filling loop cap. Leave filling loop in a safe and accessible place.

6.15.1 Reposition the front control panel and fit the front boiler casing panel (fig. 19).

6.16 Supplementary Instructions for Fitting & Removing Optional Time Clock and for Wiring to External Controls.

Section 10 Appendices A and B at the rear of this manual provides full instruction for fitting and wiring the optional built-in time switches and for wiring to external controls.

6.17 Complete details of the boiler, controls, installation and commissioning in the log book supplied with the boiler. This is an important document which must be correctly completed and handed to the user. Failure to install and commission this appliance to the manufacturers instructions may invalidate the warranty.

SECTION 7 INSTRUCTING THE USER

7.1 Hand over the copy of the Users Instructions and the boiler log book supplied with the appliance, together with these instructions. Explain how to operate the boiler correctly and how to use the timeclock and room thermostat if fitted.

7.2 Show the user how to switch off the appliance and indicate the position of the electric supply isolator.

7.3 Inform the user of the location of all drain cocks and air vents.

7.4 Explain how to turn the appliance off for both short and long periods and advise on the precautions necessary to prevent damage should the appliance be inoperative when freezing conditions may occur.

7.5 Show the user the filling loop position its function and how to repressurise the system using the filling/inlet valve.

7.6 Finally, advise the user that, for continued safe and efficient operation, the appliance must be serviced by a competent person at least once a year.

SECTION 8 SERVICING INSTRUCTIONS

8.1 General

To ensure the continued safe and efficient operation of the appliance, it is recommended that it is checked and serviced as necessary at regular intervals.

The frequency of servicing will depend upon the particular installation conditions and usage, but in general, once per year should be adequate.

It is the law that any servicing work is carried out by a competent person such as a Vokèra service engineer, approved service agent, British Gas or other CORGI registered personnel.

The following instructions apply to the boiler and its controls, but it should be remembered that the central heating and domestic hot water systems will also require attention from time to time.

When replacing any part or component of this appliance, use genuine Vokera parts only.

8.2 Important Notes

WARNING: Having carried out preliminary flame checks and before starting any servicing work, switch OFF the mains electricity supply and disconnect the plug at the main isolating switch and socket. (If a switch is used remove the fuse.)

Turn off gas supply at the gas service tap fitted to the appliance.

Always test for gas soundness after any service work and after exchanging any gas carrying component.

8.3 Recommended Routine Servicing

8.3.1 Annual Servicing

When servicing is required the following procedures should be carried out.

1. Inspect exterior for signs of damage and deterioration, particularly of flue pipework and electrical connections.

2. Turn off mains electricity and remove front casing (see clause 8.4.).

3. Replace fuse if previously removed (8.2. above) and turn on electricity. Run the boiler for a few minutes in the domestic hot water mode to permit inspection of its operation. This is accomplished by opening a domestic hot water draw off tap and inspecting burner for yellowing of flame tip, flame lift off or sooting.

4. Ensure central heating valves are open. See 6.3.2.2.

Observe pressure gauge reading (fig. 1, 28) which should be approximately 1 bar when the system is cold See 6.3.4

5. Turn off mains electricity and turn off gas service tap on the appliance.

6. Gain general access as described in clause 8.4.

7. Remove main burner (see clause 8.8). Lightly clean with a soft brush and inspect for damage. If during initial inspection any combustion irregularity was suspected, remove injectors and clean or replace.

8. Place cloth below combustion chamber to catch debris. Clean heat exchanger using suitable brushes and rods if necessary.

9. Inspect combustion chamber lining. The insulating material is easily damaged. Do not scrape, but clean off lightly.

If any panels are damaged these should be replaced (see clause 8.7).

10. Replace all parts in reverse order but leave the controls fascia open and outer casing off.

11. Undertake a complete commissioning check as detailed in section 6.

12. Close up control fascia and refix front casing.

13. Clean off casing using soft cloth and dilute detergent.

14. Complete details of service undertaken in the boiler log book.

15. Check the correct operation of the safety valve (the safty valve is designed to open and release excess pressure at 3 bar).

16. Check the expansion vessel charge. The expansion vessel charge. The expansion vessel is charged at 0.8 bar (see 8.20 for the correct procedure).

17. Ensure both flue venturis are clean and free from any debris or obstruction.

18. Ensure the burner, main heat exchanger and latent heat collector are clean and free from any debris or obstruction.

NOTE: there is a flue gas analysis test point incorporated in the flue outlet. (see 8.25.6)

8.3.2 Replacement of Parts

1. The life of individual components varies and they will need servicing as and when faults develop. The fault finding sequence charts in section 9 will serve to locate which component is the cause of any malfunction. Instructions for removal, inspection and replacement of the individual parts are given in the following pages.

2. The domestic hot water heat exchanger may in certain conditions become partially blocked by scale deposits. Evidence of this will be deterioration in performance.

This condition could well be treated using proprietary descalants following makers' instructions without dismantling the appliance by circulating a fluid through the dhw coil. To do this, disconnection from hot and cold services is necessary. Reconnect only after thorough flushing with clean water.

3. Occasional maintenance of mechanical working parts will be necessary (three port valve, flow diaphragm). Service kits are available from your local Vokèra stockists. Vokèra Service Kit No.T0019

8.4 To Gain General Access/Assembly

To remove components access to the interior is essential.
Ensure electricity supply is isolated before carrying out any servicing.

8.4.1 To remove front casing.

Push to release front door panel and lower to reveal controls. Found magnetised on the inside of the door panel will be a small tool.
Using the tool loosen the 2 captive screws securing the front control panel door to the appliance, lift away to reveal the inside of the appliance (fig. 24).

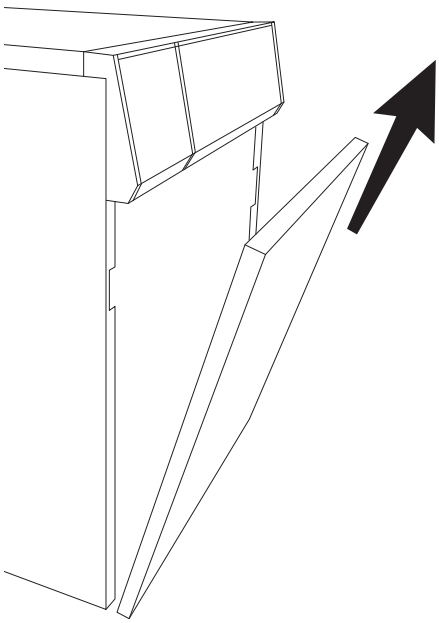

Fig. 24

8.4.2 Reassembly is always carried out in reverse order to dismantling, unless otherwise stated. Electrical connections must be remade in accordance with the wiring diagram (fig. 53).

8.4.3 Where gas control components are replaced, check the burner pressures and adjust if necessary (See 8.25).

8.5 **Room Sealed Chamber Front Cover**
Refer to figs. 25 & 26.

8.5.1 Gain general access as 8.4

8.5.2 Loosen the two screws (A) on the bracket (B) of the expansion vessel (C) (see fig. 25a).

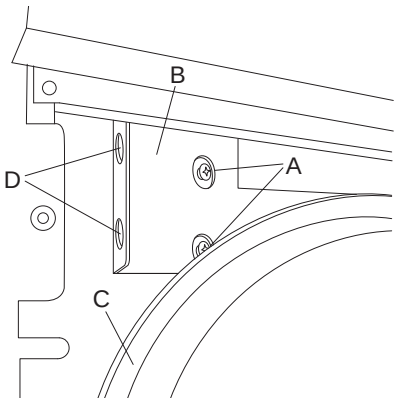

Fig. 25a

8.5.3 Lift the expansion vessel (C) and the bracket (B) so as to remove them (see fig. 25b).

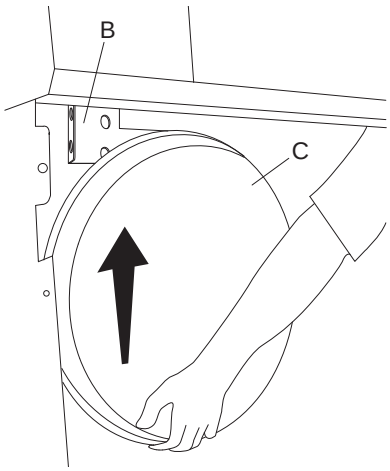

Fig. 25b

8.5.4 Turn the expansion vessel (C) and the bracket (B) 90° clockwise and hook it onto the holes (D) (see fig. 25c).

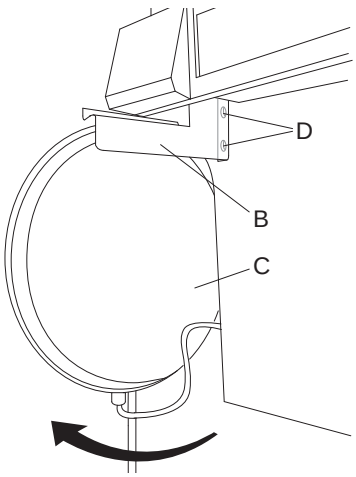

Fig. 25c

8.5.5 Remove top casing (E).
Reposition the front control panel by first pulling it free from 4 locating lugs.
Position the electrical panel (F) on top of the boiler so that it is supported by the two side panels (see fig. 25d).

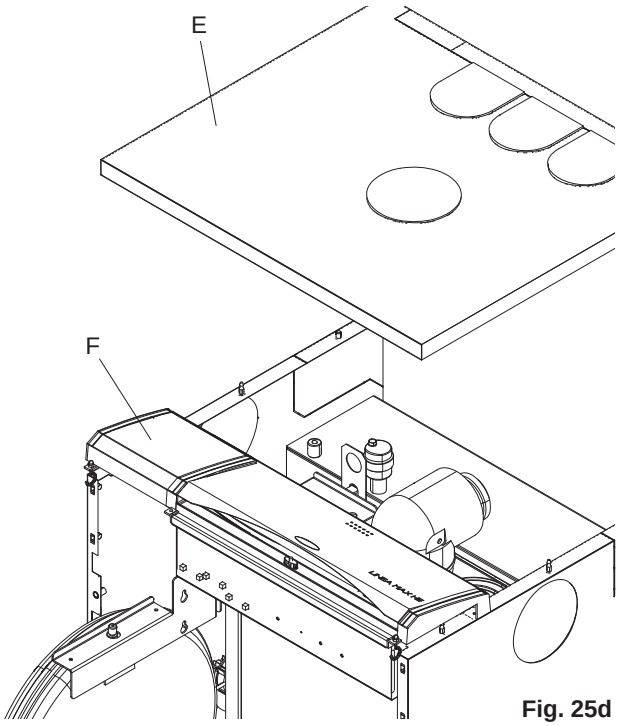

Fig. 25d

8.5.6 Remove room sealed cover plate by releasing two lower retaining clips and easing cover off the top locating hooks. Inspect gasket for damage. If damaged, replace (see fig. 26).

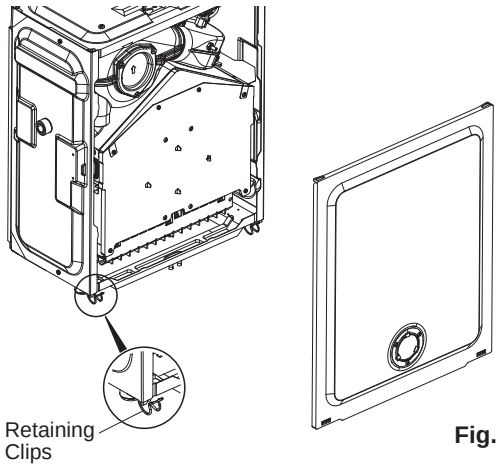

Fig. 26

NOTE: when refitting the combustion chamber front cover it is essential to correctly seat and secure the cover in place ensuring both clips are secured in place.

8.5.7 Replace in the reverse order.

8.6 **Remove front combustion cover**
Refer to fig. 27.

8.6.1 Gain general access as 8.4.

8.6.2 Remove room sealed front cover as 8.5

8.6.3 Locate and remove the 6 screws securing the front combustion cover (1), pull the cover towards you before lifting and disengaging.

8.6.4 Replace in the reverse order.

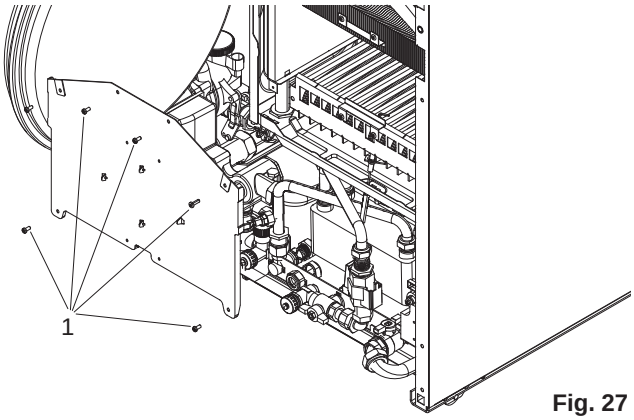

Fig. 27

8.7 **Remove the air chamber right side panel**
Refer to figs. 28

8.7.1 Gain general access as 8.4.

8.7.2 Remove room sealed front cover as 8.5

8.7.3 Remove front combustion cover as 8.6

8.7.4 Remove all the electrical cables from the clamps on the side panels; detach all the electrical connections to the various components and remove the electrical panel.

8.7.5 Identify and remove the 5 screws that fasten the right side panel: 2 at the bottom (1), 2 at the rear (2), and one at the top of the panel (3). The right side panel can now be removed from the boiler (see fig. 28a).

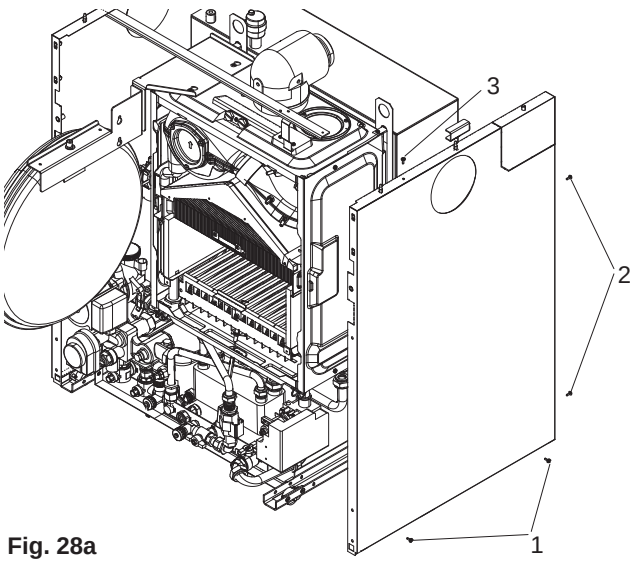

Fig. 28a

8.7.6 Locate and remove the 2 screws (2) securing the air chamber right side panel (1), pull the panel towards you before lifting and disengaging (see fig. 28b).

8.7.7 Replace in the reverse order.
Electrical connections must be remade in accordance with the wiring diagram (fig. 53).

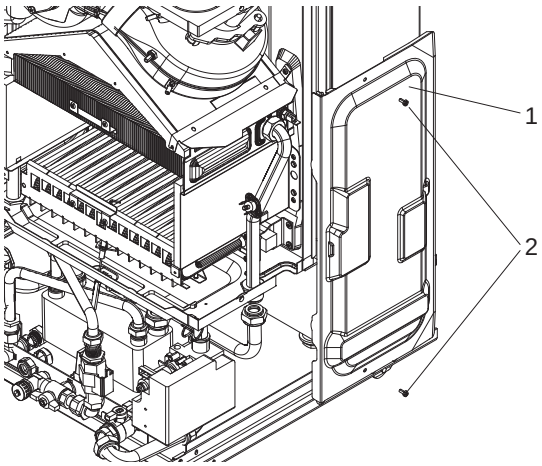

Fig. 28b

8.8 **Electrode, Burner & Injectors**
Refer to figs. 29 & 30.

8.8.1 Gain general access as 8.4.

8.8.2 Remove room sealed front cover as 8.5

8.8.3 Remove front combustion cover as 8.6

8.8.4 Disconnect the electrode lead (1) from the connector.

8.8.5 Ease the electrode sealing grommet from its seating (2).

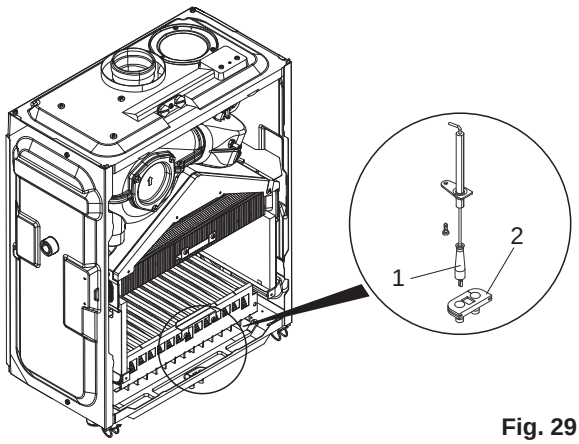

Fig. 29

8.8.6 FIG. 30: locate and remove the four screws which secure the burner in position (1), gently ease the burner out of its location.

8.8.7 Once the burner has been removed, the electroderetaining screw can be removed.

8.8.8 Locate the burner injectors (2) and remove (if necessary).

8.8.9 Replace in the reverse order.

NOTE: Please note, the injector sealing washers (3) must be replaced if the injectors have been removed, ensure all seals are in good condition, taking care to ensure they are replaced correctly. Replace in the reverse order.

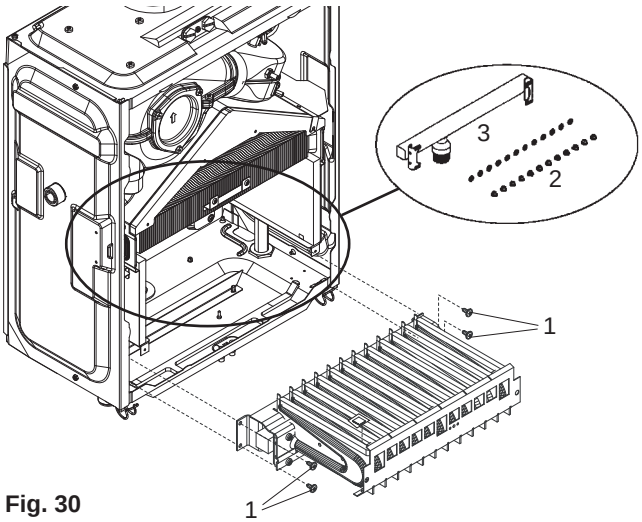

Fig. 30

8.9 **Main Heat Exchanger**
Refer to fig. 31

8.9.1 Gain general access as 8.4.

8.9.2 Remove room sealed front cover as 8.5.

8.9.3 Remove front combustion cover as 8.6.

8.9.4 Remove the air chamber right side panel as 8.7.

8.9.5 Disconnect the flow and return connections (4,5, fig. 31) on the heat exchanger.

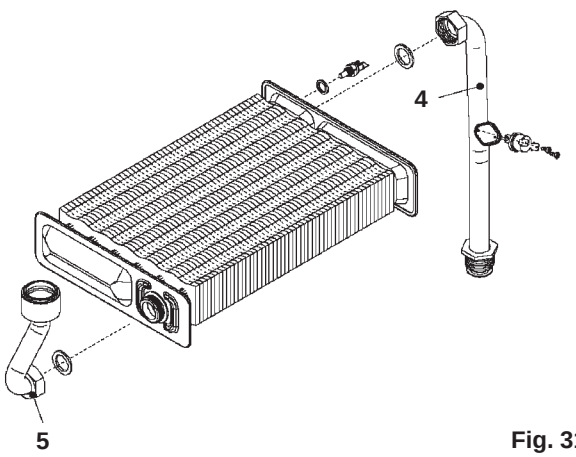

Fig. 31

8.9.6 The heat exchanger can now be withdrawn from the appliance.

8.9.7 Replace in the reverse order.

8.9.8 Ensure all seals are in good condition, taking care to ensure they are replaced correctly.

8.10 **Flue Fan**
Refer to fig. 32

8.10.1 Gain general access as 8.4.

8.10.2 Remove room sealed front cover as 8.5.

8.10.3 Remove front combustion cover as 8.6.

8.10.4 Remove the air chamber right side panel as 8.7.

8.10.5 Disconnect the electrical connections and silicone tubes attached to the fan, noting their positions.

8.10.6 Locate and remove the screws (6) that secure the air pressure switch assembly (4&5).

8.10.7 Locate and remove the screws that secure the flue hood and air baffle, disconnect the flue clip (1) from the fan-flue elbow, and gently ease the fan (3) & flue hood assembly (2) from its location.

8.10.8 Locate and remove the four screws that secure the fan to the flue hood.

8.10.9 Remove the fan to flue elbow.

8.10.10 Replace in the reverse order. Ensure all seals are in good condition, taking care to ensure they are replaced correctly.

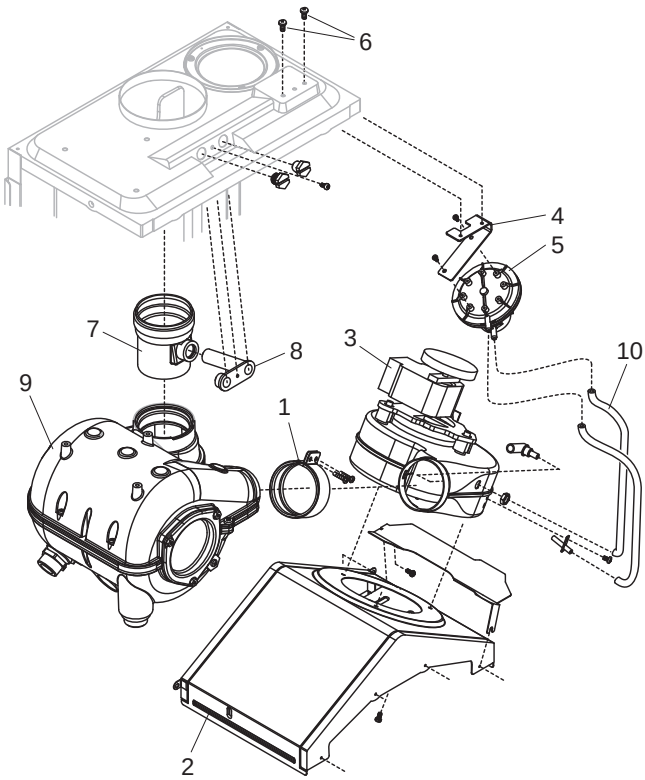

Fig. 32

8.11 Flue Pressure Differential Switch
Refer to fig. 32

8.11.1 Gain general access as 8.4.

8.11.2 Remove room sealed front cover as 8.5.

8.11.3 Remove the air chamber right side panel as 8.7.

8.11.4 Locate and remove the two screws (6) holding the air pressure switch to the air chamber.

8.11.5 Disconnect the electrical connections and silicone tubes (10) attached to the air pressure switch, noting their connections positions.

8.11.6 Replace in the reverse order. Ensure all seals are in good condition, taking care to ensure they are replaced correctly.
See fig. 53 for correct fitting of electrical connections.
When reconnecting the pressure pipes the upper nozzle on the inner flue bend connects to the front nozzle of the pressure differential switch.

.

8.12 Combustion Chamber Insulation Boards
Refer to fig. 33

8.12.1 Gain general access as 8.4.

8.12.2 Remove room sealed front cover as 8.5.

8.12.3 Remove front combustion cover as 8.6.

8.12.4 Remove the air chamber right side panel as 8.7.

8.12.5 Remove Main Heat Exchanger as 8.9.

8.12.6 To remove side combustion chamber insulation boards, gently prise upwards and pull out (1).

8.12.7 To remove rear board, gently prise upwards and pull out.

8.12.8 Fourth panel (front) is replaced complete with combustion chamber front panel.

8.12.9 Replace in the reverse order.

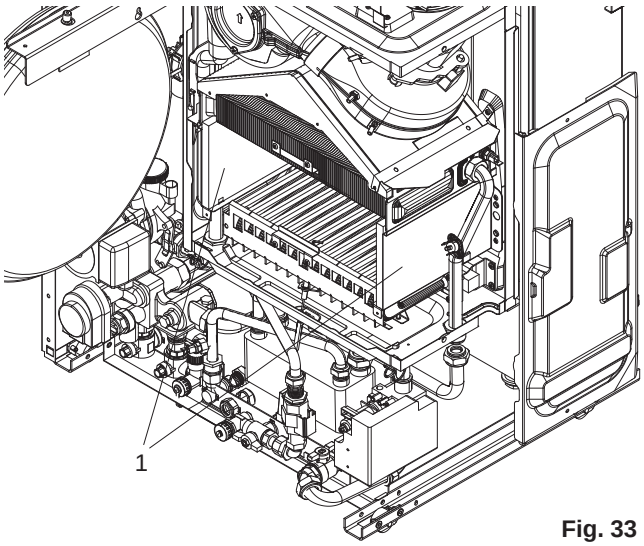

Fig. 33

8.13 Ignition Control Box
Refer to fig. 34

8.13.1 Gain general access as 8.4.

8.13.2 Release 2 screw (1) securing ignition box to gas valve body.

8.13.3 Disconnect electrode lead from ignition box(2).

8.13.4 Disconnect ignition control box from gas valve by sliding out of situ.

8.13.5 Release one screw to release electrical cover plate on ignition control box.

8.13.6 Remove internal electrical plug-in connector by gently pulling and releasing.

8.13.7 Reassemble in reverse order ensuring correct location of electrical plug and electrode lead.

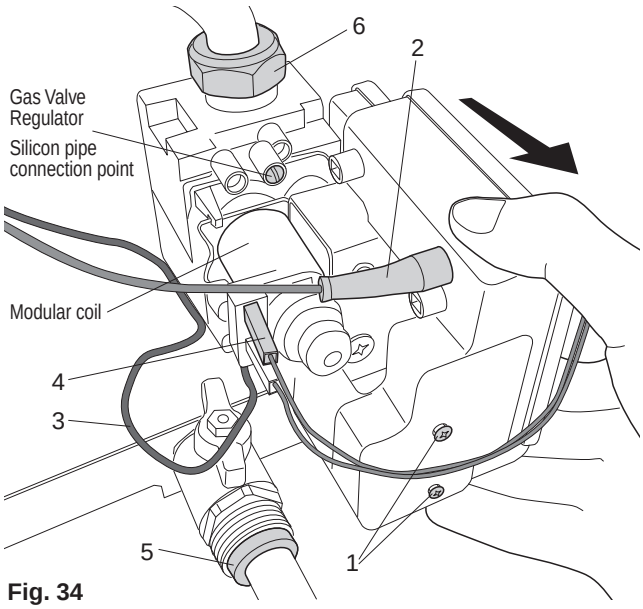

Fig. 34

8.14 Gas Control Valve (complete)
Refer to fig. 34

8.14.1 Gain general access as 8.4.

8.14.2 Turn off gas service tap.

8.14.3 Remove Ignition control box as 8.13

8.14.4 Pull off silicone tube from gas valve regulator.

8.14.5 Disconnect earth leads from gas valve (3).

8.14.6 Disconnect wires from modulator coil (4).

8.14.7 Unscrew gas service tap union & release from its seating (5).

8.14.8 Undo union above the gas control valve (6) & withdraw gas valve.

8.14.9 Undo union from base of gas valve and transfer supply tube to new gas valve.

8.14.10 Reassemble in reverse order.

8.14.11 Test all joints for gas soundness.

8.14.12 Check burner pressures. As 6.7.
If incorrect adjust as instructed in 8.25.

8.15 **Pump**
Refer to fig. 35

8.15.1 Gain general access as 8.4

8.15.2 Turn the 3 butterfly primary store isolation valves to the closed position (handle across valve body) this isolates the primary store thus preventing unnecessary draining.

8.15.3 Close heating flow and return valves (fig.36), by turning ˘ turn until indicating lines are horizontal. Pull lever on head of safety valve to drain primary circuit to boiler.

8.15.4 Place cloth under pump to catch surplus water.

8.15.5 **HEAD ONLY** Unscrew the 4 allen screws around the pump head. Pull head from base of pump and disconnect electrical leads. If replacement required, use the head from a standard 15-60 Grundfos pump.

8.15.6 **COMPLETE PUMP** Disconnect pipe union connection at front left corner of combustion chamber.

8.15.7 Disconnect push fit pipe from pump body by releasing pump securing clip and pulling pipe free from body.

8.15.8 Remove screw from pump securing bracket.

8.15.9 Grasp pump and pull upwards with slight twisting movement to release pump from manifold.

8.15.10 Disconnect electrical leads from pump.

8.15.11 Reassemble in reverse order. Reconnect electrical leads Brown to L, Blue to N and Green to E.

8.16 **Automatic Air Release Valve**
Refer to fig. 35

8.16.1 Gain general access as 8.4

8.16.2 Locate and remove the expansion pipe securing pin and disconnect the expansion pipe from the pump assembly.

8.16.3 Locate and remove the AAV securing pin and lift the AAV free from the pump assembly.

8.16.4 Replace in the reverse order.

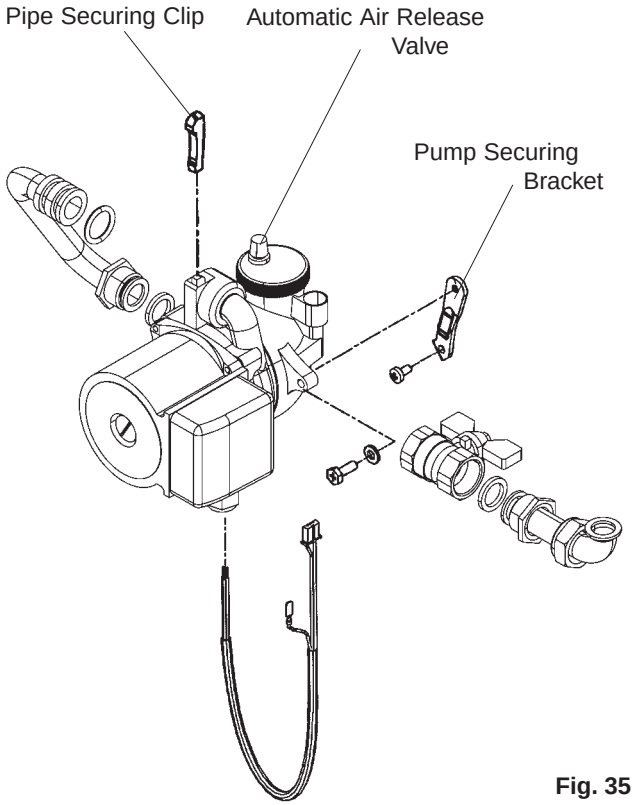

Fig. 35

8.17 **Domestic Flow Switch**
Refer to fig. 36

8.17.1 Gain general access as 8.4.

8.17.2 Place receptacle or an absorbent pad below switch to catch trapped water.

8.17.3 Close cold water inlet stopcock.

8.17.4 Open lowest draw-off or drain tap on hot water system.

8.17.5 Disconnect cold water inlet valve from flow switch by undoing union.

8.17.6 Disconnect union at top of flow switch and two electrical tab connectors.

8.17.7 Reassemble in reverse order.

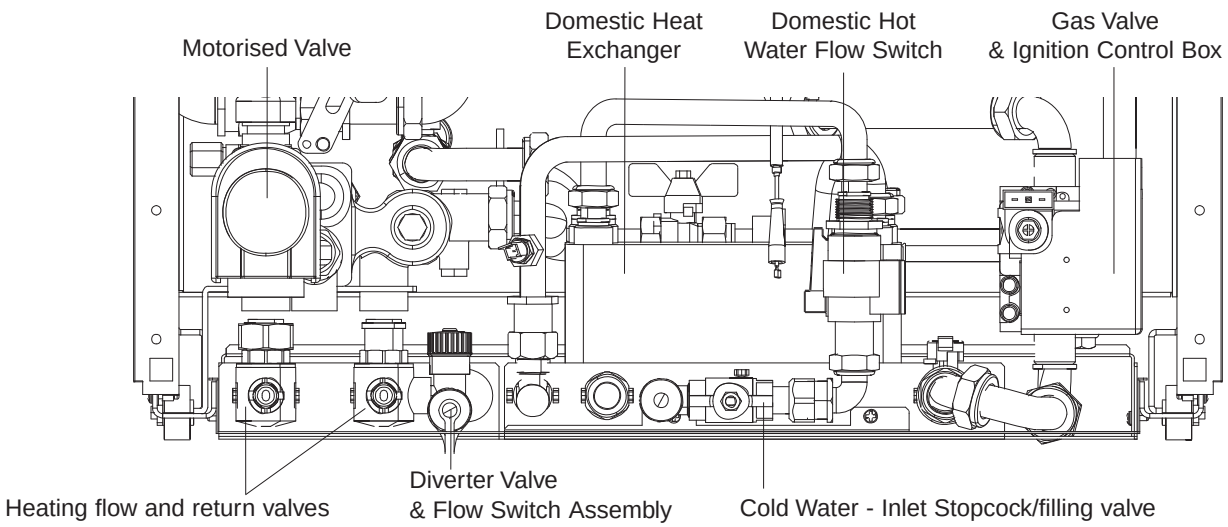

Fig. 36

8.18 **Combined Diverter Valve & Flow Switch Manifold**
Refer to fig. 37

8.18.1 Gain general access as 8.4

8.18.2 Remove Pump as 8.15

8.18.3 Remove motorised valve as 8.23.8.

8.18.4 Release flow microswitch from the hydraulic group by removing one retaining screw on bracket (1).

8.18.5 Disconnect flow tube union and rear union where they connect onto the hydraulic group (2).

8.18.6 Disconnect expansion vessel pipe.

8.18.7 Unscrew pressure gauge connection retaining screw and pull out pressure gauge connection (3).

8.18.8 Disconnect safety valve discharge pipe and heating valve unions.

8.18.9 Remove retaining allen screw securing hydraulic group to frame.

8.18.10 Withdraw hydraulic group from appliance.
See Fig. 40 for further disassembly.

8.18.11 Reassemble in reverse order ensuring that washers are replaced in all union connections.

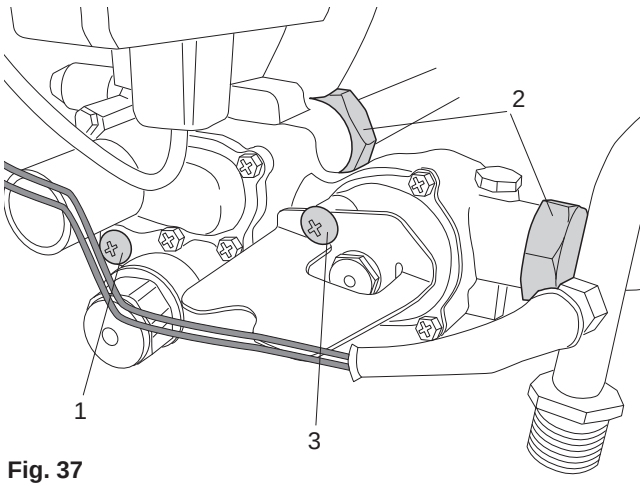

Fig. 37

8.19 **Removal of Domestic Hot Water Heat Exchanger**
Refer to figs. 36 & 38

8.19.1 Gain General access 8.4

8.19.2 Place receptacle or an absorbent pad below heat exchanger to catch trapped water.

8.19.3 Close cold water filling/inlet valve (See fig. 22).

8.19.4 Open lowest draw-off or drain tap on hot water system.

8.19.5 Turn the 3 butterfly primary store isolation valves to the closed position (handle across valve body) this isolates the primary store thus preventing unnecessary draining.

8.19.6 Close heating flow and return valves (fig. 36) by turning ˘ turn until indicating lines are horizontal. Pull lever on head of safety valve to drain primary circuit to boiler.

8.19.7 Undo 4 unions and withdraw heat exchanger (see fig. 38).

8.19.8 Reassemble in reverse order, using new washers if required.

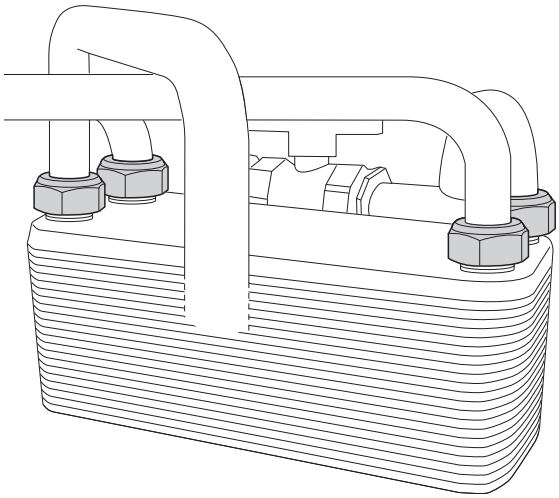

Fig. 38

8.20 **Checking/Replacing Main Expansion Vessel**
Refer to fig. 39

8.20.1 Gain General Access as 8.4

8.20.2 The expansion vessel is factory pressurised 0.8bar (12psig) and should be checked during servicing. Should it have lost pressure it can be repressurised in situ. Turn the 3 butterfly primary store isolation valves to the closed position. Drain the boiler. Fit a suitable pump and gauge (i.e. car foot pump and gauge) to the valve on the side of the expansion vessel, and pressurise to 0.8bar (12psig) and remove the pump. If the vessel cannot be repressurised or if pressure loss is very frequent the expansion vessel will require changing. Alternatively, a new vessel can be fitted in the return to the appliance, and the old vessel isolated in situ.

8.20.3 Switch OFF mains electricity and gain general access. Disconnect electricity supply and wiring for external controls from the appliance (See 5.6).

8.20.4 Turn the 3 butterfly primary store isolation valves to the closed position (handle across valve body) this isolates the primary store thus preventing unnecessary draining.

8.20.5 Close heating flow and return valves (fig. 36) by turning ˘ turn until indicating lines are horizontal. Pull lever on head of safety valve to drain primary circuit to boiler.

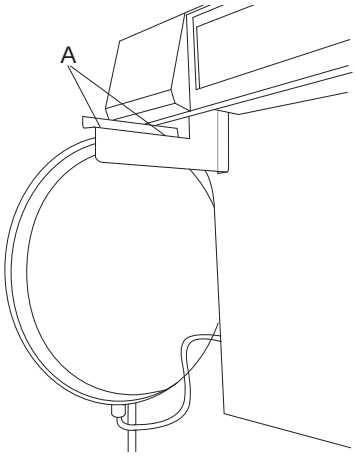

Fig. 39

8.20.6 Disconnect pipe union at the base of the expansion vessel.

8.20.7 Move the expansion vessel as described in point 8.5.

8.20.8 Identify and loosen the screws (A) at the top of the expansion vessel.

8.20.9 Support the expansion vessel and remove the previously loosened screws.

8.20.10 Remove the expansion vessel, making sure not to spill the water contained inside the vessel.

8.20.11 Reassemble in reverse order, using new fibre washer.

8.21 **Diverter Valve**
Refer to fig. 40

8.21.1 Gain general access as 8.4.

8.21.2 Turn the 3 butterfly primary store isolation valves to the closed position (handle across valve body) this isolates the primary store thus preventing unnecessary draining.

8.21.3 Close heating flow and return valves (fig. 6) by turning ˘ turn until indicating lines are horizontal. Pull lever on head of safety valve to drain primary circuit to boiler.

8.21.4 Remove motorised valve (See 8.23.8).

8.21.5 Remove front of diverter valve by unscrewing six retaining bolts.

8.21.6 See Fig. 40 for further disassembly and location of components.

8.21.7 Reassemble in reverse order.

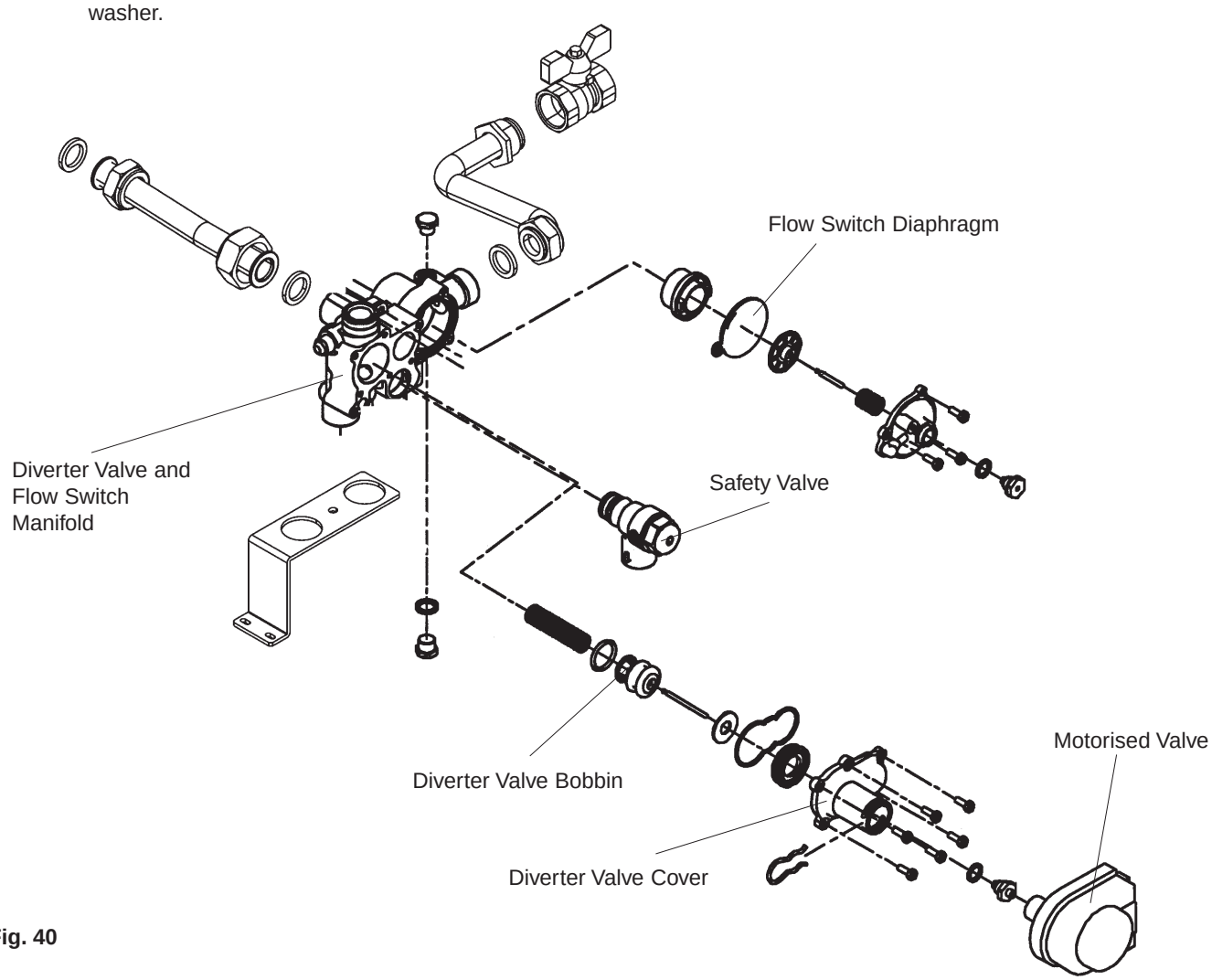

Fig. 40

8.22 **Safety Valve**
Refer to fig. 40

8.22.1 Gain general access as 8.4.

8.22.2 Turn the 3 butterfly primary store isolation valves to the closed position (handle across valve body) this isolates the primary store thus preventing unnecessary draining.

8.22.3 Close heating flow and return valves (fig. 36) by turning ˇ turn until indicating lines are horizontal. Pull lever on head of safety valve to drain primary circuit to boiler.

8.22.4 Disconnect safety valve discharge pipe.

8.22.5 Loosen grub screw at base of safety valve and pull forwards releasing valve from O' ring seal.

8.22.6 Replace in reverse order.

8.23 **Removal of Electrical Components**

8.23.1 Ensure electricity is switched off at main isolator. Gain general access as 8.4 and gain access to the electrical terminals as 5.6.2.

8.23.2 **Flow Microswitch**
Refer to figs. 37 & 40

8.23.3 Gain general access.

8.23.4 Release microswitch from hydraulic group by removing one securing screw.

8.23.5 Remove electrical cover plate by removing 6 screws.

8.23.6 Trace the electrical wires back to where they connect into the plug on the circuit board. Release the plug from the circuit board and remove wires by inserting a small screwdriver or spike into the lower part of the plug releasing the retaining lug.

8.23.7 Reassemble in reverse order ensuring correct location of electrical connections (see fig. 53 for electrical connections).

8.23.8 **Motorised Valve**
Refer to fig. 40

8.23.9 Gain general access as 8.4

8.23.10 Release motorised valve by removing retaining clip.

8.23.11 Remove electrical plug in connector.

8.23.12 Reassemble in reverse order.

8.23.13 **Printed Circuit Board**
Refer to fig. 41

8.23.14 Gain general access as 8.4 and gain access to the electrical terminals as 5.6.2.

8.23.15 Remove electrical cover plate by removing 6 screws.

8.23.16 Pull out 9 multi plug connectors and one earth lead from the printed circuit board.

8.23.17 Remove 2 screws securing circuit board to front panel and remove board.

8.23.18 Reassemble in reverse order ensuring correct location of electrical connections (see fig. 53 for electrical connections).

NOTE: It will also be necessary to check/adjust the c/h minimum gas pressure as 8.25.3.

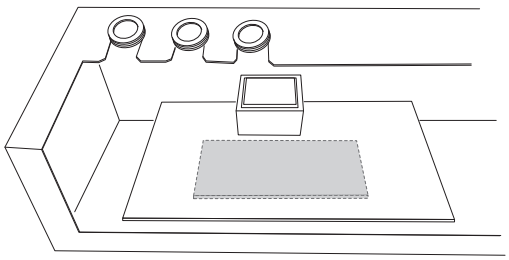

Fig. 41

8.23.19 **Display Printed Circuit Board**

8.23.20 Remove printed circuit board as 8.23.13 to 8.23.18.

8.23.21 Remove three control knobs from front control panel (pull off).

8.23.22 Remove the two screws securing the circuit board to the front panel.

8.23.23 Pull out two multi-plug connectors.

8.23.24 Replace in reverse order.

8.23.25 **Safety Thermostat**
Refer to fig. 42

8.23.26 Gain general access as 8.4.

8.23.27 Remove room sealed chamber front cover as 8.5

8.23.28 Remove the air chamber right side panel as 8.7

8.23.29 Pull off the two electrical connections on the back of the thermostat.

8.23.30 Release thermostat from flow pipe by unscrewing 2 retaining screws.

8.23.31 Reassemble in reverse order ensuring correct location of electrical connections (see fig. 53 for electrical connections).

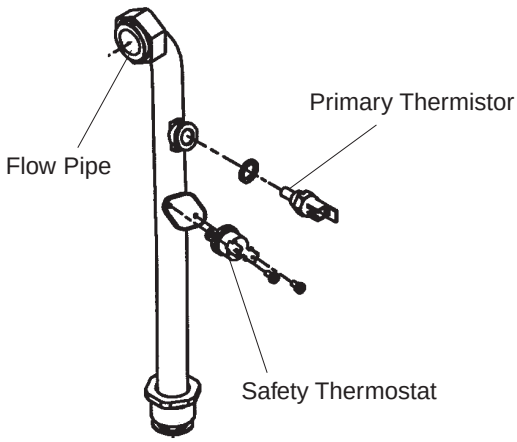

Fig. 42

8.23.32 **Thermistor Sensors**
Refer to fig. 42

8.23.33 Gain general access as 8.4.

8.23.34 Remove room sealed chamber front cover as 8.5

8.23.35 Remove the air chamber right side panel as 8.7

8.23.36 PRIMARY Turn the 3 butterfly primary store isolation valves to the closed position (handle across valve body) this isolates the primary store thus preventing unnecessary draining. Close heating flow and return valves (fig. 6) by turning ˘ turn until indicating lines are horizontal. Pull lever on head of safety valve to drain primary circuit to boiler.

8.23.36b DOMESTIC HOT WATER Close cold water inlet stopcock (fig.6). Open lowest draw-off or drain tap on hot water system.

8.23.37 **Pull off electrical plug connection from thermistor.**

8.23.38 Unscrew thermistor from pocket.

8.23.39 Reassemble in reverse order.

8.23.40 **Primary Store safety Thermostat**
Refer to fig. 43

8.23.41 Remove top casing.

8.23.42 Pull off the plug on the back of the thermostat

8.23.43 Release thermostat from primary store by unscrewing 2 retaining screws.

8.23.44 Reassemble in reverse order.

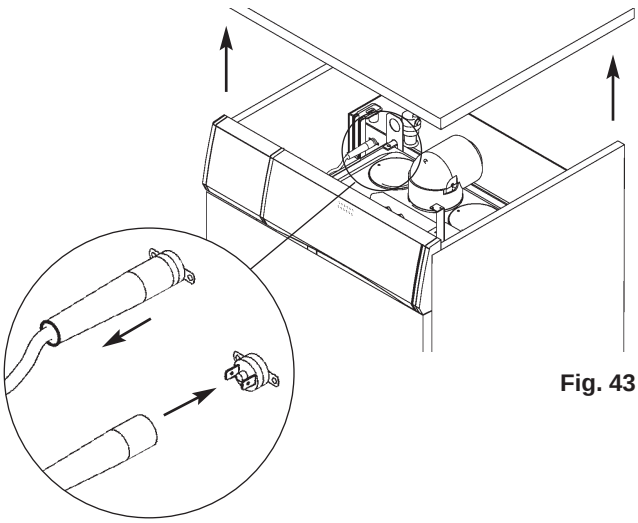

Fig. 43

8.23.45 **Pressure switch**
Refer to fig. 44

8.23.46 Gain general access as 8.4

8.23.47 Identify the pressure switch on the side of the boiler chamber. Remove the connection hose to the drain trap (1). Disconnect the electrical cable (2). Remove the two screws (3) and remove the pressure switch.

8.23.48 Reassemble in reverse order.

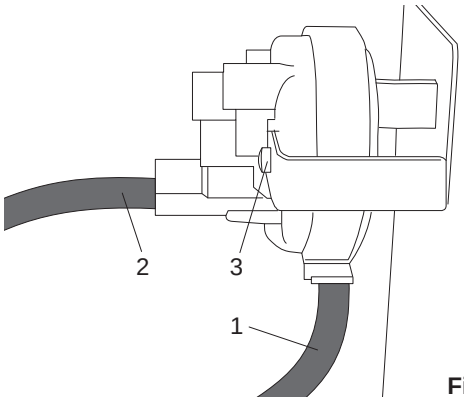

Fig. 44

8.24 **Pressure Gauge**
Refer to fig. 45

8.24.1 Gain general access as 8.4 and gain access to the electrical terminals as 5.6.2.

8.24.2 Turn the 3 butterfly primary store isolation valves to the closed position (handle across valve body) this isolates the primary store thus preventing unnecessary draining.

8.24.3 Close heating flow and return valves (fig.6) by turning ˘ turn until indicating lines are horizontal. Pull lever on head of safety valve to drain primary circuit to boiler.

8.24.4 Remove electrical cover plate by removing 6 screws.

8.24.5 Trace capillary from back of pressure gauge to connecting point on brass manifold.

8.24.6 Unscrew the retaining screw beside the capillary tube entry to the manifold.

8.24.7 Pull out capillary tube from manifold.

8.24.8 Squeeze plastic locking lugs behind fascia and press gauge from aperture.

8.24.9 Reassemble in reverse order following original route for capillary tubes and ensuring locking lugs are located in the grooves.

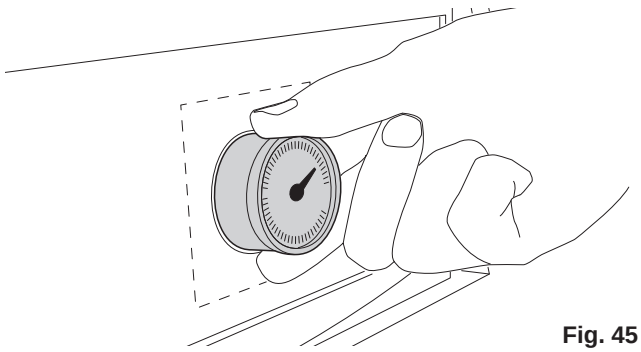

Fig. 45

8.25 Setting Gas Pressures

ALL SETTINGS DONE WITH A SUITABLE MANOMETER CONNECTED TO GAS VALVE AS INSTRUCTED IN 6.7.

8.25.1 Setting Maximum Rate

Turn off electrical supply to boiler. Gain general access as 8.4 and gain access to the electrical terminals as 5.6.2.
Refer to figs. 22 & 46.
Turn on the electricity supply and the appliance mode selector switch to Remove gas pressure adjustment protective cover (fig. 46). Turn on fully a domestic draw off tap.
The boiler will now light at full flame. Screw the outer nut (a) on the end of the modulator coil slowly clockwise until the burner lights.
Adjust the nut until the correct pressure is obtained on the gauge. The correct reading should be:
(N/G)
10.1 mbar.
plus or minus 1.0 mbar.

8.25.2 Setting Minimum Rate (DHW)

Remove one of the grey wires connecting to the modulator coil. The gas pressure will now be at the minimum rate. Turn the inner minimum adjusting screw (b) anti clockwise to decrease the pressure, or clockwise to increase the pressure until the minimum gas pressure is achieved, (ensure when adjusting the inner screw the outer nut (a) is held in position) the correct reading should be:
(N/G)
1.3 mbar.
plus or minus 0.13 mbar.
Replace the grey wire back onto the modulator coil together with the protective cover.

8.25.3 Setting Minimum Rate (C/H)

Turn off the hot water draw off tap.
Remove electrical cover plate by removing 6 screws. (Fig. 20).
Turn the mode selector switch to the position, ensure that the room thermostat and/or timeclock (if fitted) are calling for heat. Turn the heating thermostat to maximum and ensure the appliance ignites.
Identify jumper plug position JP9 on circuit board (fig. 47) and fit a temporary jumper tag (take it from JP4 jumper plug).
Identify minimum adjustment button on pcb (fig. 47).
Press the minimum adjustment button once, the boiler will operate in central heating mode at a minimum gas pressure. An LED on the PCB will flash red to confirm the appliance is in central heating minimum mode.
The gas pressure should now be:
(N/G)
1.6 mbar.
plus or minus 0.16 mbar.
If the reading is incorrect it should be adjusted as follows:
Identify the minimum adjustment potentiometer on the PCB fig. 47.
With the boiler still in central heating mode and the burner at the minimum rate, using a small screwdriver turn the potentiometer clockwise to increase & anti-clockwise to decrease the minimum gas pressure.
When all is adjusted, press the minimum adjustment button once (the appliance will return to normal operation) and remove the temporary jumper connected to plug JP9. Turn the appliance off.

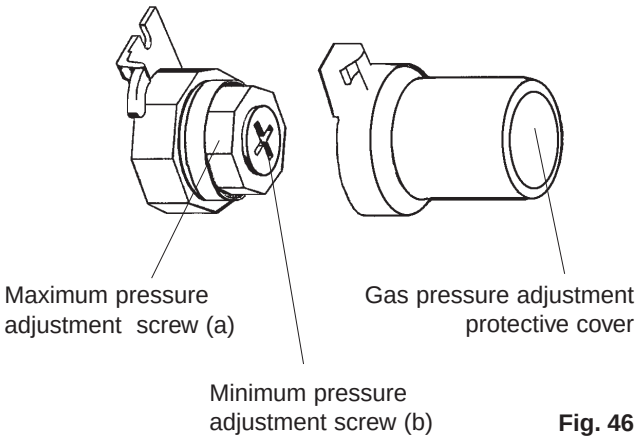

Fig. 46

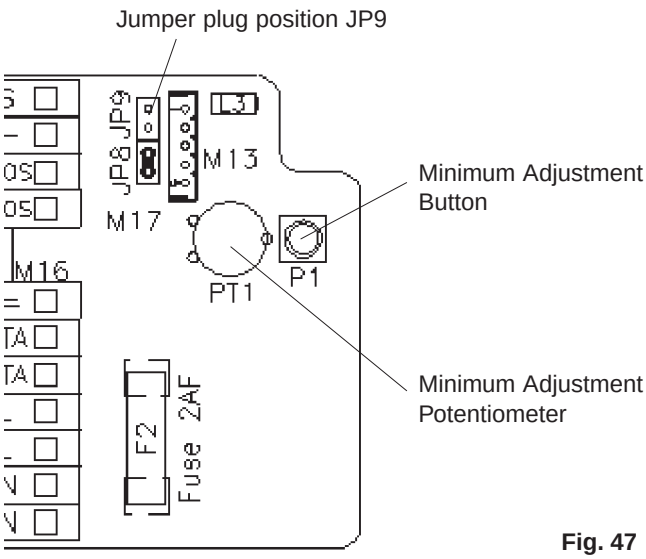

Fig. 47

8.25.4 Soft Light Ignition

The Linea range incorporates a fully automatic soft light ignition sequence which is non adjustable.

When ignition is called for the gas valve is energised and at the same time 20 m/A is applied to the modulator coil for a period of approximately 3 seconds. During this 3 seconds the appliance will ignite. After the initial 3 seconds power to the modulator coil is gradually increased to a maximum power of 120 m/A.

120 m/A is applied to the modulator coil for a further second. If the appliance is operating in hot water mode the maximum heat input will be automatically adjusted depending on the temperature of the appliance.

If the appliance is operating in central heating mode see 8.25.5.

8.25.5 Maximum Rate in Central Heating Mode.

After initial ingnition (8.25.4), the Linea Max range does not require any adjustment to maximum heat requirement of the system load.

Once achieved the appliance will modulate to suit system load.

8.25.6 Combustion Analysis

Incorporated on the appliance is a combustion switch (fig.1, 34). Once the gas pressures have been set activation of the combustion switch automatically fires the appliance at maximum rate in central heating. The appliance will be held at maximum rate until the maximum temperature of the appliance is achieved. The appliance will not modulate during this period.

8.25.6.1 Remove electrical cover plate by removing 6 screws.

8.25.6.2 To use the combustion switch it is important that the gas pressures are set accurately as described in 8.25.1 - 8.25.3.

8.25.6.3 Remove combustion switch cap on front control panel by turning ˘ turn to disengage.

8.25.6.4 Unscrew flue gas analysis test point .Set up flue gas analyser and insert probe into test point.

8.25.6.5 Using a screwdriver lightly press the black toggle behind the combustion switch cap once only. The appliance will light at maximum rate. At this point the digital display will show **CO** to confirm the appliance is in combustion test mode.

8.25.6.6 Analyse flue gasses on analyser.

8.25.6.7 Once the analysis is complete lightly press the black toggle once to disengage the combustion mode. The display will revert to showing appliance temperature on the digital display.

NOTE: The combustion switch can also be used when gas rating the appliance.

8.26 Latent Heat Collector

Refer to figs. 48, 49, 50

8.26.1 Gain general access as 8.4.

8.26.2 Remove the flue hood and fan assembly as detailed in 8.10.

8.26.3 Disconnect and remove the inlet, outlet and condense pipes from the collector.

8.26.4 Unscrew and remove the 3 screws that secure the collector to the air chamber and disconnect the collector from the flue connection.

8.26.5 Replace in the reverse order ensuring all seals are intact and located correctly.

8.26.6 Dismantling the latent heat collector

Apart from routine servicing or maintenance of the retarder and coil, the latent heat collector is a non-serviceable component, therefore, there is no requirement to disassemble the collector.

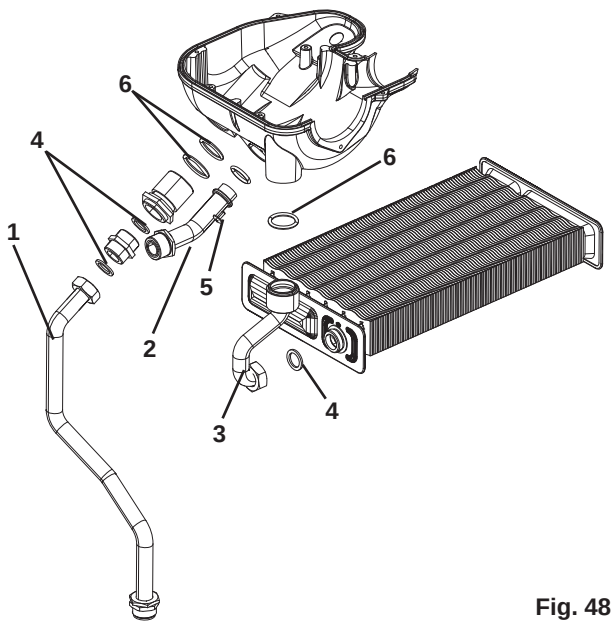

Fig. 48

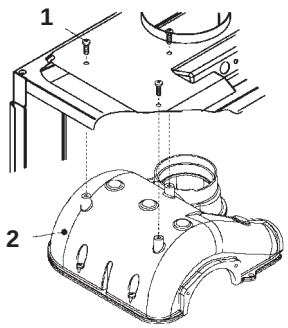

Fig. 49

8.26.7 **Retarder**
Refer to fig. 50

8.26.8 Gain general access as 8.4.

8.26.9 Unclip and remove the air chamber cover, gently pull the cover towards you before lifting and disengaging.

8.26.10 Remove the 3-screws that secure the sealing plate and prise the plate and sealing ring from the latent heat collector.

8.26.11 The retarder can now be removed allowing access to the heat collector coil.

8.26.12 Replace in the reverse order ensuring all seals are intact and correctly located.

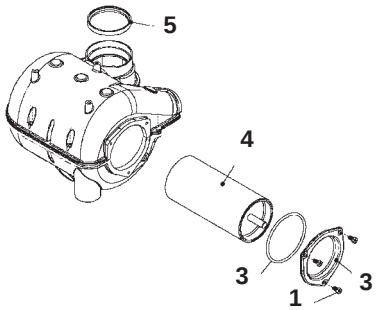

Fig. 50

8.27 **Cleaning the drain trap and the condensate drain**
Refer to fig. 51

8.27.1 Gain general access as 8.4.

8.27.2 Identify the condensate drain trap (1)

8.27.3 Remove the safety pin (2), remove the corrugated condensate drain hose, remove the drain trap and dismantle it using the two screw caps (3).

8.27.4 Remove the float (4) and clean all the components.

8.27.5 Once the cleaning operations have been completed, reassemble the components in the reverse order.

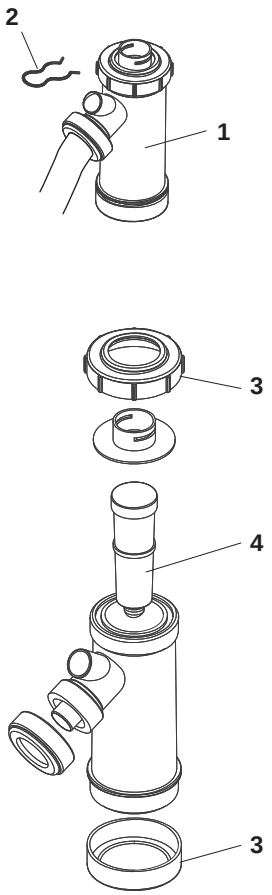

Fig. 51

9.1 On completion of any service/fault finding task which has required the breaking and remaking of electrical connections, the checks Earth Continuity, polarity and Resistance to Earth must be repeated.

The following flow diagrams suggest the logical sequence of steps for fault finding.

They are not exhaustive but cover all that can reasonably be carried out on site by the installer.

Acquaintance with the functional sequence will prove helpful for some, and this is included for reference. As further help, the role of each part is briefly described.

Also included in this section are wiring diagrams and schematics to assist in fault location and servicing as described in the text.

9.2 Sequence of Functions

When following this sequence, refer to fig 53. It is assumed that the mode selector switch is in the position.

9.2.1 **Rest** (No demand for central heating or hot water)

With no demand for heating or hot water the appliance will periodically light to preheat the thermal store. (This operation takes place approx. once every 3 hours if there has been no demand for hot water). This is done to ensure that when a demand is made for domestic hot water the appliance is not cold, thereby reducing the wait for hot water, and energy is present in the store for better hot water production.

Once every 19 hours the appliance will automatically activate and deactivate the pump and motorised valve (provided the electrical supply is on to the appliance). This will help prevent these components becoming stuck if the appliance is not used for long periods.

The temperature indicator will always display the temperature of the boiler unless domestic hot water is drawn where it will indicate the temperature of the hot water leaving the appliance.

9.2.2 Domestic Hot Water Mode

Turning on a tap will cause the domestic hot water flow switch to activate.

Activation of the domestic hot water flow switch operates the motorised valve. Operation of the motorised valve mechanically diverts the primary water to the thermal store and domestic heat exchanger. The pump is started simultaneously and with sufficient primary water circulation around the appliance the flow switch is operated. Once the flow switch has activated the fan starts which results in a changeover of the pressure differential switch. Once these actions have been proven a slow ignition sequence is enabled, whereby the current supplied to the gas valve modulating coil is progressively increased from minimum to maximum over a period of 8-seconds. During this period the ignition electrode sparks continuously even if the burner has ignited.

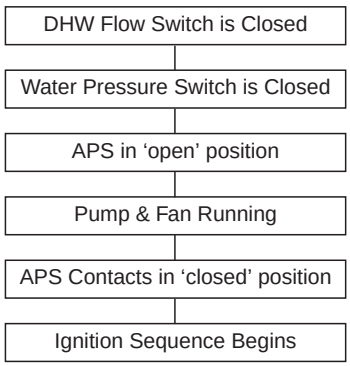

If a flame is detected during the ignition attempt time (8-12 seconds) the sparking will cease, the gas valve will remain energised and the appliance will produce hot water as described below.

If a flame is not detected the appliance will go to lockout (failure to detect a flame during ignition attempt time). The gas valve will be de-energised and the sparking will stop. (See self diagnostic error codes)

To reset the appliance after lockout turn the mode selector switch to the reset position for approximately 10 seconds then back to original position.

The temperature rise of primary water and domestic hot water in the appliance is sensed by thermistors on the flow tube and hot water outlet. An increase in temperature will in turn decrease the voltage reaching the modulator coil, causing the gas rate to be lowered.
If the temperature continues to rise and exceeds the set-point by 5 °C, the burner will shut down until the temperature drops to set-point + 4 °C, whereby a new ignition sequence will be enabled. Conversely a fall in temperature of the primary and domestic hot water will increase the low voltage to the modulator coil and this in turn increases the gas rate accordingly.

Temperature of the domestic hot water leaving the appliance is shown at the temperature indicator whenever hot water is drawn.

Constant monitoring of the temperature of the primary and domestic hot water by the thermistors will regulate the gas rate to maintain an average heat input.

NOTE 1: As the thermistor senses the temperature of the primary water leaving the main heat exchanger, the amount of heat transferred from the primary water to the dhw water depends upon the temperature differential between them.

NOTE 2: With maximum thermal storage temperature, the temperature rise to the hot water will depend upon the flow rate and length of use. It is possible to use all the energy within the thermal store therefore the maximum hot water performance will reduce to 28kW output (11.4l/min at 36°C rise).

DHW PARAMETERS

RANGE	MINIMUM	MAXIMUM
Temperature (°C)	37,5	60
DHW NTC fault	ON at 50 °C	OFF at 55 °C

When the dhw water draw off rate drops below the permitted minimum (2.0 l/min) the domestic hot water flow switch is deactivated, and the appliance either reverts to the 'Rest' mode where the fan may overrun to remove residual heat, or the appliance will continue to operate to replenish heat within the thermal store, or if there is a call for heating to the mode described.

9.2.3 Central Heating Mode

In this mode the mode selector switch must be turned to the position.

With all controls calling for heat the motorised valve returns, mechanically diverting primary water to the central heating circuit. The pump will run and provided sufficient primary water is circulating the flow switch is activated.

The fan will run and the pressure differential switch will be activated. This in turn will energise the electronic ignition control box.

A slow ignition sequence is enabled, whereby the current supplied to the gas valve modulating coil is progressively increased from minimum to maximum over a period of 8-seconds. During this period the ignition electrode sparks continuously even if the burner has ignited.

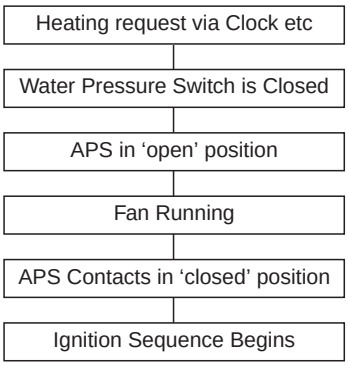

If a flame is detected during the ignition attempt period, (8-12 seconds) the sparking will cease and the gas valve will remain energised.

The temperature rise of the primary water is sensed by the thermistor on the flow pipe.

As the temperature of the primary water approaches that set on the c/h temperature control, the voltage to the modulator coil will decrease and thus lower the gas rate.

If the temperature continues to rise and exceeds the set-point by 6 °C, the burner will shut down.

The appliance has an inbuilt delay timer and re-ignition will not be attempted for approximately 3 minutes.

A new ignition sequence will be enabled when the 3-minute anti-cycle has been performed and the temperature at the primary thermistor has dropped 6 °C below the set-point.

Conversely a fall in temperature of the primary water will increase the voltage to the modulator coil therefore increase the gas rate. Constant monitoring of the temperature of the primary water by the thermistor will regulate the gas rate to maintain an average heat input.

When the appliance has reached the set temperature and the burner is off, the pump will continue to run to circulate the primary water around the c/h system.

Temperature of the central heating is shown at the temperature indicator whenever the central heating is on.

If supply to the appliance is broken (e.g. by a room thermostat or timeclock) the burner is extinguished the pump stops, the motorised valve is energised into the hot water mode waiting for preheat or demand for hot water. However, the fan will continue to run until the primary water temperature is below 80°C.

Should there be a restriction in the heating circuit reducing the flow rate to below 360 l/hour (1.28 gpm) the flow switch could deactivate and de-energise the gas valve.

IMPORTANT:

The timer delay can be de-activated by the insertion of a ‘jumper’ on the PCB at JP1 or by isolating the appliance from the electrical supply for 30 seconds. Any DHW requests will always have priority over a heating request. When the request for heating has been satisfied, the appliance pump and fan may continue tocirculate to dissipate any residual heat within the appliance

Self Diagnostic Error Codes

The temperature indicator also serves as an error code indicator. Should an error occur the status LED (which is normally green) will flash red. This will be accompanied by the temperature indicator flashing an error code of **01 - 08**.

Check code and proceed as follows:

01: Failure to ignite (see 6.6.5). To re-set turn mode selector switch to re-set position for approximately 10 seconds, then back to original position.

02: Overheat - Normally associated with either poor or lack of primary water circulation. Wait for appliance to cool then re-set as described for code 01.

03: Problem with fan/flue. Re-set as described for code 01.

04: Insufficient water pressure or poor flow in system. Alternatively, problem in the condensate drain trap.
This is a temporary alarm, and does not need to be reset manually, as the alarm will be reset automatically when normal operating conditions resume.

05: Re-set as described for code 01.

06: Hot water thermistor open circuit.

07: Primary thermistor open circuit.

08: Re-set as described for code 01.

IMPORTANT:
The lock of Primary Store Safety Thermostat interrupts the boiler's supply circuit (status LED off, temperature indicator off).
Before releasing the thermostat, wait for appliance to cool sufficently (approximately 15 min) and then:

- turn off the mains electricity supply
- remove top casing (see fig. 52)
- pull off the plug (see fig. 52a)
- reset the Primary Safety Thermostat pushing the button
- reassemble in reverse order.

Should the appliances continue to lock out call service engineer.

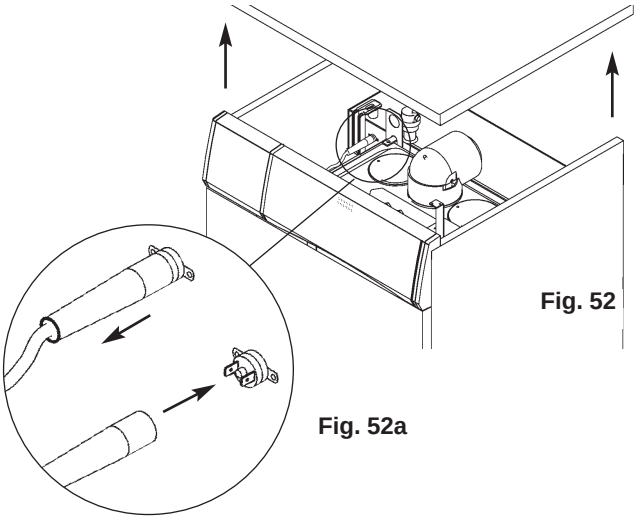

Fig. 52

Fig. 52a

FAULT FINDING GUIDES

On the following pages are the fault finding guides. Be sure to read the notes below before begining any fault finding.

NOTES:

1. To ensure correct fault diagnosis it is important that these guides are carried out in the set order.

2. Check the electrical supply polarity is correct before carrying out fault finding (lockout will occur if the polarity is reversed).

3. To ensure that internal/external controls (if fitted) do not interfere with fault finding, disconnect the wires from terminals 2 & 3 (labelling them in the process to ensure correct reconnection) and provide a solid link between 2 & 3.

VOKERA
Linea Max
Test A: Checking operation of electronic control board at start up

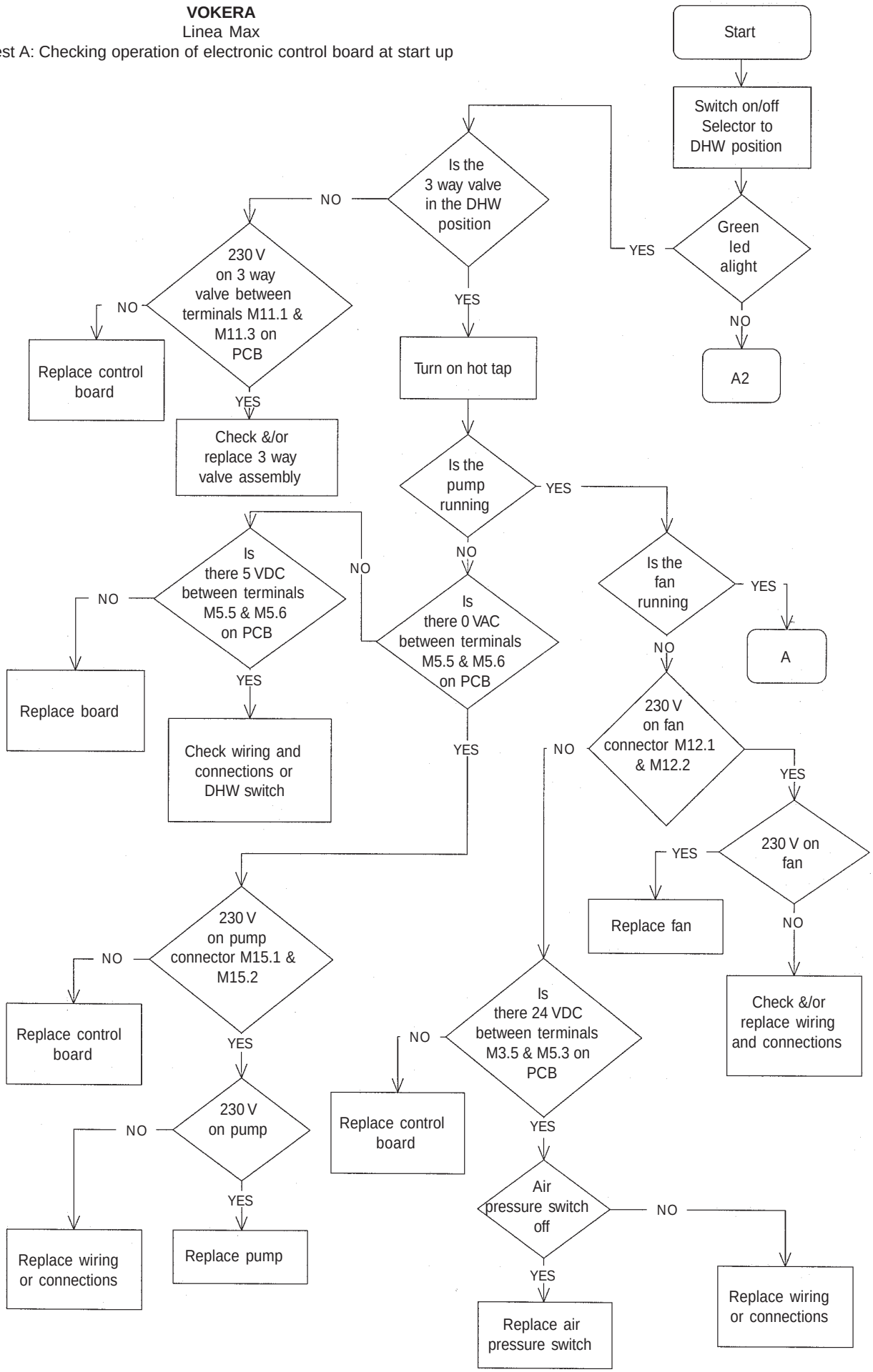

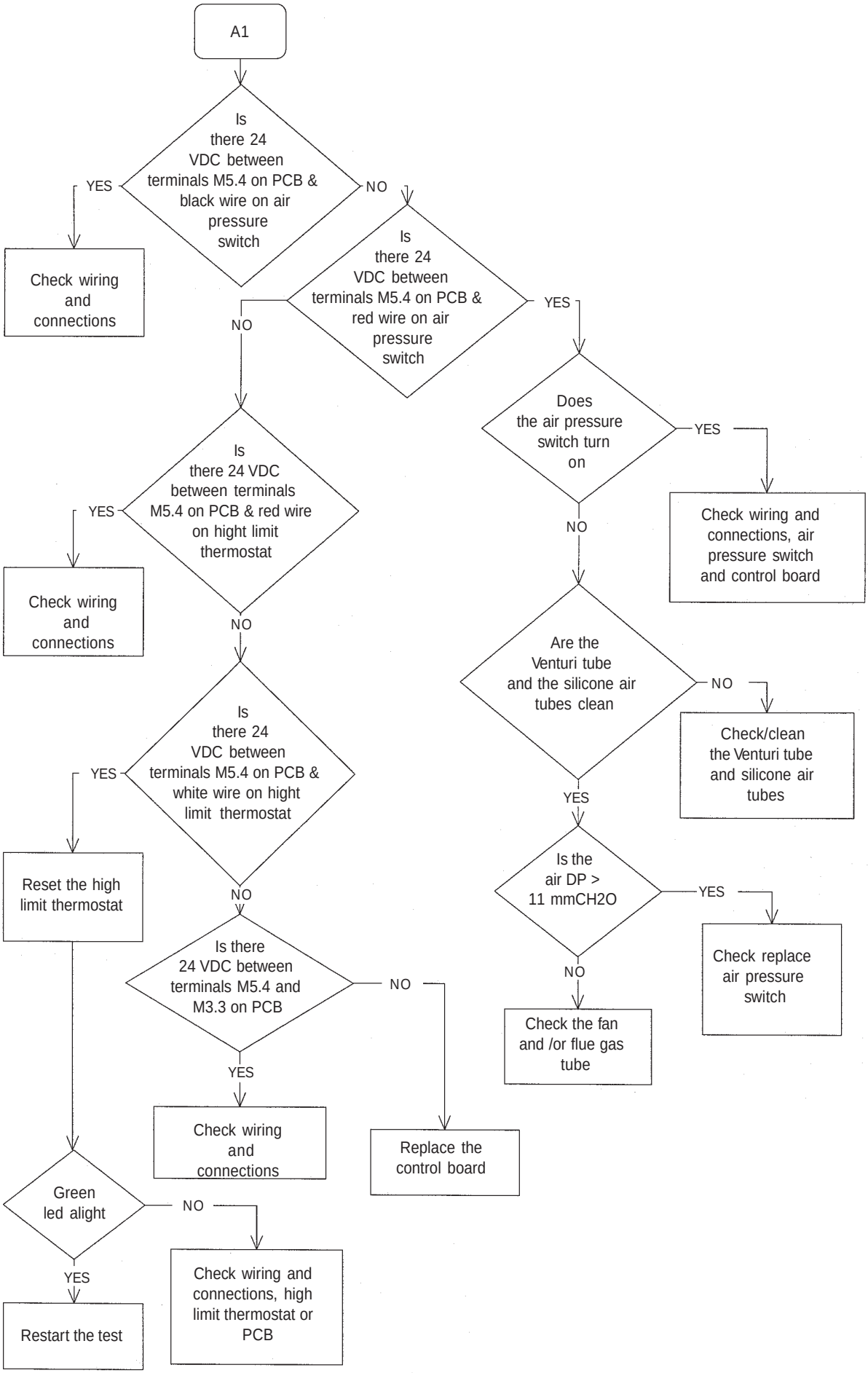
A1
Is there 24 VDC between terminals M5.4 on PCB & black wire on air pressure switch
YES
Check wiring and connections
NO
Is there 24 VDC between terminals M5.4 on PCB & red wire on air pressure switch
YES
Does the air pressure switch turn on
YES
Check wiring and connections, air pressure switch and control board
NO
Are the Venturi tube and the silicone air tubes clean
NO
Check/clean the Venturi tube and silicone air tubes
YES
Is the air DP > 11 mmCH2O
YES
Check replace air pressure switch
NO
Check the fan and /or flue gas tube
NO
Is there 24 VDC between terminals M5.4 on PCB & red wire on hight limit thermostat
YES
Check wiring and connections
NO
Is there 24 VDC between terminals M5.4 on PCB & white wire on hight limit thermostat
YES
Reset the high limit thermostat
NO
Is there 24 VDC between terminals M5.4 and M3.3 on PCB
NO
Replace the control board
YES
Check wiring and connections
Green led alight
NO
Check wiring and connections, high limit thermostat or PCB
YES
Restart the test

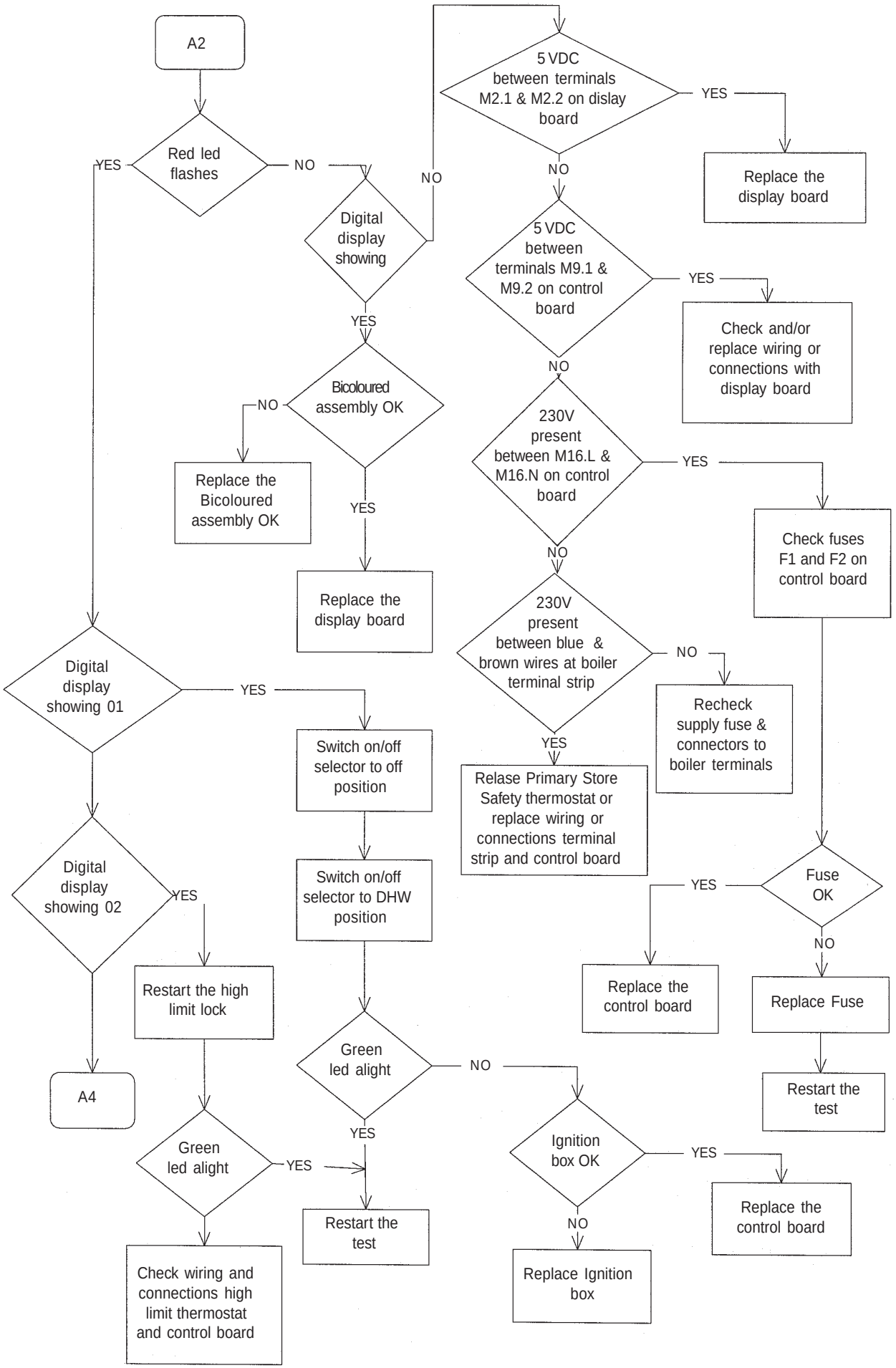
A2
Red led flashes
YES
NO
Digital display showing
NO
YES
Bicoloured assembly OK
NO
Replace the Bicoloured assembly OK
YES
Replace the display board
5 VDC between terminals M2.1 & M2.2 on dislay board
YES
Replace the display board
NO
5 VDC between terminals M9.1 & M9.2 on control board
YES
Check and/or replace wiring or connections with display board
NO
230V present between M16.L & M16.N on control board
YES
Check fuses F1 and F2 on control board
NO
230V present between blue & brown wires at boiler terminal strip
NO
Recheck supply fuse & connectors to boiler terminals
YES
Relase Primary Store Safety thermostat or replace wiring or connections terminal strip and control board
Digital display showing 01
YES
Switch on/off selector to off position
Switch on/off selector to DHW position
Digital display showing 02
YES
Restart the high limit lock
A4
Green led alight
YES
Check wiring and connections high limit thermostat and control board
Green led alight
NO
YES
Restart the test
Ignition box OK
YES
Replace the control board
NO
Replace Ignition box
Fuse OK
YES
Replace the control board
NO
Replace Fuse
Restart the test

VOKERA
Linea Max
Test B: Check control in DHW mode

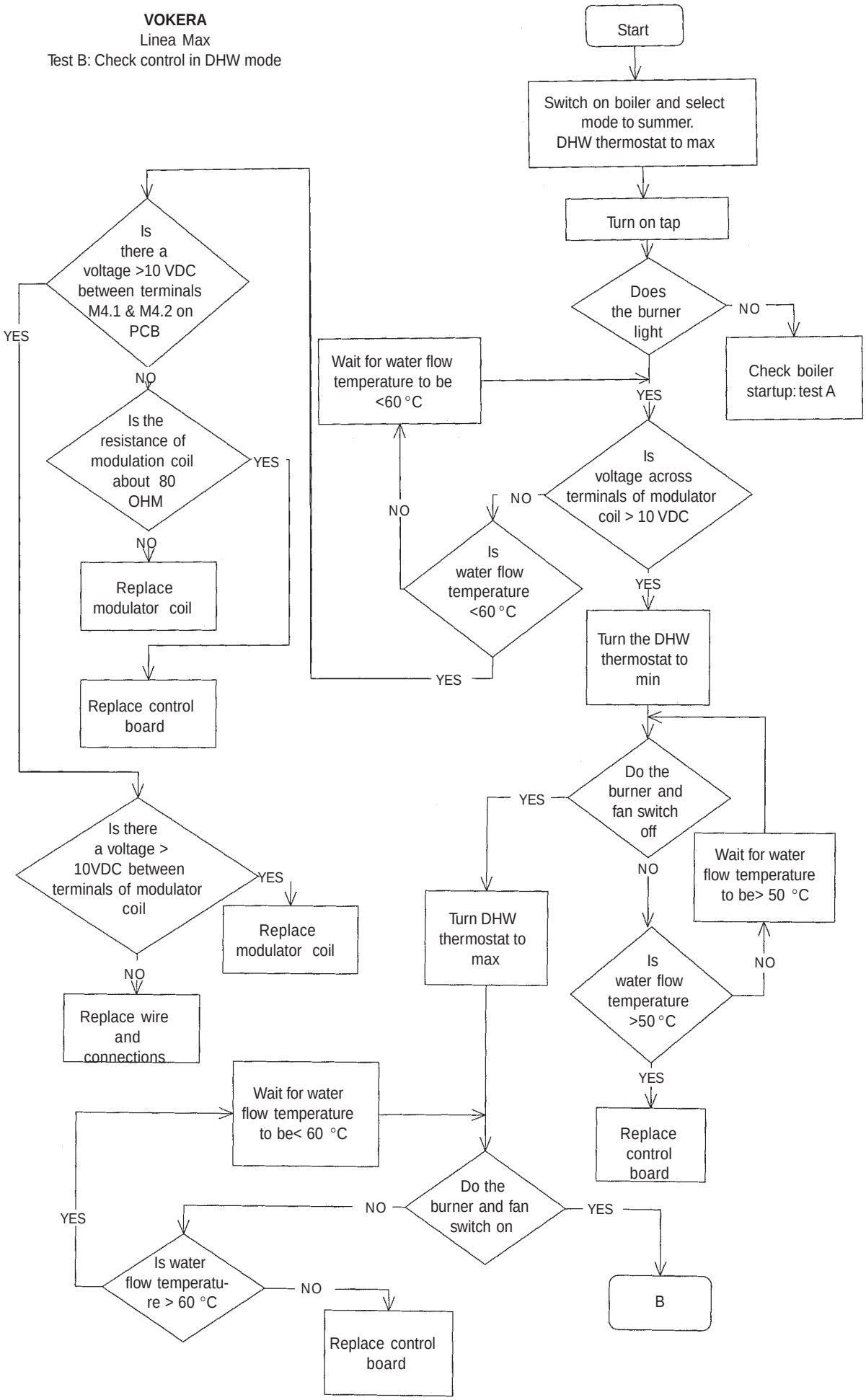

VOKERA
Linea Max
Test C: Check control in C/H mode

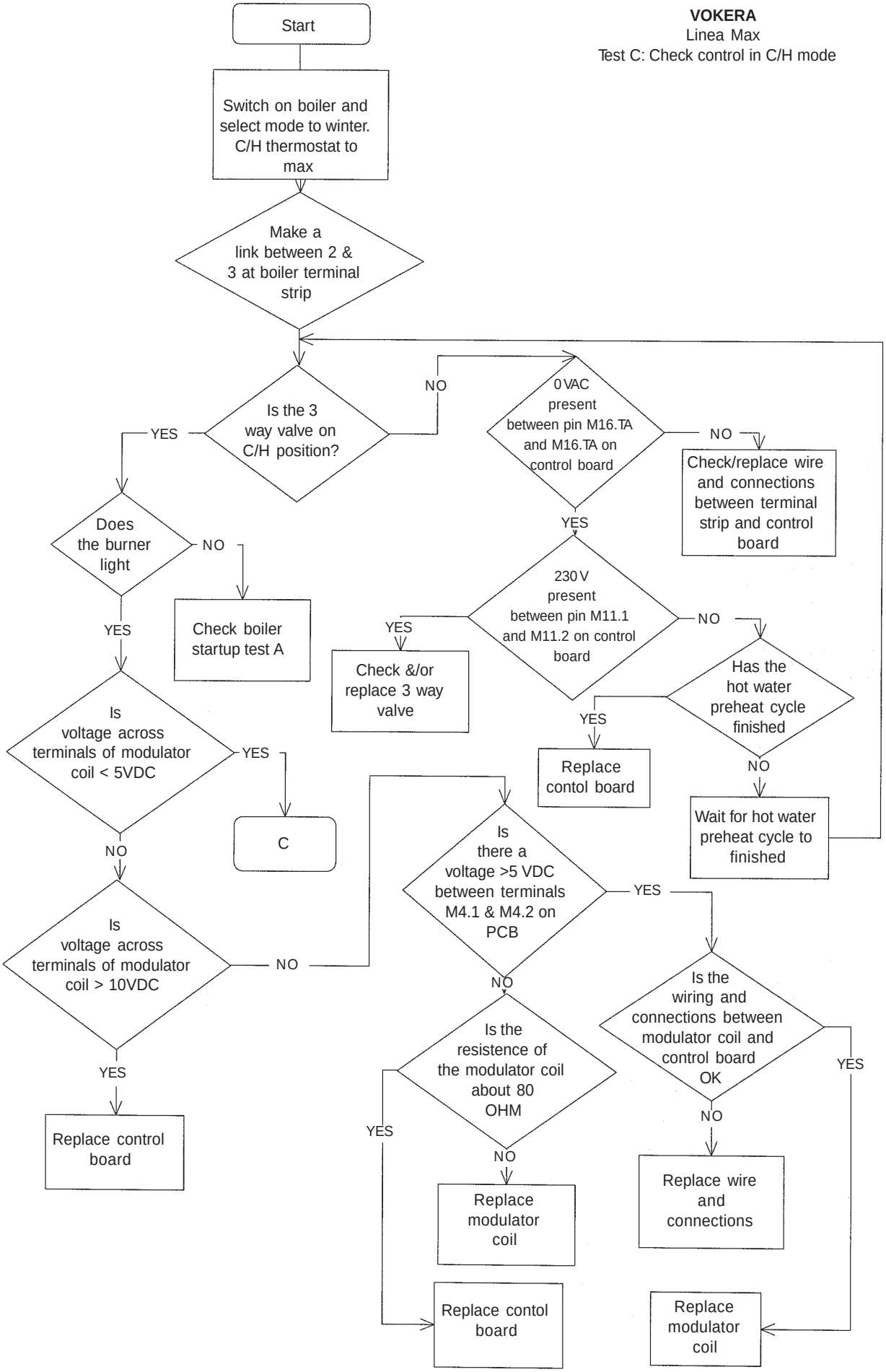

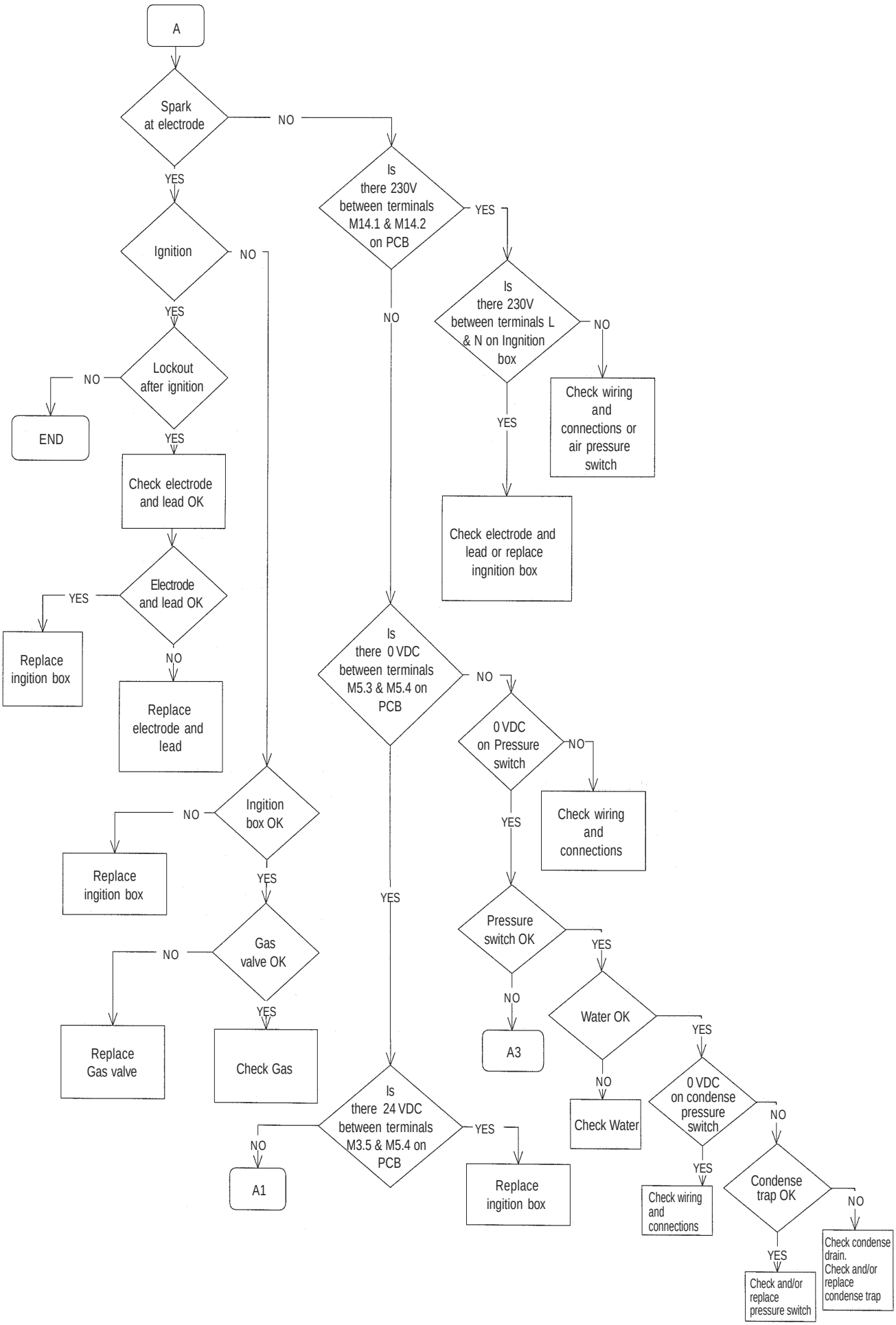
A
Spark at electrode
NO
YES
Ignition
NO
YES
Lockout after ignition
NO
END
YES
Check electrode and lead OK
Electrode and lead OK
YES
Replace ingition box
NO
Replace electrode and lead
Ingition box OK
NO
Replace ingition box
YES
Gas valve OK
NO
Replace Gas valve
YES
Check Gas
Is there 230V between terminals M14.1 & M14.2 on PCB
YES
Is there 230V between terminals L & N on Ingnition box
NO
Check wiring and connections or air pressure switch
YES
Check electrode and lead or replace ingnition box
NO
Is there 0 VDC between terminals M5.3 & M5.4 on PCB
NO
0 VDC on Pressure switch
NO
Check wiring and connections
YES
Pressure switch OK
YES
Water OK
YES
0 VDC on condense pressure switch
NO
Condense trap OK
NO
Check condense drain. Check and/or replace condense trap
YES
Check and/or replace pressure switch
YES
Check wiring and connections
NO
Check Water
NO
A3
YES
Is there 24 VDC between terminals M3.5 & M5.4 on PCB
NO
A1
YES
Replace ingition box

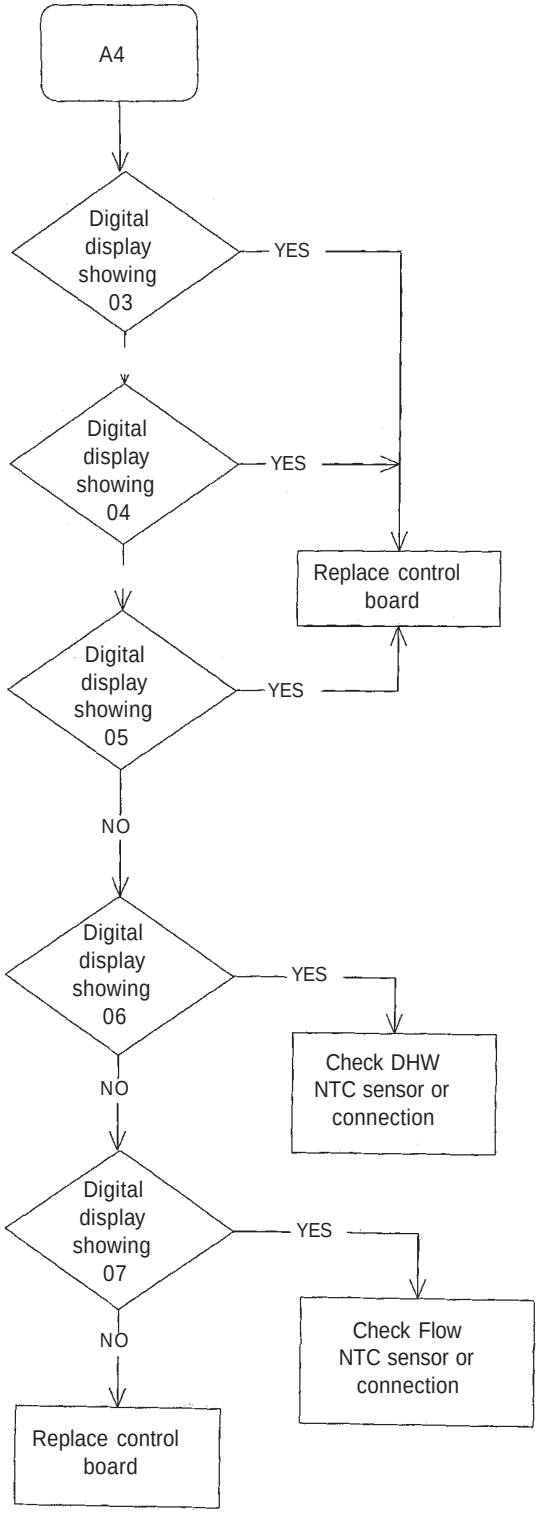
A4
Digital display showing 03
YES
Digital display showing 04
YES
Replace control board
Digital display showing 05
YES
NO
Digital display showing 06
YES
Check DHW NTC sensor or connection
NO
Digital display showing 07
YES
Check Flow NTC sensor or connection
NO
Replace control board

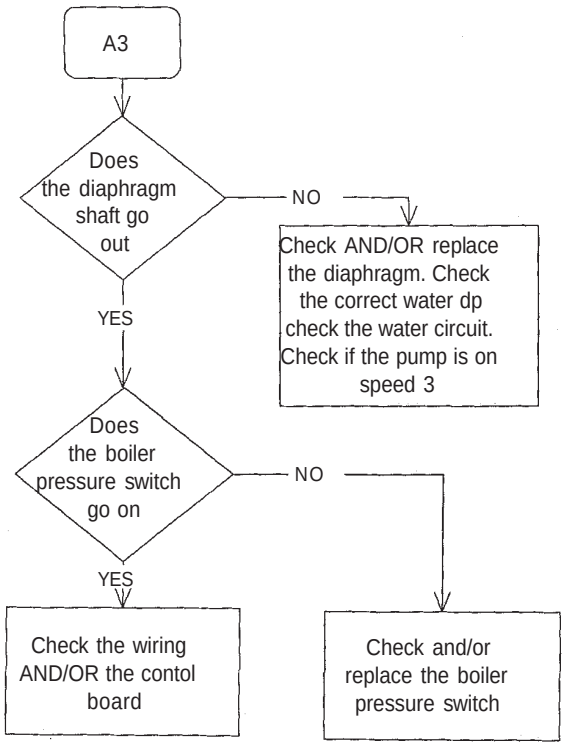
A3
Does the diaphragm shaft go out
NO
Check AND/OR replace the diaphragm. Check the correct water dp check the water circuit. Check if the pump is on speed 3
YES
Does the boiler pressure switch go on
NO
YES
Check the wiring AND/OR the contol board
Check and/or replace the boiler pressure switch

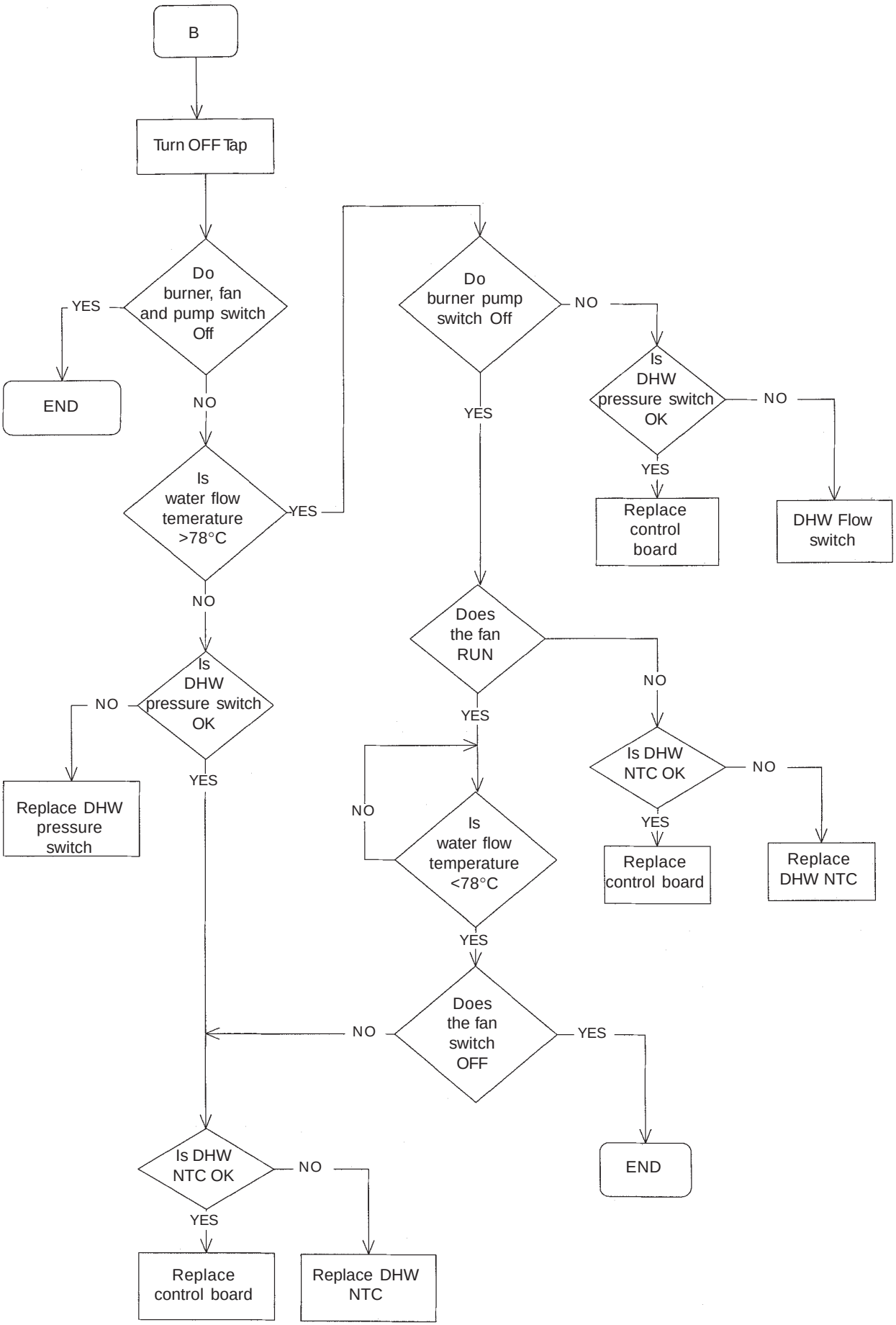
B
Turn OFF Tap
Do burner, fan and pump switch Off
YES
END
NO
Is water flow temerature >78°C
YES
NO
Is DHW pressure switch OK
NO
Replace DHW pressure switch
YES
Do burner pump switch Off
NO
Is DHW pressure switch OK
NO
YES
Replace control board
DHW Flow switch
YES
Does the fan RUN
NO
YES
Is DHW NTC OK
NO
YES
Replace control board
Replace DHW NTC
NO
Is water flow temperature <78°C
YES
Does the fan switch OFF
NO
YES
END
Is DHW NTC OK
NO
YES
Replace control board
Replace DHW NTC

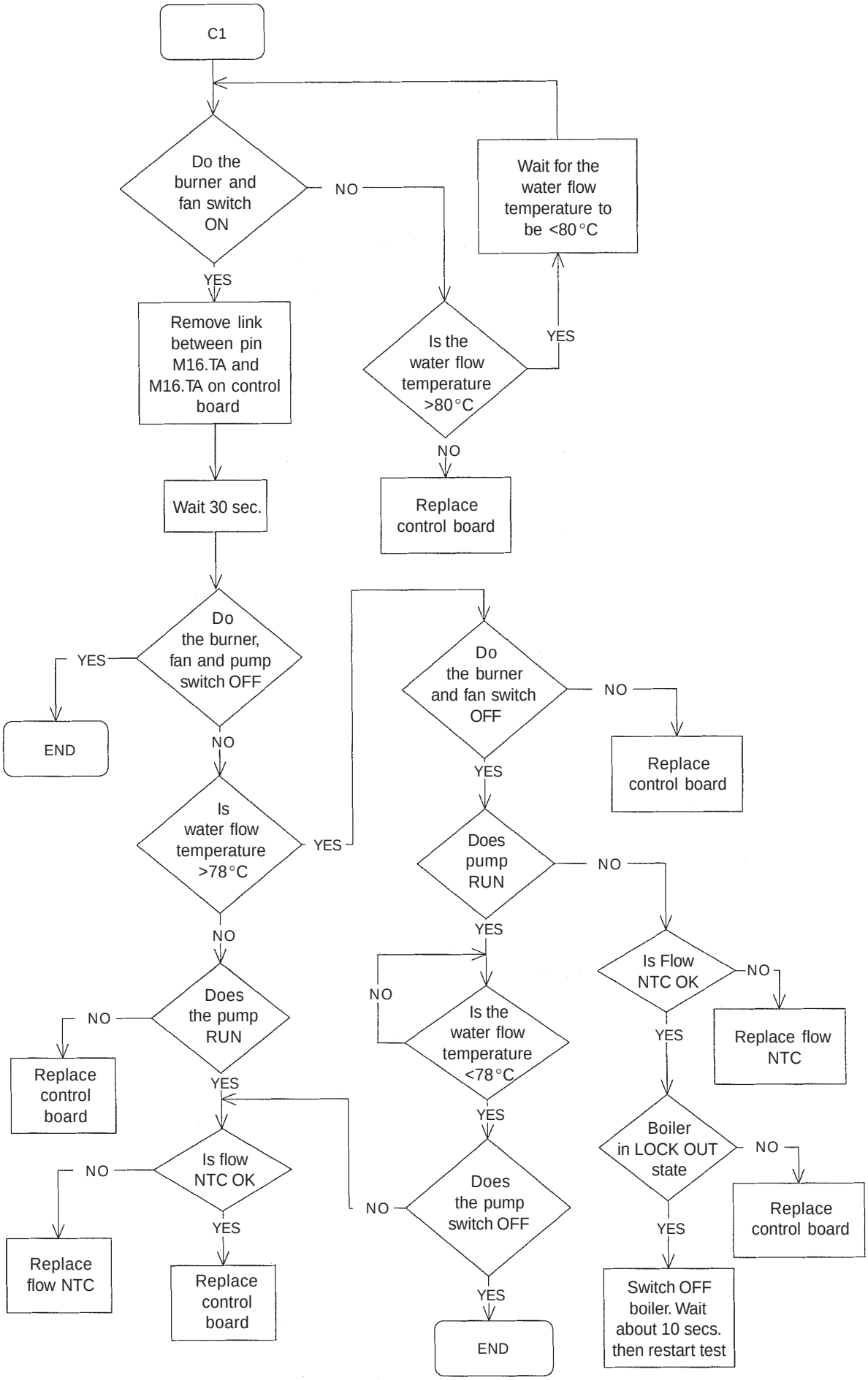
C1
Do the burner and fan switch ON
NO
Wait for the water flow temperature to be <80°C
YES
Remove link between pin M16.TA and M16.TA on control board
Is the water flow temperature >80°C
YES
NO
Replace control board
Wait 30 sec.
Do the burner, fan and pump switch OFF
YES
END
NO
Do the burner and fan switch OFF
NO
Replace control board
YES
Is water flow temperature >78°C
YES
Does pump RUN
NO
YES
NO
Does the pump RUN
NO
Replace control board
YES
Is the water flow temperature <78°C
NO
Is Flow NTC OK
NO
Replace flow NTC
YES
YES
Is flow NTC OK
NO
Replace flow NTC
YES
Replace control board
NO
Does the pump switch OFF
YES
END
Boiler in LOCK OUT state
NO
Replace control board
YES
Switch OFF boiler. Wait about 10 secs. then restart test

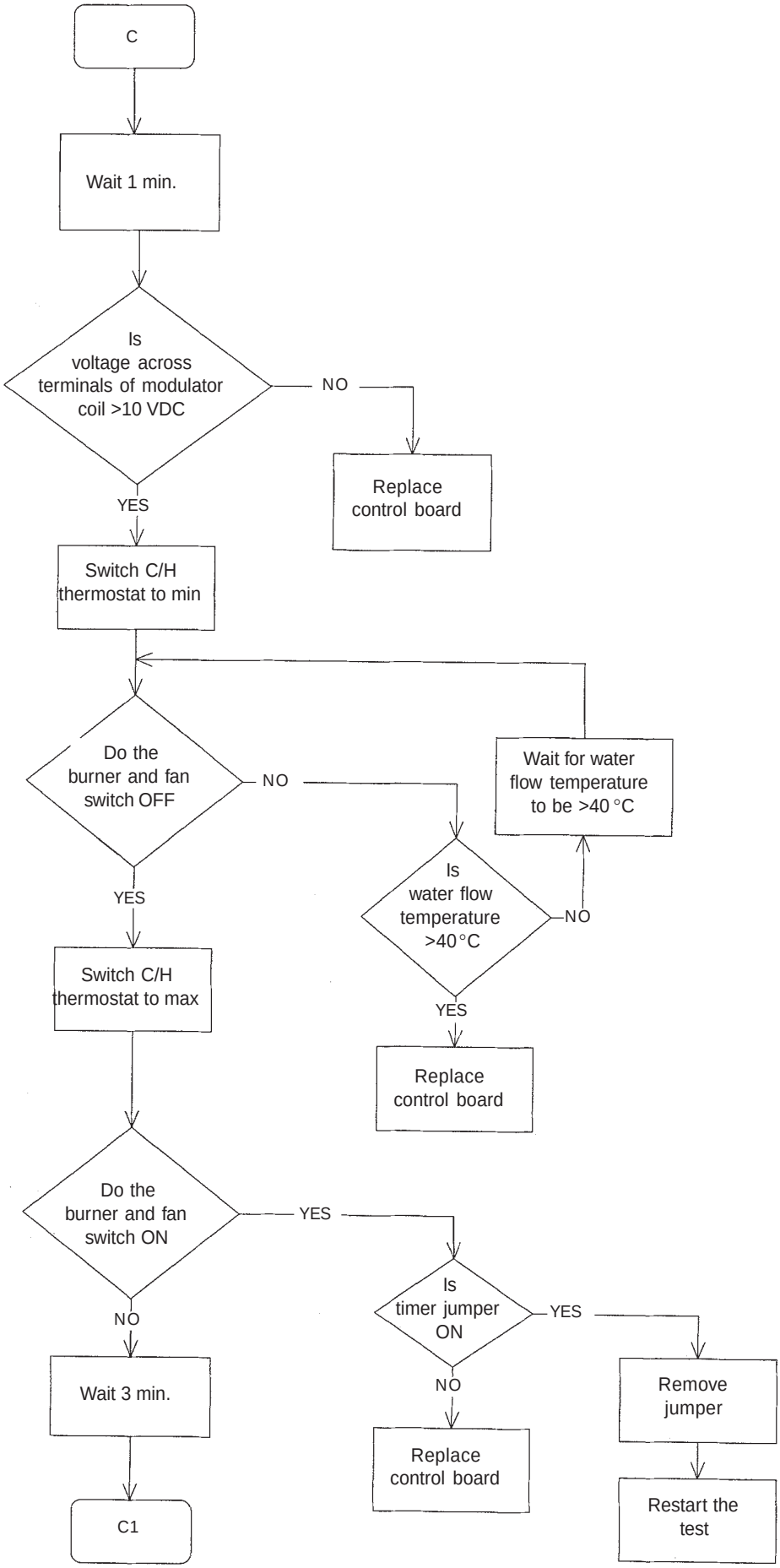
C
Wait 1 min.
Is voltage across terminals of modulator coil >10 VDC
NO
Replace control board
YES
Switch C/H thermostat to min
Do the burner and fan switch OFF
NO
Wait for water flow temperature to be >40 °C
Is water flow temperature >40 °C
NO
YES
Switch C/H thermostat to max
YES
Replace control board
Do the burner and fan switch ON
YES
Is timer jumper ON
YES
NO
Wait 3 min.
NO
Remove jumper
Replace control board
C1
Restart the test

Instructions for **(A)** Fitting Vokèra 24 Hour Time Switch (Part No. 201) and Vokèra Digital 7 Day Time Switch (Part No. 202)

(B) Wiring to external Time Switches and Room Thermostat

A. Installation of the Vokèra time switches (24 Hr and 7 Day)

Gain general access to electrical panel as 5.6.2.

Remove the clock aperture blanking plate (1) (see fig.1) by squeezing the 4 lugs on the rear of the plate together and push the plate out.

Remove the central circular disk from the plate (some force is necessary to break the holding nibs).

Remove the clock from its box.

Wire the clock as shown in fig. 2. The wiring loom to the clock comes complete with 4 spade connectors (for connection to the clock terminals), and a multi-plug for connection to the clock loom pre assembled on the appliance.

Replace the clock blanking plate back into the fascia of the appliance.

Insert the clock into the aperture from the back of the control panel, and secure the clock to the front control panel using the four screws provided.

Identify the internal clock wiring loom. Push fit the multi-plug onto the multi-plug connector connected to the time clock. The multi-plug connector is polarised, it is therefore only possible to connect the multi-plugs one way.

When all electrical connections are made replace electrical cover.

NO EXTERNAL OR INTERNAL CONTROLS

The loop between terminals 2 & 3 remains when no external or internal controls are used (as fig. 4).

INTERNAL TIME CLOCK ONLY

Remove the loop between terminals 2 & 3 and reconnect it between terminals 1 & 2 (as fig. 5).

ROOM THERMOSTAT (Without clock)

Remove the loop between terminals 2 & 3 and connect room thermostat between 2 & 3.

ROOM THERMOSTAT (With clock)

Remove the loop between terminals 2 & 3 and connect room thermostat between 1 & 2.

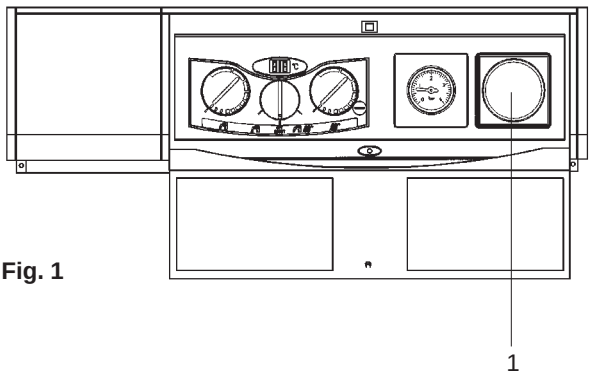

Fig. 1

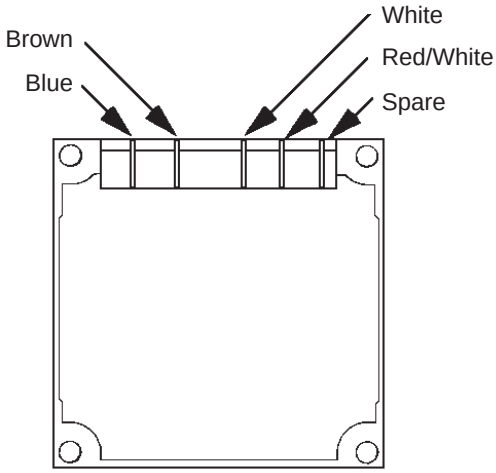

Fig. 2

Room thermostat

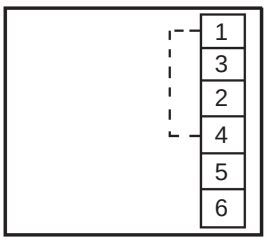

Fig. 3

Fig. 3

Fig. 4

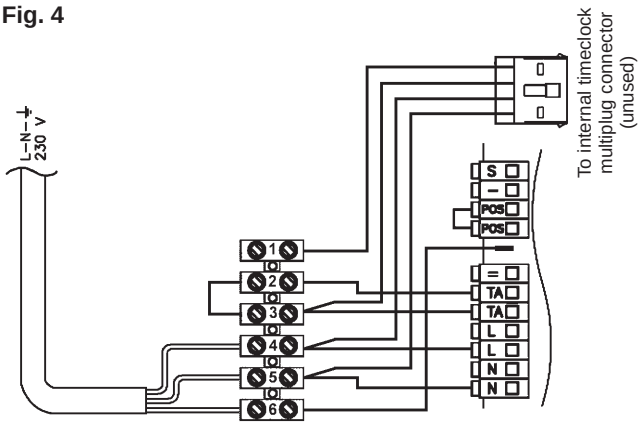

Fig. 4 Showing 230v input electrical connection without room thermostat or internal time clock.
(Internal wiring loom for timeclock and link between 2 & 3 remains)

Fig. 5

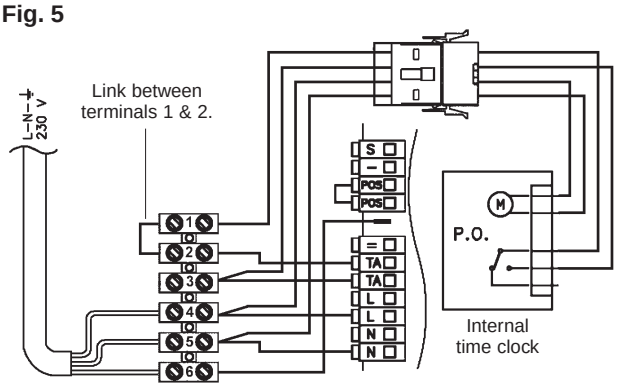

Fig. 5 Showing 230v input electrical connection and internal timer without room thermostat.
NOTE: Remove link between terminals 2 & 3 and replace between terminals 1 & 2.

Fig. 6

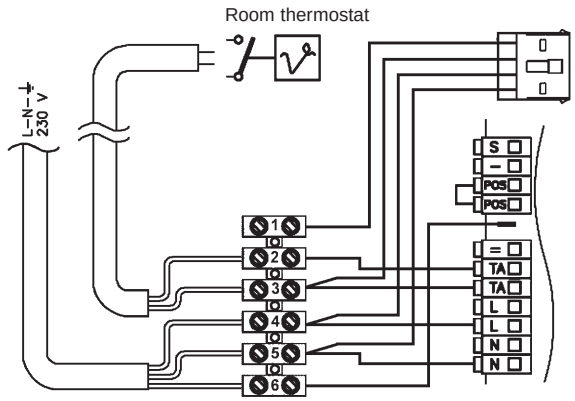

Fig. 6 Showing 230v input electrical connection and room thermostat without internal time clock. Remove link between 2 & 3 room thermostat connected between terminals 2 & 3.
Should the room thermostat require a neutral or earth, connect neutral to the terminals marked N, and the earth to the earth terminal.
Note: Room thermostat contact rated at 230v.

Fig. 7

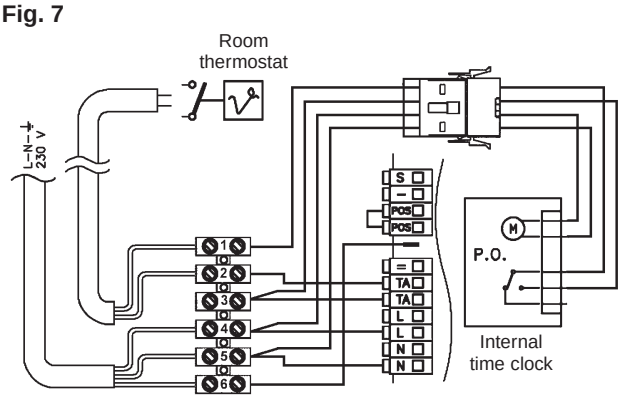

Fig. 7 Showing 230v input electrical connection internal timer and room thermostat. Remove link between terminals 2 & 3. Room thermostat connected between terminals 1 & 2.
Should the room thermostat require a neutral or earth, connect neutral to the terminals marked N, and the earth to the earth terminal.
Note: Room thermostat contact rated at 230v.

Certain electronic functions on the Linea range of appliances can be abled or disabled according to customer preference. The selections can be made by the addition or removal of jumper tags situated on the printed circuit board. Refer to fig. 53 for jumper positions on printed circuit board.

Pre-heat

To disable pre-heat facility add jumper to JP9 and remove from JP4

Jumpers JP1, JP2, JP3, JP5 and JP7 also exist on the printed circuit board **DO NOT** under any circumstances add or remove jumpers at these points.

Spare jumpers are available from Vokera stockists. Part no. 7232.

Fig. 53

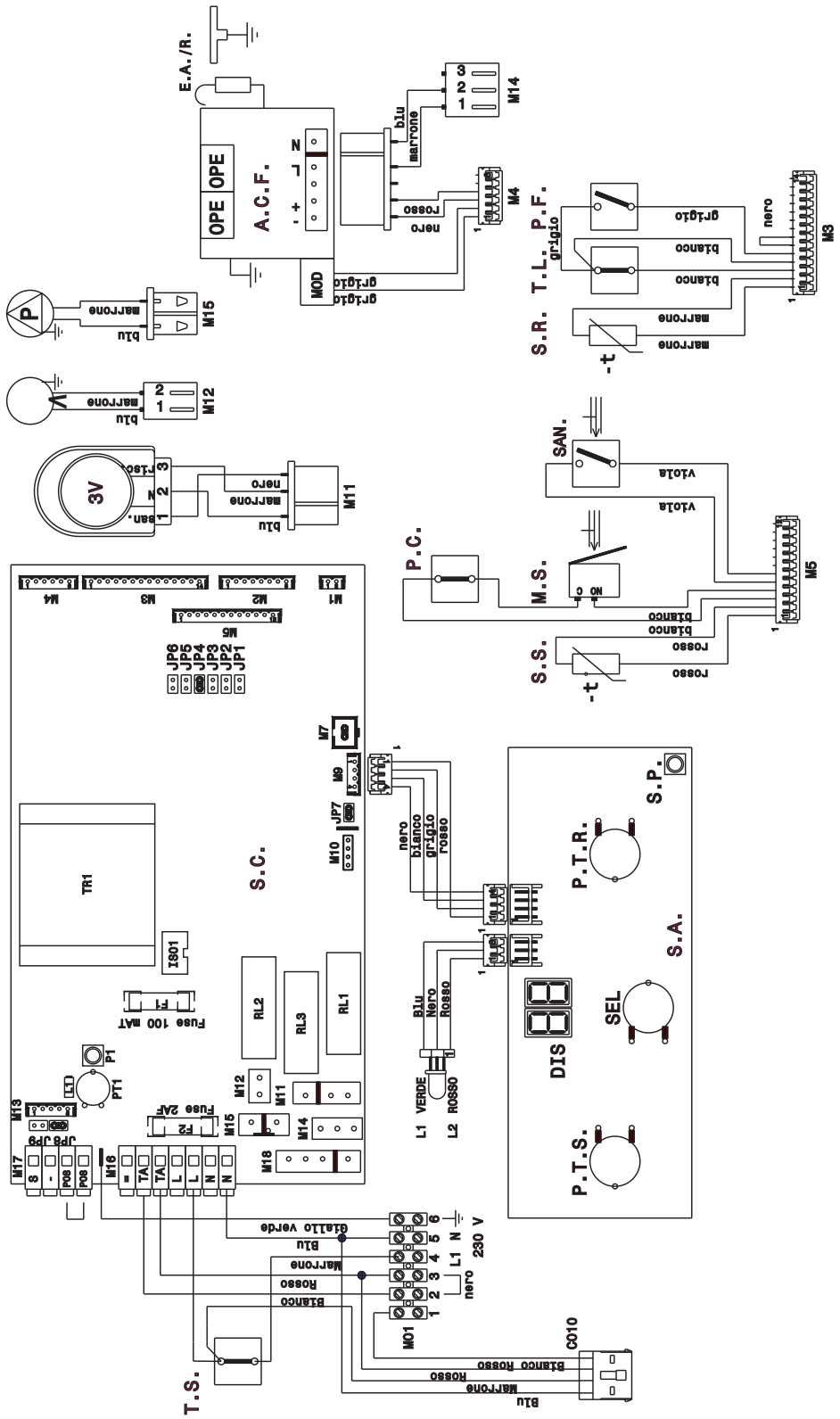

Key	
F2	Fuse (2A F)
F1	Fuse (T100MA)
SAN	H/W Flow Switch
PF	Air Pressure Switch
R1 ,2 & 3	Relay
V	Fan
P	Pump
TL	High Limit Thermostat
3V	Motorised Valve
TS	Primary Store Safety Thermostat
E.A./R.	Electrode
ACF	Ignition Control Box
MOD	Modulator Coil
SR/SS	Thermistor Sensor
PTR	C/H Temperature Control
PTS	D/H/W Temperature Control
CO10	Time Clock Connector
SEL	Mode Selector Switch
DIS	Digital Display
SP	Combustion Switch
OPE	Solenoid Operators
PC	Pressure switch

A. EARTH CONTINUITY CHECK - appliance must be electrically disconnected - meter set on Ω (ohms) x 1 scale and adjust zero if necessary.

a) Test leads from any appliance earth point to earth pin on plug - resistance must be less than 0.1 Ω (ohm).
If the resistance is greater than 0.1 Ω (ohm) check all earth wires for continuity and all contacts clean and tight.

B. SHORT CIRCUIT CHECK - appliance electrically disconnected, all switches ON (including stats)

a) meter set on Ω (ohms) x 1 scale. Test leads from L to N in appliance terminal strip/block - if meter reads 0 then there is a short circuit.

b) meter set on Ω (ohms) x 100 scale
Repeat test with leads from L to E. If meter reads less than ∞ (infinity) there is a fault.

NOTE - Should it be found that the fuse has failed but no fault is indicated, a detailed continuity check (i.e. by disconnecting and checking each component) is required to trace the faulty component. It is possible that a fault could occur as a result of local burning/arcing but no fault could be found under test. However, a detailed visual inspection should reveal evidence of burning around the fault.

C. POLARITY CHECK
Appliance connected to mains supply and meter set on 300V ac scale. Test at appliance terminal strip:-

a) Test leads from L to N - meter reads approx 230V ac

b) Test leads from L to E (⏚) - meter reads approx 230V ac

c) Test leads from N to E (⏚) - meter reads from O-15V ac*

Thus the terminal marked L is the live terminal. If the low* V ac reading is given on terminals other than N to E (⏚) there is an electrical fault.

Repeat the test at the appliance plug/inlet spur to check the wiring system up to the appliance and rectify any fault. If necessary repeat the test at the supply system socket/spur - if the fault also occurs at this stage then there is a house system fault which requires attention by the ELECTRICITY AUTHORITY. The customer should be warned not to use the appliance until this examination has been carried out.

D. RESISTANCE TO EARTH CHECK

Appliance must be disconnected from mains supply and meter set on Ω (ohms) x 100 scale. All switches, including stats, ON - Test leads from L to E - if meter reads other than infinity (∞) there is a fault which should be isolated. A detailed continuity check is required to trace the faulty component.

IMPORTANT - This series of checks are the first electrical checks to be carried out during a fault finding procedure. On completion of the service/fault finding task which has required the breaking and remaking of electrical connections then the checks - A. Earth Continuity. C. Polarity and D. Resistance to Earth - must be repeated.

11.1 Gas Rates (LPG)

	Linea Max
Min. Gas Rate	1.63 litres/h
Max. Gas Rate	4.85 litres/h

11.2 Burner Details (LPG)

Main Burner	Polidoro NP14
Main Burner Injectors	14 x 0.77
Burner Pressure Max. Rate	36.0 mbar
Burner Pressure Min. C/H	5.5 mbar
Burner Pressure Min. DHW	4.3 mbar
Burner Pressure Soft Light	16.7 mbar

11.3 RELATED DOCUMENTS

BS 6891		1988	Low pressure installation pipes
BS 6798		1987	Boilers of rated input not exceeding 60kW
BS 5449	Part 1	1990	Forced circulation hot water systems
BS 5546		1990	Installation of gas hot water supplies for domestic purposes (2nd family gases)
BS 5440	Part 1	1990	Flues
BS 5482	Part 1	1994	Domestic Butane & Propane Gas burners in permanent dwellings

11.4 GAS SUPPLY

A gas supply should be connected to the boiler by a competent L.P.G. installer and should be of sufficient size to supply the boiler at its maximum output.

An existing supply should be checked by the installer or L.P.G. supplier to ensure that it can deal with the rate of gas supply required for all the appliances when they are in use at the same time.

11.5 GAS SUPPLY INSTALLATION

11.5.1 Inspect the entire installation including the meter, test for soundness and purge.

11.6 CHECK BURNER PRESSURE

11.6.1 The heat inputs for high and low gas rates are factory set to the maximum values given in section 11.2 but it is necessary to check/adjust this when commissioning the appliance.

11.6.2 Turn off the main electrical supply. Gain access to the interior.

11.6.3 Gain access to the electrical terminals as 5.6.2. Ensure the Jumper at point JP8 is removed.

11.6.4 Locate the main burner pressure test point (see fig. 21) and slacken the screw half a turn in an anti clockwise direction. Attach a suitable pressure gauge as described at 6.7.

IMPORTANT: Before measuring gas pressures it is imperative that the protective cover over the gas valve adjustment screw is removed. (see fig. 46)

Turn on electricity supply. Turn mode selector switch to the position and fully open a domestic hot water tap to operate boiler in dhw mode. Adjust hot water control knob to it's maximum setting.

11.6.5 The pressure reading for maximum output should be:
36.0mbar.
(Plus or minus 3.6mbar.)

If the pressure is wrong it should be adjusted as instructed in 8.25. (N.B. Whenever the maximum rate is adjusted check and adjust the minimum rate too).

11.6.6 Reduce the domestic water flow rate to approximately 3-4 litres/min. Turn the domestic control knob slowly to minimum the boiler output will reduce to the minimum setting. If low flame cannot be established in this way, turn off the electricity supply, and disconnect a grey wire from the

Switch on the electricity supply, the boiler will now light at the minimum setting.

11.6.7 When low flame is established the pressure reading should be :
4.3mbar.
(Plus or minus 0.43mbar.)
If it is different adjustment should be made in accordance with the instructions in 8.25.

11.6.8 If a grey wire was disconnected from the modulator coil to check the minimum setting, turn off the electricity supply and reconnect the wire.

11.7 **Maximum Rate in Central Heating Mode**
The Linea range does not require any adjustment to the maximum heat requirement of the system load. See 8.25.5.

11.8 **Setting the Minimum Rate for Central Heating**
Turn off the main electrical supply.

Gain access to the electrical terminal blocks (5.6) (see fig. 20).

Turn the mode selector switch to the position, ensure that the room thermostat and/or timeclock (if fitted) are calling for heat. Turn the heating thermostat to maximum and ensure the appliance ignites.

Identify minimum adjustment button on pcb (see fig. 47).

Press the minimum adjustment button once. The boiler will operate in central heating mode at a minimum gas pressure. An LED on the PCB will flash red to confirm the appliance is in central heating minimum mode.

The gas pressure should now be:
5.5 mbar.
plus or minus 0.55 mbar.

If the reading is incorrect it should be adjusted as follows:

Identify the minimum adjustment potentiometer on the PCB (see fig. 47).

With the boiler still in central heating mode and the burner at the minimum rate, using a small screwdriver turn the potentiometer clockwise to increase & anti-clockwise to decrease the gas pressure.

When all is adjusted, press the minimum adjustment button once (the appliance will return to normal operation). Turn the appliance off.

11.9 Soft light ignition and range rating for central heating is fully automatic, no adjustment is necessary.

11.10 Turn mode selector to the OFF position, disconnect pressure gauge, re-tighten screw. Relight boiler.

11.11 Re- check for gas soundness.

11.12 Replace electrical controls panel.

11.13 Refix the boiler casing.

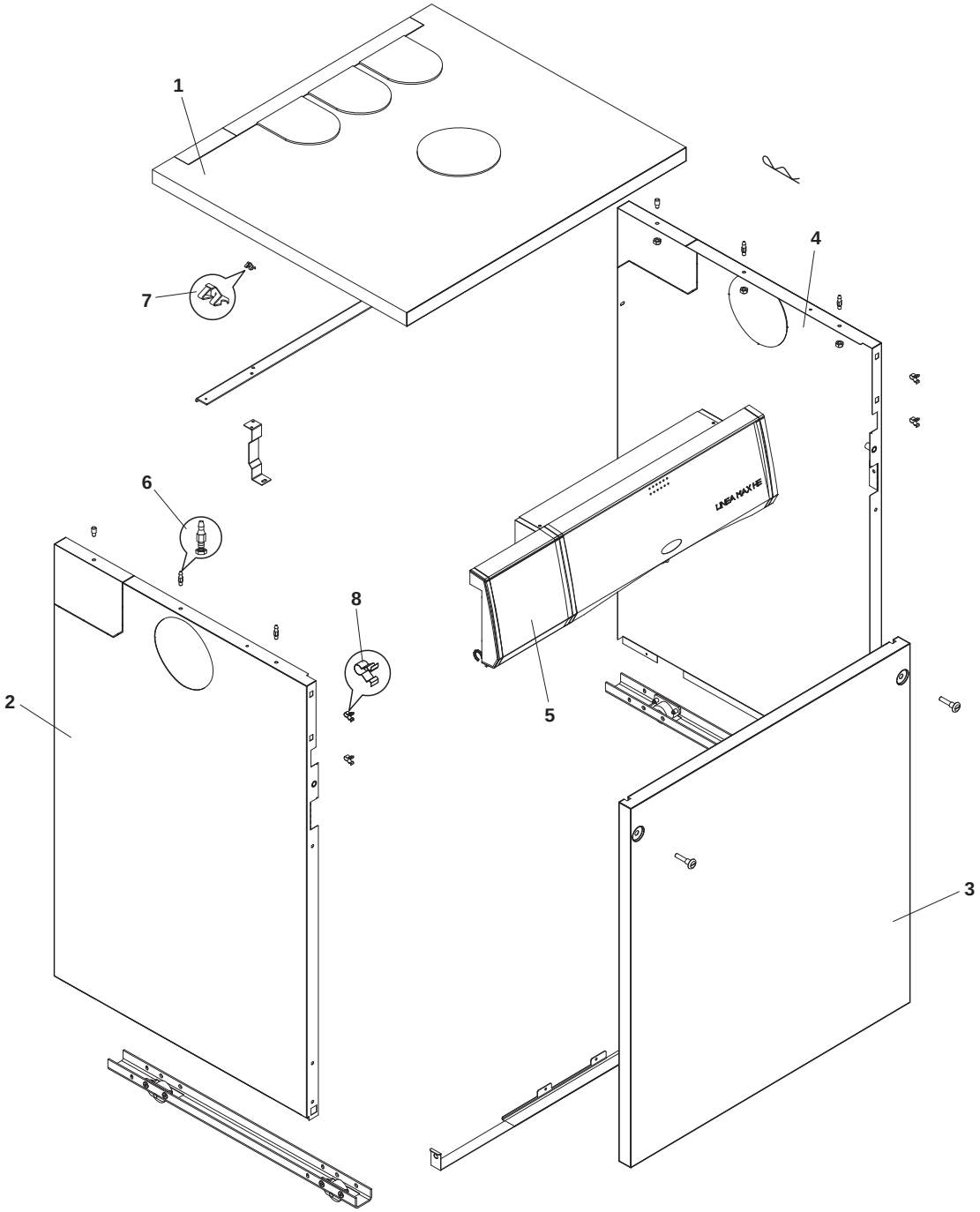

POS	DESCRIPTION	612102280 50-37685-12890-8
1	Cover	R102796
2	Left side	R102915
3	Door	R102785
4	Right side	R102914
5	Complete electrical panel	R106326
6	Closing pin	R100940
8	Spring	R100939
9	Spring	R101821

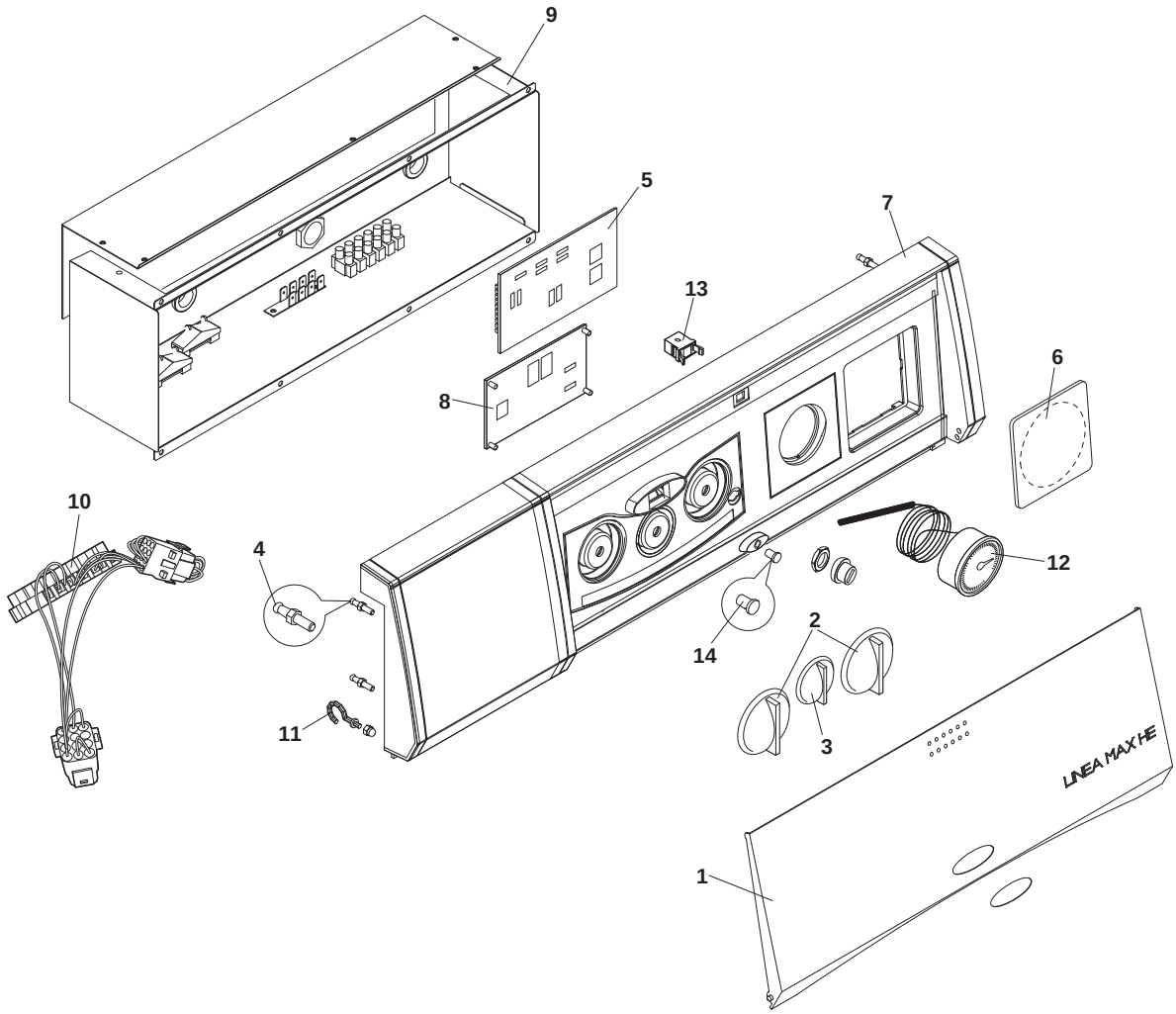

POS	DESCRIPTION	612102280 50-37685-12890-8
1	Instrument holder panel cover	R106334
2	Temperature setting knob	R102402
3	Function selection knob	R102403
4	Closing pin	R103277
5	Management board	R106327
6	Clock holder cap	R102399
7	Instrument holder panel	R102392
8	Management board	R102405
9	Fairing	R102934
10	Complete electrical panel wiring	R106328
11	Hook with nut	R102401
12	Hydrometer	R102938
13	PUSH-PUSH closure	R102254
14	Two-colour LED	R100057

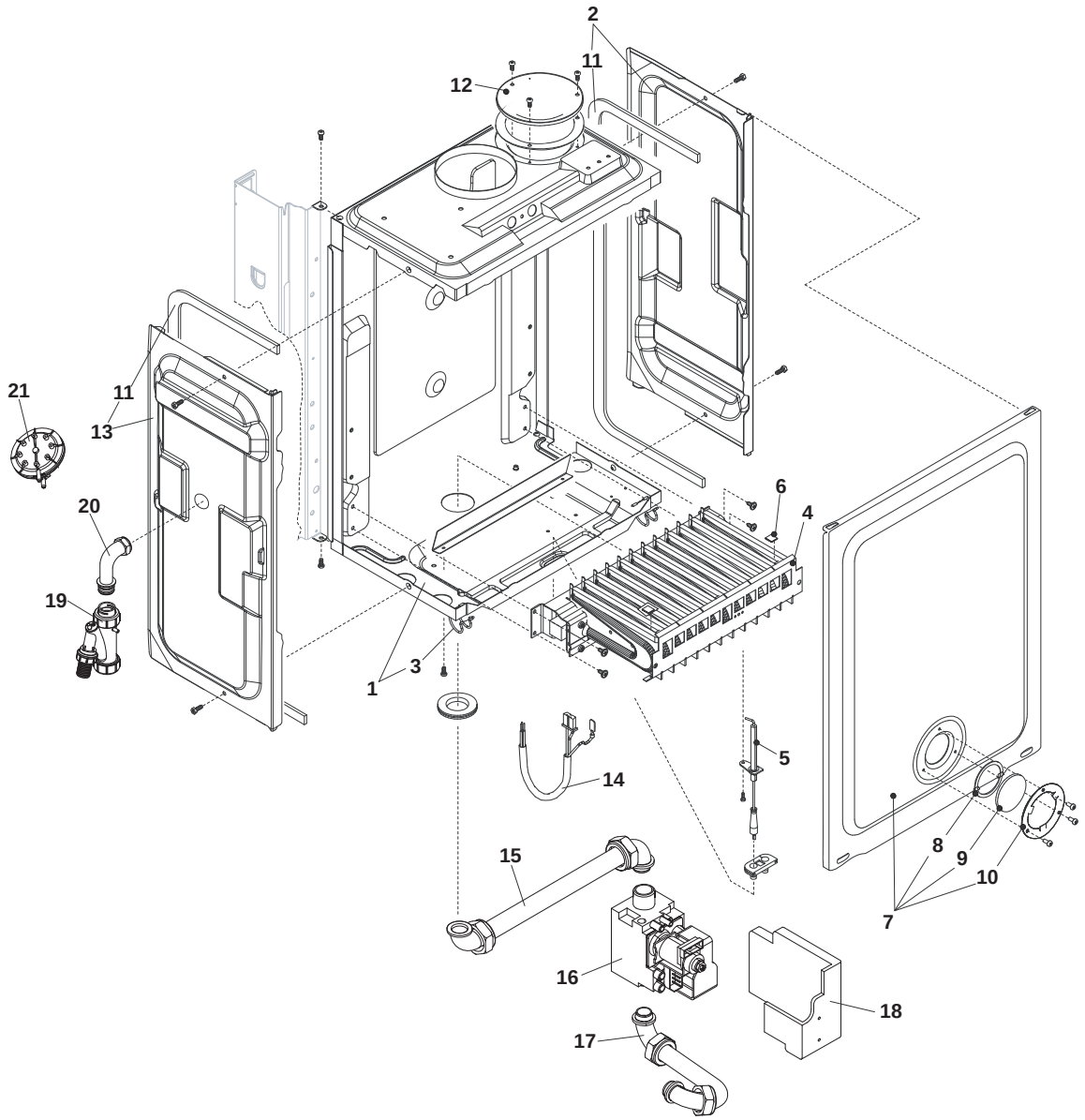

POS	DESCRIPTION	612102280 50-37685-12890-8
1	Air box botton	R10027894
2	Air box side with washer	R10024166
3	Air box clip	R0442
4	Ng burner	R10027564
5	Spark-sensing electrode	R10025985
6	Burner plate	R5172
7	Cover assembly	R10020217
8	Washer	R5072
9	Pilot sight glass	R3139
10	Fixing glass flange	R4007
11	Washer	R5905
12	Air box hole cap	R8084
13	Air box side with washer	R10027897
14	Combustion wiring harness	R10027898
15	Burner head pipe	R106368
16	Gas solenoid valve	R106332
17	Burner head pipe	R102930
18	Flame control unit	R102411
19	Condensate drain trap	R106325
20	Condensate drain pipe	R106324
21	Pressure switch	R106323

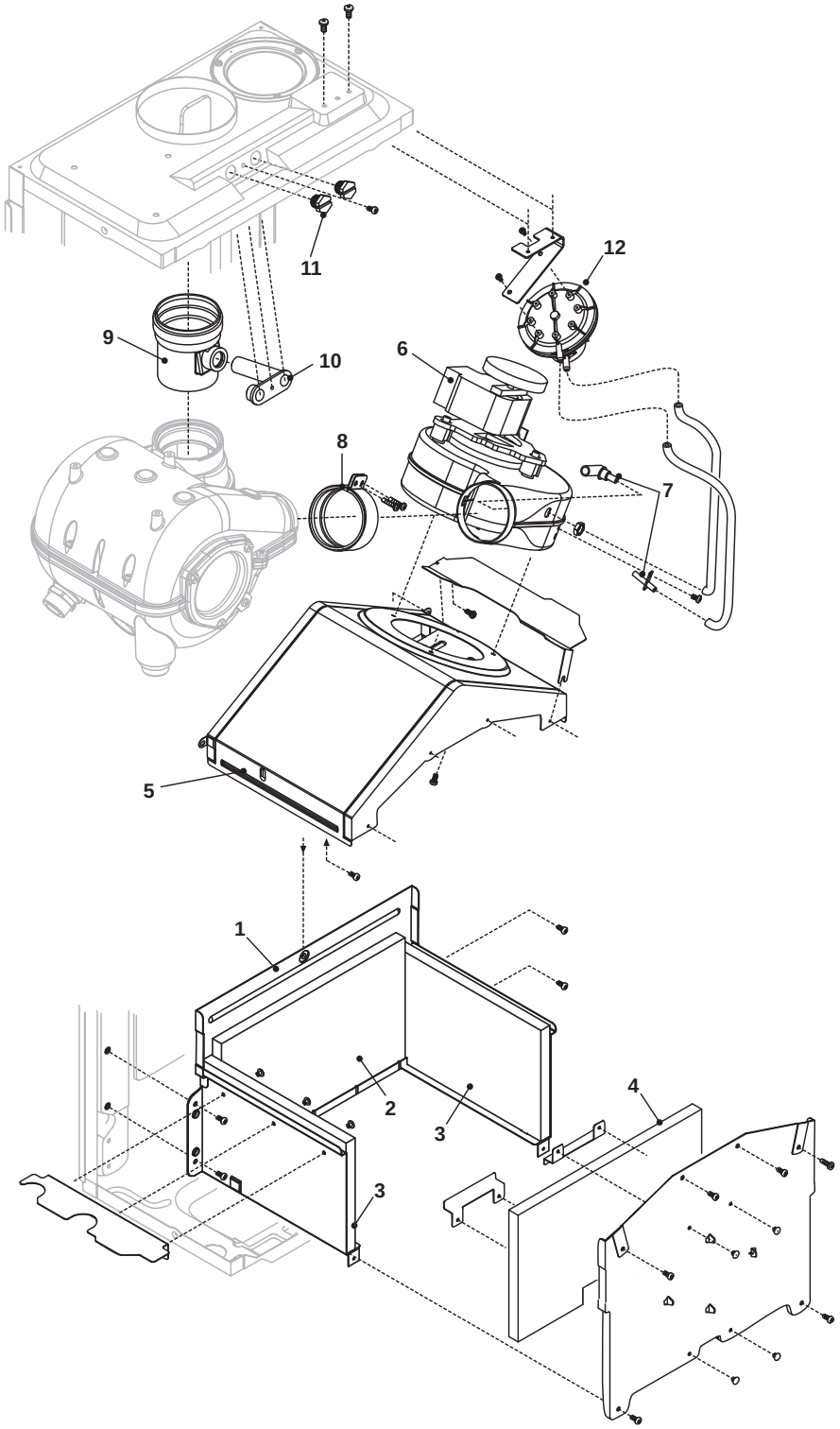

POS	DESCRIPTION	612102280 50-37685-12890-8
1	Combustion chamber assembly	R10026406
2	Rear panel	R5316
3	Lateral panel	R5271
4	Front panel	R5315
5	Hood assembly	R10024125
6	Fan	R10024035
7	Venturi and pressure tube kit	R01005405
8	Clamp	R10024126
9	Tube	R10024137
10	Block with combustion analysis check point	R10026933
11	Brass cap	R8086
12	Pressure switch	R10020889

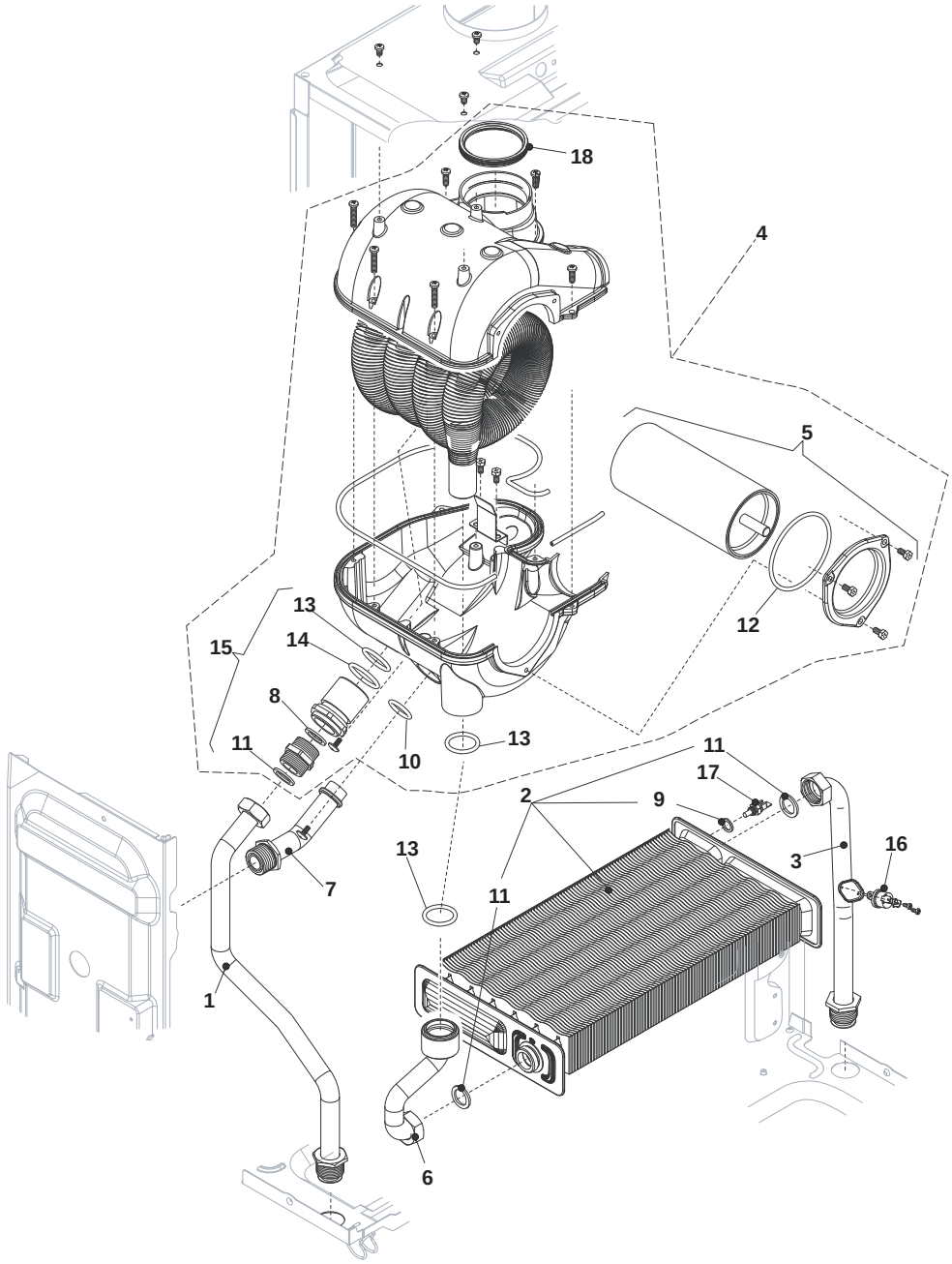

POS	DESCRIPTION	612102280 50-37685-12890-8
1	Pipe	R10024130
2	Heat exchanger	R2378
3	Pipe	R10021041
4	Condensing unit assembly	R01005411
5	Retarder	R10024136
6	Pipe	R10024129
7	Pipe	R10027896
8	Washer	R5023
9	Washer	R5041
10	O ring	R6898
11	Washer	R10023699
12	O-ring	R10024141
13	O-ring	R10024142
14	O-ring	R10024143
15	Connections kit	R01005292
16	High limit thermostat	R10024710
17	Ntc sensor	R10027352
18	Washer	R10027540

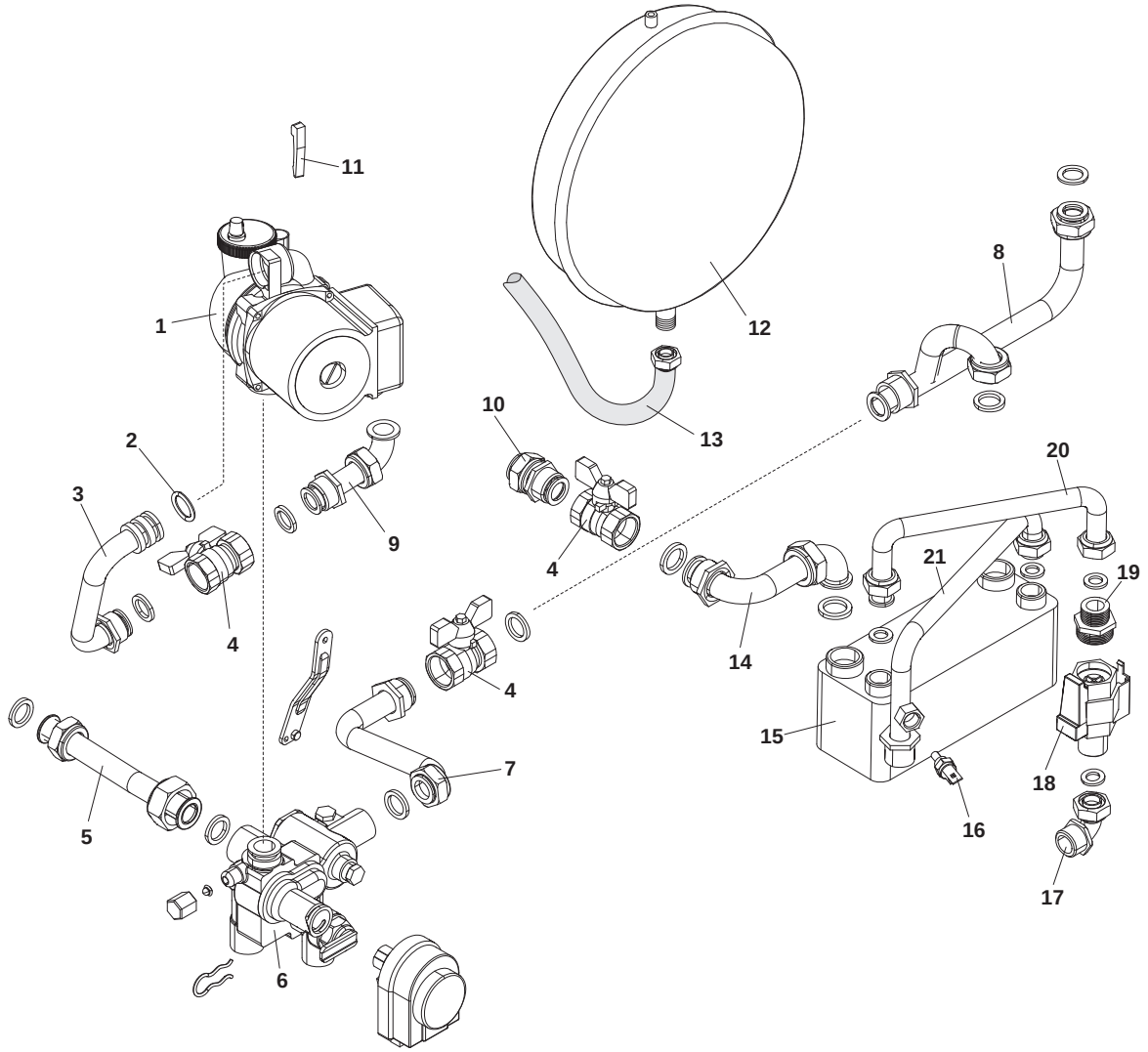

POS	DESCRIPTION	612102280 50-37685-12890-8
1	Pump	R103321
2	Gasket OR	R102960
3	System return pipe	R102964
4	Water cock	R102961
5	Storage return pipe	R102927
6	Water distributor assembly	R102859
7	System outlet pipe	R102963
8	System outlet pipe	R102962
9	System return pipe	R102965
10	Storage outlet pipe	R102924
11	Pump locking spline	R102959
12	Expansion vessel	R106333
13	Hose	R106331
14	Storage outflow pipe	R102931
15	DHW exchanger	R103328
16	NTC probe	R100030
17	Flow switch connection pipe	R102955
18	Flow switch	R102956
19	Flow switch connection fitting	R102330
20	Exchanger inlet pipe	R102954
21	DHW outlet pipe	R102953

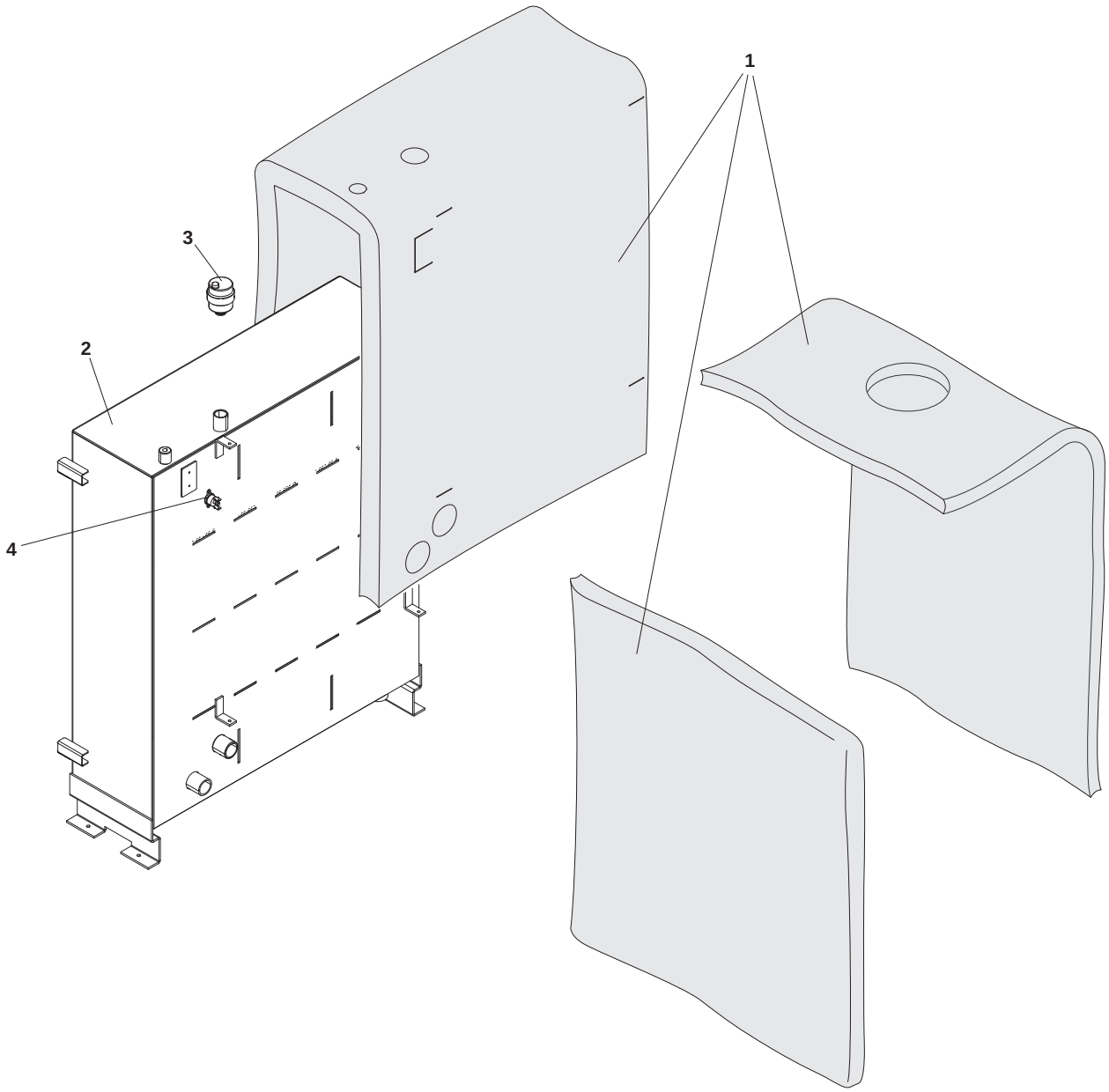

POS	DESCRIPTION	612102280 50-37685-12890-8
1	Insulation	R104198
2	Storage heater body 60 l	R102799
3	Automatic vent valve	R100618
4	Safety thermostat	R104199

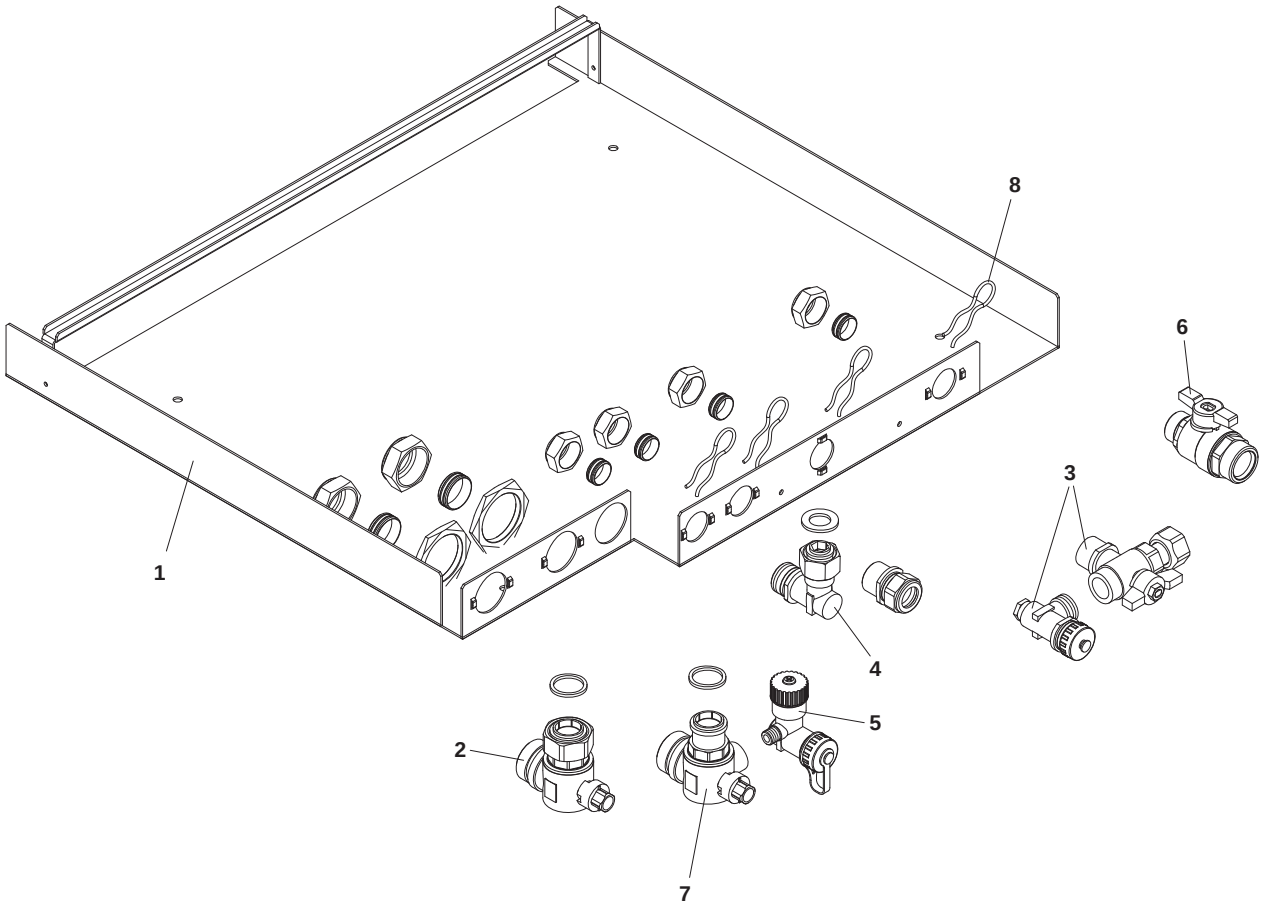

POS	DESCRIPTION	612102280 50-37685-12890-8
1	Complete template	R106340
2	Water cock	R106329
3	Water cock	R103317
4	Water outlet fitting	R103325
5	Water cock	R106330
6	Water cock	R103327
7	3-position water cock	R103319
8	Spring	R102950

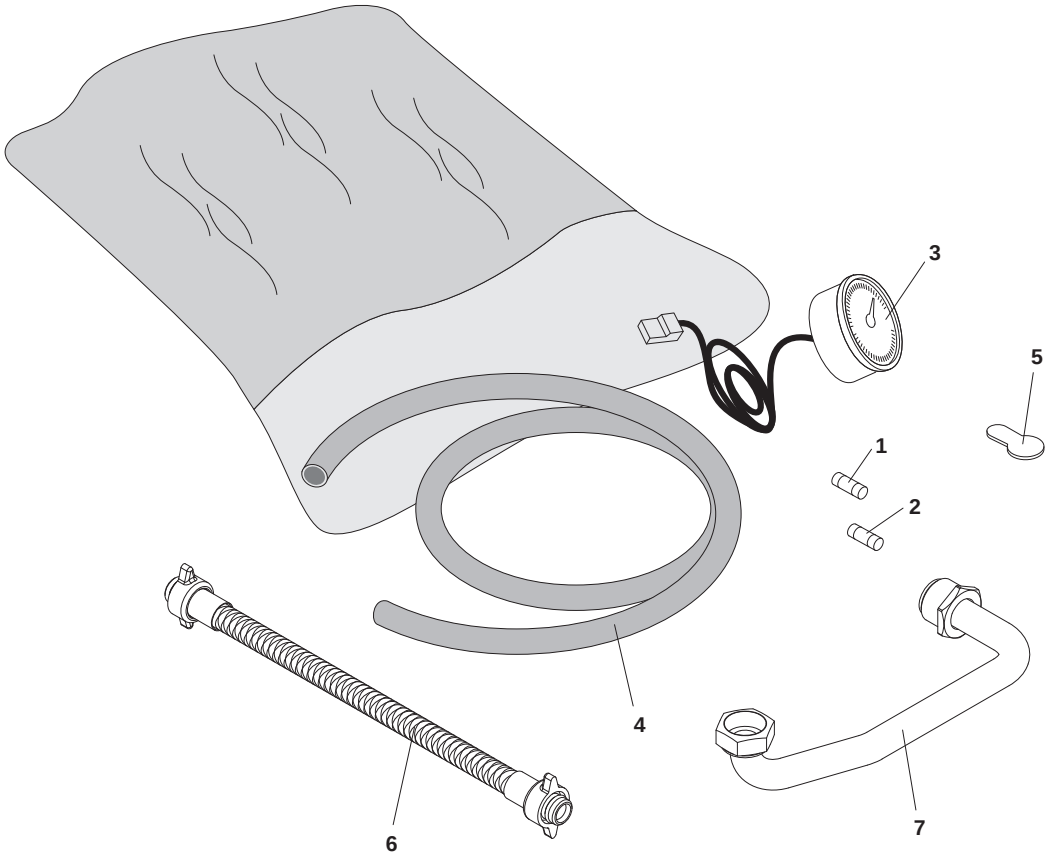

POS	DESCRIPTION	612102280 50-37685-12890-8
1	Fuse 100MA-T	R102936
2	Fuse 2A-T	R102937
3	Timer wiring	R106335
4	Condensate drain pipe	R106336
5	Key	R103539
6	Hose	R103318
7	Safety valve connection pipe	R102946

BENCHMARK No. | | | | | | |

COLLECTIVE MARK

GAS BOILER COMMISSIONING CHECKLIST

BOILER SERIAL No. NOTIFICATION No.

CONTROLS To comply with the Building Regulations, each section must have a tick in one or other of the boxes

TIME & TEMPERATURE CONTROL TO HEATING	ROOM T/STAT & PROGRAMMER/TIMER	PROGRAMMABLE ROOMSTAT
TIME & TEMPERATURE CONTROL TO HOT WATER	CYLINDER T/STAT & PROGRAMMER/TIMER	COMBI BOILER
HEATING ZONE VALVES	FITTED	NOT REQUIRED
HOT WATER ZONE VALVES	FITTED	NOT REQUIRED
THERMOSTATIC RADIATOR VALVES	FITTED	
AUTOMATIC BYPASS TO SYSTEM	FITTED	NOT REQUIRED

FOR ALL BOILERS CONFIRM THE FOLLOWING

THE SYSTEM HAS BEEN FLUSHED IN ACCORDANCE WITH THE BOILER MANUFACTURER'S INSTRUCTIONS?

THE SYSTEM CLEANER USED

THE INHIBITOR USED

FOR THE CENTRAL HEATING MODE, MEASURE & RECORD

GAS RATE	^{3}/hr	^{3}/hr
BURNER OPERATING PRESSURE (IF APPLICABLE)	N/A	
CENTRAL HEATING FLOW TEMPERATURE		°C
CENTRAL HEATING RETURN TEMPERATURE		°C

FOR COMBINATION BOILERS ONLY

HAS A WATER SCALE REDUCER BEEN FITTED? YES NO

WHAT TYPE OF SCALE REDUCER HAS BEEN FITTED?

FOR THE DOMESTIC HOT WATER MODE, MEASURE & RECORD

GAS RATE	^{3}/hr	^{3}/hr
MAXIMUM BURNER OPERATING PRESSURE (IF APPLICABLE)	N/A	mbar
COLD WATER INLET TEMPERATURE		°C
HOT WATER OUTLET TEMPERATURE		°C
WATER FLOW RATE		lts/min

FOR CONDENSING BOILERS ONLY CONFIRM THE FOLLOWING

THE CONDENSATE DRAIN HAS BEEN INSTALLED IN ACCORDANCE WITH THE MANUFACTURER'S INSTRUCTIONS? YES

FOR ALL INSTALLATIONS CONFIRM THE FOLLOWING

THE HEATING AND HOT WATER SYSTEM COMPLIES WITH CURRENT BUILDING REGULATIONS

THE APPLIANCE AND ASSOCIATED EQUIPMENT HAS BEEN INSTALLED AND COMMISSIONED IN ACCORDANCE WITH THE MANUFACTURER'S INSTRUCTIONS

IF REQUIRED BY THE MANUFACTURER, HAVE YOU RECORDED A CO/CO_2 RATIO READING? N/A YES CO/CO_2 RATIO

THE OPERATION OF THE APPLIANCE AND SYSTEM CONTROLS HAVE BEEN DEMONSTRATED TO THE CUSTOMER

THE MANUFACTURER'S LITERATURE HAS BEEN LEFT WITH THE CUSTOMER

COMMISSIONING ENG'S NAME PRINT CORGI ID No.

SIGN DATE

SERVICE INTERVAL RECORD

It is recommended that your heating system is serviced regularly
and that you complete the appropriate Service Interval Record Below.

Service Provider. Before completing the appropriate Service Interval Record below, please ensure you have carried out the service as described in the boiler manufacturer's instructions. Always use the manufacturer's specified spare part when replacing all controls

SERVICE 1 DATE
ENGINEER NAME
COMPANY NAME
TEL No.
CORGI ID CARD SERIAL No.
COMMENTS

SIGNATURE

SERVICE 2 DATE
ENGINEER NAME
COMPANY NAME
TEL No.
CORGI ID CARD SERIAL No.
COMMENTS

SIGNATURE

SERVICE 3 DATE
ENGINEER NAME
COMPANY NAME
TEL No.
CORGI ID CARD SERIAL No.
COMMENTS

SIGNATURE

SERVICE 4 DATE
ENGINEER NAME
COMPANY NAME
TEL No.
CORGI ID CARD SERIAL No.
COMMENTS

SIGNATURE

SERVICE 5 DATE
ENGINEER NAME
COMPANY NAME
TEL No.
CORGI ID CARD SERIAL No.
COMMENTS

SIGNATURE

SERVICE 6 DATE
ENGINEER NAME
COMPANY NAME
TEL No.
CORGI ID CARD SERIAL No.
COMMENTS

SIGNATURE

SERVICE 7 DATE
ENGINEER NAME
COMPANY NAME
TEL No.
CORGI ID CARD SERIAL No.
COMMENTS

SIGNATURE

SERVICE 8 DATE
ENGINEER NAME
COMPANY NAME
TEL No.
CORGI ID CARD SERIAL No.
COMMENTS

SIGNATURE

SERVICE 9 DATE
ENGINEER NAME
COMPANY NAME
TEL No.
CORGI ID CARD SERIAL No.
COMMENTS

SIGNATURE

SERVICE 10 DATE
ENGINEER NAME
COMPANY NAME
TEL No.
CORGI ID CARD SERIAL No.
COMMENTS

SIGNATURE

Vokèra
heating for life

Cod. 068463(EN) - Rev . 1 (10/05)

Registered address:
Vokèra Ltd
Borderlake House
Unit 7 Riverside Industrial Estate
London Colney
Herts AL2 1HG

enquiries@vokera.co.uk

www.vokera.co.uk
www.vokera.ie

Sales, General Enquires
T 0844 391 099
F 0844 391 0998

Vokèra Ireland
West Court, Callan
Co Kilkenny
T 056 7755057
F 056 7755060

Vokèra Limited reserve the right to change
specification without prior notice
Consumers statutory rights are not affected.

A Riello Group Company.
Company Reg No: 1047779