Vokèra

Linea Plus AG

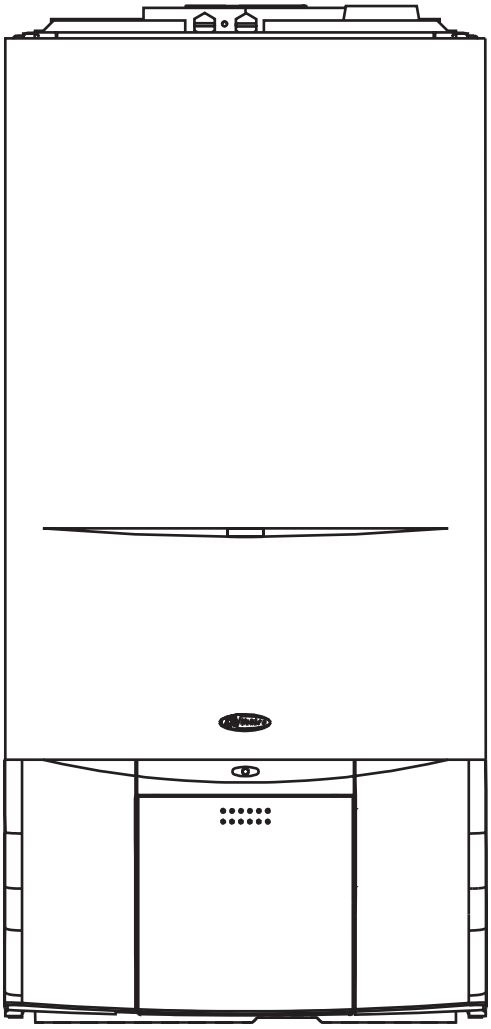

Installation & Servicing Instructions

CE

British Gas Service Listed
G.C. No. 47 094 27 (Linea 24)
G.C. No. 47 094 28 (Linea 28)
G.C. No. 47 094 29 (Linea Plus)

THESE INSTRUCTIONS TO BE RETAINED BY USER

spares & parts online
IBASIS.co.uk©

CONTENTS

Section	Subject	Page no
Section 1	**Introduction**	1
	General Layout	1
Section 2	**Design Principles & Operating Sequence**	2
	Schematic Diagram	2
	Central Heating Mode	2
	Domestic Hot Water Mode	2
	Safety Devices	2
	Frost Thermosat	2
Section 3	**Technical Data**	3
	Dimensions & Contents	3
	Connection Sizes	3
	Installation Requirements	3
	Electrical Details	3
	Performance & Limitations	3
	Working Pressure (H/W & C/H)	3
	Flow Rates	3
	Central Heating Pump Duty	4
Section 4	**General Requirements**	5
	Related Documents	5
	Location of Appliance	5
	Gas Supply	5
	Flue System	5
	Air Supply	6
	Water Circulation (C/H)	6
	Pipework	6
	By-Pass	6
	System Design	6
	Filling Point	8
	Electrical Supply	8
	Showers	8
Section 5	**Installation**	9
	Delivery	9
	Unpacking	9
	Preparing For Mounting	9
	Mounting The Appliance	10
	Fitting The Flue Horizontal - Vertical Twin	10-11
	Connecting Gas & Water Supplies	15
	Electrical connections	15
Section 6	**Commissioning**	17
	Gas Installation	17
	Initial Flushing of Pipework	17
	Initial Filling of System	17
	System Design Pressure	17
	Checking Electrical supply	17
	Lighting The Boiler	17
	Checking Burner Pressures	18
	Range Rating C/H	19
	Checking The Flue System	19
	Checking The Heating Thermistor	19
	Regulating The C/H System	19
	Final Flushing The C/H System	19
	Filling & Testing H/W System	19
	Final Checks For Operation	20
	Concluding Operations	20
Section 7	**Instructing The User**	20
Section 8	**Servicing Instructions**	21
	General	21
	Recommended Routine Servicing	21
	Replacement Of Parts	21
	To Gain General Access	22
	To Remove:	
	Room Sealed Chamber Front Cover	22
	Main Burner & Electrode	23
	Main Burner Injectors	23
	Main Heat Exchanger	23
	Fan	24
	DAPS	24
	Combustion Chamber Insulation Panel	24
	Ignition PCB	25
	Gas Control Valve	25
	Pump	26
	Domestic Flow Switch	26
	Diverter Valve	26
	Domestic Heat Exchanger	27
	Diverter Valve	27
	Main Expansion Vessel	27
	Safety Valve	28
	Pressure Switch	28
	Motorised Valve	29
	Printed Circuit Board	29
	Display Printed Circuit Board	29
	Safety Thermostat	29
	Thermistor Sensors	29
	Pressure Gauge	30
	Setting Gas Pressures	31
Section 9	**Operational Checks & Wiring**	32
	Sequence of Functions	32
	Diagnostic Error Codes	33
	Fault Finding Guides	34-43
Section 10	**Appendix**	44
	Internal Time Clock Installation	44
	External Time Clock Installation	46
	S & Y Plan Installations	47
	Exploded Diagrams	48-52
	Abling & Disabling Controls	53
	Functional Flow Diagram	54
	Illustrated Wiring Diagram	55
	Preliminary Electrical System Checks	56
	LPG Instructions	57-58

The Vokèra Linea Plus is a combined central heating and domestic hot water appliance. By design it incorporates full sequence electronic ignition, circulating pump, expansion vessel, safety valve, temperature gauge, pressure gauge and 3 port diverter valve. The Plus also benefits from an air/gas modulation system and has low NOx emissions.

The boiler is produced as a room sealed appliance suitable for wall mounting applications only. It is provided with a fan powered flue outlet with an annular co-axial combustion air intake which can be rotated through 360 degrees. A vertical & twin flue option is available.

The appliance is designed for use with a sealed heating system only and is not intended for use on an open vented system.

The provision of stored domestic hot water is possible by the addition of an indirect cylinder with 'S' or 'Y' plan controls.

An automatic range-rating facility is incorporated in the boiler for the central heating system in conjunction with the electronic burner modulation. The domestic hot water (dhw) service utilises a motorised control combined with a 3 port diverter valve to give hot water priority which also benefits from a preheat function.

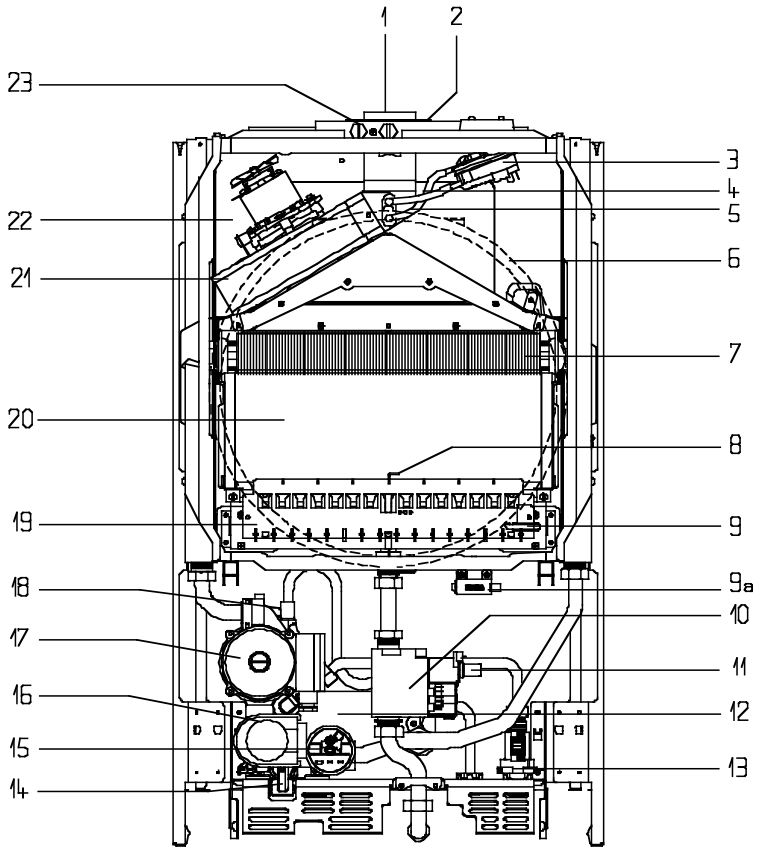

Fig.1 General Layout

1 Flue Outlet
2 Air Intake
3 Differential analog Pressure Switch (DAPS)
4 Silicone Pressure Tube
5 Silicone Negative Pressure Tube
6 Expansion Vessel
7 Main Heat Exchanger
8 Electrode
9 Burner Temperature control
9a Transformer
10 Gas Valve
11 Modulator Coil
12 Domestic Heat Exchanger
13 Domestic Hot Water Flow Switch
14 Safety Valve
15 Pressure Switch
16 Diverter Valve Motor
17 Pump
18 Automatic Air Release Valve
19 Main Burner
20 Combustion Chamber
21 Fan Assembly
22 Air Chamber (with front removed)
23 Flue Gas Analysis Test Point
24 Hot Water Temperature Control
25 Mode Selector Switch
26 Status LED
27 Temperature Indicator
28 Central Heating Temperature Control
29 Combustion Switch
30 Timeclock Aperture (optional)
31 Pressure Gauge

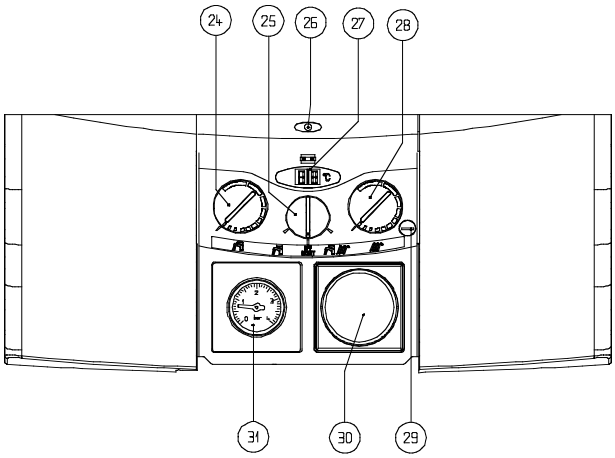

2.1 Fig.1 illustrates the general layout of components. Fig.2 illustrates the operating principles described below.

2.2 Central Heating Mode

2.2.1 When the various switches and controls impose a demand for heat, the pump is started. If the primary pressure is sufficient, the electronic circuitry is energised. The fan is started, the gas valve is energised at an intermediate rate and the electronic ignition goes through an ignition attempt.

2.2.2 The burner ignition is checked by the electronic circuitry to ensure correct ignition of the burner; once successful the gas will flow at 75% of maximum heat input for a period of approximately 15 minutes and then go to maximum heat input to maximise heating performance, unless the boiler nears optimum temperature where it will modulate down to suit system load.

2.2.3 As water temperature increases this is sensed by the temperature sensor on the flow pipe which modulates the fan and burner to match the heat output to the heat requirement of the system.

2.2.4 Depending on the load, either a) The water temperature will continue to rise and the fan and burner will continue to modulate down; The burner will switch off at maximum temperature, or b) the water temperature will fall; the fan and burner will return to a higher output to match demand.

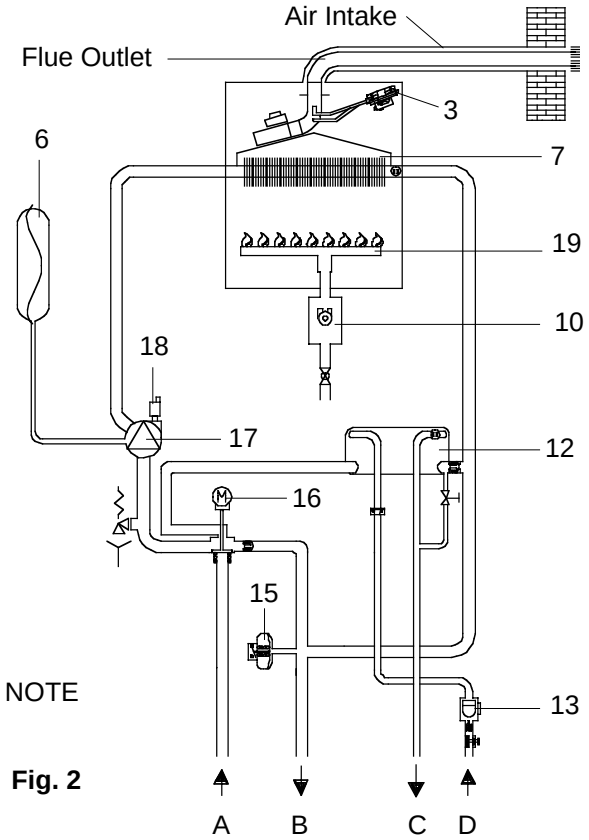

NOTE

Fig. 2

KEY:
A Central Heating Return.
B Central Heating Flow.
C Hot Water Outlet.
D Cold Water Inlet.

2.3 Domestic Hot Water Mode

2.3.1 The appliance incorporates a hot water preheat facility. The appliance will therefore ignite periodically to maintain heat within the appliance.

2.3.2 The appliance will operate in domestic hot water mode whenever the mode selector switch is on regardless of mode selector switch position and any demand for central heating.

2.3.3 The diverter valve will automatically energise into the hot water position after central heating demand, or will stay in the hot water position after hot water demand. Opening a draw off tap will energise the pump and fan sending primary water to the domestic hot water heat exchanger.

2.3.4 Temperature control is transferred to the domestic hot water thermostat (potentiometer) which modulates the fan and burner output between high and low flame to maintain an average heat input to suit the dhw output required.

2.3.5 An overrun is incorporated in the boiler in both c/h & dhw modes. The fan overruns until the boiler water cools to approximately 80°C (176°F).

2.4 Safety Devices

2.4.1 In both central heating and hot water modes safe operating is ensured by:

A. Differential pressure unit in the primary circuit which prevents burner operation if water pressure is too low.

B. An electronic device that checks the primary pressure unit for activation. Failure results in deactivation of the pump, after approximately 10 minutes of operation.

C. A safety thermostat, which interrupts the control circuit shutting off the gas valve. At the same time the fan will still operate.

D. A DAPS in the flue system to check the fan's operation before allowing ignition.

2.4.2 A safety valve is provided to relieve excess pressure from the primary circuit.

2.4.3 Frost Thermostat

The appliance has a built in frost protection circuit. Should the boiler temperature sensed at the primary thermistor fall below 5°C, the boiler will operate in central heating mode and continue to operate until the primary thermistor reaches approximately 40°C.

NOTE: Pressure switch.
Senses water pressure in the primary circuit and operates the pressure switch (15)

SECTION 3 TECHNICAL DATA

3.1 **Units** Dimensions and values are given in the preferred SI Units with Imperial units in brackets where applicable.

3.2 **Dimensions and Contents**

	Plus AG
Height	820mm (32.3)
Width	500mm (19.7)
Depth	355mm (14.0)
Weight dry	48kg (105.6lb)
Weight full	51kg (112.2lb)

Water content: 3 litres (.66 gals)
for further dimensions see figs 12 - 16

3.3 **Connection sizes**
Heating flow and return: Nut and olive for 22mm o.d. Cold water inlet: Nut and olive for 15mm o.d. Hot water outlet: Nut and tail for 15mm o.d. Gas Service: Nut and tail for 15mm o.d. Safety valve outlet: 15mm comp.or capillary

Flue outlet/Air inlet: nom dia 60/100mm specially supplied with boiler (concentric).
Flue outlet/Air inlet: nom dia 80/80mm specially supplied with boiler (twin).

3.4 **Installation Requirements**

3.4.1 **Clearances (Horizontal or Vertical Flue)** Minimum - above casing 225mm (9in) Minimum - below casing 200mm (8in) Minimum - In front 600mm (24in) Minimum - At sides 12mm (1/2in) from casing

3.4.2 Maximum heating system contents approx. 76.4 litres (16.8 gals). Acceptance capacity of expansion vessel 10 litres (2.2 gals).

3.4.3 Means of filling sealed system: to accord with BS and/or local Water Authority requirements.

3.4.4 The standard concentric horizontal flue allows a maximum length of duct as follows:
Rear flue: 700mm (wall thickness)
Side flue: 890mm (to centre line of boiler).

Using extension tubes the flue may be extended to the following lengths.

Concentric

	Plus AG
Horizontal	3.0m
Vertical	3.0m

Twin (+ concentric terminal)

	Plus AG
Horizontal	14/14m
Vertical	14/14m

The reduction in flue length for each bend used is listed opposite.

Concentric Flue

Bend	Reduction in flue length for each bend
45°	0.5 m
90°	1.0 m

Twin Flue

Bend	Reduction in flue length for each bend
45°	1.0 m
90°	1.0 m

3.5 **Electrical Details**
Mains supply 230v ~ 50Hz Fused 3A
Internal fuse rating F2A and T100mA
Power consumption:160W

3.6 **Performance and Limitations Plus AG**
Max. input 34.9 kW (119,080 Btu/h)(net h/w)
Max. inpu 38.7 kW (132.050Btu/h)(grossh/w)
Max. input 34.9 kW (119.080 Btu/h)(net c/h)
Max. input 38.7 kW (132.050Btu/h)(gross c/h)
Min. input 9.95 kW (34.052 Btu/h)(net)(c/h)
Min. input 9.95 kW (34.052 Btu/h)(net)(h/w)
Min. input 11.07 kW (37.770 Btu/h)(gross)(c/h)
Min. input 11.07 kW (37.770 Btu/h)(gross)(h/w)

Max. output 32.00 kW (109,200 Btu/h)(h/w)
Max. output 32.00 kW (109,200 Btu/h)(c/h)
Min. output 9.0 kW (30,700 Btu/h)(h/w)
Min. output 9.0 kW (30,700 Btu/h)(c/h)

Central heating output range
Max. 32.0 kW (109,200 Btu/h)
Min. 9.0 kW (30,700 Btu/h)

Nominal hot water production
Temp. rise of 30°C 15.3l/min.
Temp. rise of 35°C 13.1l/min.

Gas Pressures
Max. gas pressure 10.1 mbar h/w
Min. gas pressure 1.1 mbar h/w

Gas Rate
Max. 3.69m3/h 138.8 ft3/h (h/w)
Min. 1.05 m3/h 35.6 ft3/h (h/w)
Note: Use gross input values when gas rating the appliance

Burner Details Main burner:
Polidoro type Main burner injectors 16 x 1.35

3.7 **Working Pressure Heating System**
Maximum 1.5bar/15m w.g./50ft w.g.
Minimum 0.15bar/1.5m w.g./5ft w.g.
Safety valve setting 3bar/30m/102ft w.g.

3.8 **Flow Rates** Min. waterflow (dhw) 2.0l/min. (0.45 gal/min) Min central heating flow rate through appliance 350litres/hr (1.28 gal/min)

3.9 Working Pressure Hot Water System
Maximum 6.0 bar/90psig Minimum 0.6 bar/ 7psig

For LPG instructions see page 62.

3.10 Central Heating Pump Duty

Fig.3 indicates the flow rate available plotted against system pressure drop.

N.B. When using this graph apply only the pressure drop of the system. The curve has been modified to allow for the pressure drop through the appliance.

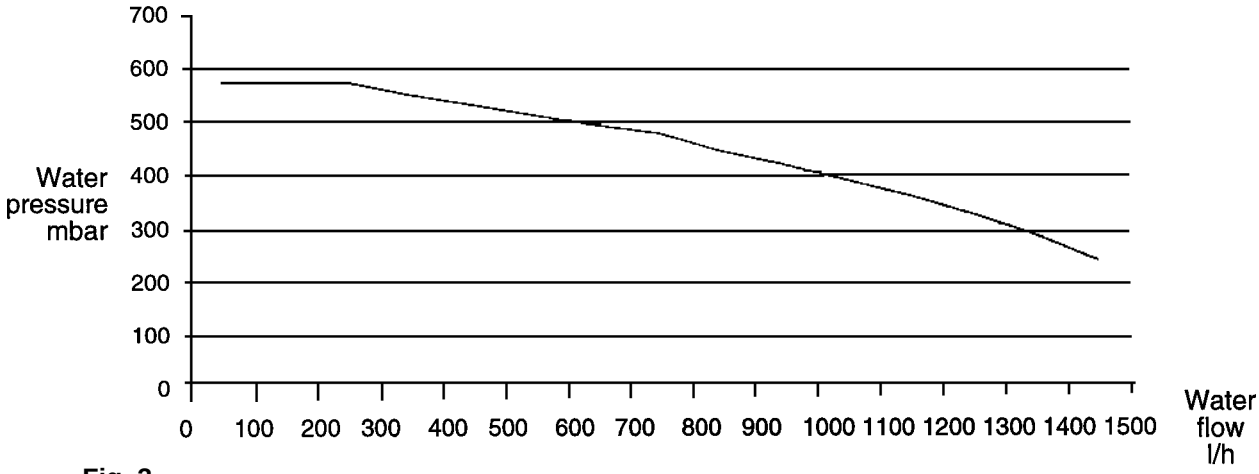

Fig. 3

4.0 General Requirements

This appliance must be installed by a competent person in accordance with the Gas Safety (Installation & Use) Regulations 1998.

4.1 Related Documents

The installation of this boiler must be in accordance with the relevant requirements of the Gas Safety (Installation & Use) Regulations 1998 the Local Building Regulations, the current I.E.E. Wiring Regulations, the by-laws of the local water undertaking, and in Scotland, in accordance with the Building Standards (Scotland) Regulation. In Ireland the local building regulations (IE).

It should be in accordance also with any relevant requirements of the local authority and the relevant recommendations of the following British Standard Codes of Practice:

BS 6891		1988	Low pressure installation pipes.
BS 6798		1987	Boilers of rated input not exceeding 60kW.
BS 5449	Part 1	1990	Forced circulation hot water systems
BS 5546		1990	Installation of gas hot water supplies for domestic purposes (2nd family gases).
BS 5440	Part 1	1990	Flues.
BS 5440	Part 2	1989	Flues & Ventilation.
BS 7074	Part 1	1989	Application, selection & installation of expansion vessels & ancillary equipment for sealed water systems.

4.2 Location of Appliance

The combination boiler may be installed in any room or internal space, although particular attention is drawn to the requirements of the current I.E.E. Wiring Regulations, and in Scotland, the electrical provisions of the Building Regulations applicable in Scotland, with respect to the installation of the combination boiler in a room or internal space containing a bath or shower.

Where a room-sealed appliance is installed in a room containing a bath or shower, any electrical switch or appliance control, utilising mains electricity, should be located in such a position that it cannot be touched by a person using the bath or shower.

The location chosen for the boiler must permit the provision of a satisfactory flue and termination. The location must also permit an adequate air supply for combustion purposes and an adequate space for servicing and air circulation around the boiler.

Where the installation of the boiler will be in an unusual location special procedures may be necessary and BS 6798:1987 gives detailed guidance on this aspect.

A compartment used to enclose the boiler must be designed and constructed specifically for this purpose. An existing cupboard or compartment may be used provided that it is modified for this purpose.

Details of essential features of cupboard/ compartment design including airing cupboard installations are given in BS 6798:1987. This appliance is not suitable for external installation.

4.3 Gas Supply

A gas meter is connected to the service pipe by the gas supplier.

An existing meter should be checked, preferably by the gas supplier, to ensure that the meter is adequate to deal with the rate of gas supply required for all appliances it serves.

Installation pipes should be fitted in accordance with BS 6891:1988.

Pipework from the meter to the boiler must be of adequate size. Pipes of a smaller size than the boiler inlet connection should not be used.

The complete installation must be tested for soundness as described in the above code.

N.B. If the gas supply for the boiler serves other appliances ensure that an adequate supply is available both to the boiler and the other appliance when they are in use at the same time.

4.4 Flue System

The terminal should be located where dispersal of combustion products is not impeded and with due regard for the damage or discoloration that might occur to building products in the vicinity (see fig 4).

The terminal must not be located in a place where it is likely to cause a nuisance.

In cold and/or humid weather water vapour may condense on leaving the flue terminal. The effect of such ‘steaming’ must be considered.

For protection of combustibles, refer to BS 5440:1 where the terminal is less than 2m (6.6ft) above a pavement or platform to which people have access (including any balcony or flat roof the terminal must be protected by a guard of durable material).

A suitable guard is available from Vokera Ltd. Part No 018, G.C. No. 301 106

This guard must be fitted centrally over the terminal. Mark the positions of the fixings, drill the wall and secure using wall plugs and 3 of 1˚" No.8 plated screws.

Fig. 4

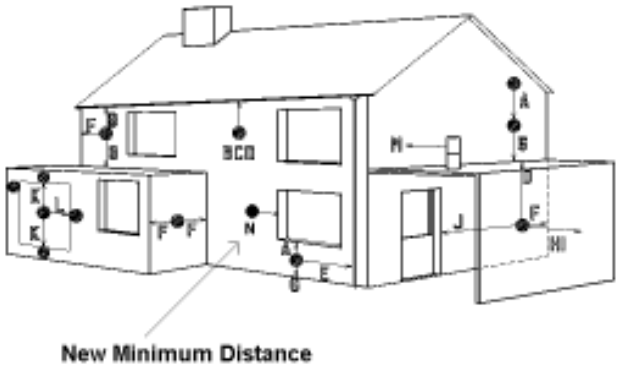

Terminal position for fan assisted boiler

(minimum distance)			mm
A	-	Directly below an open window or other opening (e.g. air brick)	300
B	-	Below gutters, soil pipes or drain pipes	25
C	-	Below eaves	25
D	-	Below balconies or car port roof	25
E	-	From vertical drain pipes and soil pipes	75
F	-	From internal or external corners	25
G	-	Above ground or below balcony level	300
H	-	From a surface facing a terminal	600
I	-	From a terminal facing a terminal	1200
J	-	From an opening in the car port (e.g. door window) into dwelling.	1200
K	-	Vertically from a terminal on the same wall	1500
L	-	Horizontally from a terminal on the same wall	300
M	-	Horizontally from a vertical terminal to a wall	300
N	**-**	**Horizontally from an opening, airbrick, openable window, etc.**	**300**

NOTE: The flue must be terminated in a place not likely to cause a nuisance.

4.5 Air Supply

The following notes are intended for general guidance.

The room sealed fan flued boiler does not require a permanent air vent for combustion air supply.

Where installed in a cupboard or compartment ventilation is not required.

4.6 Water Circulation (Central Heating)

Detailed recommendations are given in S6798: 1987 and BS 5449: 1: 1990 (for smallbore and microbore central heating systems).

4.6.1 The following notes are given for general guidance.

4.6.2 Pipework

Copper tubing to BS 2871:1:1971 is recommended for water pipe. Jointing should be either by capillary soldered or with compression fittings.

Where possible, pipes should have a gradient to ensure air is carried naturally to air release points and water flows naturally to drain taps.

It should be ensured as far as possible that the appliance heat exchanger is not a natural collecting point for air.

Except where providing useful heat, pipes should be insulated to prevent heat loss and to avoid freezing. Particular attention should be paid to pipes passing through ventilated spaces in roofs and under floors.

4.6.3 By-Pass

An automatic by-pass is incorporated in the boiler, but systems should be designed to ensure that with all radiators turned off a flow rate of at least 350 litres/hour (1.28 gals/min) is achieved through the system. See 6.9.4.

4.6.4 System Design

Figs 5 & 5a illustrates typical system layouts showing options of either, pipe connection from below as fig. 5, or pipe connection from above utilising the purpose made duct in the rear frame of the appliance.

4.6.5 Draining Taps

These must be located in accessible positions to permit the draining of the whole system. The taps must be at least 15mm nominal size and manufactured in accordance with BS 2879: 1980.

Fig. 5

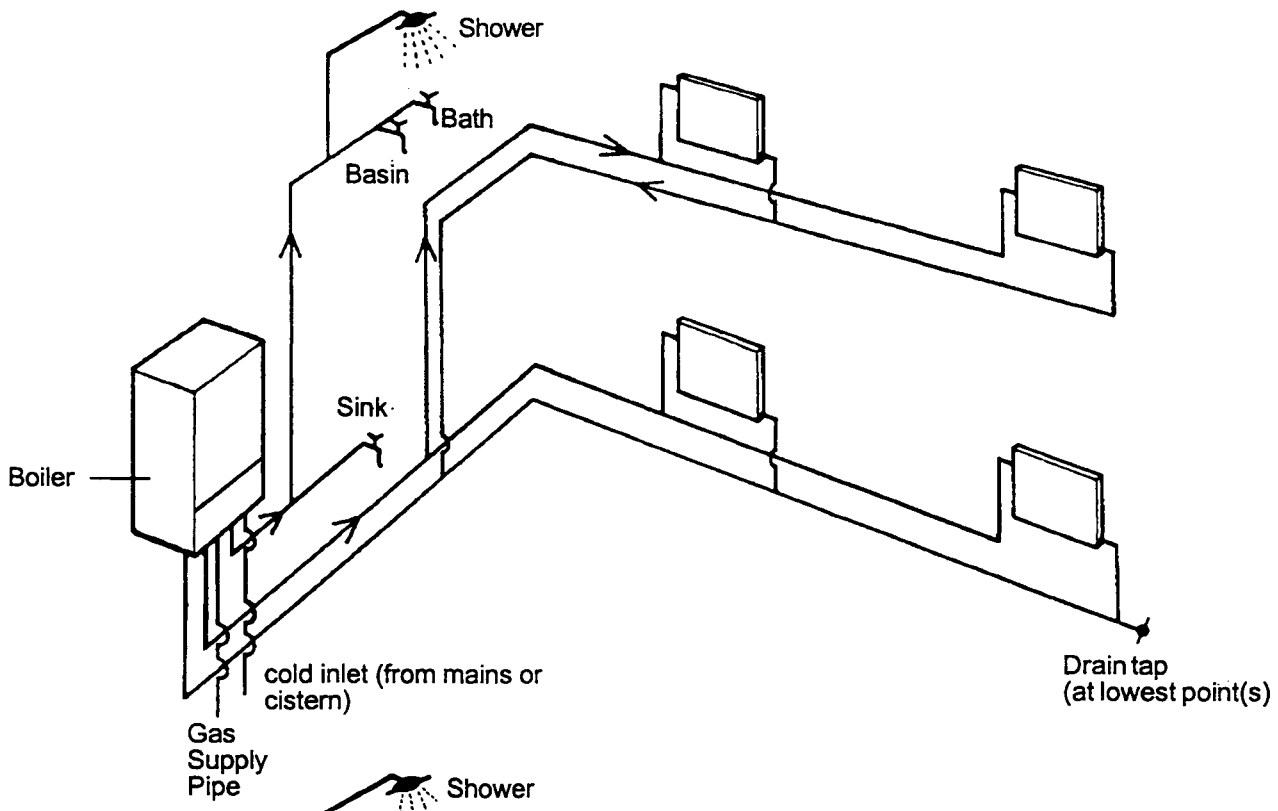

Fig. 5a

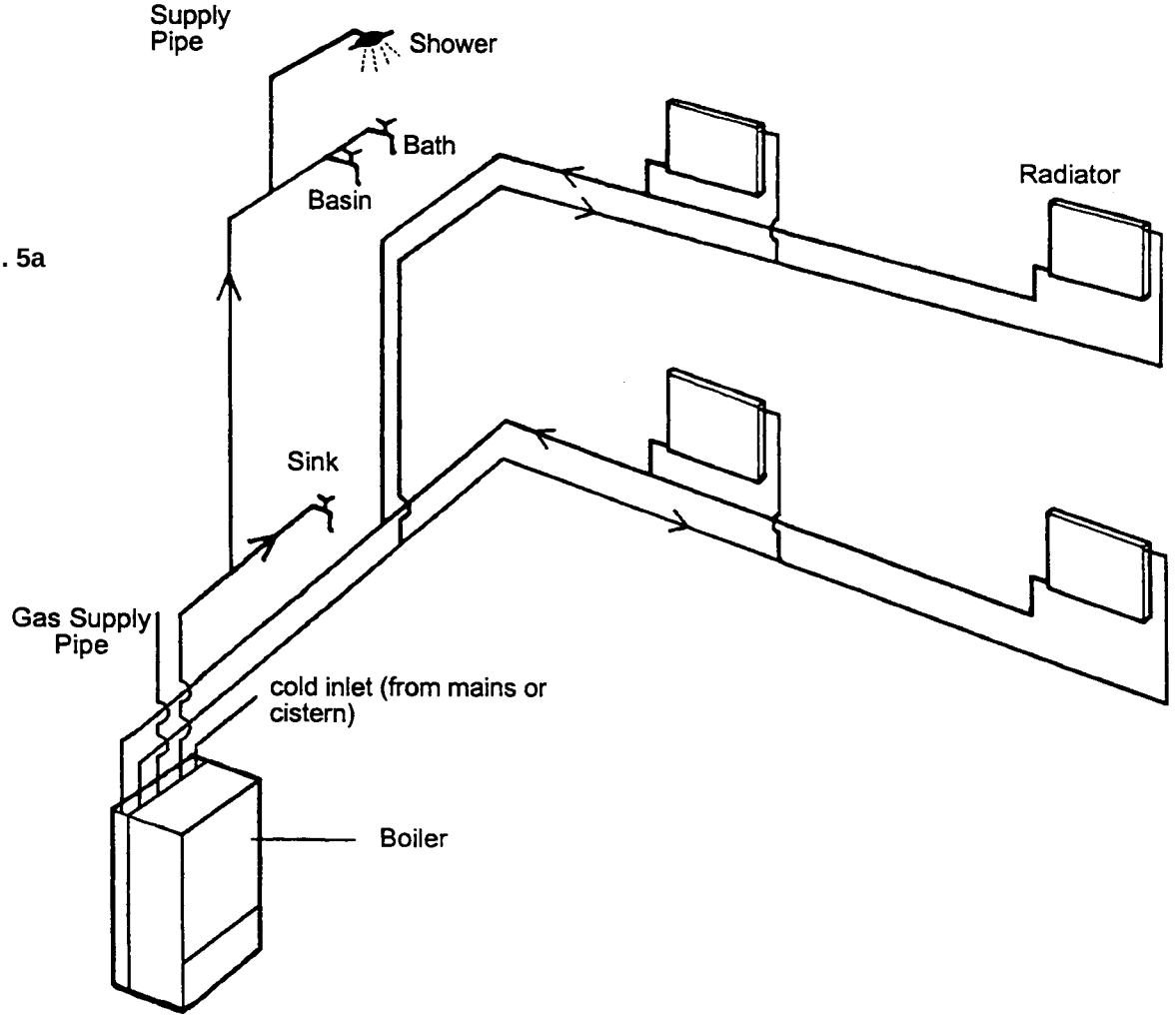

N.B. Vokèra Ltd recommend a 2-pipe system. Single pipe systems are more liable to be troublesome unless carefullly designed and installed.

4.6.6 Air Release Points

These must be fitted at all high points where air will naturally collect, and must be sited to facilitate complete filling of the system.

4.6.7 The appliance has an integral sealed expansion vessel to accommodate the increase of water volume when the system is heated. It can accept up to 10 litres of expansion water. If the appliance is connected to a system with an unusually high water content. Calculate the total expansion and add additional sealed expansion capacity as appropriate.

In general, modern systems will present no problem.

4.6.8 Filling Point

A method for filling the system and replacing water lost during servicing is provided on the appliance.

This method complies with the Water Supply (Water Fittings) Regulations 1999.

4.7 Electrical Supply

The appliance is supplied for operation on 230V ~ 50Hz electricity supply. It should be protected with a 3-amp fuse.

THIS APPLIANCE MUST BE EARTHED.

The method of connection to the mains electricity must allow complete isolation from the supply.

The preferred method is by using a fused double pole switch with a contact separation of at least 3mm.

The switch must supply ONLY the appliance and immediate electrical control circuits (e.g. programmer / room thermostat)

Alternatively, use an unswitched shuttered socket outlet with a fused 3-pin plug both complying with BS 1363.

4.8 Showers

If a shower control is to be supplied from the combination unit it should be of the type which incorporates a thermostatic control and by design is suitable for use with a combination boiler. Check application with shower manufacturer.

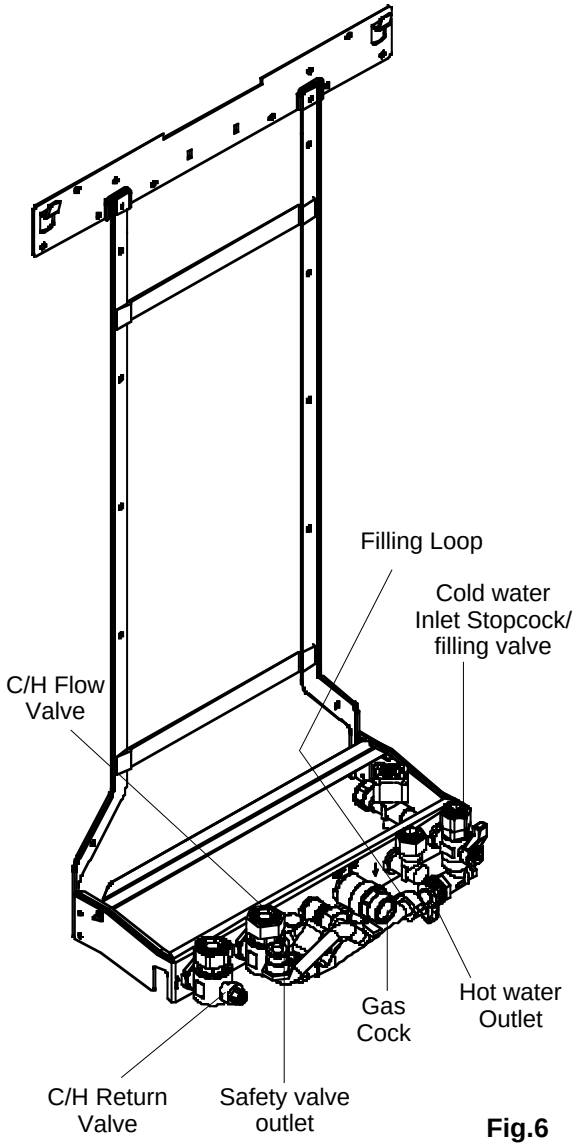

Fig.6

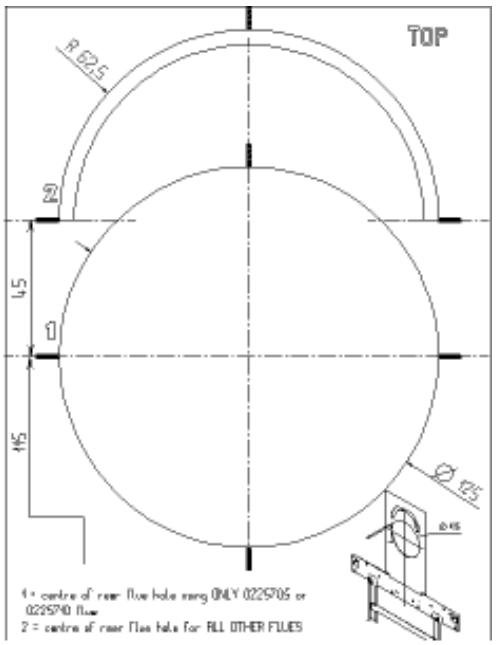

Fig. 7

Fig. 8

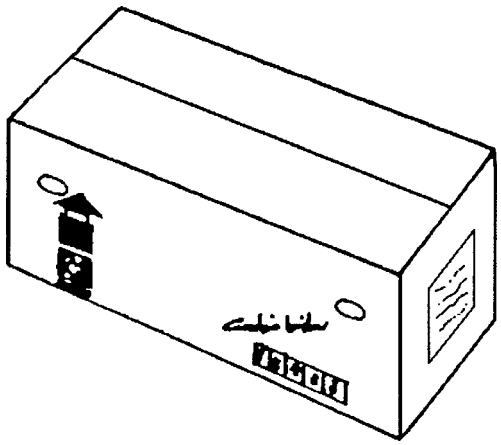

5.1 Delivery (fig. 8)

The appliance is delivered in a heavy duty cardboard carton.

Lay the carton on the floor with the writing the correct way up.

5.2 Unpacking (fig. 9)

Pull both sides of the top of the carton open. Do not use a knife. Remove the hanging bracket, literature pack and fittings pack, from the packaging. Remove the package supports.

Lift the appliance from the carton and lay the appliance down with the white frame on the floor.

Remove the protective bag, and the polystyrene support from the back of the appliance.

Do not remove the insulation jacket on the domestic heat exchanger.

Fig. 9

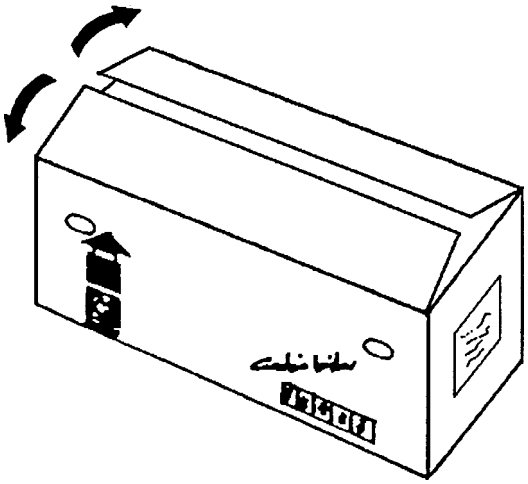

The fittings pack contains
Wiring harness for optional built in timer
15mm nut & olive
Adjustable stopcock
Safety valve outlet pipe (1)
Filling loop hose (1)
Various washers
Flue kit supplied in separate carton.

5.3 Preparing for Mounting

5.3.1 Push to release front door panel and lower to reveal controls. Loosen the 2 captive screws securing the front control panel to the lower part of the casing and lower to reveal inside of boiler (fig. 10).

5.3.2 Remove two screws at base of casing, slightly lift the casing and slide it gently towards the top of the appliance to disengage the case from the top suspension hooks (fig. 11).

5.3.3 Ensure the casing and screws are put to one side in a safe place.

Fig. 10

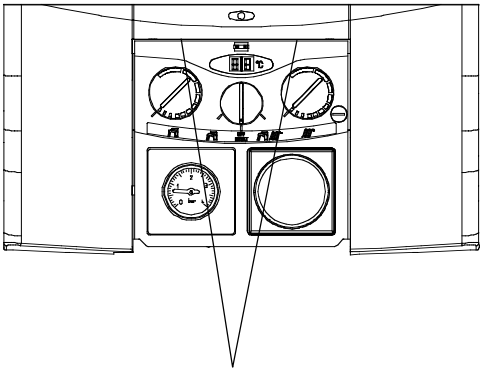

Fig. 11

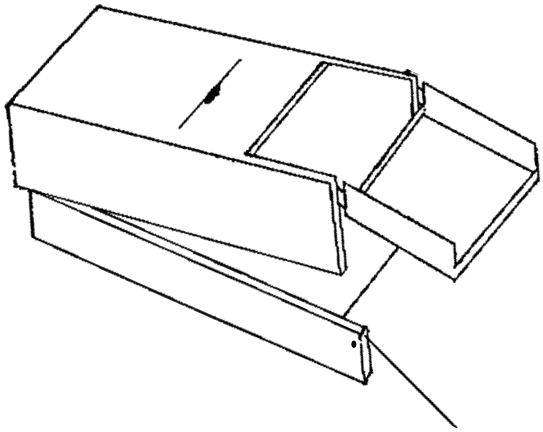

5.4 Mounting the appliance

The appliance should be mounted on a smooth, vertical surface, which must be capable of supporting the full weight of the appliance. Care should be exercised when determining the position of the appliance with respect to hidden obstructions such as pipes, cables, etc.

When the position of the appliance has been decided – using the template supplied – carefully mark the position of the fixing jig/mounting bracket assembly (see fig. 7) and flue-hole (if applicable).

5.4.1 Important

There are two holes on the template. The lower hole should be used with the telescopic flue kit (part no. 0225705 & 0225710). The upper hole is for use with all other horizontal flue kits.

5.4.2 Maximum flue lengths

Flue system	Linea Plus AG
Concentric Horizontal	3.0m
Concentric Vertical	3.0 m
Twin flue	14m/14m + terminal

5.5 Fitting the flue

The top flue outlet permits both horizontal and vertical flue applications to be considered, alternatively, the Vokera twin flue system can be utilised if longer flue runs are required.

5.5.1 Concentric horizontal flue

(For concentric vertical flue, see 5.5.2)
(For twin flue applications, see 5.5.3)
The appliance flue outlet elbow can be rotated through 360º on its vertical axis. In addition the flue may be extended from the outlet elbow in the horizontal plane (see 5.4.2), however if the flue is to be extended or additional bends are to be fitted, the standard horizontal flue kit (part no. 2359029) **must** be used. A reduction must also be made to the maximum length (see table) when additional bends are used.

Reduction for bends

Bend	Reduction in maximum flue length for each bend
45º bend	0.5 metre
90º bend	1.0 metre

Using the template provided (see 5.4.1), mark and drill a 125mm hole for the passage of the flue pipe. The hole should have a 1º drop from the boiler to outside, to eliminate the possibility of rainwater entering the appliance via the flue.

The fixing holes for the wall-mounting bracket & jig should now be drilled and plugged, an appropriate type and quantity of fixing should be used to ensure that the bracket is mounted securely. Once the bracket & jig has been secured to the wall, mount the appliance onto the bracket.

Horizontal flue terminals and accessories

Part No.	Description	Min-Max Length
0225705	Standard telescopic flue	380mm – 600mm (Dimension 'X')
0225710	Extended telescopic flue	600mm – 920mm (Dimension 'X')
2359029	Horizontal flue kit For use with add. Bends & extensions	833mm (Dimension 'X')
2359069	750mm extension	750mm
2359079	1500mm extension	1500mm
2359049	45º bend (pair)	N/A
2359059	90º bend	N/A
0225760	Wall bracket (5)	N/A

FITTING THE TELESCOPIC FLUE KIT (0225705 & 0225710)

Carefully measure the distance from the centre of the appliance flue outlet to the face of the outside wall (dimension 'X' see fig. 12). Add 50mm to dimension 'X' to give the overall flue length (dimension 'Y'). Using the complete telescopic flue assembly adjust the length to suit dimension 'Y'. Once the telescopic flue terminal has been adjusted to the correct length, secure the flue assembly with the screw supplied.

Insert the flue assembly into the previously drilled flue hole and locate the flue bend over the appliance flue outlet. Push the flue bend down over the appliance flue outlet and ensure the correct seal is made. Pull the flue assembly towards and over the flue bend – using a twisting action – ensuring the correct seal is made. Check that the terminal protrudes past the finished outside wall by the correct length (115mm).

NOTE

You must ensure that the entire flue system is properly supported and conncented.

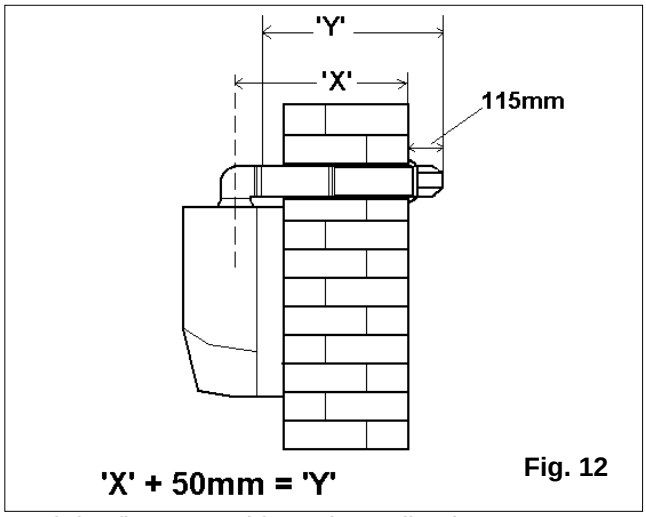

Fig. 12

Seal the flue assembly to the wall using cement or a suitable alternative that will provide satisfactory weatherproofing. The interior and exterior trim can now be fitted.

FITTING THE STANDARD (2359029) HORIZONTAL FLUE KIT (see 5.4.1)

Carefully measure the distance from the centre of the appliance flue outlet to the face of the outside wall (dimension 'X' see fig. 13). Ensure the inner (60mm) pipe is fully inserted into the outer (100mm) pipe (when the inner pipe is fully inserted, it stands proud of the outer pipe by 7.5mm). Add 32mm to dimension 'X' to give the overall flue lenghth (dimension 'Y')standard horizontal flue kit (part no. 2359029) is suitable for a distance (dimension 'Y') of up to 865mm.

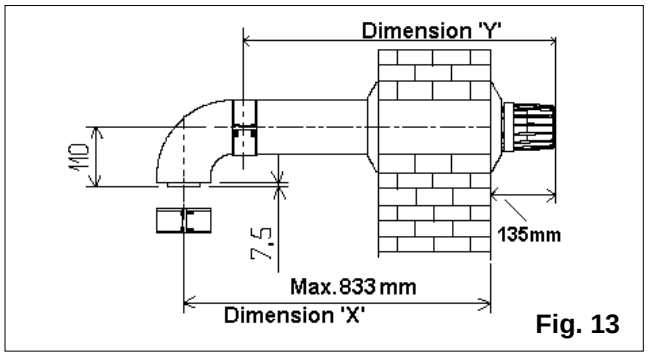

Fig. 13

NOTE
Dimension 'Y' is measured from the end of the terminal to the end of the outer (100mm) pipe. The internal trim should be fitted to the flue pipe before connection of the 90º bend.

If the horizontal flue kit (2359029) requires to be cut to the correct size (dimension 'Y'), you must ensure that the inner (60mm) pipe stands proud of the outer (100mm) pipe by 7.5mm (see fig. 13A). Ensure any burrs are filed or removed and that any seals are located properly before assembly.

Connect the inner (60mm) pipe of the terminal assembly to the push-fit end of the 90º bend (supplied) using a twisting action. Insert the assembled flue into the previously drilled hole. Using the clips & screws supplied, connect the flue assembly to the boiler, ensuring that the terminal protrudes past the finished outside wall by the correct length (135mm).

You must ensure that the entire flue system is properly supported and connected.

Seal the flue assembly to the wall using cement or a suitable alternative that will provide satisfactory weatherproofing. The exterior trim can now be fitted.

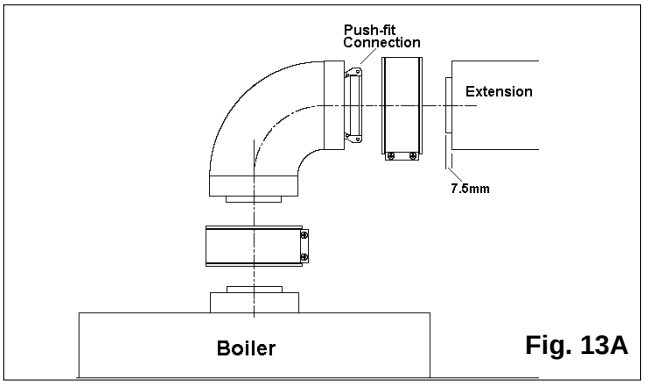

Fig. 13A

EXTENDING THE HORIZONTAL FLUE

If the horizontal flue requires extension/s or additional bend/s, the horizontal flue terminal kit (2359029) must be used. Connect the bend – supplied with the terminal kit – to the top of the boiler using the clips, screws, & gaskets supplied. The additional bends & extensions have an internal push-fit connection, care should be taken to ensure that the correct seal is made when assembling the flue system. Connect the required number of flue extensions or bends (up to the maximum equivalent flue length) to the flue terminal using the clips, screws, & gaskets supplied (see fig. 13 & 13A).

NOTE
When cutting the horizontal flue terminal or an extension to the required length, you must ensure that the excess is cut from the plain end of the terminal or extension, and that the inner (60mm) pipe is 7.5mm longer than outer (100mm) pipe (see fig. 13 & 13A). Remove any burrs, and check that any seals are located properly.

You must ensure that the entire flue system is properly supported and connected.

Seal the flue assembly to the wall using cement or a suitable alternative that will provide satisfactory weatherproofing. The interior and exterior trim can now be fitted.

5.5.2 CONCENTRIC VERTICAL FLUE

The vertical flue terminal can be connected directly to the appliance flue outlet. Alternatively, an extension or bend can be connected to the appliance flue outlet if desired (see 5.4.2), however if additional bends are fitted, a reduction must be made to the maximum flue length (see table below).

Reduction for bends

Bend	Reduction in maximum flue length for each bend
45º bend	0.5 metre
90º bend	1.0 metre

Vertical flue terminal and accessories

Part No.	Description	Length
2359039	Vertical flue terminal	1.0 metre
0225770	Pitched roof flashing plate	N/A
0225765	Flat roof flashing plate	N/A
2359069	750mm extension	750mm
2359079	1500mm extension	1500mm
2359049	45º bend (pair)	N/A
2359059	90º bend	N/A
0225760	Wall bracket (5)	N/A

Using the dimensions given in fig. 14 as a reference, mark and cut a 105mm hole in the ceiling and/or roof.

Fit the appropriate flashing plate to the roof and insert the vertical flue terminal through the flashing plate from the outside, ensuring that the collar on the flue terminal fits over the flashing.

The fixing holes for the wall-mounting bracket & jig should now be drilled and plugged, an appropriate type and quantity of fixing should be used to ensure that the bracket is mounted securely. Once the bracket has been secured to the wall, mount the appliance onto the bracket & jig.

IMPORTANT
The vertical flue terminal is 1.0 metre in length and cannot be cut; therefore it may be necessary to adjust the height of the appliance to suit or use a suitable extension.

Remove or discard the flue restrictor ring from the appliance flue outlet (see fig. 1), if the total flue length – including the allowance for any additional bends – exceeds 1.0 metre.

Connect the vertical flue assembly to the boiler flue spigot using the 60mm & 100mm clips, gaskets, & screws (supplied), ensuring the correct seal is made. The flue support bracket (supplied with the vertical flue kit) can now be fitted.

If the vertical flue requires extension/s or additional bend/s, connect the required number of flue extensions or bends (up to the maximum equivalent flue length) between the boiler and vertical flue assembly (see fig. 13A).

NOTE
When cutting an extension to the required length, you must ensure that the excess is cut from the plain end of the extension and that the inner (60mm) pipe is 7.5mm longer than outer (100mm) pipe (see fig. 13A). Remove any burrs, and check that any seals are located properly.

You must ensure that the entire flue system is properly supported and connected.

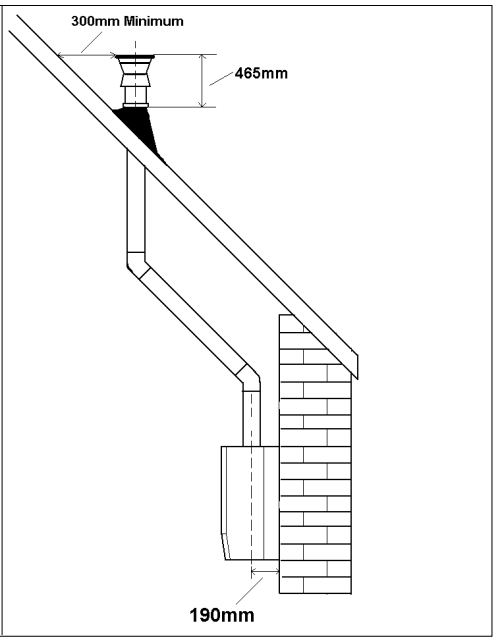

Fig. 14

5.5.3 TWIN FLUE SYSTEM

The Vokera twin flue system enables greater flue distances to be achieved (see 5.4.2) than that of the standard concentric flue system. It can be used for horizontal or vertical applications, however the twin flue system must be converted to the dedicated concentric flue kit for termination. It is essential that the installation of the twin flue system be carried out in strict accordance with these instructions.

GUIDANCE NOTES ON TWIN FLUE INSTALLATION

- The flue must have a fall back of 1º back to the appliance to allow any condensate that may form in the flue system to drain via the condensate drain. Consideration must also be given to the fact that there is the possibility of a small amount of condensate dripping from the terminal.
- Ensure that the entire flue system is adequately supported, use at least one bracket for each extension.
- The entire flue system must be adequately insulated to maintain heat within the flue system thereby reducing the possibility of condensate production.

As the exhaust outlet pipe can reach very high temperatures it must be protected to prevent persons touching the hot surface.

Reduction for bend

Bend	Reduction in maximum flue length for each bend
45º bend	1.0 metre
90º bend	1.0 metre

Twin flue accessories

Part No.	Description	Length
0225805	Horizontal flue terminal	1.0 metre
0225810	Vertical flue terminal	1.0 metre
300	Twin adapter kit	N/A
0225770	Pitched roof flashing plate	N/A
0225765	Flat roof flashing plate	N/A
0225815	Condensate drain kit	N/A
0225820	0.25m extension (pair)	250mm
0225825	0.5m extension (pair)	500mm
0225830	1.0m extension (pair)	1000mm
0225835	2.0m extension (pair)	2000mm
0225840	45º bend (pair)	N/A
0225845	90º bend (pair)	N/A
0225850	Twin bracket (5)	N/A
0225855	Single bracket (5)	N/A

Mounting the boiler

The fixing holes for the wall-mounting bracket & jig should now be drilled and plugged, an appropriate type and quantity of fixing should be used to ensure that the bracket is mounted securely. Once the bracket has been secured to the wall, mount the appliance onto the bracket & jig.

5.5.3.1 Installation of twin adaptor kit (fig. 15)

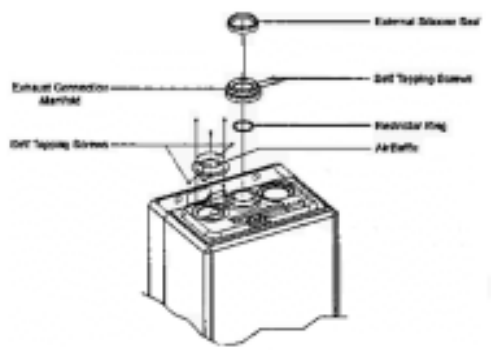

Fig. 15

- Remove or discard the flue restrictor ring from the appliance flue outlet (see fig. 1).
- Insert the small restrictor ring (supplied with the twin adapter kit) **if** the total flue length – including the allowance for any bends – is less than 8 metres.
- Insert the exhaust connection manifold onto the appliance flue outlet.
- Place the silicone seal (supplied with twin adapter kit) over the rim of the exhaust connection manifold.
- Remove one of the blanking plates (located to the left & right of the appliance flu
- Remove one of the blanking plates (located to the left & right of the appliance flue outlet) and – using the same screws – install the air baffle.

5.5.3.2 Installation of condensate drain kit (fig. 16)

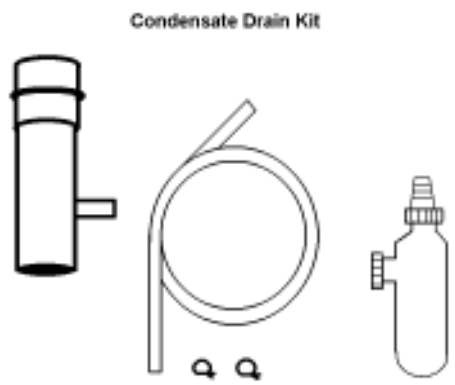

Fig. 16

The condensate drain kit must be fitted within 1 metre of the appliance flue outlet. It is recommended that the condensate drain kit should be fitted in the vertical plane, however it can be fitted horizontally with care.

- Fit the first bend to the condensate drain kit or exhaust connection manifold by firmly pushing in to position.
- Using the two holes in the exhaust connection manifold as a guide, drill a 3mm hole in each and secure using the screws provided.
- Connect the air inlet pipe to the air baffle as above.
- The twin flue pipes extensions and accessories can now be installed by pushing together (the plain end of each extension or bend should be pushed approximately 50mm into the female socket of the previous piece).

The condensate drain trap must be connected to the drain in accordance with Building Regulations or other rules in force

5.5.3.3 Horizontal termination (fig. 17)

The twin flue system must be converted to the dedicated concentric flue kit for termination.

- The horizontal terminal is supplied with a built-in converter box and cannot be shortened.

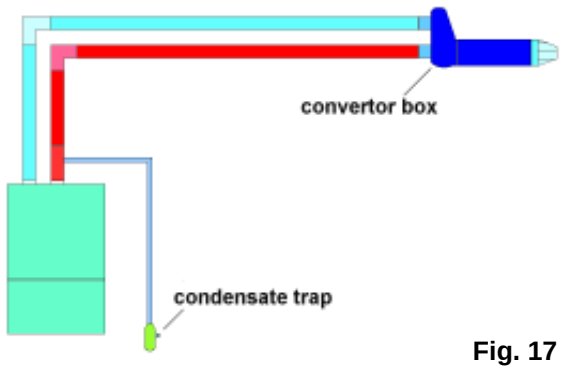

Fig. 17

- A 130mm hole is required for the passage of the concentric terminal through the wall.

Depending on site conditions it may be preferable to install the terminal assembly prior to fitting the twin flue pipes.

Mark and drill a 130mm hole for the passage of the horizontal flue terminal, ensuring that there is a 1º fall back to the boiler (17mm per 1000mm). Insert the terminal assembly into the flue hole.

Push-fit the twin flue pipes onto the concentric to twin converter ensuring that the exhaust pipe connects to the exhaust connection on the concentric to twin converter.
If necessary cut the plain ends (male) of the twin flue pipes to allow connection to the concentric to twin converter.

NOTE

- Before cutting twin flue pipes ensure allowances have been made for connection onto the previous piece and onto the concentric to twin converter. The last twin flue pipes must be pushed 50mm onto the male spigots of the concentric to twin converter.

NOTE

You must ensure that the entire flue system is properly supported and connected.

When cutting an extension to the required length, you should ensure that the excess is cut from the plain end of the extension. Remove any burrs, and check that both seals are located properly.

Seal the flue terminal assembly to the wall using cement or a suitable alternative that will provide satisfactory weatherproofing. The interior and exterior trim can now be fitted.

5.5.3.4 Vertical termination (See fig. 18)

The twin flue system must be converted to the dedicated concentric flue kit for termination.

- The vertical terminal is supplied with a built-in converter box and cannot be shortened.
- A 130mm hole is required for the passage of the concentric terminal through the ceiling and/or roof.

Depending on site conditions it may be preferable to install the terminal assembly prior to fitting the twin flue pipes.

Fit the appropriate flashing plate to the roof and insert the vertical flue terminal through the flashing plate from the outside, ensuring that the collar on the flue terminal fits over the flashing.

Push-fit the twin flue pipes onto the concentric to twin converter ensuring that the exhaust pipe connects to the exhaust connection on the concentric to twin converter.
If necessary cut the plain ends (male) of the twin flue pipes to allow connection to the concentric to twin converter.

NOTE

- Before cutting twin flue pipes ensure allowances have been made for connection onto the previous piece and onto the concentric to twin converter. The last twin flue pipes must be pushed 50mm onto the male spigots of the concentric to twin converter.

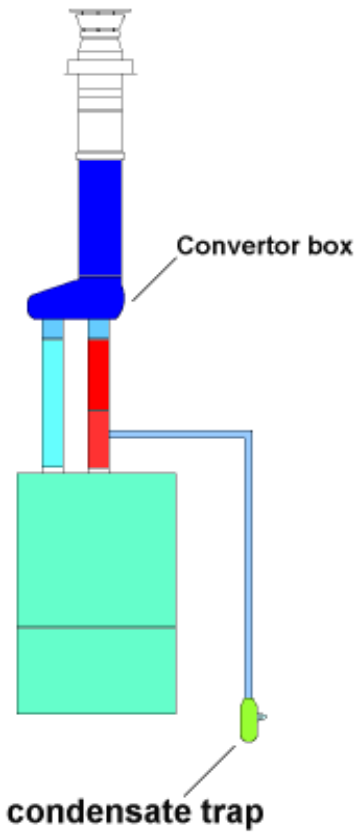

Fig. 18

- You must ensure that the entire flue system is properly supported and connected.
- Ensure that any horizontal sections of pipe have a 1º fall towards the appliance (17mm per 1000mm).
- The convertor box on the vertical terminal will have to be temporarily removed when inserting the terminal through the flashing.
- The condensate trap must be primed with water prior to commissioning the boiler.
- The condensate drain trap must be connected to the drain in accordance with building regulations or other rules in force.

5.6 Connecting the Gas and Water

5.6.1 Figs. 6 and 15 show the locations of the fittings.

5.6.2 Do not over tighten nuts, use another spanner to apply counter force to avoid damaging the appliance

5.6.3 Gas Supply
Connecting the gas supply.

Connect a 15mm gas pipe to the gas service tap and tighten the union nut securing the tap to the appliance.

Pipework from the meter to the appliance must be of adequate size.

A minimum gas pressure of 20mb (8 in. w.g.) must be available at the appliance inlet at full flow rate. See section 3.

DO NOT use pipes of a smaller size than the appliance inlet connection.

5.6.4 Central Heating
Connect the central heating pipework (22mm o.d) to the respective valves, right hand: flow, left hand: return, and tighten the nuts.

5.6.5 Hot Water
Connect a 15mm pipe to the hot water outlet connection of the appliance. Tighten the nut.

If the hot water system does not include a tap below the hot water outlet connection, provide a suitable drain tap to permit draining of the appliance hot water side during servicing.

5.6.6 Cold Water
Connect a 15mm cold water service pipe to the inlet stopcock of the appliance. Tighten the nut.

If the cold water supply is liable to high pressure or large pressure fluctuations, a flow/pressure regulator should be fitted in the supply pipe.

Should the appliance be subject to 'mains knock' it would be advisable to install an non return valve in the hot water outlet pipe to prevent unnecessary activation of the domestic flow switch.

5.6.7 Safety Valve Discharge
Connect a 15mm pipe to the discharge outlet of the appliance.

The discharge should terminate facing downwards outside the building in a position where discharging (possibly boiling) water will not create danger or nuisance; but in an easily visible position.

5.7 Electrical Connections

5.7.1 The electricity supply must be as specified in 4.7. If controls external to the appliance are required, design of the external electrical circuits should be undertaken by a competent person.

See Section 10 for further advice.

N.B. IT IS ESSENTIAL THAT ALL EXTERNAL CONTROL CIRCUITS AND WIRING IS WIRED FROM THE SAME ELECTRICAL ISOLATOR AS SERVES THE APPLIANCE.

Factory fitted internal wiring must not be disturbed when wiring external controls.

5.7.2 To gain access to the electrical terminals
Remove electrical cover by releasing four securing screws. Fig.18.

The mains input terminal block is now easily visible (see fig. 18a).

5.7.3 The electricity supply cable from the isolator and the appliance terminal block must be 3 core flexible sized 0.75mm˝ (24 x 0.2mm) to BS6500.

Wiring to the appliance should be rated for operation in contact with surfaces up to 90°C.

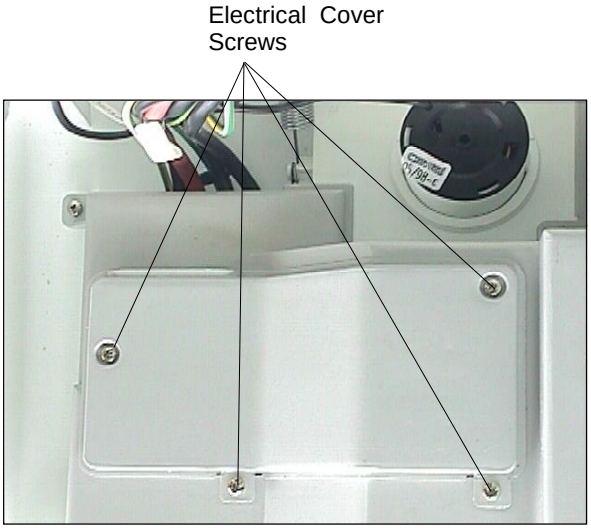

Fig. 18

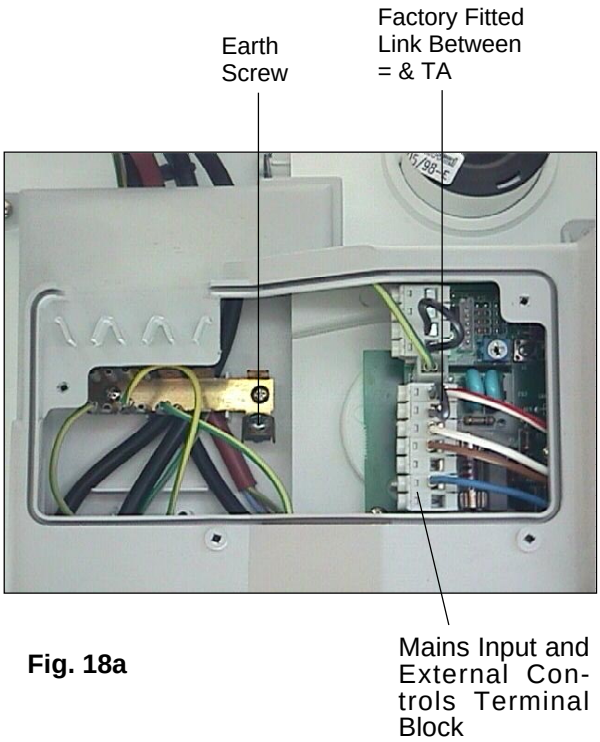

Fig. 18a

5.7.4 Pass the cable through one of the cord anchorage points and connect the wires Brown to L, Blue to N, and Green/Yellow to ⏚ . Arrange the cable so that should the cable slip the anchorage the current carrying conductors become taut before the earthing conductor.

5.7.5 Securely tighten all terminal screws and arrange the cable with slack between the cable anchor and the terminal block. Tighten the cord anchorage screw until the cable is secure.

5.7.6 Neatly arrange the external cable in such a way that unrestricted opening of the controls fascia is possible without strain on the cable.

5.7.7 External controls may be wired from terminals TA to TA after removing the factory fitted link (see fig. 18 & pages 49 - 52 for further details). If a neutral is needed use the terminal marked N on the terminal strip.

DO NOT CONNECT ANY WIRES TO THE TERMINAL STRIP MARKED 'S' '-' 'POS' 'POS'

When connecting wires to the terminal strip it is possible to remove the terminal strip from the circuit board: Grasp the terminal strip firmly and slide up to clear pcb. See fig.21.

When refitting the terminal strip it is important that it is replaced correctly (with the screws facing left).

Section 10 gives details of fitment for external and internal controls (ie Vokera time clock).

If required pass the external controls cable through the spare cord anchorage and arrange the cable so that should the cable slip the anchorage the current carrying conductors become taut before the earthing conductor.

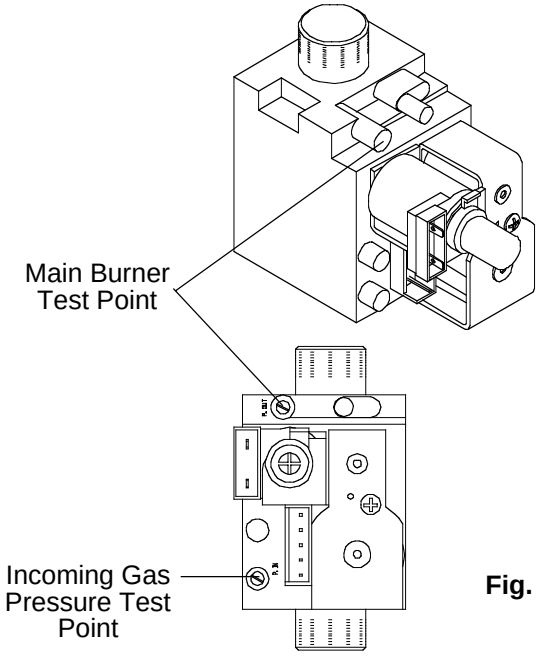

Fig. 19

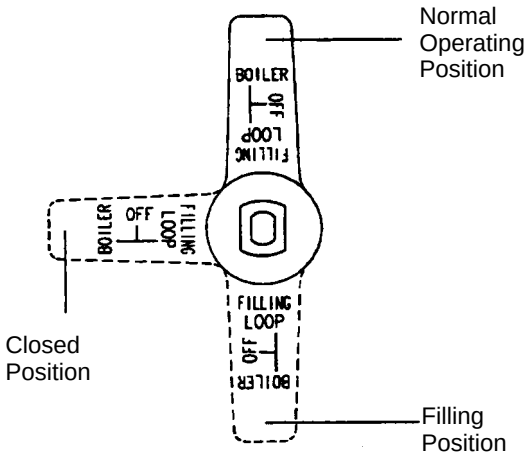

Fig. 20

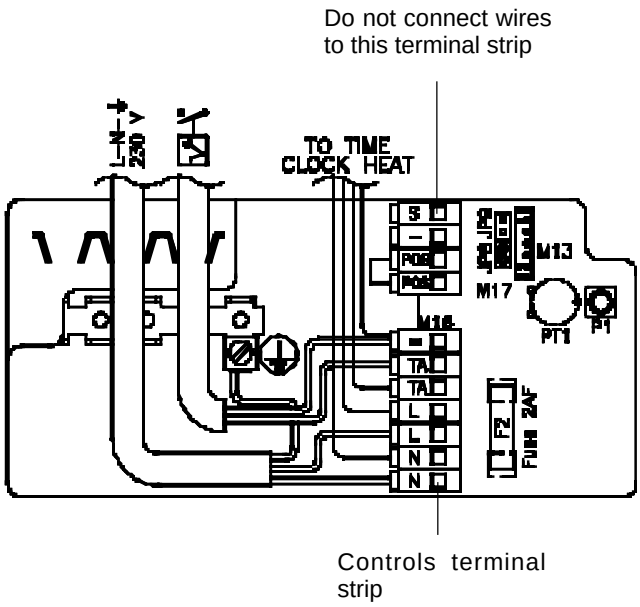

Fig. 21

6.1 Where the text bears identifying numbers in brackets, refer to figs. 1 and 2 unless otherwise instructed.

6.2 Gas Supply Installation
Inspect the entire installation including the meter. Test for soundness and purge, all as described in BS6891:1988.

6.3 Central Heating Systems

6.3.1 **IMPORTANT** DO NOT RELEASE AIR FROM THE RED SEALED EXPANSION TANK. It is charged with air at the factory from .75 - .80 bar (11 - 12psig)

6.3.2 Initial filling of the System

6.3.2.1 See 3.4.3.

6.3.2.2 Open central heating flow and return valves. Unscrew black cap on automatic air release valve (18) one full turn. (Leave open permanently).

6.3.2.3 Close all air release taps on the central heating system.

6.3.2.4 Identify the filling/inlet valve found at the base of the appliance. See fig.6.
The filling loop may have been disconnected from the filling/inlet valve and heating flow valve. If so reconnect unscrewing the caps as necessary.
The filling/inlet valve has 3 positions. (Fig. 20)
i) Vertically up - normal operating position.
ii) Turn to the left to horizontal - closed position.
iii) Vertically down - Filling position. To fill, slowly turn the handle of the filling/inlet valve from the closed position towards the filling position. Mains water will be heard to enter the system/boiler. As the water enters the system/boiler the pressure gauge will be seen to rise. Pressurise to between 1bar & 1.5bar when the system is cold. DO NOT OVERPRESSURISE.
Once the desired pressure is achieved turn the filling/inlet valve back to the closed position.

6.3.2.5 Starting with the lowest radiator open each air release tap in turn closing it only when clear water, free of bubbles, flows out. In the same way release air from any high points in the pipework.

6.3.2.6 Continue filling the system until at least 1.0 bar registers on the gauge then turn the handle of the filling/inlet valve back to the closed position.

6.3.2.7 Inspect the system for water soundness and remedy any leaks discovered.

6.3.3 Initial flushing of Pipework

The whole of the heating system must be flushed both cold and later hot as detailed in 6.10. Open all radiator or heating valves and the appliance central heating valves. Drain the boiler and system from the lowest points. Open the drain valve full bore to remove any installation debris from the boiler prior to lighting. Refill the boiler and heating system as described in 6.3.2

6.3.4 Setting the System Design Pressure

6.3.4.1 The design pressure should be a minimum of 1 bar and maximum 1.5 bar.

6.3.4.2 The actual reading should ideally be 1 bar plus the equivalent height in metres to the highest point of the system above the base of the appliance. (Up to the maximum of 1.5 bar total).

N.B. The safety valve is set to lift at 3bar/ 30m/ 45psig.

6.3.4.3 To lower the system pressure to the required value, pull lever on head of safety valve (14) a quarter turn to release water until the required figure registers on the gauge (31).

6.3.5 Filling the Hot Water System

6.3.5.1 Close all hot water draw-off taps.

6.3.5.2 Turn filling/inlet valve to the normal operating position (vertically up). See fig. 20

6.3.5.3 Slowly open each draw-off until clear water is discharged.

6.4 Checking Electricity Supply

6.4.1 Carry out preliminary checks for continuity, polarity, and resistance to earth (see page 61), gaining access as required according to 5.7.2 in this manual.

6.4.2 Leave the appliance with the control fascia closed and with the mains electricity switched OFF

6.5 Lighting the Boiler

6.5.1 Ensure flow and return valves are open. (6.3.2.1)

If external and/or internal controls are fitted (e.g Timeclock and/or Room thermostat) ensure they 'call for heat'. The commissioning of the appliance may be easier if the external/ internal controls are disconnected and terminals TA & TA are linked. (For access procedure turn off electricity and refer to 5.7.2 for instructions).

6.5.2 Switch on the mains electricity and turn the on / off / mode switch (25) to

6.5.3 Set the c/h control knob (28) to the highest setting.

6.5.4 The appliance will go through an ignition sequence and the burner will light.

6.5.5 If during the ignition attempt period (10 secs approx.) the boiler fails to light, the ignition control circuit will go to lockout. This is indicated by the status LED (26) flashing red accompanied by a flashing error code **01** shown in the temperature indicator (27). The gas valve is de-energised, but leaves the fan and pump running for approximately 2 minutes after lockout.

6.5.5 In the event of the boiler going to lockout turn the mode selector switch to the reset position for approximately 10 seconds, then back to the original position. The two main causes of the boiler going to lockout during commissioning are electrical supply polarity reversed, or air in the gas supply. Check polarity and that the gas supply is completely purged of air, and that gas is reaching the boiler, then repeat from 6.5.2.

6.6 Checking Burner Pressures

6.6.1 The heat inputs for high and low gas rates are factory set to the maximum values given in section 3.6 for domestic hot water and central heating but it is necessary to check them when commissioning.

6.6.4 Turn off the main electricity supply. Gain access to the interior as instructed in 5.7.2.

6.6.5 Locate the main burner pressure test point (fig. 19) and slacken the screw half a turn in an anti clockwise direction. Attach a suitable U gauge tube between the test nipple and manometer (see fig. 22).

IMPORTANT: Before measuring gas pressures it is imperitive that the protective cover over the gas valve adjustment screw is removed (fig. 31).

Turn on electricity supply and fully open a domestic hot water tap to operate boiler in dhw mode. Adjust hot water control knob to it's maximum setting.

6.6.6 The pressure reading for maximum rate should be:

Plus AG (N/G)
10.1 mbar
(plus or minus 1mbar)

If the pressure is wrong it should be adjusted as instructed in 8.23 (N.B. Whenever the maximum rate is adjusted, check and adjust the minimum rate too).

6.6.7 Turn off the electricity supply and remove one of the grey wires connecting to the modulator coil on the front of the gas valve. Switch on the electricity supply. The boiler will now light at the minimum setting.

6.6.8 When low flame is established, the pressure reading should be:

Plus AG (N/G)
1.1 mbar
(plus or minus 0.11 mbar)

If it is different adjustment should be made in accordance with the instructions in 8.23.

6.6.9 Turn off the electricity supply and replace the wire onto the modulator coil.

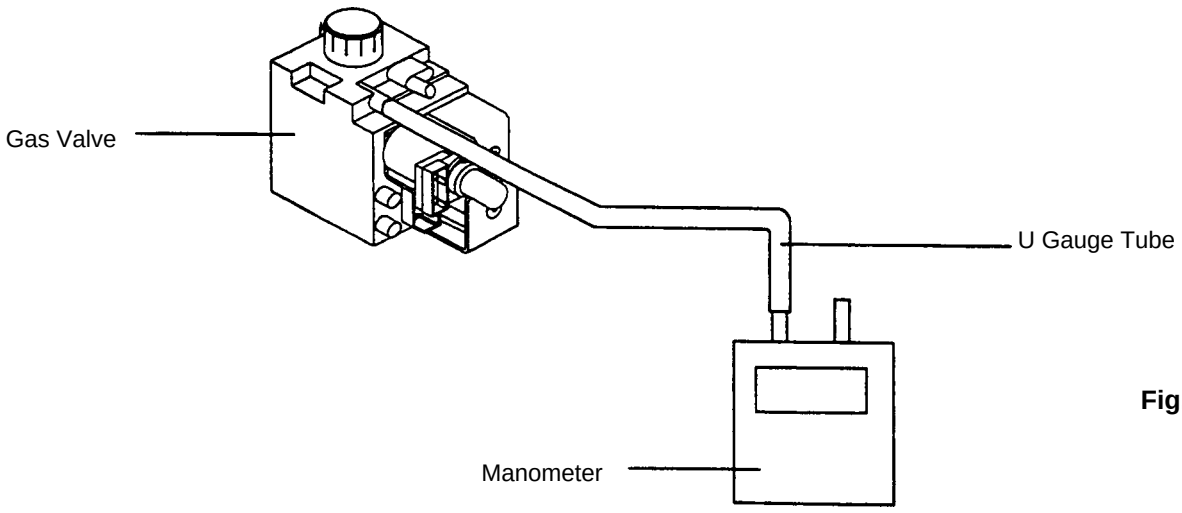

Fig. 22

6.6.10 Setting the Maximum Rate for Central Heating

The maximum heat input for the central heating mode is not adjustable. When central heating is selected the appliance will light at 75% of maximum heat input for a period of approximately 15 minutes, whereupon the appliance will burn at maximum rate. Should the appliance reach temperature during the 15 minute period the burner will modulate further to suit system load.

6.7 Checking the Flue System

6.7.1 The flue system should be visually checked for soundness. Check all clamps and fixings are secure and tight.

6.8 Checking the Heating Thermistor

6.8.1 Allow the system to warm up and manipulate the c/h control knob to ensure that the burner modulates between 'high' and 'low' and then to 'off' and vice versa (scale range covers approx. 45° - 85°C).

6.9 Regulating the Central Heating System

6.9.1 Fully open all radiator and circuit valves and run the appliance in the central heating mode until heated water is circulating. If conditions are warm, remove any thermostatic valve heads.

6.9.2 If the burner will not light, ensure that water is in fact circulating. See 4.6.3

6.9.3 Adjust radiator return valves and any branch circuit return valves until the individual return temperatures are correct and are approximately equal.

6.9.4 When all is adjusted, progressively close all radiator valves to ensure that the appliance still operates when flow through the system is limited.

If the burner cuts out prematurely due to lack of water pressure through the appliance, the system should be regulated to ensure a flow rate of at least 350 litres/h (78 gals/h). This may mean the addition of a small manual by-pass being fitted to the system if a fully TRV system is used.

6.10 Final Flushing of the Heating System

6.10.1 The system should be flushed in accordance with BS 7593: 1992.Turn on the boiler for central heating and allow the boiler and system to reach temperature. Turn off the boiler and drain the system whilst still hot.

Refill the boiler and heating system as described in 6.3.2.

Although not necessary for correct operation of the boiler, an inhibitor may be added at this point. Contact the inhibitor manufacturer for further information concerning application and dosage.

6.10.2 Inspect the system for soundness. Turn the appliance off at the mode selector switch (fig. 1, 25).

6.11 Filling, Testing and Regulating the Domestic Hot Water System

6.11.1 Start with the appliance switched on having completed the procedures described in 6.4 to 6.10.

6.11.2 Open a domestic hot water tap (preferably the bath tap).

Ensure cold water inlet stopcock is fully open (vertically up) and the dhw control knob (24) is set at maximum.

6.11.3 Set the adjustable stopcock to restrict the maximum flow of water and achieve a temperature rise acceptable to the end user.

6.11.4 The flow of water should activate the domestic hot water flow switch (13) and drive the diverting valve (16) to its hot water position thus heating the domestic water flowing through the dhw heat exchanger. At the same time the pump and fan are activated lighting the burner on maximum rate.

6.11.5 If the burner does not light, check that the water flow rate is above the minimum required to operate the domestic hot water flow switch (13) 2.0 litres/min (0.45 gals/min).

6.11.6 The temperature of the water will depend on the rate at which it flows.

The temperature of water at the tap can be varied by adjusting the water flow rate at the tap up to the maximum predetermined quantity.The hot water temperature control knob (24) will govern the maximum temperature. When the appliance is being used in hot water mode the temperature indicator (27) indicates the temperature of the hot water leaving the appliance.

6.11.7 It is best to set for the lowest acceptable temperature since the user can gain higher temperatures by restricting flow at the tap.

N.B. If the cold supply is subject to large fluctuations or is above the permitted maximum a suitable pressure/flow regulator should be fitted in the cold water supply to the appliance.

6.11.8 Turn the appliance mode selector switch (25) to the position.

Slowly close the tap to reduce the rate of draw to above the minimum approx. 2.0 litres/min., (0.45 gal/min.) Rotate the dhw control knob to ensure the appliance modulates at its various setting.

6.11.9 Close the draw-off tap still further. The burner should stop when the rate falls below approximately 2.0 litres/min. (0.45 gal/min.).

6.11.10 The appliances incorporate a hot water preheat facility. The appliance will therefore ignite periodically to maintain heat within the appliance.

6.12 Final Check for Operations

Turn mode selector switch to the OFF/RESET position, disconnect pressure gauge, re-tighten screw. Relight boiler.

6.12.1 Re-check for gas soundness.

6.12.2 Re examine heating and hot water systems and cold water supply for water soundness.

6.12.3 Check the appearance of the gas flame to assess adequacy of combustion air supply.

6.12.4 Re-check the flue system for soundness and adequacy of supports.

6.13 Concluding Operations

6.13.1 If external/internal controls have been disconnected and terminals TA & TA temporarily linked, remove the link and reconnect the controls circuit. Check the operation of the controls.

6.14 Refixing the boiler casing (fig. 24).

6.14.1 Offer up the front casing to the back frame in a near vertical attitude and locate the hooks on the casing over the hooks on the frame.

Slide the casing downwards to fully engage the hooks and to align the bottom fixing holes. Replace the two case retaining screws (fig.24).

6.14.2 Hinge up the control fascia and secure using the two screws (fig.25).

6.14.3 Disconnect filling loop, fit filling loop cap. Leave filling loop in a safe and accessible place.

6.15 Supplementary Instructions for Fitting & Removing Optional Time Clock and for Wiring to External Controls.

Section 10 Appendices A and B at the rear of this manual provides full instruction for fitting and wiring the optional built-in time switches and for wiring to external controls.

6.16 Complete details of the boiler, controls, installation and commissioning in the log book supplied with the boiler. This is an important document which must be correctly completed and handed to the user. Failure to install and commission this appliance to the manufacturers instructions may invalidate the warranty.

SECTION 7 INSTRUCTING THE USER

7.1 Hand over the copy of the Users Instructions and boiler log book supplied with the appliance, together with these instructions. Explain how to operate the boiler correctly and how to use the timeclock and room thermostat if fitted.

7.2 Show the user how to switch off the appliance and indicate the position of the electric supply isolator.

7.3 Inform the user of the location of all drain cocks and air vents.

7.4 Explain how to turn the appliance off for both short and long periods and advise on the precautions necessary to prevent damage should the appliance be inoperative when freezing conditions may occur.

7.5 Show the user the filling loop position its function and how to repressurise the system using the filling/inlet valve.

7.6 Advise the user that, for continued safe and efficient operation, the appliance must be serviced by a competent person at least once a year.

Fig. 24

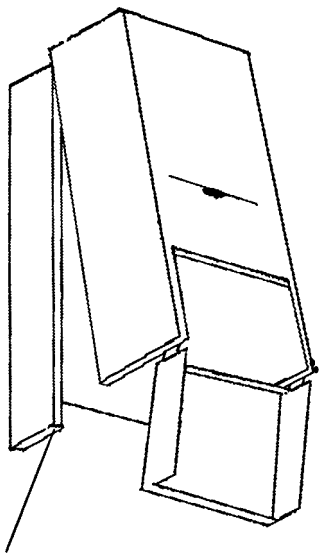

Case screws
(one either side)

Fig. 25

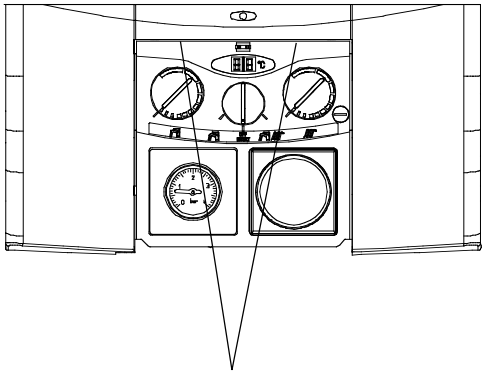

Case Screws

8.1 General

To ensure the continued safe and efficient operation of the appliance, it is recommended that it is checked and serviced as necessary at regular intervals.

The frequency of servicing will depend upon the particular installation conditions and usage, but in general, once per year should be adequate.

It is the law that any servicing work is carried out by a competent person such as a Vokèra service engineer, approved service agent, British Gas or other CORGI registered personnel.

The following instructions apply to the boiler and its controls, but it should be remembered that the central heating and domestic hot water systems will also require attention from time to time.

8.2 Important Notes

WARNING: having carried out preliminary flame checks and before starting any servicing work, switch OFF the mains electricity supply and disconnect the plug at the main isolating switch and socket. (If a switch is used remove the fuse.)

Turn off gas supply at the gas service tap fitted to the appliance.

Always test for gas soundness after any service work and after exchanging any gas carrying component.

8.3 Recommended Routine Servicing

8.3.1 Annual Servicing

When servicing is required the following procedures should be carried out.

1. Inspect exterior for signs of damage and deterioration, particularly of flue pipework and electrical connections.

2. Turn off mains electricity and remove front casing (see 8.4.).

3. Replace fuse if previously removed (8.2. above) and turn on electricity. Run the boiler for a few minutes in the domestic hot water mode to permit inspection of its operation. This is accomplished by opening a domestic hot water draw off tap and inspecting burner for yellowing of flame tip, flame lift off or sooting.

4. Ensure central heating valves are open. See 6.3.2.1.

Observe pressure gauge reading (fig. 1, 31 which should be approximately 1 bar when the system is cold See 6.3.4

5. Turn off mains electricity and turn off gas service tap on the appliance.

6. Gain general access as described in 8.4.

7. Remove main burner (see 8.6). Lightly clean with a soft brush and inspect for damage. If during initial inspection any combustion irregularity was suspected, remove injectors and clean or replace (see 8.7).

8. Place cloth below combustion chamber to catch debris. Clean heat exchanger using suitable brushes and rods if necessary.

9. Inspect combustion chamber lining. The insulating material is easily damaged. Do not scrape, but clean off lightly.

If any panels are damaged these should be replaced (see 8.11).

10. Replace all parts in reverse order but leave the controls fascia open and outer casing off.

11. Undertake a complete commissioning check as detailed in section 6.

12. Close up control fascia and refix front casing.

13. Clean off casing using soft cloth and dilute detergent.

14. Complete details of service undertaken in the boiler log book.

NOTE: there is a flue gas analysis test point incorporated in the flue outlet (fig. 1, 23).

8.3.2 Replacement of Parts

1. The life of individual components varies and they will need servicing as and when faults develop. The fault finding sequence charts in section 9 will serve to locate which component is the cause of any malfunction. Instructions for removal, inspection and replacement of the individual parts are given in the following pages.

2. The domestic hot water heat exchanger may in certain conditions become partially blocked by scale deposits. Evidence of this will be deterioration in performance.

This condition could well be treated using proprietary descalants following makers' instructions without dismantling the appliance by circulating a fluid through the dhw coil. To do this, disconnection from hot and cold services is necessary. Reconnect only after thorough flushing with clean water.

3. Occasional maintenance of mechanical working parts will be necessary (three port valve, flow diaphragm). Service kits are available from your local Vokèra stockists. Vokèra Service Kit No.T0019.

8.4 To Gain General Access/Assembly

To remove components access to the interior is essential. Refer to figs. 10 & 11.

Ensure electricity supply is isolated before carrying out any servicing.

8.4.1 To remove front casing.

Push to release front door panel and lower to reveal controls. Loosen the 2 captive screws securing the front control panel to the lower part of the casing and lower to reveal inside of boiler (fig. 10).

Remove two screws at base of casing, slightly lift the casing and slide it gently towards the top of the appliance to disengage the case from the top suspension hooks (fig. 11).

Ensure the casing and screws are put to one side in a safe place.

8.4.2 Reassembly is always carried out in reverse order to dismantling, unless otherwise stated. Electrical connections must be remade in accordance with the wiring diagram (figs.39-40).

8.4.3 Where gas control components are replaced, check the burner pressures and adjust if necessary. See 8.23.

8.5 Room Sealed Chamber Front Cover
Refer to fig. 26.

8.5.1 Gain general access as 8.4.

8.5.2 Remove room sealed cover plate by releasing two lower retaining clips and easing cover off the top locating hooks. Inspect gasket for damage. If damaged, replace.

NOTE: when refitting the combustion chamber front cover it is essential to correctly seat and secure the cover in place ensuring both clips are secured in place.

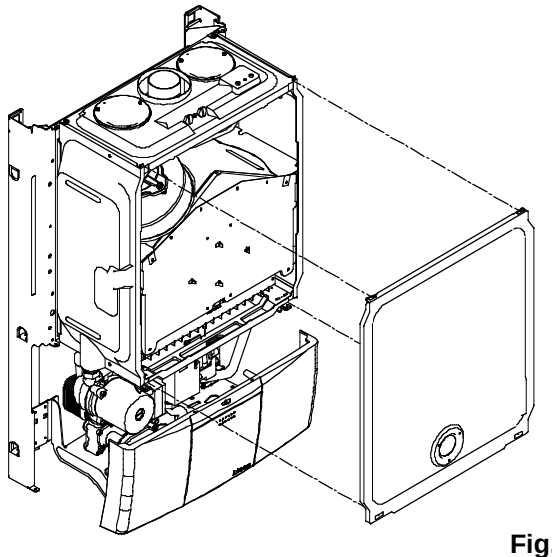

Fig. 26

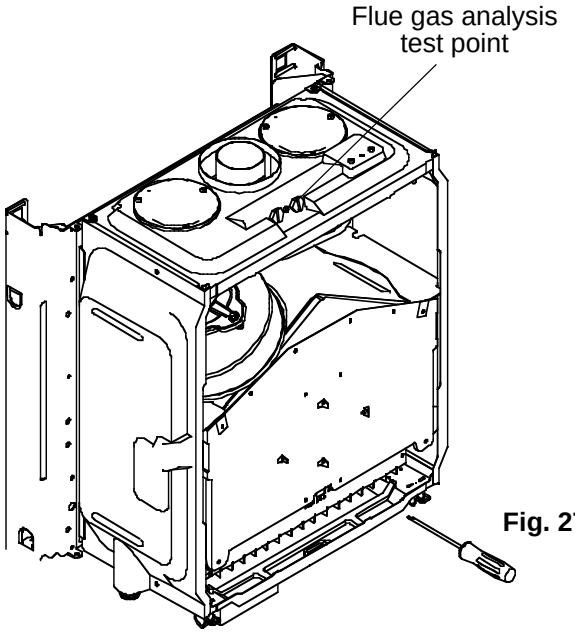

Fig. 27 a

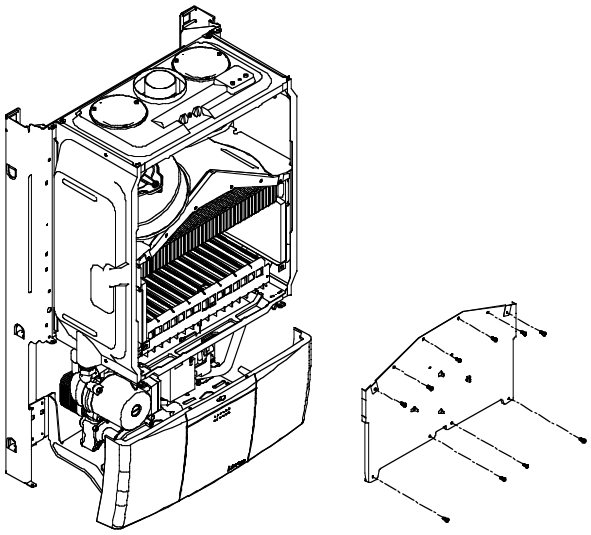

Fig. 27 b

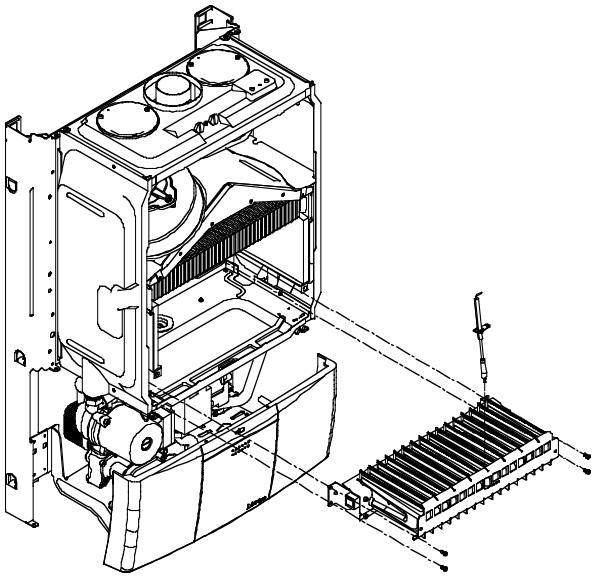

Fig. 28 a

8.6 Main Burner and Electrodes

Main Burner Part No 0511 N.G. 0512 L.P.G
Spark/Sense Electrode Part No 1838
Refer to figs 28a - 28c.

8.6.1 Gain general access as 8.4.

8.6.2 Remove room sealed front cover as 8.5

8.6.3 Remove front of combustion chamber by releasing screws (fig. 27a&b).

8.6.4 Remove four burner retaining screws (fig. 29a&b). Ease burner forward and rest on chamber base (fig. 28a&b).

8.6.5 Release electrode retaining screws & carefully remove electrode(s).

8.6.6 Trace electrode and earth lead to electronic ignition control and gas valve and disconnect

Trace electrode leads, 1 to pcb and 2 to electronic ignition unit and disconnect.

8.6.7 Remove main burner.

8.6.8 Reassemble in reverse order ensuring correct location of electrode(s).

Note1. If the Ionisation electrode is replaced the gas pressures will need resetting as instructed in 8.23.

Note 2: If difficulty is found in relocating the burner securing screws, easier access can be gained by removing the two side panels (fig. 28a&b).

Note 3: See page 36 for electrode positioning.

8.7 Main Burner Injectors

8.7.1 Gain general access as 8.4.

8.7.2 Remove room sealed front cover plate and combustion chamber front (8.5 & 8.6.3).

8.7.3 Remove main burner (8.6.4 to 8.6.8).

8.7.4 Unscrew injector(s) from burner bar.

8.8 Main Heat Exchanger
0513
Refer to fig. 29

8.8.1 Gain general access as 8.4.

8.8.2 Remove room sealed front cover plate (8.5).

8.8.3 Remove front of combustion chamber (8.6.3).

8.8.4 Remove two air baffle plates, 1 screw securing each (fig. 30).

8.8.5 Remove both side panels, 2 screws each (fig. 28a&b).

8.8.6 Close heating flow and return valves by turning 1/4 turn until indicating lines are horizontal. Pull lever on head of safety valve to drain primary circuit to boiler.

8.8.7 Place cloth under heat exchanger to catch surplus water.

8.8.8 Unscrew unions on either side of main heat exchanger fig. 29a&b.

8.8.9 Slide out main heat exchanger, taking care not to damage insulation panels. Avoid spillage of water on boiler electrics.

8.8.10 Reassemble in reverse order using new fibre washers in unions.

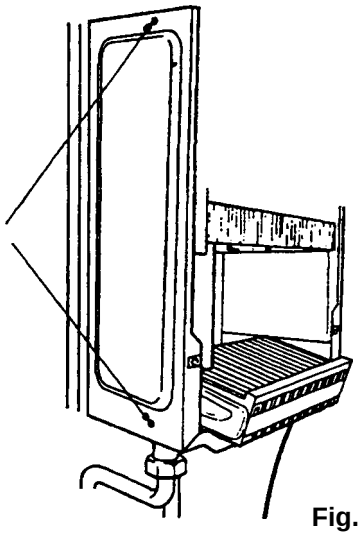

Fig. 28b

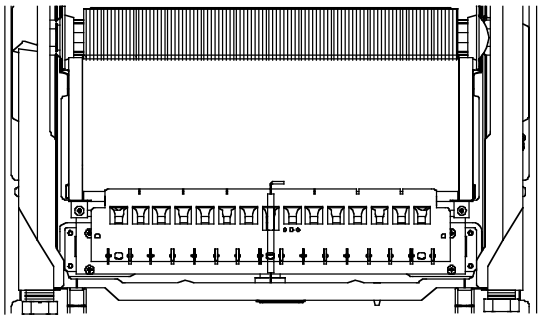

Fig. 28c

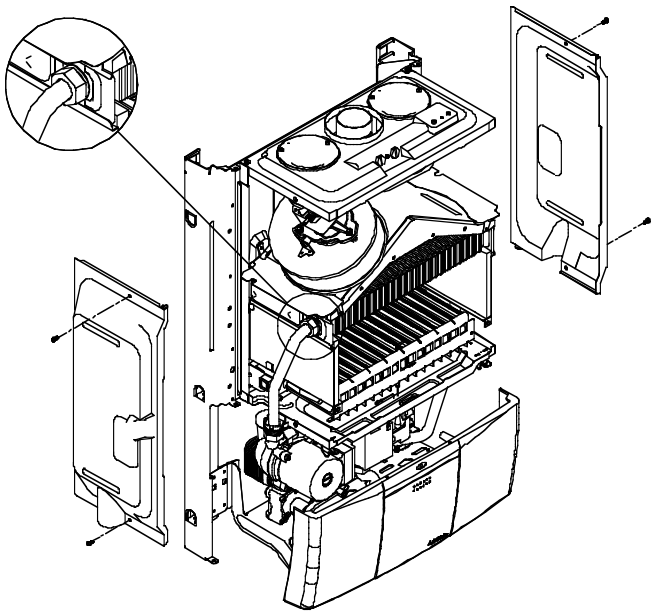

Fig. 29a

8.9 Flue Fan
Part No. 2076.

8.9.1 Remove room sealed front cover plate (8.5) and front of combustion chamber (8.6.3).

8.9.2 Loosen maintenance clip securing screws (see fig. 30) and slide upwards to clear joint.

8.9.3 Remove silicone pipes from nozzles on inner flue bend.

8.9.4 Remove 5 flue hood retaining screws (see fig. 30).

NOTE: when removing the two side screws the two air baffle plates can be removed.

8.9.5 Carefully slide flue hood forward disconnecting electrical leads on fan in the process.

8.9.6 Unscrew 4 screws securing fan to flue hood and remove fan. Transfer aluminium manifold (two screws) to new fan.

8.9.7 Reassemble in reverse order, replacing centre hood screw first.

8.10 Differential Analog Pressure Switch
Part No. 2677
Refer to Fig. 30

8.10.1 Gain general access as 8.4.

8.10.2 Remove room sealed cover (8.5).

8.10.3 Remove 2 screws holding pressure differential switch to the combustion chamber.

8.10.4 Pull off tab connectors and remove pressure switch, disconnecting the air pressure pipes in the process.

8.10.5 Reassemble in reverse order.

See fig. 39&40 for correct fitting of electrical connections. When reconnecting the pressure pipes the upper nozzle on the inner flue bend connects to the upper nozzle of the pressure differential switch.

8.11 Combustion Chamber Insulation Boards

8.11.1 Gain general access as 8.4.

8.11.2 Remove room sealed front cover 8.5.
Remove front of combustion chamber 8.6.3.

Remove Main Heat Exchanger 8.8.

8.11.3 To remove side combustion chamber insulation boards, gently prise upwards and pull out.

8.11.4 To remove rear board, gently prise upwards and pull out.

8.11.5 Fourth panel (front) is replaced complete with combustion chamber front panel.

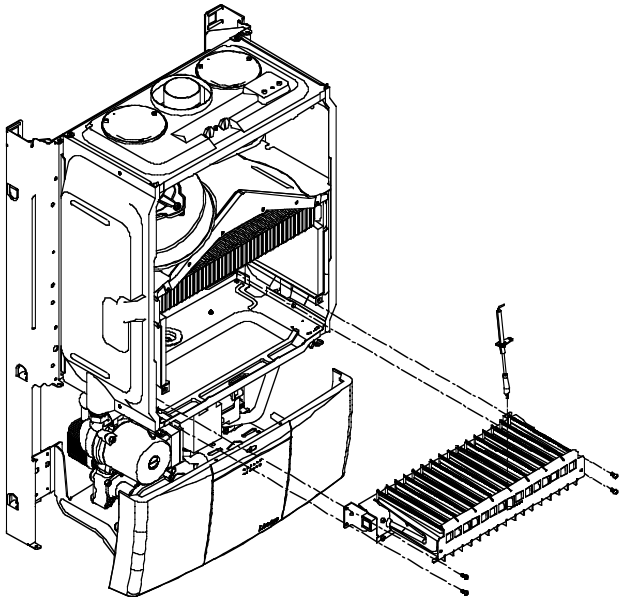

Fig. 29b

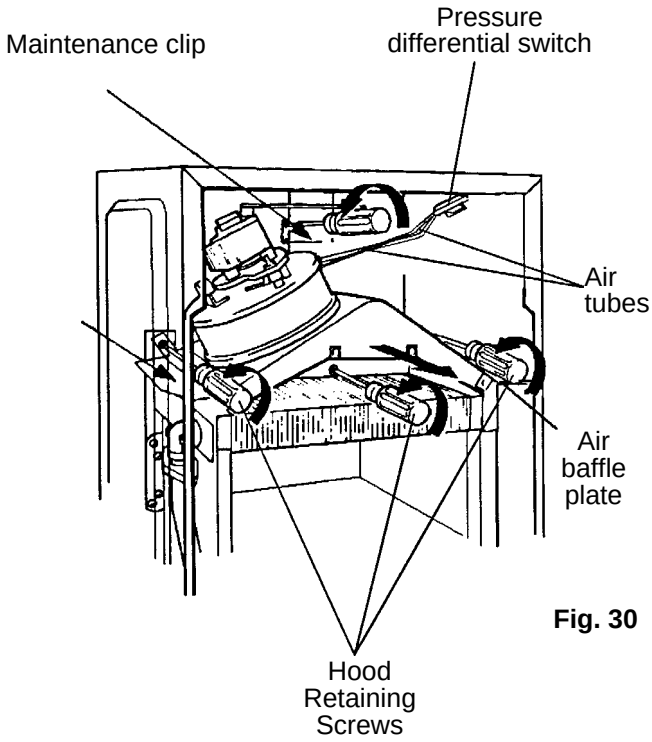

Fig. 30

8.12 Ignition PCB

8.12.1 Gain general access as 8.4.

8.12.2 Remove PCB cover.

8.12.3 Disconnect wires from ignition PCB.

8.12.4 Remove ignition PCB.

8.12.5 Replace in the reverse order ensuring wires are replaced correctly.

8.13 Gas Control Valve (complete)
Part No. 2471 fig. 31.

8.13.1 Turn off gas service tap.

8.13.2 Remove Ignition control box as 8.12.

8.13.3 Pull off silicone tube from gas valve regulator.

8.13.4 Disconnect earth leads from gas valve.

8.13.5 Disconnect wires from modulator coil.

8.13.6 Unscrew gas service tap union & release from its seating.

8.13.7 Remove 2 screws securing gas valve bracket to the base frame.

8.13.8 Undo union above the gas control valve & withdraw gas valve.

8.13.9 Transfer gas connecting pipes to the new valve using new gasket.

8.13.10 Reassemble in reverse order.

8.13.11 Test all joints for gas soundness.

8.13.12 Check burner pressures. As detailed in 6.6.

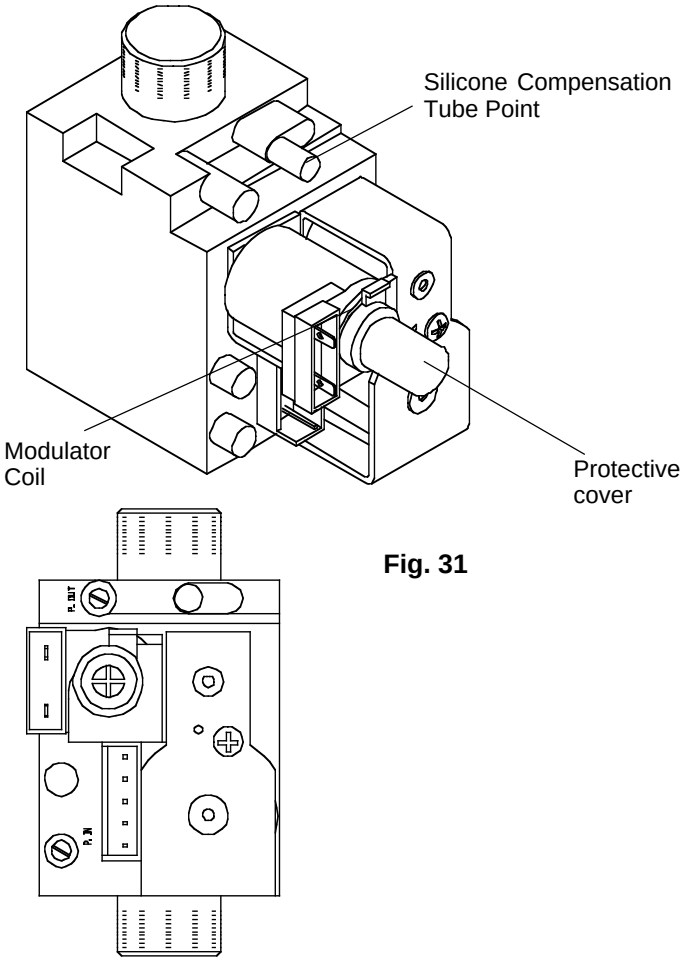

Fig. 31

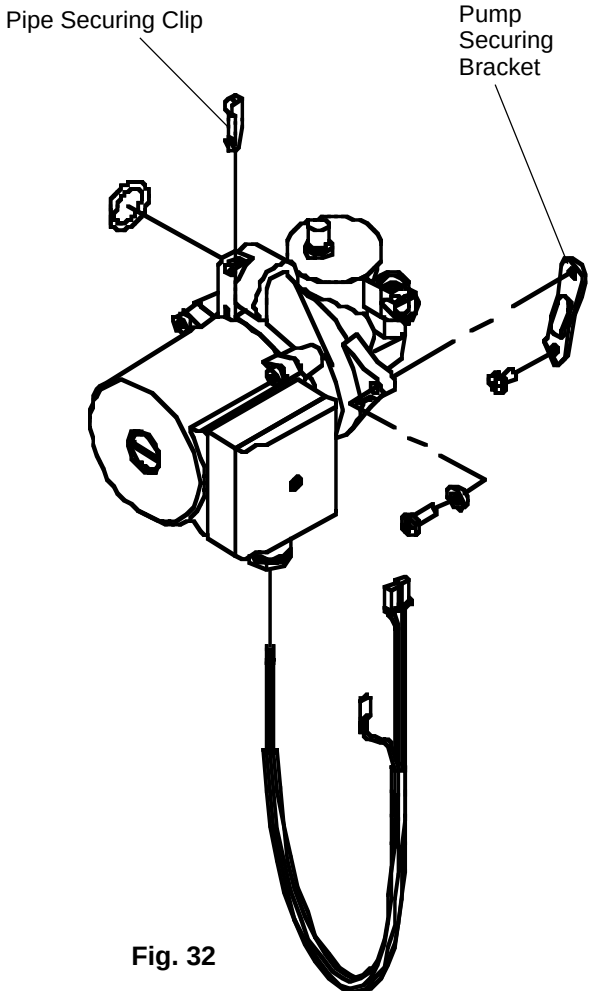

Fig. 32

8.14 Pump
Part No. 0438.

8.14.1 Gain general access as 8.4.

8.14.2 Close heating flow and return valves (fig. 6), by turning 1/4 turn until indicating lines are horizontal. Pull lever on head of safety valve to drain primary circuit to boiler.

8.14.3 Place cloth under pump to catch surplus water.

8.14.4 **HEAD ONLY** Unscrew the 4 allen screws around the pump head. Pull head from base of pump and disconnect electrical leads. If replacement required, use the head from a standard 15-60 Grundfos.

8.14.5 **COMPLETE PUMP** Disconnect pipe union connection at front left corner of combustion chamber. See fig. 33.

8.14.6 Disconnect push fit pipe from pump body by releasing pump securing clip and pulling pipe free from body. See fig. 32.

8.14.7 Remove screw from pump securing bracket.

8.14.8 Grasp pump and pull upwards with slight twisting movement to release pump from manifold.

8.14.9 Disconnect electrical leads from pump.

8.14.10 Remove pump securing bracket from pump housing and transfer to new body.

8.14.11 Reassemble in reverse order.
Reconnect electrical leads Brown to L, Blue to N and Green to E.

8.15 Domestic Flow Switch
Refer to fig. 33.

8.15.1 Gain general access as 8.4.

8.15.2 Place receptacle or an absorbent pad below appliance to catch trapped water.

8.15.3 Close cold water inlet stopcock. See fig.6 and 6.3.2.4.

8.15.4 Open lowest draw-off or drain tap on hot water system.

8.15.5 Disconnect cold water inlet valve from flow switch by undoing union.

8.15.6 Disconnect union at top of flow switch and two electrical tab connectors.

8.15.7 Undo lock nut securing flow switch to base frame and remove.

8.15.8 Reassemble in reverse order.

8.16 Combined Diverter Valve & Pressure Switch
Refer to fig. 33.

8.16.1 Gain general access as 8.4.

8.16.2 Place receptacle or an absorbent pad below appliance to catch trapped water.

8.16.3 Remove domestic hot water heat exchanger as 8.17.

8.16.4 Remove diverter valve as 8.21.8.

8.16.5 Release pressure switch from the hydraulic group by removing one retaining screw on bracket.

8.16.6 Remove cold water connecting pipe by undoing the unions at both ends.

8.16.7 Disconnect flow tube union where it connects onto the hydraulic group.

8.16.8 Disconnect expansion vessel pipe.

8.16.9 Unscrew pressure gauge connection retaining screw and pull out pressure gauge connnection.

8.16.10 Disconnect safety valve discharge pipe and heating valve unions.

8.16.11 Remove retaining screw securing hydraulic group to frame.

8.16.12 Withdraw hydraulic group from appliance. See fig. 34 for further disassembly.

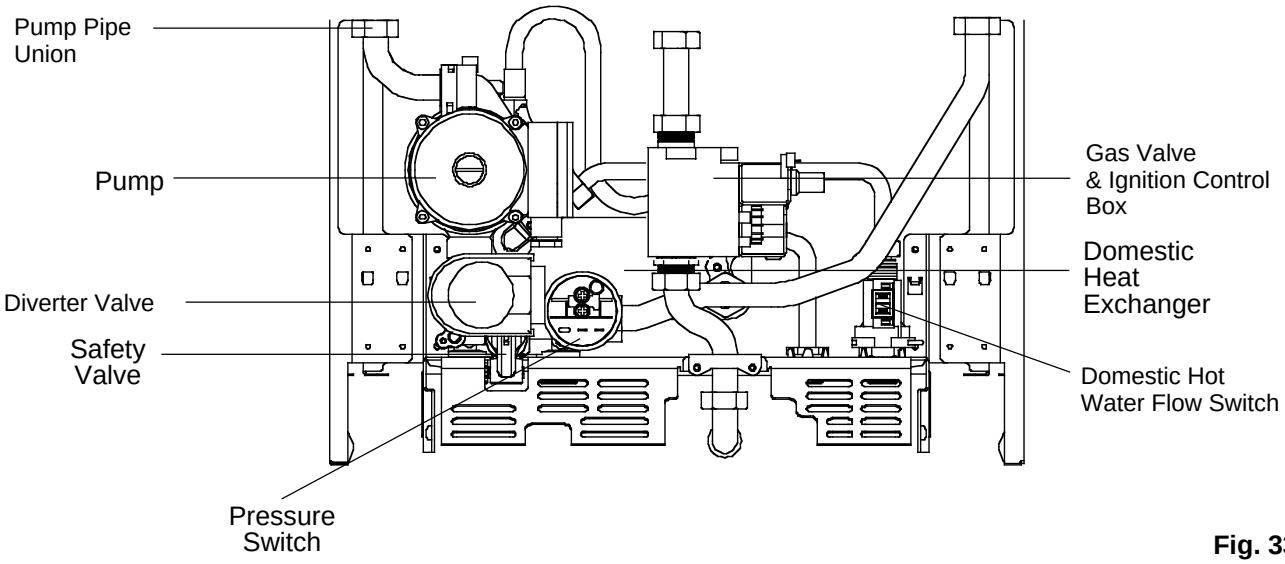

Fig. 33

8.17 Removal of Domestic Hot Water Heat Exchanger

Refer to figs. 33 and 34.

8.17.1 Gain General access 8.4.

8.17.2 Place receptacle or an absorbent pad below appliance to catch trapped water.

8.17.3 Close cold water inlet stopcock.See fig. 6 and 6.3.2.4.

8.17.4 Open lowest draw-off or drain tap on hot water system.

8.17.5 Close heating flow and return valves (fig. 6) by turning 1/4 turn until indicating lines are horizontal. Pull lever on head of safety valve to drain primary circuit to boiler.

8.17.6 Remove domestic heat exchanger retaining screw (L/H) and elongated brass nut (R/H).

8.17.7 Gently release heat exchanger from O' ring seals by rocking to the rear and remove.

8.17.8 Remove insulation jacket and transfer to new domestic heat exchanger.

8.17.9 Reassemble in reverse order, using new O' rings if required.

8.18 Diverter Valve

8.18.1 Gain general access as 8.4.

8.18.2 Close heating flow and return valves (fig. 6) by turning 1/4 turn until indicating lines are horizontal. Pull lever on head of safety valve to drain primary circuit to boiler.

8.18.3 Remove motorised valve. See 8.21.8.

8.18.4 Remove front of diverter valve by unscrewing six retaining bolts.

8.18.5 See Fig.35 for further disassembly and location of components.

8.18.6 Reassemble in reverse order.

8.19 Checking/Replacing Main Expansion Vessel

8.19.1 The expansion vessel is factory pressurised 0.8 bar (12psig) and should be checked during servicing. Should it have lost pressure it can be repressurised in situ. Drain the boiler. Fit a suitable pump and gauge (i.e. car foot pump and gauge) to the nipple at the top right-hand side of the expansion vessel, and pressurise to 0.8bar (12psig) and remove the pump.

NOTE: Access to the nipple can be improved by removing the upper vessel retaining bracket and rocking the vessel forwards.

If the vessel cannot be repressurised or if pressure loss is very frequent the expansion vessel will require changing. Alternatively, a new vessel can be fitted in the return to the appliance, and the old vessel isolated in situ.

8.19.2 Switch OFF mains electricity and gain general access. Disconnect electricity supply and wiring for external controls from the appliance.

8.19.3 Close heating flow and return valves (fig. 6) by turning 1/4 turn until indicating lines are horizontal. Pull lever on head of safety valve to drain primary circuit to boiler.

8.19.4 Remove screws on large maintenance clip/s (fig. 13) and remove. Loosen screws on the small clip/s and disconnect flue.

8.19.5 Disconnect all pipe unions at the base of the appliance.

8.19.6 Lift appliance off upper bracket.

8.19.7 Remove two screws retaining vessel securing strap at top. Disconnect expansion pipe at base of expansion vessel and lift vessel out of the appliance.

8.19.8 Reassemble in reverse order, using new fibre washers.

8.20 Safety Valve
Part No. 1806 Refer to figs.33 & 34.

8.20.1 Gain general access as 8.4.

8.20.2 Close heating flow and return valves (fig. 6) by turning 1/4 turn until indicating lines are horizontal. Pull lever on head of safety valve to drain primary circuit to boiler.

8.20.3 Disconnect safety valve discharge pipe.

8.20.4 Loosen grub screw at base of safety valve and pull forwards releasing valve from O' ring seal.

8.20.5 Replace in reverse order.

8.21 Removal of Electrical Components

8.21.1 Ensure electricity is switched off at main isolator and gain general access as 8.4.

8.21.2 Pressure Microswitch
Fig. 1, no. 15.

8.21.3 Gain general access as 8.4.

8.21.4 Release microswitch from hydraulic group by removing one securing screw.

8.21.5 Remove plastic cover.

8.21.6 Remove electrical wires.

8.21.7 Reassemble in reverse order ensuring correct location of electrical connections.
(See fig. 39&40 for electrical connections).

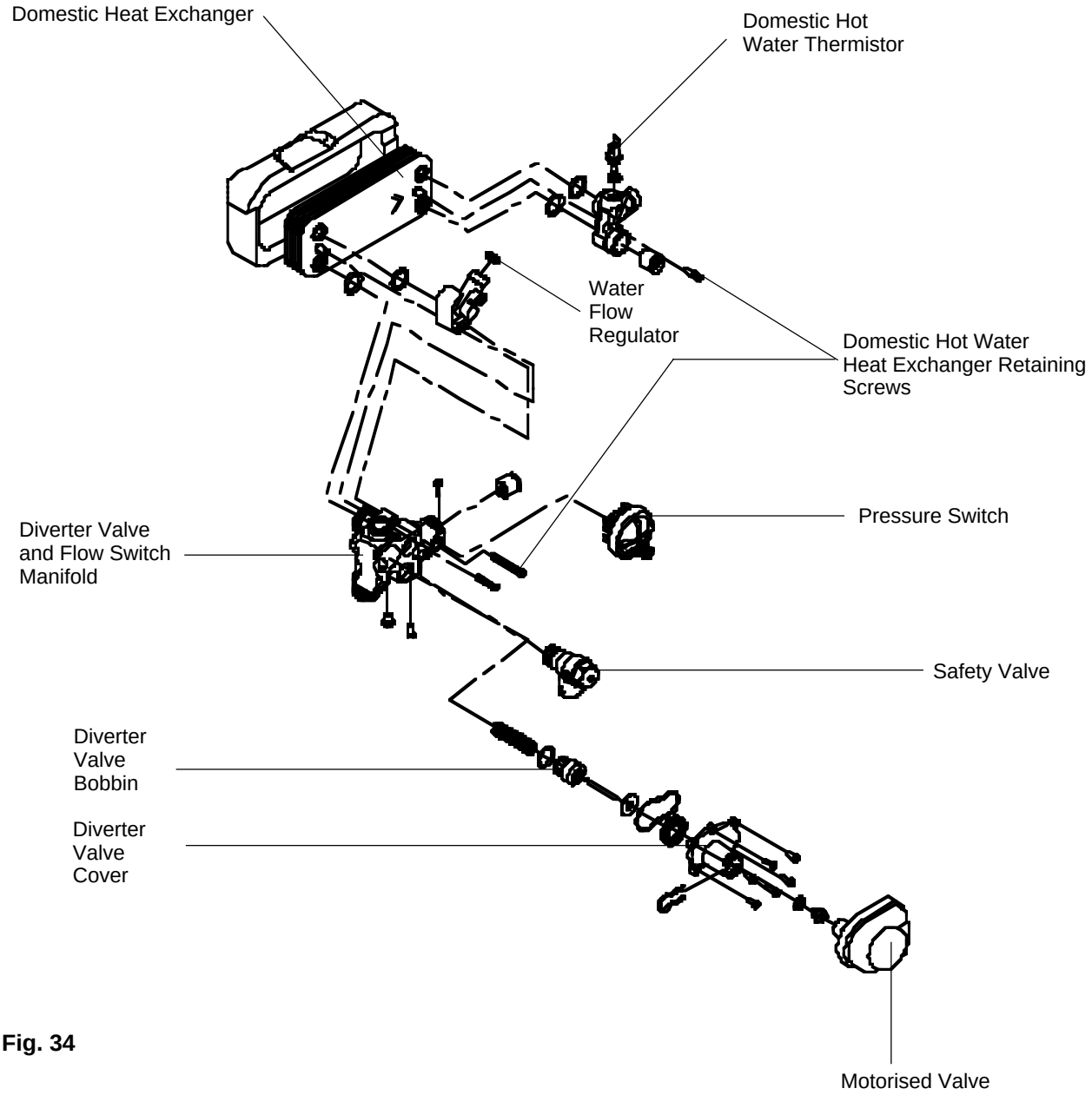

Fig. 34

8.21.8 Diverter Valve

8.21.9 Gain general access as 8.4.

8.21.10 Release motorised valve by removing retaining clip.

8.21.11 Remove electrical plug in connector.

8.21.12 Reassemble in reverse order.

8.21.13 Printed Circuit Board
Part No. 05022.

8.21.14 Gain general access as 8.4.

8.21.15 Remove printed circuit board cover by releasing 5 securing screws.

8.21.16 Pull out multi plug connectors,one earth lead and one electrode lead from the printed circuit board.

8.21.17 Remove 2 screws securing circuit board to front panel and remove board.

8.21.18 Reassemble in reverse order ensuring correct location of electrical connections.
(See fig. 39&40 for electrical connections).

NOTE: it will also be necessary to check/ adjust the c/h gas pressure as 8.23.

8.21.19 Display Printed Circuit Board

8.21.20 Remove printed circuit board as 8.21.13 to 8.21.18.

8.21.21 Remove three control knobs from front control panel.

8.21.22 Remove the two screws securing the circuit board to the front panel.

8.21.23 Pull out two multi-plug connectors.

8.21.24 Replace in reverse order.

8.21.25 Safety Thermostat
Part No 8367 Refer to fig. 35.

8.21.26 Gain general access as 8.4.

8.21.27 Remove room sealed chamber front cover as 8.5 and R/H side panel (fig. 28a&b).

8.21.28 Pull off the two electrical connections on the back of the thermostat.

8.21.29 Release stat from flow pipe by unscrewing 2 retaining screws.

8.21.30 Reassemble in reverse order ensuring correct location of electrical connections.
(See fig. 39&40 for electrical connections).

8.21.31 Thermistor Sensors
Part No. 8484 Refer to fig.35.

8.21.32 Gain general access as 8.4.

8.21.33 Remove room sealed chamber front cover as 8.5. Remove R/H side panel as fig.28a&b.

8.21.33a PRIMARY
Close heating flow and return valves (fig. 6) by turning 1/4 turn until indicating lines are horizontal. Pull lever on head of safety valve to drain primary circuit to boiler.

8.21.33b DOMESTIC HOT WATER
Close cold water inlet stopcock. See fig.6 and 6.3.2.4.
Open lowest draw-off or drain tap on hot water system.

8.21.34 Remove ignition control box as 8.12.

8.21.35 Pull off electrical plug connection from thermistor.

8.21.36 Unscrew thermistor from pocket.

8.21.37 Reassemble in reverse order.

8.22 Pressure Gauge
Part No 1857.

8.22.1 Gain general access as 8.4.

8.22.2 Close heating flow and return valves (fig.6) by turning 1/4 turn until indicating lines are horizontal. Pull lever on head of safety valve to drain primary circuit to boiler.

8.22.3 Trace capillary from back of pressure gauge to connecting point on brass manifold.

8.22.4 Unscrew the retaining screw beside the capillary tube entry to the manifold.

8.22.5 Pull out capillary tube from manifold.

8.22.6 Squeeze plastic locking lugs behind fascia and press gauge from aperture.

8.22.7 Reassemble in reverse order following original route for capillary tubes and ensuring locking lugs are located in the grooves.

Fig. 35

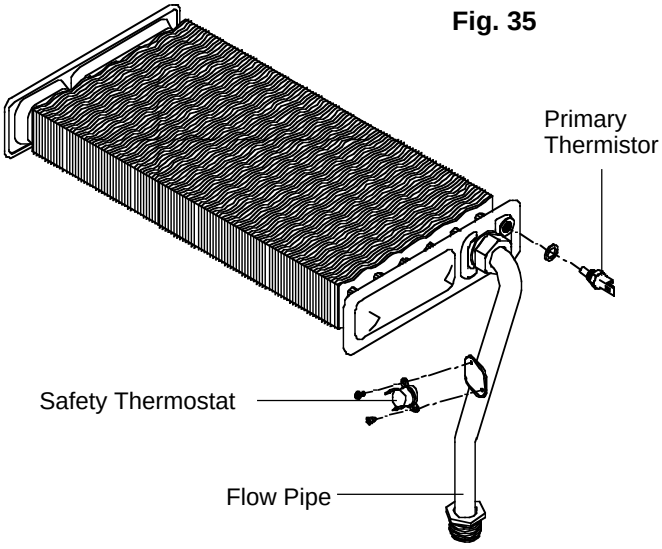

8.23 Setting Gas Pressures

ALL SETTINGS DONE WITH A SUITABLE MANOMETER CONNECTED TO GAS VALVE AS INSTRUCTED IN 6.6.5.

8.23.1 Setting Maximum Rate

Turn off electrical supply to boiler and follow instructions in section 8.4 to gain access. Refer to fig. 22 & 36.

Turn on the electricity supply and the appliance mode selector switch to remove gas pressure adjustment protective cover (fig. 36). Turn on fully a domestic draw off tap.

The boiler will now light at full flame. Screw the outer nut (a) on the end of the modulator coil slowly clockwise until the burner lights.

Adjust the nut until the correct pressure is obtained on the gauge. The correct reading should be:

10.1 mbar
plus or minus 1.0 mbar

8.23.2 Setting Minimum Rate

Remove one of the grey wires connecting to the modulator coil. The gas pressure will now be at the minimum rate.

Turn the inner minimum adjusting screw (b) anti clockwise to decrease the pressure, or clockwise to increase the pressure until the minimum gas pressure is achieved, (ensure when adjusting the inner screw the outer nut (a) is held in position) the correct reading should be:

1.1 mbar
plus or minus 0.11 mbar

Replace the grey wire back onto the modulator coil together with the protective cover.

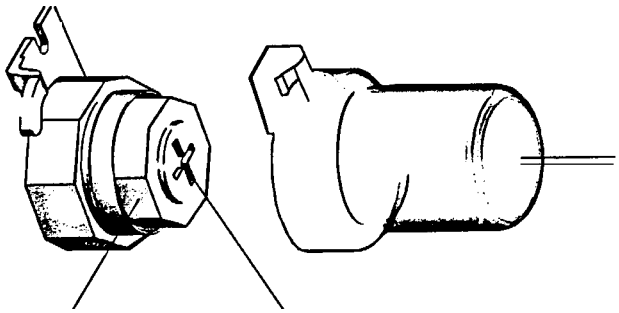

Fig. 36

8.24 Soft Light Ignition

The Linea range incorporates a fully automatic soft light ignition sequence which is non adjustable.

When ignition is called for the gas valve is energised and at the same time 20 m/A is applied to the modulator coil for a period of approximately 3 seconds. During this 3 seconds the appliance will ignite.

After the initial 3 seconds power to the modulator coil is gradually increased to a maximum power of 140 m/A.

140 m/A is applied to the modulator coil for a further second. If the appliance is operating in hot water mode the maximum heat input will be automatically adjusted depending on the temperature of the appliance.

If the appliance is operating in central heating mode see 8.24.1.

8.24.1 Maximum Rate in Central Heating Mode.

The Linea range does not require any adjustment to maximum heat requirement of the system load.

After initial ignition the appliance will automatically reduce the maximum heat input to 75% of its maximum capability for a maximum period of 15 minutes.

During this 15 minutes should there be sufficient temperature rise of the heating system the appliance will reduce the heat input to suit the system load to a point where the maximum selected temperature is achieved, and the appliance switches off.

Alternatively should the appliance fail to achieve sufficient temperature rise within this 15 minute period, the appliance will increase its maximum heat input to further increase the temperature of the system.

Once achieved the appliance will modulate to suit system load.

8.24.2 Combustion Analysis

Incorporated on the appliance is a combustion switch (fig.1, 29). Once the gas pressures have been set activation of the combustion switch automatically fires the appliance at maximum rate in central heating. The appliance will be held at maximum rate until the maximum temperature of the appliance is achieved. The appliance will not modulate during this period.

8.24.2.1 To use the combustion switch it is important that the gas pressures are set accurately as described in 8.23.1- 8.23.3.

8.24.2.2 Remove combustion switch cap on front control panel by turning 1/4 turn to disengage. Fig.1, 29

8.24.2.3 Unscrew flue gas analysis test point fig.1, 23. Set up flue gas analyser and insert probe into test point.

8.24.2.4 Using a screwdriver lightly press the black toggle behind the combustion switch cap once only.

The appliance will light at maximum rate. At this point the digital display will show **CO** to confirm the appliance is in combustion test mode.

8.24.2.5 Analyse flue gasses on analyser.

8.24.2.6 Once the analysis is complete lightly press the black toggle once to disengage the combustion mode. The display will revert to showing appliance temperature on the digital display.

NOTE: the combustion switch can also be used when gas rating the appliance.

8.25 End of Servicing

Run through the general commissioning as described in Section 6 as far as they apply.

Refit casing and clean up.

9.1 On completion of any service/fault finding task which has required the breaking and remaking of electrical connections, the checks Earth Continuity, polarity and Resistance to Earth must be repeated.

The following flow diagrams suggest the logical sequence of steps for fault finding.

They are not exhaustive but cover all that can reasonably be carried out on site by the installer.

Acquaintance with the functional sequence will prove helpful for some, and this is included for reference. As further help, the role of each part is briefly described.

Also included in this section are wiring diagrams and schematics to assist in fault location and servicing as described in the text.

9.2 Sequence of Functions

When following this sequence, refer to figs. 39 & 40. It is assumed that the mode selector switch is in the position.

9.2.1 **Rest** (No demand for central heating or hot water)

With no demand for heating or hot water the appliance will periodically light to preheat the domestic hot water heat exchanger. This is done to ensure that when a demand is made for domestic hot water the appliance is not cold, thereby reducing the wait for hot water. (This function can be deactivated by a service engineer). See page 58.

Once every 19 hours the appliance will automatically activate and deactivate the pump and motorised valve (provided the electrical supply is on to the appliance). This will help prevent these components becoming stuck if the appliance is not used for long periods.

The temperature indicator will always display the temperature of the boiler unless domestic hot water is drawn where it will indicate the temperature of the hot water leaving the appliance.

9.2.2 Domestic Hot Water Mode

Turning on a tap will cause the domestic hot water flow switch to activate.

Activation of the domestic hot water flow switch operates the motorised valve. Operation of the motorised valve mechanically diverts the primary water to the domestic heat exchanger in stand-by mode the diverter valve is already in DHW position. The pump is started simultaneously and with sufficient primary water pressure the fan starts which results in a voltage produced by the DAPS. Once this action has been proven the gas valve will be energised and the electrode will start to spark.

If a flame is detected during the ignition attempt time (8-12 seconds) the sparking will cease, the gas valve will remain energised and the appliance will produce hot water as described below.

If a flame is not detected the appliance will go to lockout (failure to detect a flame during ignition attempt time). The gas valve will be de-energised and the sparking will stop. (See self diagnostic error codes)

To reset the appliance after lockout turn the mode selector switch to the reset position for approximately 10 seconds then back to original position.

The temperature rise of primary water and domestic hot water in the appliance is sensed by thermistors on the flow tube and hot water outlet.

An increase in temperature will in turn decrease the voltage to the fan. The difference in pressure is detected by the differential analogue pressure switch (DAPS) and alters the voltage produced from it and transmits this to the pcb. The pcb will in turn decrease the voltage reaching the modulator coil causing the gas rate to be lowered in proportion to the fan speed. If the temperature rise is too great the fan and gas valve will turn off completely.

Conversely a fall in temperature of the primary and domestic hot water will increase voltage to the fan and this in turn increases the gas rate accordingly.

Temperature of the domestic hot water leaving the appliance is shown at the temperature indicator whenever hot water is drawn.

Constant monitoring of the temperature of the primary and domestic hot water by the thermistors will regulate the gas rate to maintain an average heat input.

NOTE: As the thermistor senses the temperature of the primary water leaving the main heat exchanger, the amount of heat transferred from the primary water to the dhw water depends upon the temperature differential between them.

When the dhw water draw off rate drops below the permitted minimum (2.0 l/min) the domestic hot water flow switch is deactivated, and the appliance either reverts to the 'Rest' mode where the fan may overrun to remove residual heat, or if there is a call for heating to the mode described below.

9.2.3 Central Heating Mode

In this mode the mode selector switch must be turned to the position.

With all controls calling for heat the motorised valve returns, mechanically diverting primary water to the central heating circuit. The pump will run and with sufficient primary water pressure the fan starts which results in a voltage produced by the DAPS. This in turn will energise the electronic ignition control box. The gas valve will be energised and the electrode will start to spark.

If a flame is detected during the ignition attempt period, (8-12 seconds) the sparking will cease and the gas valve will remain energised. The appliance will light at 75% of maximum heat input for a maximum of 15 minutes then increase to maximum output if required, or will modulate during the 15 minute period if the temperature rise is sufficient.

The temperature rise of the primary water is sensed by the thermistor on the heat exchanger.

As the temperature of the primary water approaches that set on the c/h temperature control, the boiler will modulate as described in domestic hot water mode.

On reaching the set temperature the gas valve is de-energised and the burner is extinguished.

The appliance has an inbuilt delay timer and re-ignition will not be attempted for approximately 3 minutes. This can be deactivated.

Constant monitoring of the temperature of the primary water by the thermistor will regulate the gas rate to maintain an average heat input. When the appliance has reached the set temperature and the burner is off, the pump will continue to run to circulate the primary water around the c/h system.

Temperature of the central heating is shown at the temperature indicator whenever the central heating is on.

If supply to the appliance is broken (e.g. by a room thermostat or timeclock) the burner is extinguished the pump stops, the motorised valve is energised into the hot water mode waiting for pre-heat or demand for hot water. However, the fan will continue to run until the primary water temperature is below 80°C.

Should there be a drop in primary water pressure below 0,2 mbar the pressure switch could deactivate and de-energise the gas valve.

Self Diagnostic Error Codes

The temperature indicator also serves as an error code indicator. Should an error occur the status LED (which is normally green) will flash red. This will be accompanied by the temperature indicator flashing an error code of **01 - 08**. Check code and proceed as follows:

01: Failure to ignite (see 6.5.5). To re-set turn mode selector switch to re-set position for approximately 10 seconds, then back to original position.

02: Overheat - Normally associated with either poor or lack of primary water circulation. Wait for appliance to cool then re-set as described for code 01.

03: Problem with fan/flue. Re-set as described for code 01.

04: Insufficient water pressure. Check pressure gauge reading, if low restore pressure (see 6.3.4) then re-set as described in code 01. Re-set as described for code 01.

05: Re-set as described for code 01.

06: Hot water thermistor open circuit.

07: Primary thermistor open circuit.

08: Burner overheat. Reset as described for code 01.

FAULT FINDING GUIDES

On the following pages are the fault finding guides. Be sure to read the notes below before begining any fault finding

NOTES:

1. To ensure correct fault diagnosis it is important that these guides are carried out in the set order.

2. Check the electrical supply polarity is correct before carrying out fault finding (lockout will occur if the polarity is reversed).

3. To ensure that internal/external controls (if fitted) do not interfere with fault finding, disconnect the wires from terminals TA & TA (labelling them in the process to ensure correct reconnection) and provide a solid link between TA & TA.

VOKERA
LINEA PLUS AG

Rev. 1 08/03/2000

TEST A : CHECKING OPERATION OF ELECTRONIC CONTROL BOARD AT START UP

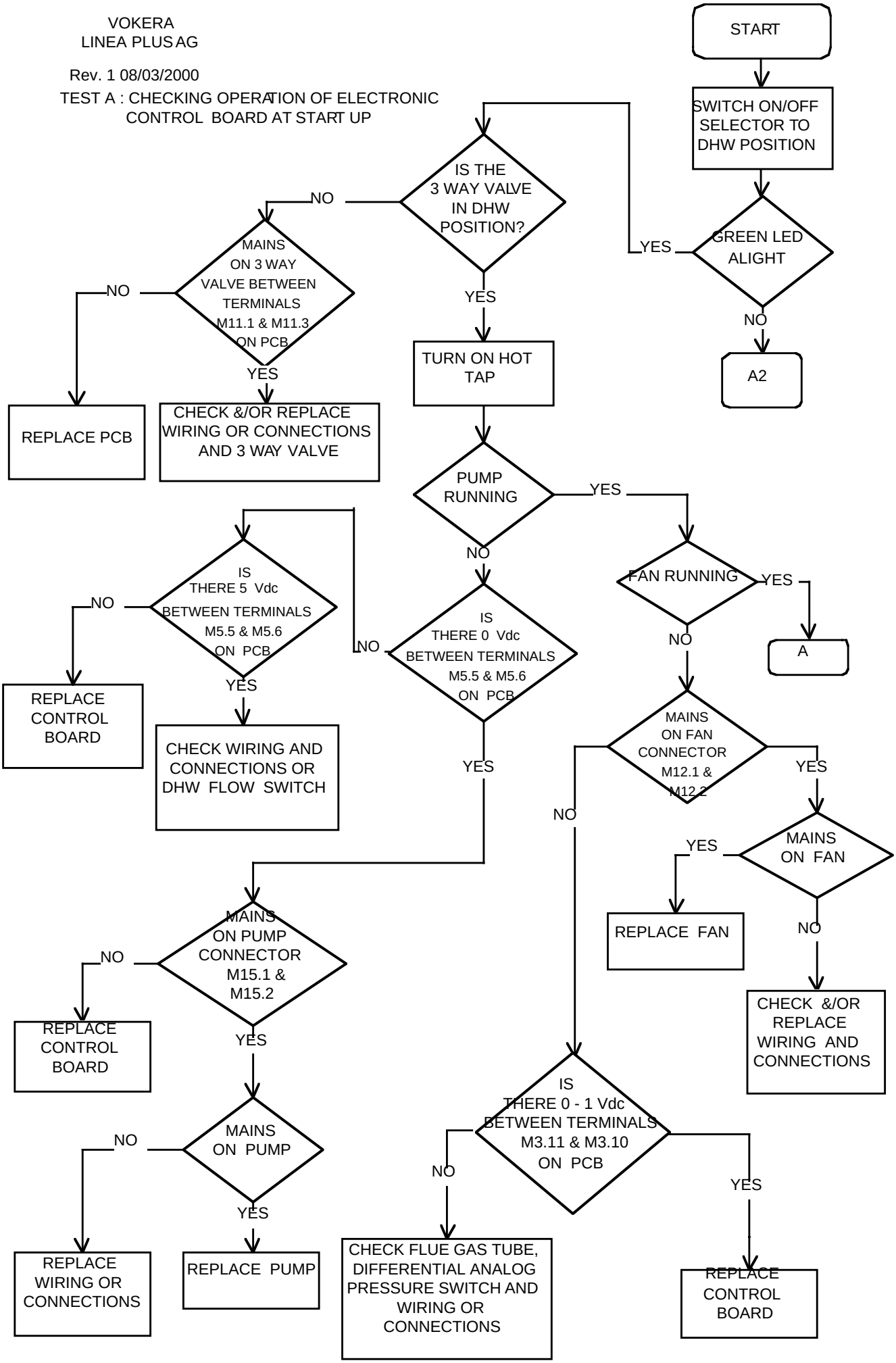

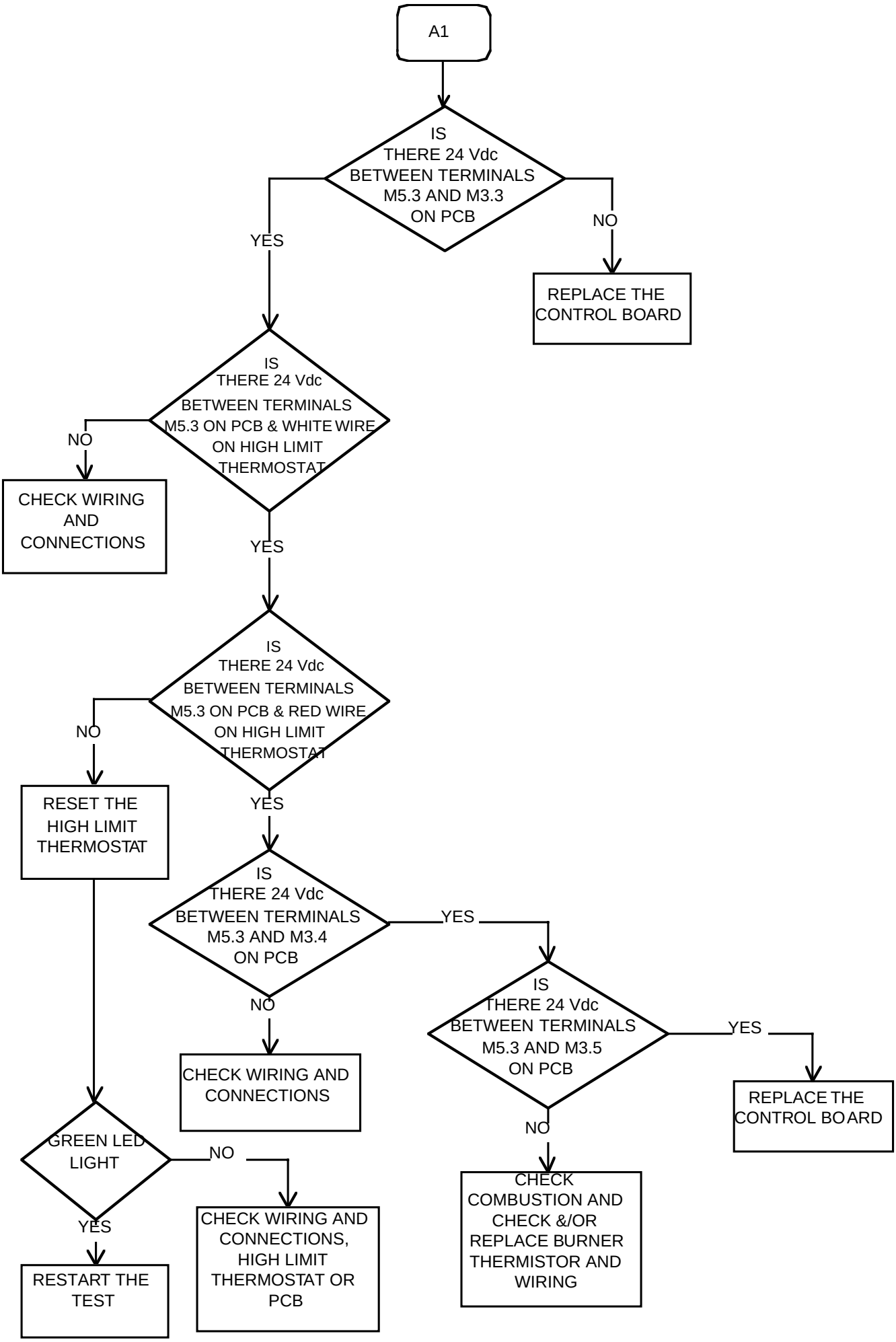
A1
IS THERE 24 Vdc BETWEEN TERMINALS M5.3 AND M3.3 ON PCB
YES
NO
REPLACE THE CONTROL BOARD
IS THERE 24 Vdc BETWEEN TERMINALS M5.3 ON PCB & WHITE WIRE ON HIGH LIMIT THERMOSTAT
NO
CHECK WIRING AND CONNECTIONS
YES
IS THERE 24 Vdc BETWEEN TERMINALS M5.3 ON PCB & RED WIRE ON HIGH LIMIT THERMOSTAT
NO
RESET THE HIGH LIMIT THERMOSTAT
YES
IS THERE 24 Vdc BETWEEN TERMINALS M5.3 AND M3.4 ON PCB
YES
NO
CHECK WIRING AND CONNECTIONS
IS THERE 24 Vdc BETWEEN TERMINALS M5.3 AND M3.5 ON PCB
YES
REPLACE THE CONTROL BOARD
NO
CHECK COMBUSTION AND CHECK &/OR REPLACE BURNER THERMISTOR AND WIRING
GREEN LED LIGHT
NO
CHECK WIRING AND CONNECTIONS, HIGH LIMIT THERMOSTAT OR PCB
YES
RESTART THE TEST

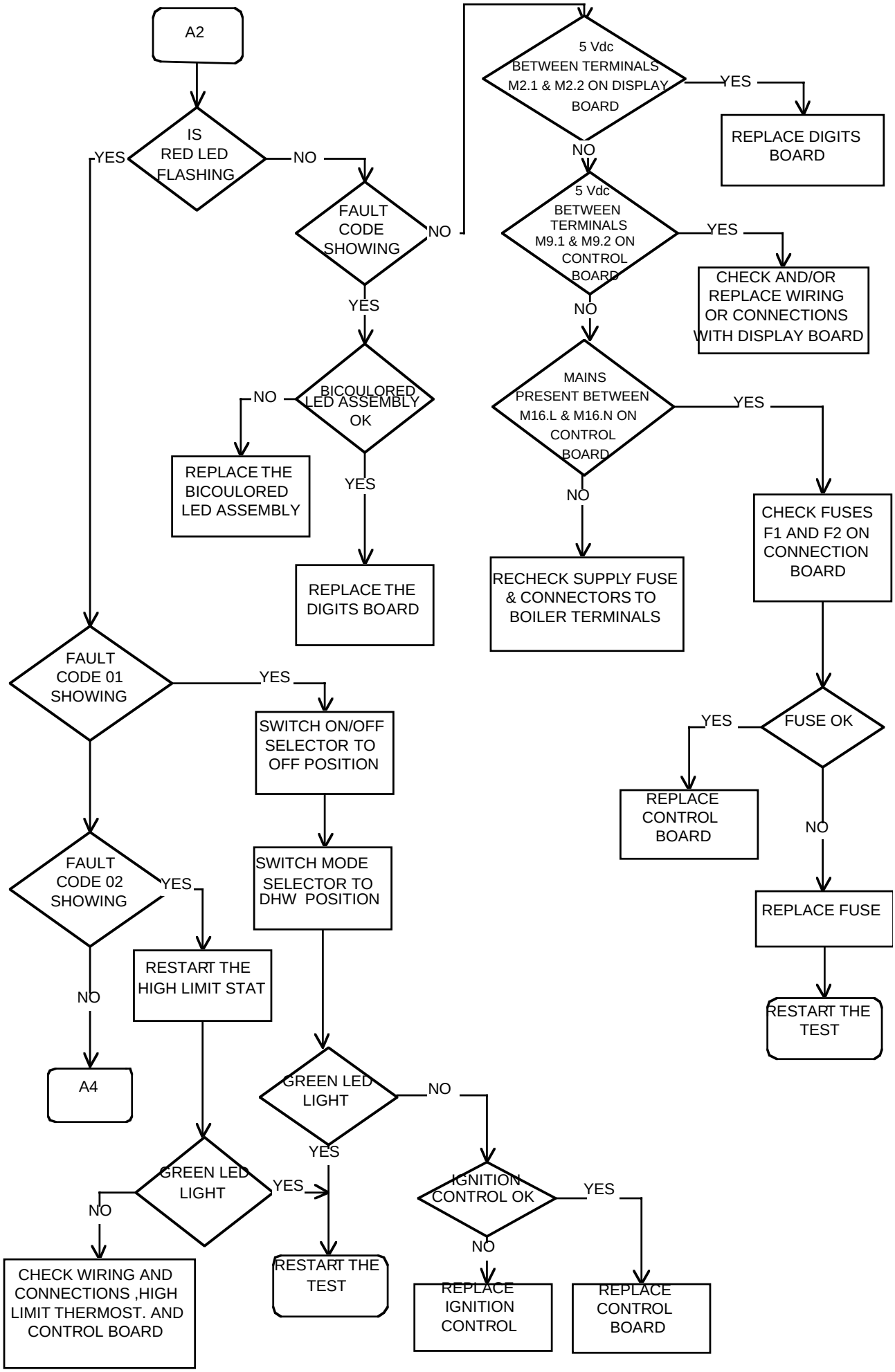
A2
IS RED LED FLASHING
YES
NO
FAULT CODE SHOWING
NO
YES
BICOULORED LED ASSEMBLY OK
NO
REPLACE THE BICOULORED LED ASSEMBLY
YES
REPLACE THE DIGITS BOARD
5 Vdc BETWEEN TERMINALS M2.1 & M2.2 ON DISPLAY BOARD
YES
REPLACE DIGITS BOARD
NO
5 Vdc BETWEEN TERMINALS M9.1 & M9.2 ON CONTROL BOARD
YES
CHECK AND/OR REPLACE WIRING OR CONNECTIONS WITH DISPLAY BOARD
NO
MAINS PRESENT BETWEEN M16.L & M16.N ON CONTROL BOARD
YES
NO
RECHECK SUPPLY FUSE & CONNECTORS TO BOILER TERMINALS
CHECK FUSES F1 AND F2 ON CONNECTION BOARD
FUSE OK
YES
REPLACE CONTROL BOARD
NO
REPLACE FUSE
RESTART THE TEST
FAULT CODE 01 SHOWING
YES
SWITCH ON/OFF SELECTOR TO OFF POSITION
SWITCH MODE SELECTOR TO DHW POSITION
FAULT CODE 02 SHOWING
YES
RESTART THE HIGH LIMIT STAT
NO
A4
GREEN LED LIGHT
NO
YES
GREEN LED LIGHT
YES
NO
CHECK WIRING AND CONNECTIONS ,HIGH LIMIT THERMOST. AND CONTROL BOARD
RESTART THE TEST
IGNITION CONTROL OK
YES
NO
REPLACE IGNITION CONTROL
REPLACE CONTROL BOARD

VOKERA
LINEA PLUS AG

Rev. 1 08/03/2000

TEST B : CHECK CONTROL IN DHW MODE

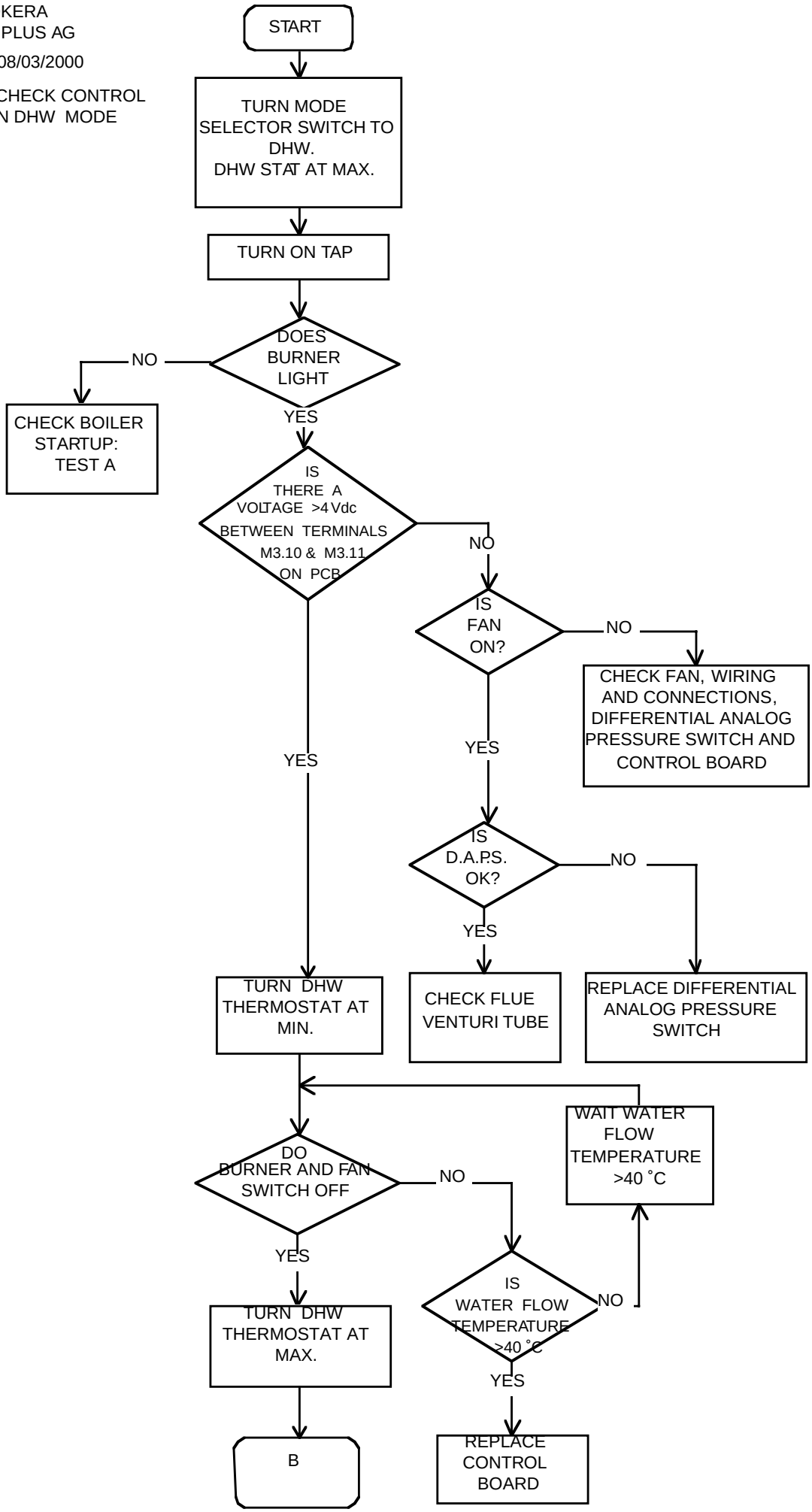

VOKERA
LINEA PLUS AG
Rev. 1 08/03/2000

TEST C: CHECK CONTROL
IN C/H MODE

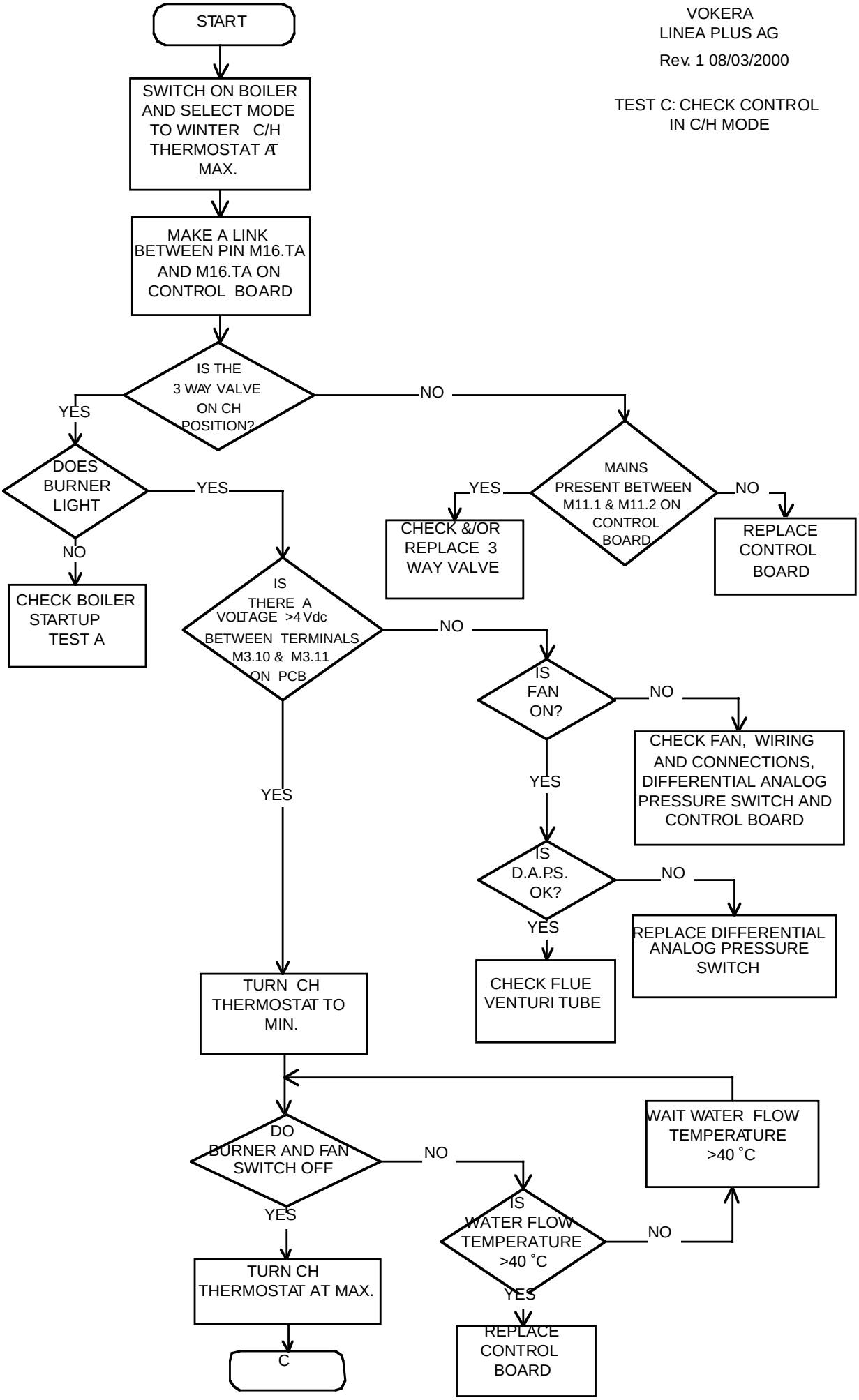

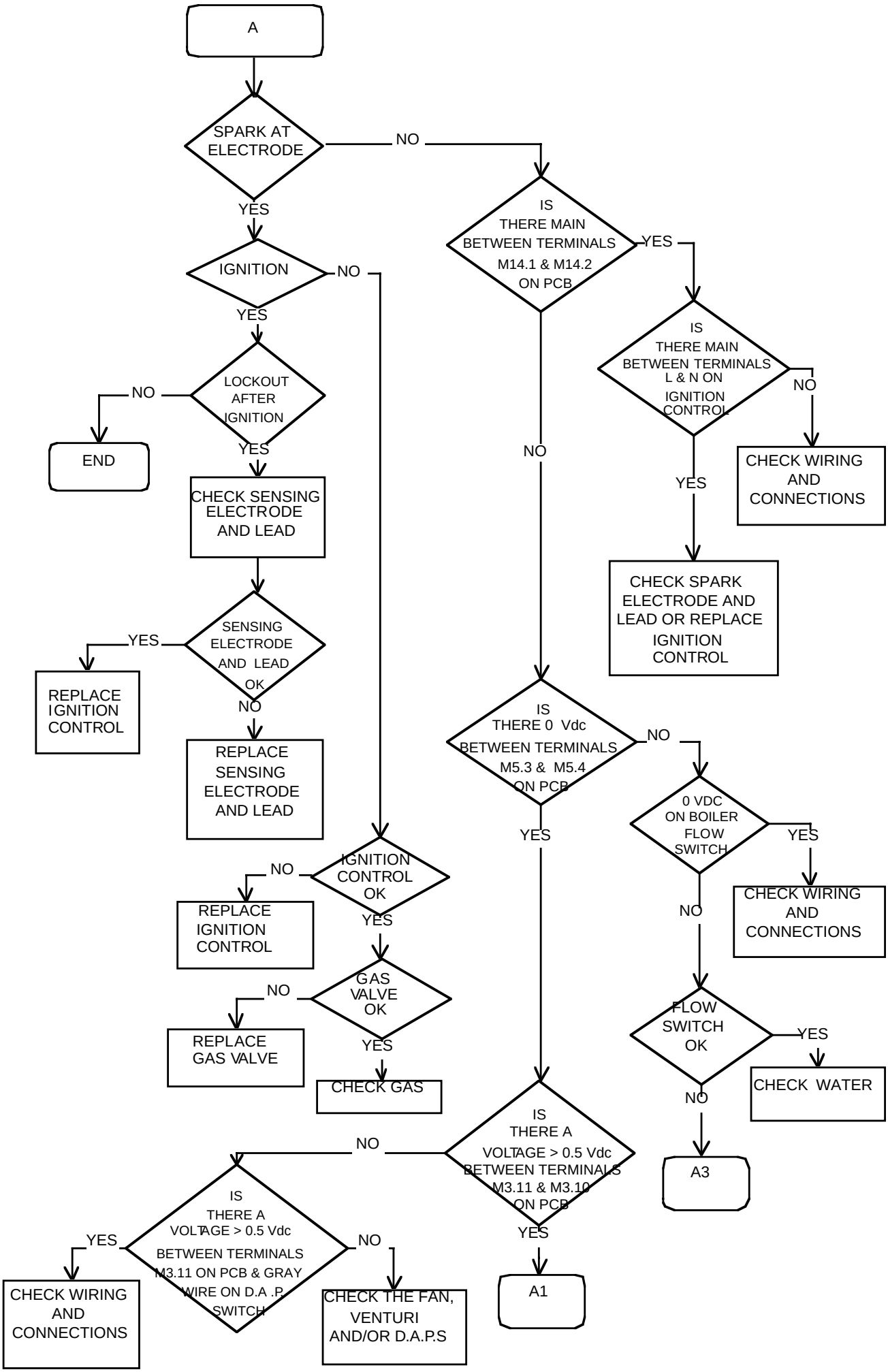
A
SPARK AT ELECTRODE
NO
YES
IGNITION
NO
YES
LOCKOUT AFTER IGNITION
NO
END
YES
CHECK SENSING ELECTRODE AND LEAD
SENSING ELECTRODE AND LEAD OK
YES
REPLACE IGNITION CONTROL
NO
REPLACE SENSING ELECTRODE AND LEAD
IGNITION CONTROL OK
NO
REPLACE IGNITION CONTROL
YES
GAS VALVE OK
NO
REPLACE GAS VALVE
YES
CHECK GAS
IS THERE MAIN BETWEEN TERMINALS M14.1 & M14.2 ON PCB
YES
IS THERE MAIN BETWEEN TERMINALS L & N ON IGNITION CONTROL
NO
CHECK WIRING AND CONNECTIONS
YES
CHECK SPARK ELECTRODE AND LEAD OR REPLACE IGNITION CONTROL
NO
IS THERE 0 Vdc BETWEEN TERMINALS M5.3 & M5.4 ON PCB
NO
0 VDC ON BOILER FLOW SWITCH
YES
CHECK WIRING AND CONNECTIONS
NO
FLOW SWITCH OK
YES
CHECK WATER
NO
A3
YES
IS THERE A VOLTAGE > 0.5 Vdc BETWEEN TERMINALS M3.11 & M3.10 ON PCB
NO
IS THERE A VOLTAGE > 0.5 Vdc BETWEEN TERMINALS M3.11 ON PCB & GRAY WIRE ON D.A .P. SWITCH
YES
CHECK WIRING AND CONNECTIONS
NO
CHECK THE FAN, VENTURI AND/OR D.A.P.S
YES
A1

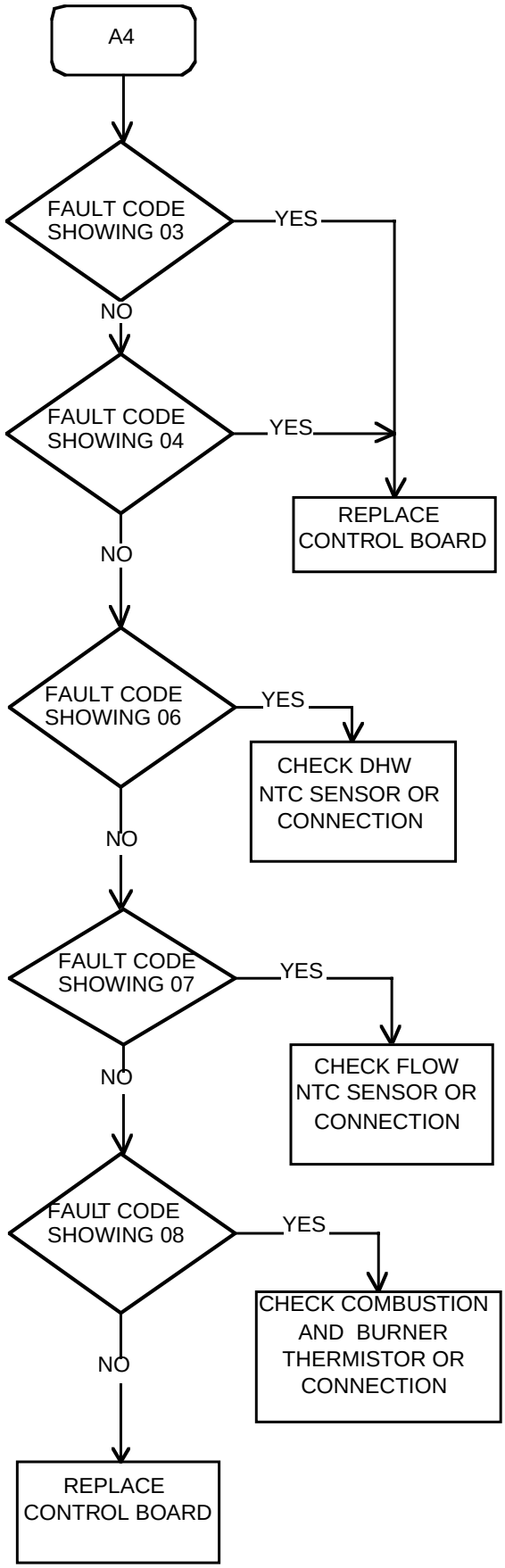
A4
FAULT CODE SHOWING 03
YES
NO
FAULT CODE SHOWING 04
YES
REPLACE CONTROL BOARD
NO
FAULT CODE SHOWING 06
YES
CHECK DHW NTC SENSOR OR CONNECTION
NO
FAULT CODE SHOWING 07
YES
CHECK FLOW NTC SENSOR OR CONNECTION
NO
FAULT CODE SHOWING 08
YES
CHECK COMBUSTION AND BURNER THERMISTOR OR CONNECTION
NO
REPLACE CONTROL BOARD

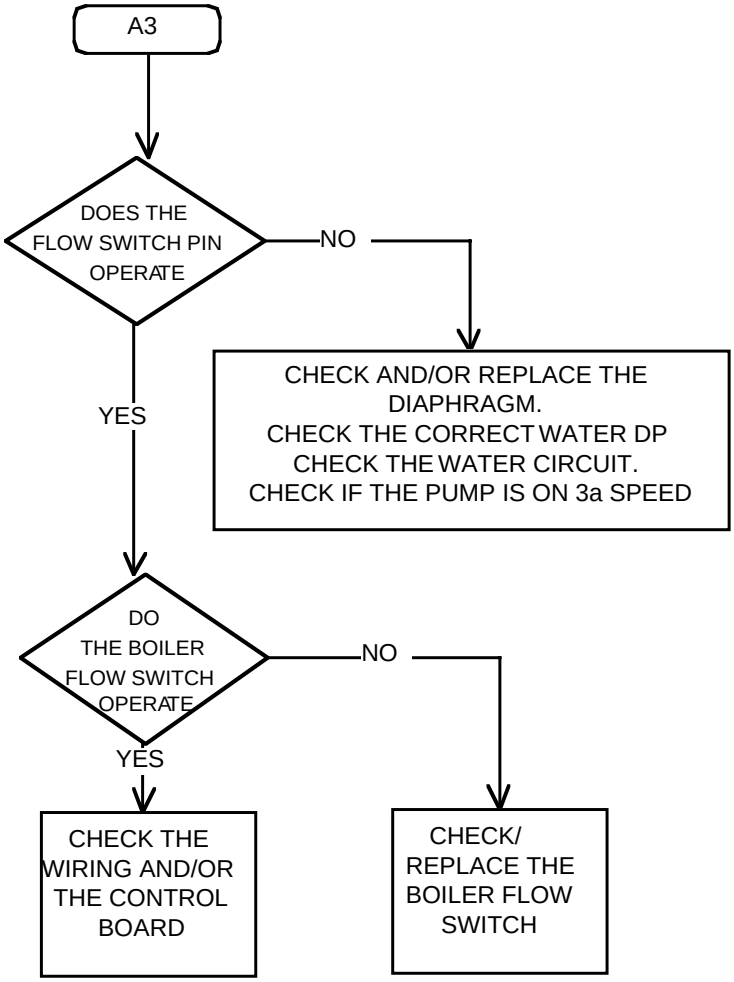
A3
DOES THE FLOW SWITCH PIN OPERATE
NO
CHECK AND/OR REPLACE THE DIAPHRAGM.
CHECK THE CORRECT WATER DP
CHECK THE WATER CIRCUIT.
CHECK IF THE PUMP IS ON 3a SPEED
YES
DO THE BOILER FLOW SWITCH OPERATE
NO
YES
CHECK THE WIRING AND/OR THE CONTROL BOARD
CHECK/ REPLACE THE BOILER FLOW SWITCH

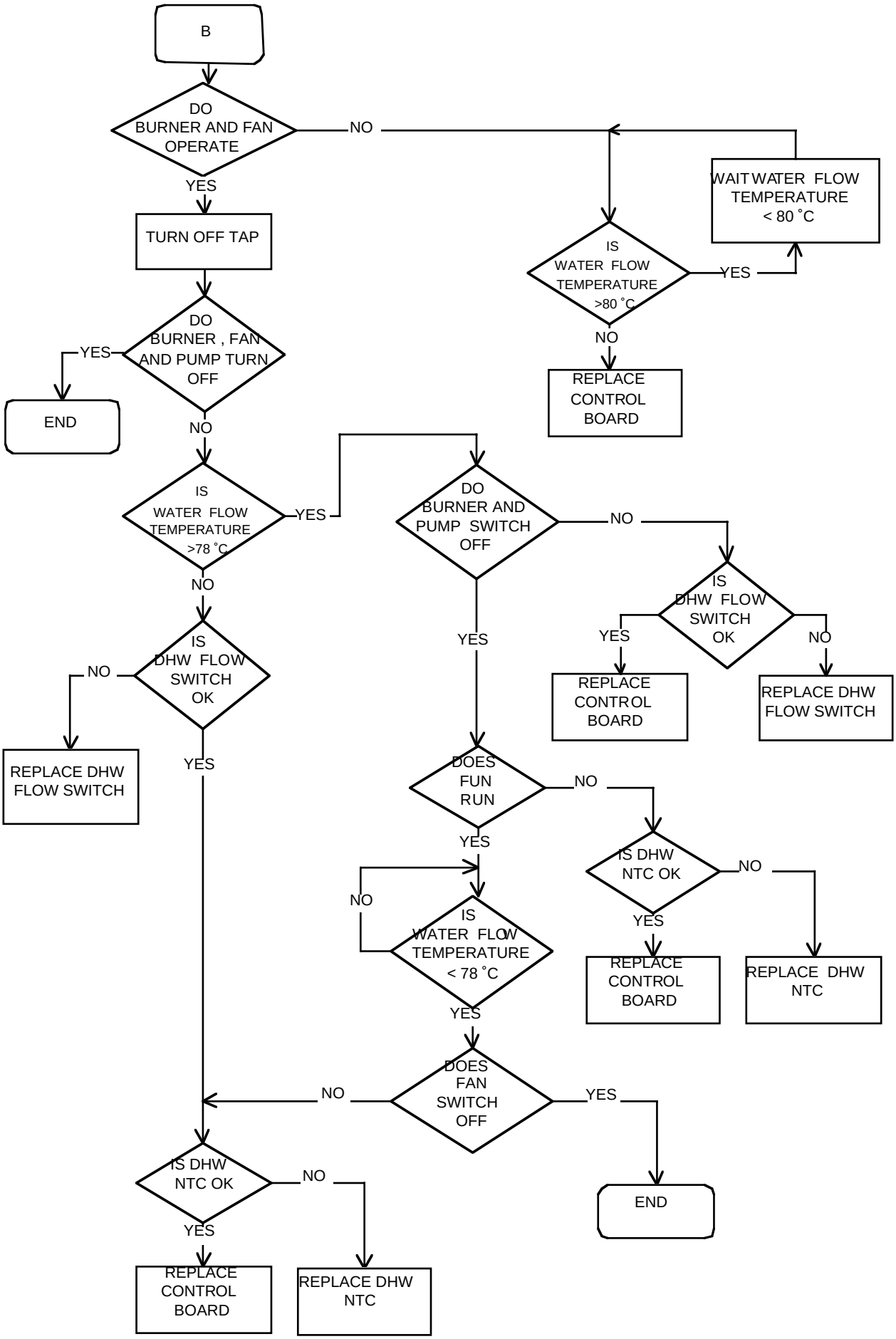
B
DO BURNER AND FAN OPERATE
NO
YES
TURN OFF TAP
WAIT WATER FLOW TEMPERATURE < 80 ˚C
IS WATER FLOW TEMPERATURE >80 ˚C
YES
NO
REPLACE CONTROL BOARD
DO BURNER , FAN AND PUMP TURN OFF
YES
END
NO
IS WATER FLOW TEMPERATURE >78 ˚C
YES
NO
DO BURNER AND PUMP SWITCH OFF
NO
IS DHW FLOW SWITCH OK
YES
NO
REPLACE CONTROL BOARD
REPLACE DHW FLOW SWITCH
IS DHW FLOW SWITCH OK
NO
REPLACE DHW FLOW SWITCH
YES
YES
DOES FUN RUN
NO
YES
IS DHW NTC OK
NO
YES
REPLACE CONTROL BOARD
REPLACE DHW NTC
NO
IS WATER FLOW TEMPERATURE < 78 ˚C
YES
DOES FAN SWITCH OFF
NO
YES
END
IS DHW NTC OK
NO
YES
REPLACE CONTROL BOARD
REPLACE DHW NTC

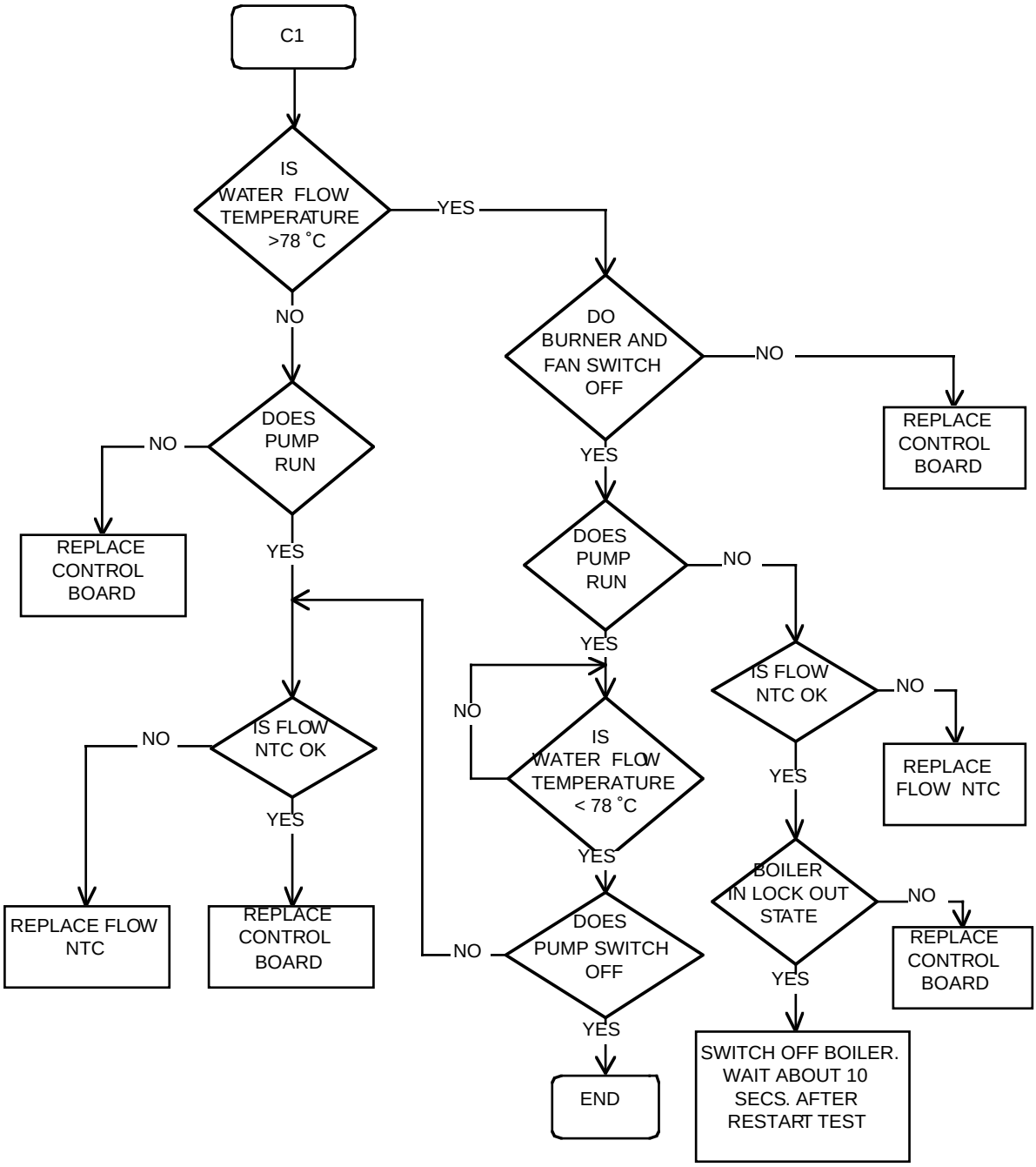
C1
IS WATER FLOW TEMPERATURE >78 ˚C
YES
NO
DO BURNER AND FAN SWITCH OFF
NO
REPLACE CONTROL BOARD
YES
DOES PUMP RUN
NO
REPLACE CONTROL BOARD
YES
DOES PUMP RUN
NO
YES
IS FLOW NTC OK
NO
REPLACE FLOW NTC
YES
BOILER IN LOCK OUT STATE
NO
REPLACE CONTROL BOARD
YES
SWITCH OFF BOILER. WAIT ABOUT 10 SECS. AFTER RESTART TEST
IS WATER FLOW TEMPERATURE < 78 ˚C
NO
YES
DOES PUMP SWITCH OFF
NO
YES
END
IS FLOW NTC OK
NO
REPLACE FLOW NTC
YES
REPLACE CONTROL BOARD

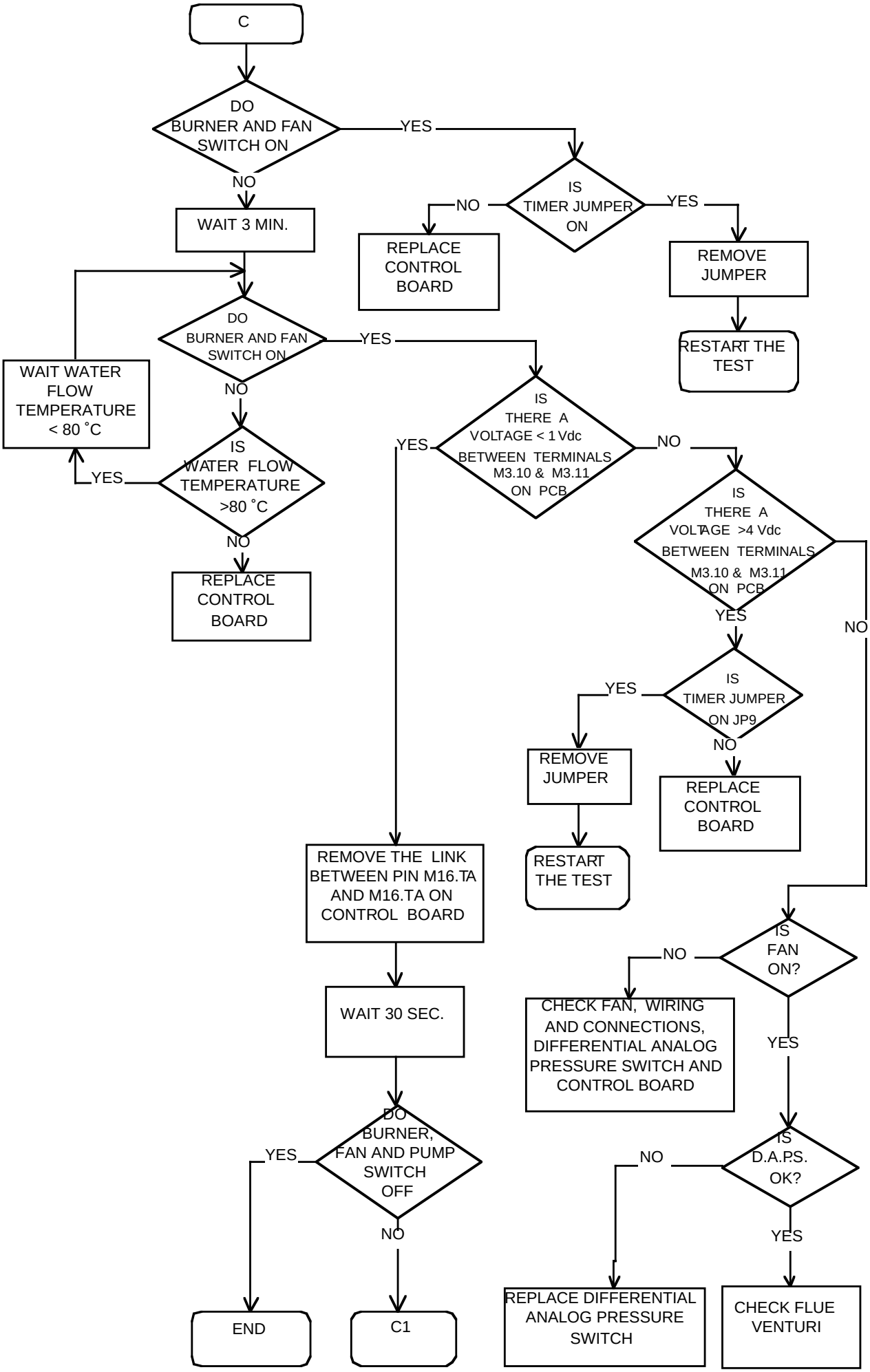
C
DO BURNER AND FAN SWITCH ON
YES
NO
WAIT 3 MIN.
IS TIMER JUMPER ON
NO
YES
REPLACE CONTROL BOARD
REMOVE JUMPER
RESTART THE TEST
DO BURNER AND FAN SWITCH ON
YES
NO
WAIT WATER FLOW TEMPERATURE < 80 °C
IS WATER FLOW TEMPERATURE >80 °C
YES
NO
REPLACE CONTROL BOARD
IS THERE A VOLTAGE < 1 Vdc BETWEEN TERMINALS M3.10 & M3.11 ON PCB
YES
NO
IS THERE A VOLTAGE >4 Vdc BETWEEN TERMINALS M3.10 & M3.11 ON PCB
YES
NO
IS TIMER JUMPER ON JP9
YES
NO
REMOVE JUMPER
RESTART THE TEST
REPLACE CONTROL BOARD
REMOVE THE LINK BETWEEN PIN M16.TA AND M16.TA ON CONTROL BOARD
WAIT 30 SEC.
IS FAN ON?
NO
YES
CHECK FAN, WIRING AND CONNECTIONS, DIFFERENTIAL ANALOG PRESSURE SWITCH AND CONTROL BOARD
DO BURNER, FAN AND PUMP SWITCH OFF
YES
NO
IS D.A.P.S. OK?
NO
YES
END
C1
REPLACE DIFFERENTIAL ANALOG PRESSURE SWITCH
CHECK FLUE VENTURI

Instructions for **(A)** Fitting Vokèra 24 Hour Time Switch (Part No. 201) and Vokèra Digital 7 Day Time Switch (Part No. 202)
(B) Wiring to external Time Switches and Room Thermostat
(C) Wiring for 'S' & 'Y' Plan Installations.

A. Installation of the Vokèra time switches (24 Hr and 7 Day)

Remove printed circuit board cover (5 screws).

Remove the clock aperture blanking plate (1) fig.1 by squeezing the 4 lugs on the rear of the plate together and push the plate out.

Remove the central circular disk from the plate (some force is necessary to break the holding nibs).

Remove the clock from its box.

Wire the clock as shown in fig. 2. The wiring loom to the clock comes complete with 4 spade connectors (for connection to the clock terminals), and a multi-plug for connection to the clock loom pre assembled on the appliance.

Replace the clock blanking plate back into the fascia of the appliance.

Insert the clock into the aperture from the back of the control panel, and secure the clock to the front control panel using the four screws provided.

Identify the internal clock wiring loom and disconnect the end plug. Push fit the multi-plug onto the multi-plug connector connected to the time clock. The multi-plug connector is polarised, it is therefore only possible to connect the multi-plugs one way.

When all electrical connections are made replace printed circuit board cover.

NO EXTERNAL OR INTERNAL CONTROLS

The loop between terminals = & TA remains when no external or internal controls are used (as fig. 5).

ROOM THERMOSTAT

Remove the loop between terminals = & TA and connect room thermostat between TA & TA (as fig. 6).

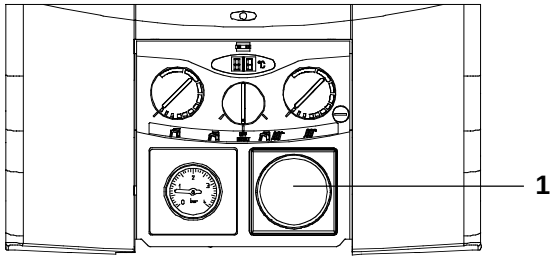

Fig. 1

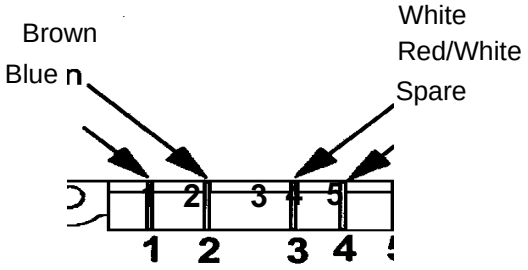

Fig. 2

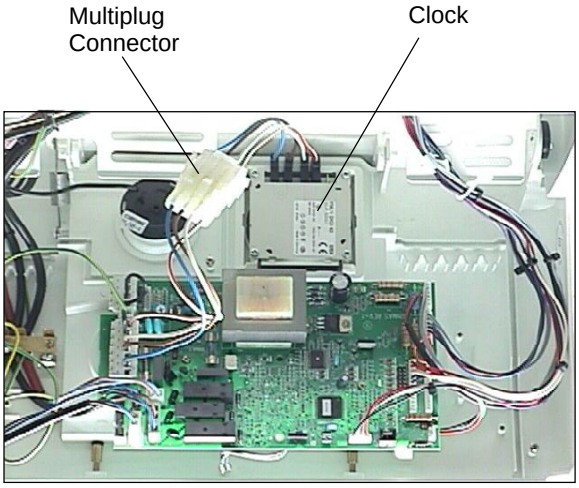

Fig.3

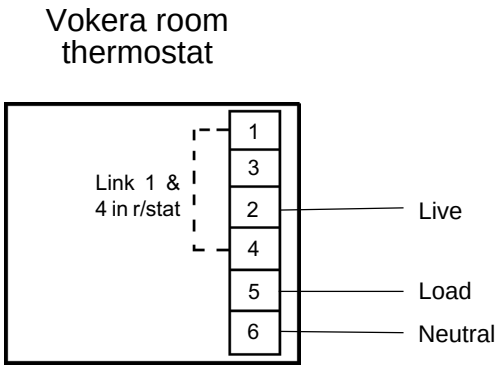

Fig. 4

Fig. 5

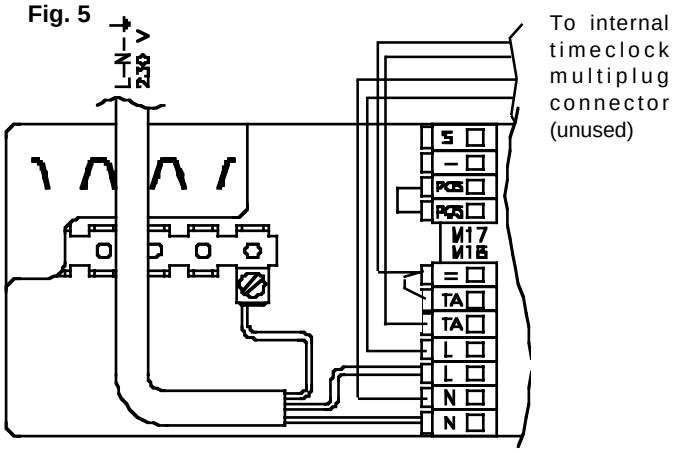

IMPORTANT

DO NOT USE SMALLER TERMINAL BLOCK MARKED 'POS' 'POS' '-''S' WHEN CONNECTING INTERNAL OR EXTERNAL ELECTRICAL CONTROLS.

Fig. 5 Showing 230v input electrical connection without room thermostat or internal time clock
(Internal wiring loom for timeclock and link between = & TA remains)

Fig. 6

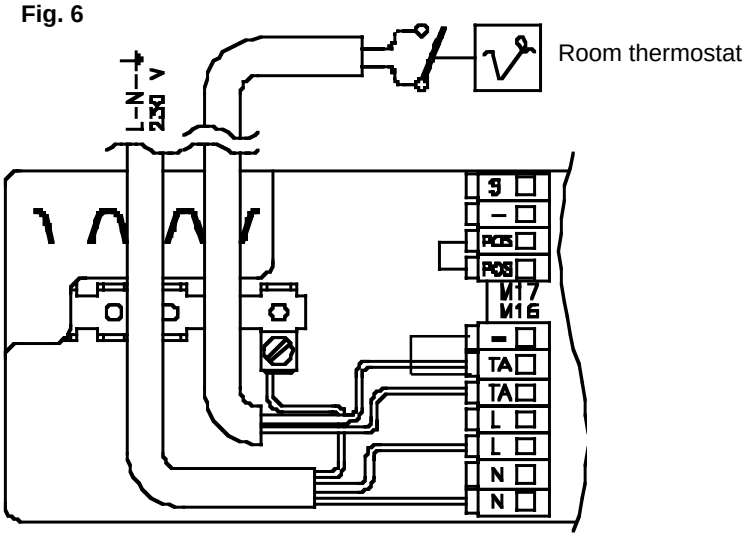

Fig. 6 Showing 230v input electrical connection and room thermostat connection (connected between TA & TA) without internal time clock. (Remove link between = & TA).
Note: room thermostat contact rated at 230v. Should the room thermostat require a neutral or earth, connect neutral to one of the terminals marked N, and the earth to the earthing strip.

Fig. 7

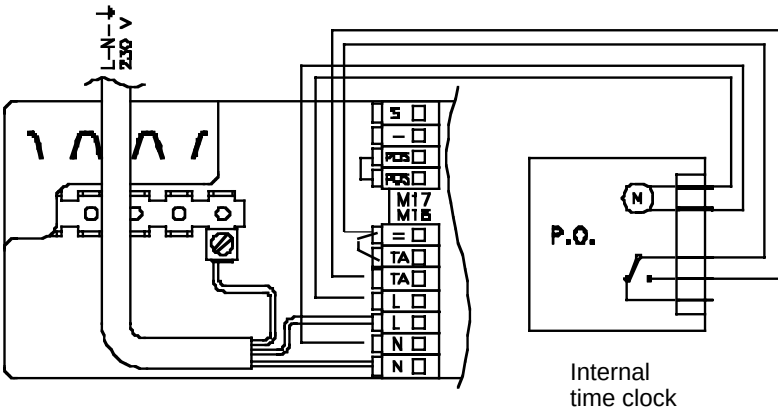

Fig. 7 Showing 230v input electrical connection and internal timer without room thermostat.
Note: DO NOT remove link between terminals = & TA.

Fig. 8

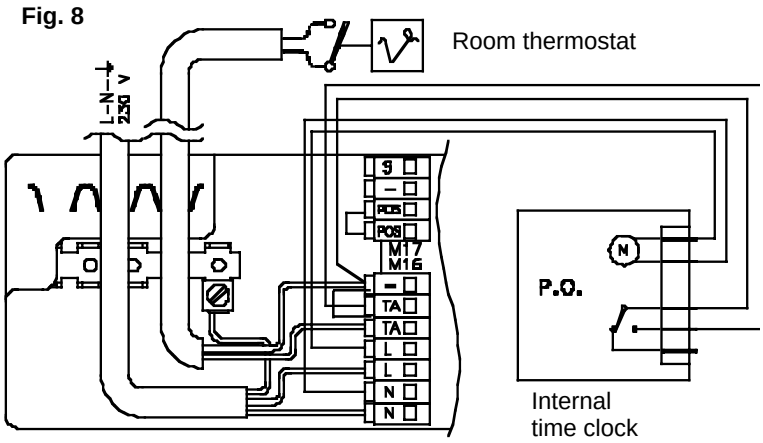

Fig. 8 showing 230v input electrical connection internal timer and room thermostat.
Note:
i) Room thermostat contact rated at 230v. Should the room thermostat require a neutral or earth, connect neutral to one of the terminals marked N, and the earth to the earthing strip.
ii) Terminal marked = is a spare terminal used to connect controls. (Remove link between = & TA)

B. Wiring to External Time Switches and Thermostats.

Earths have been omitted for clarity

(i) General Schematic Diagram.

To ease wiring congestion at the appliance terminal strip, remove the wiring harness normally used for internal clock connection.

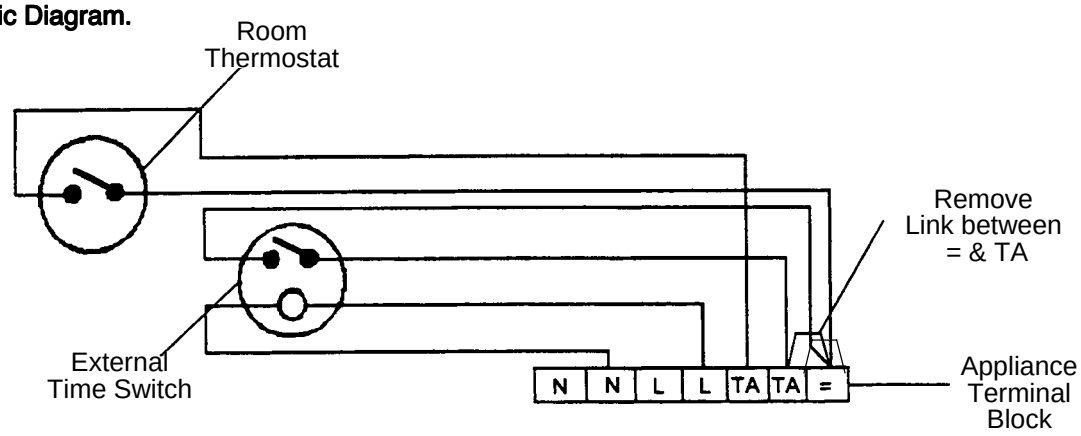

(ii) ACL Time Switch and Typical Room Thermostat

Earths have been omitted for clarity

To ease wiring congestion at the appliance terminal strip, remove the wiring harness normally used for internal clock connection.

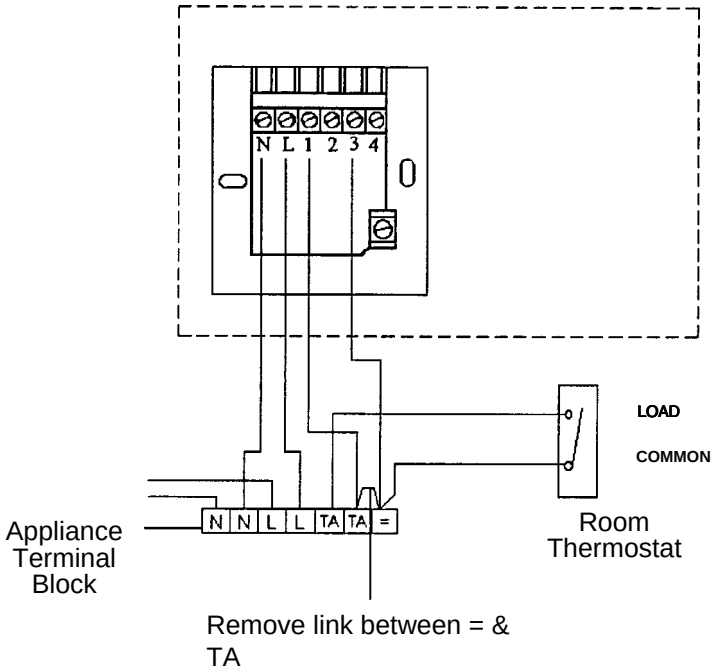

ACL Lifestyle
LP111 or LP711

Do not link L & 1

(iii) Randall Time Switch and Vokera Room Thermostat.

Earths have been omitted for clarity

To ease wiring congestion at the appliance terminal strip, remove the wiring harness normally used for internal clock connection.

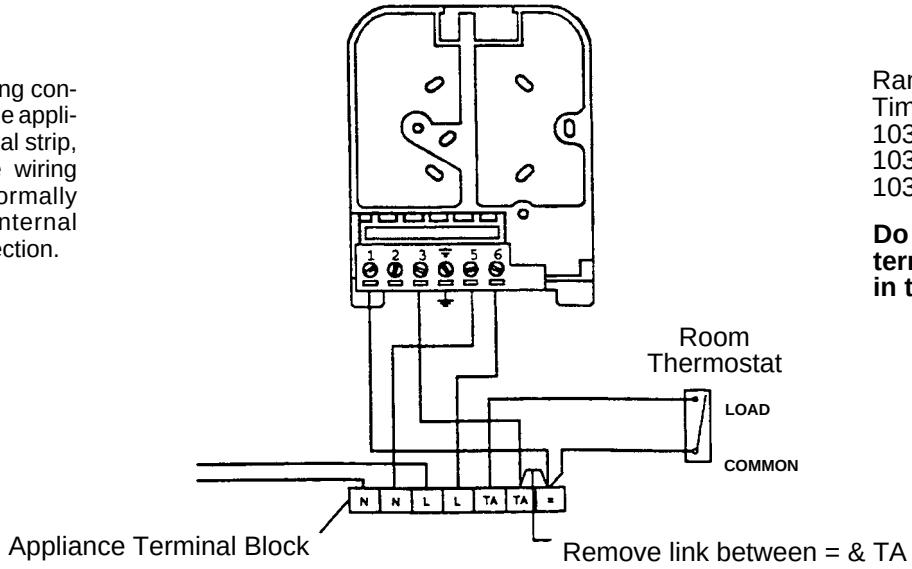

Randall
Time switches
103
103E
103E7

Do not link terminals 3 & 6 in time switch

C. Wiring for 'S' Plan Installations.

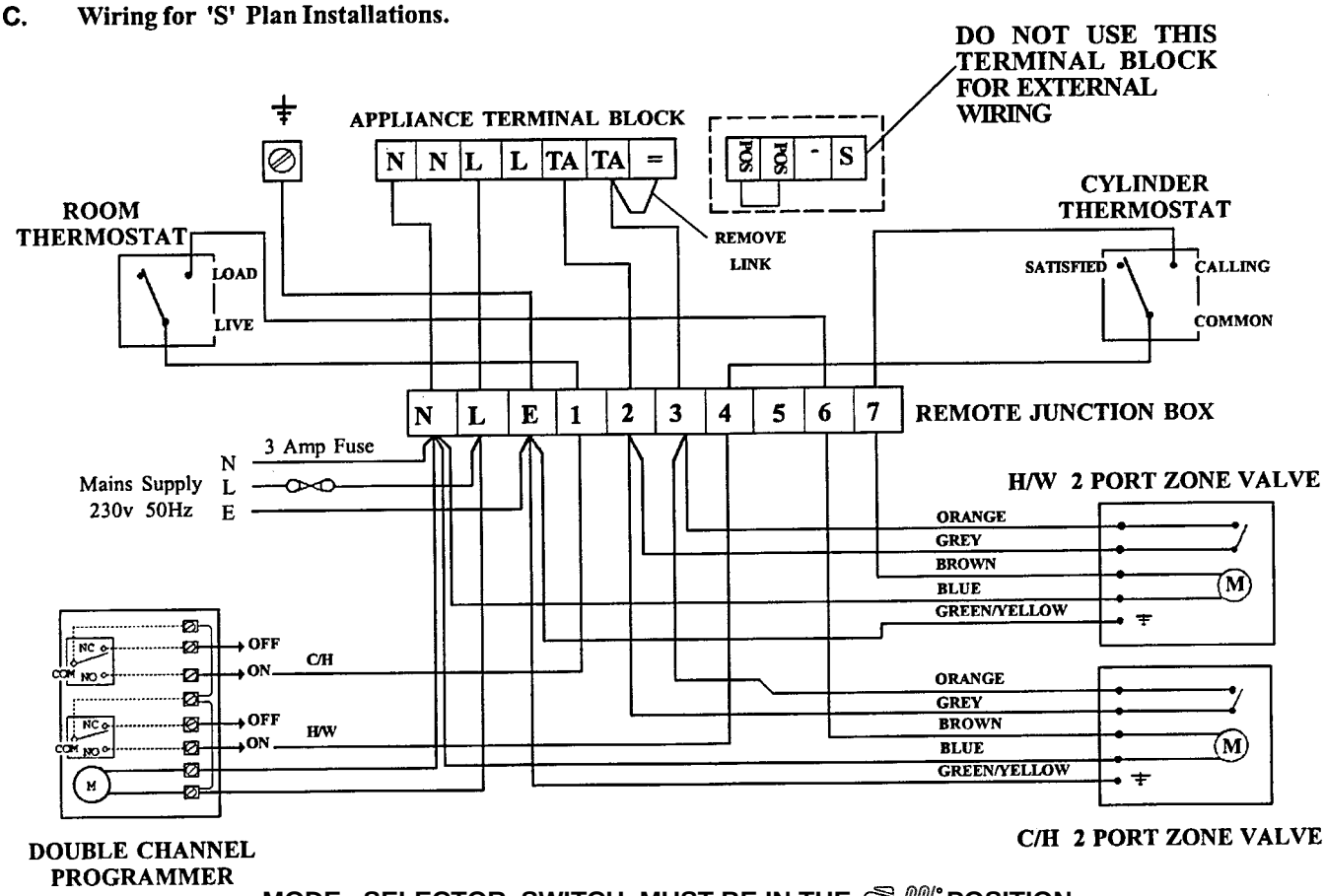

MODE SELECTOR SWITCH MUST BE IN THE POSITION.

To ease wiring conjestion at the appliance terminal strip, remove the wiring harness normally used for internal clock connection.

Wiring for 'Y' Plan Installations.

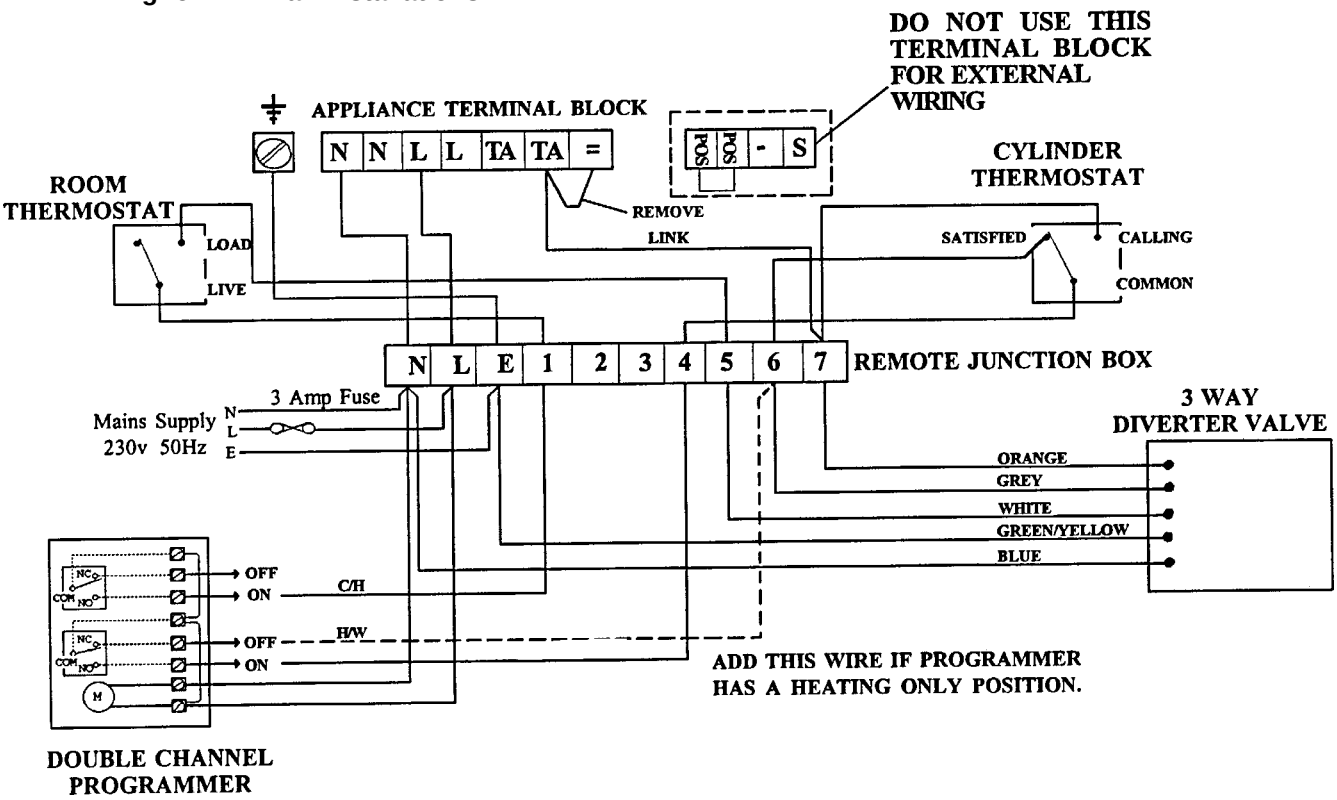

NOTE: WHEN USING A 'Y' PLAN INSTALLATION THE MODE SELECTOR SWITCH WILL BE OVERRIDEN BY THE CONTROL CIRCUIT.

To ease wiring conjestion at the appliance terminal strip, remove the wiring harness normally used for internal clock connection.

EXPLODED DIAGRAMS

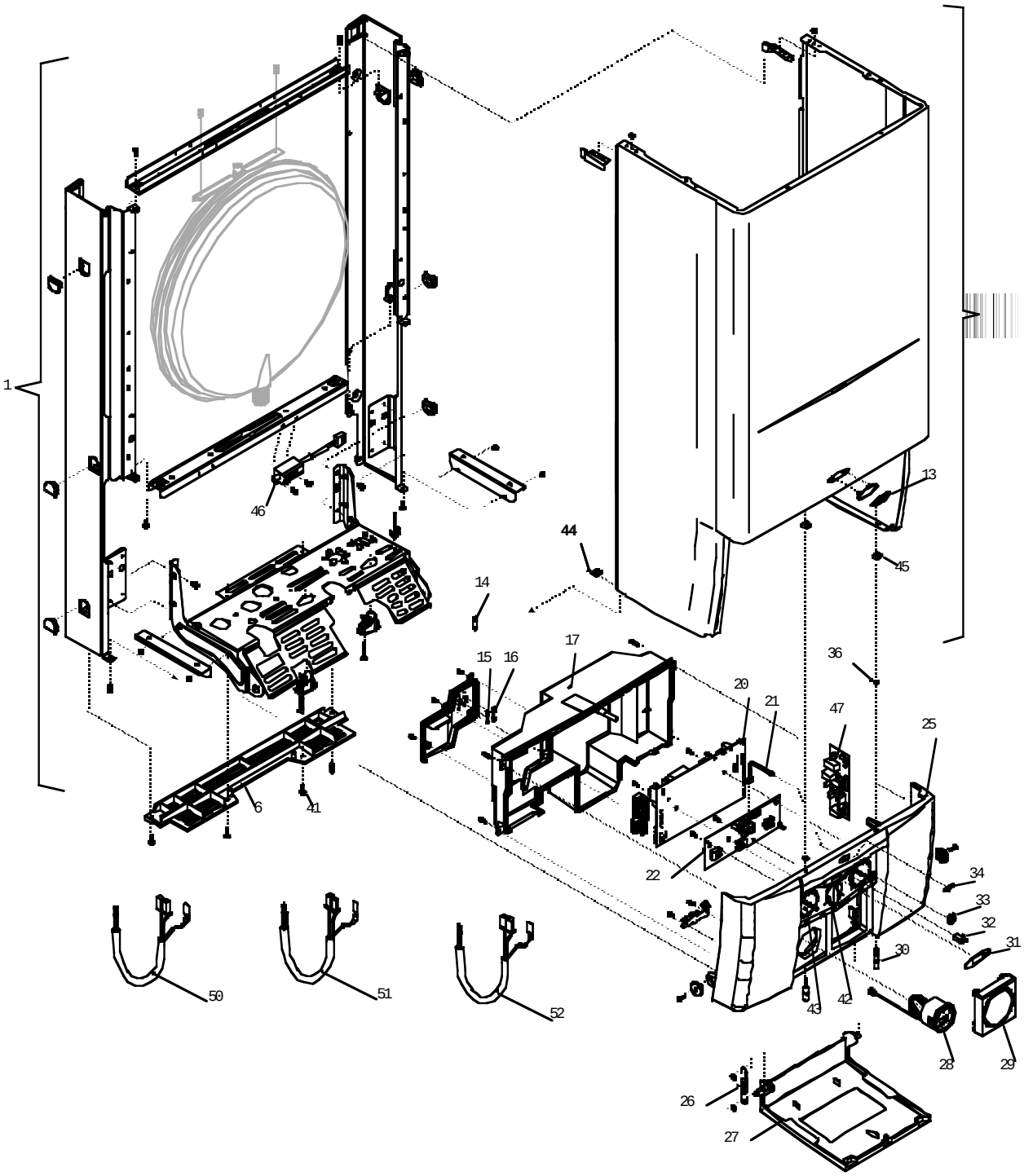

KEY	DESCRIPTION	PLUS AG
1	Frame	01005212
6	Guard	1913
9	Case	2062
13	Plastic Trade Mark Label	1781
14	3A fuse	3478
15	2A fuse	8968
16	100 mA fuse	1947
17	Cover	10021849
20	Printed Circuit Board	1847
21	Led Light Guide	1858
22	Printed Circuit Board	10020477
25	Instrumental panel	10022029
27	Door panel	1996
28	Quick primer pressure gauge	1857
29	Hole cap	8654
30	Pin	1867
31	Film for display	1865
32	Push-push cover	1864
33	Hole cap	1861
34	Protection film	1866
36	O ring	1869
41	Screw	5080
42	Selector knob kit	01005072
43	Control knob kit	01005073
44	Edge clip	5128
45	Nut	5230
46	Transformer	10022659
47	Ignition module	10021848
50	Wiring harness	10021117
51	Wiring harness	1980
52	Wiring harness	1780

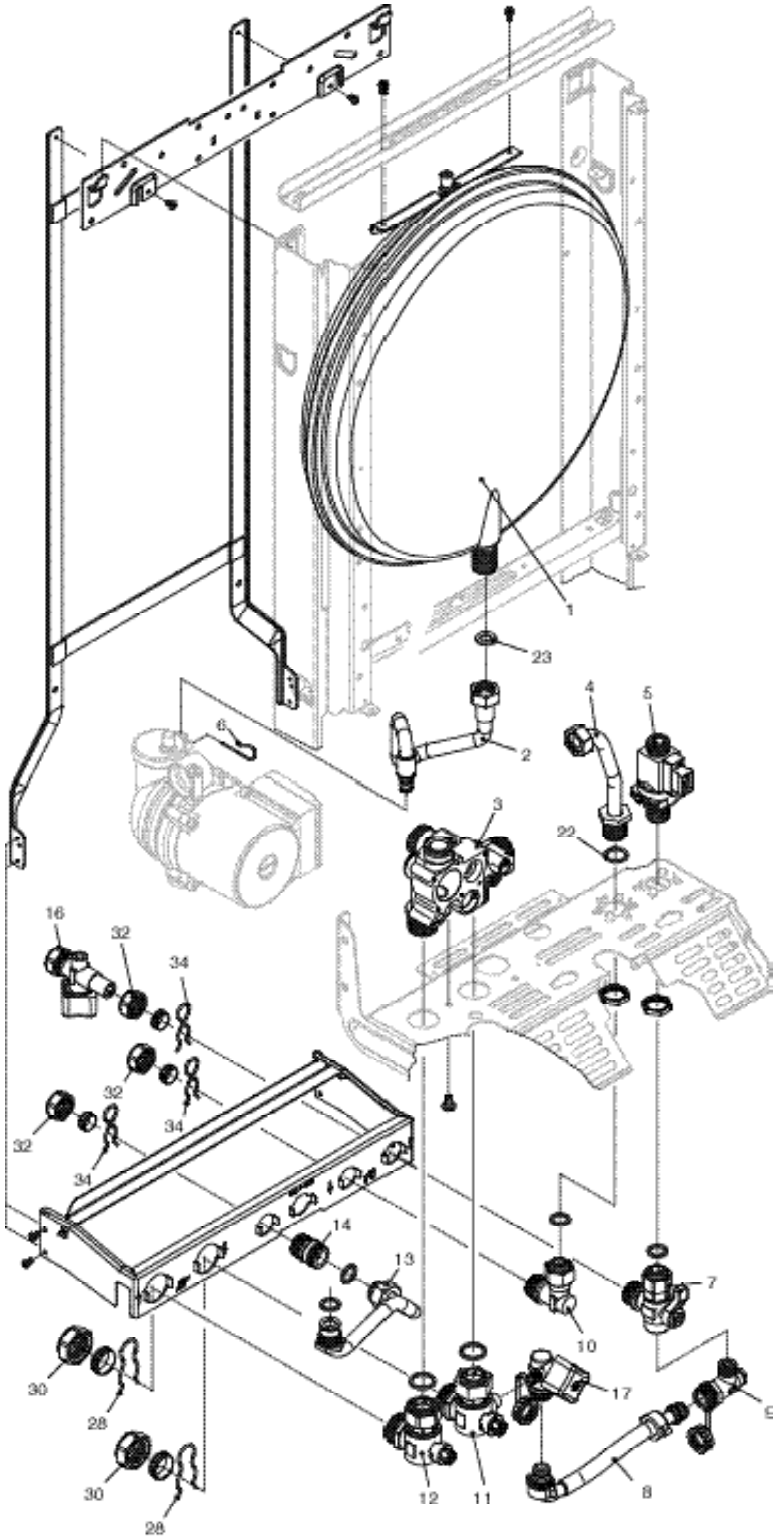

KEY	DESCRIPTION	PLUS AG			
1	Expansion vessel	2573	12	Heating cock	1789
2	Flexible pipe	2164	13	Pipe	10023643
3	Heating distributor manifold	10020439	14	Nipple	1793
4	Pipe	10023211	16	Water supply stop cock	1749
5	DHW actuator	10020330	17	Water supply stop cock	10023568
6	Clip	2165	22	Washer	5208
7	Water supply stop cock	10023567	23	Washer	5026
8	Flexible pipe	10023570	28	Clip	1820
9	Non return valve	10023569	30	Nut	1824
10	Connection	1790	32	Nut	1823
11	Heating cock	10023566	34	Clip	1890

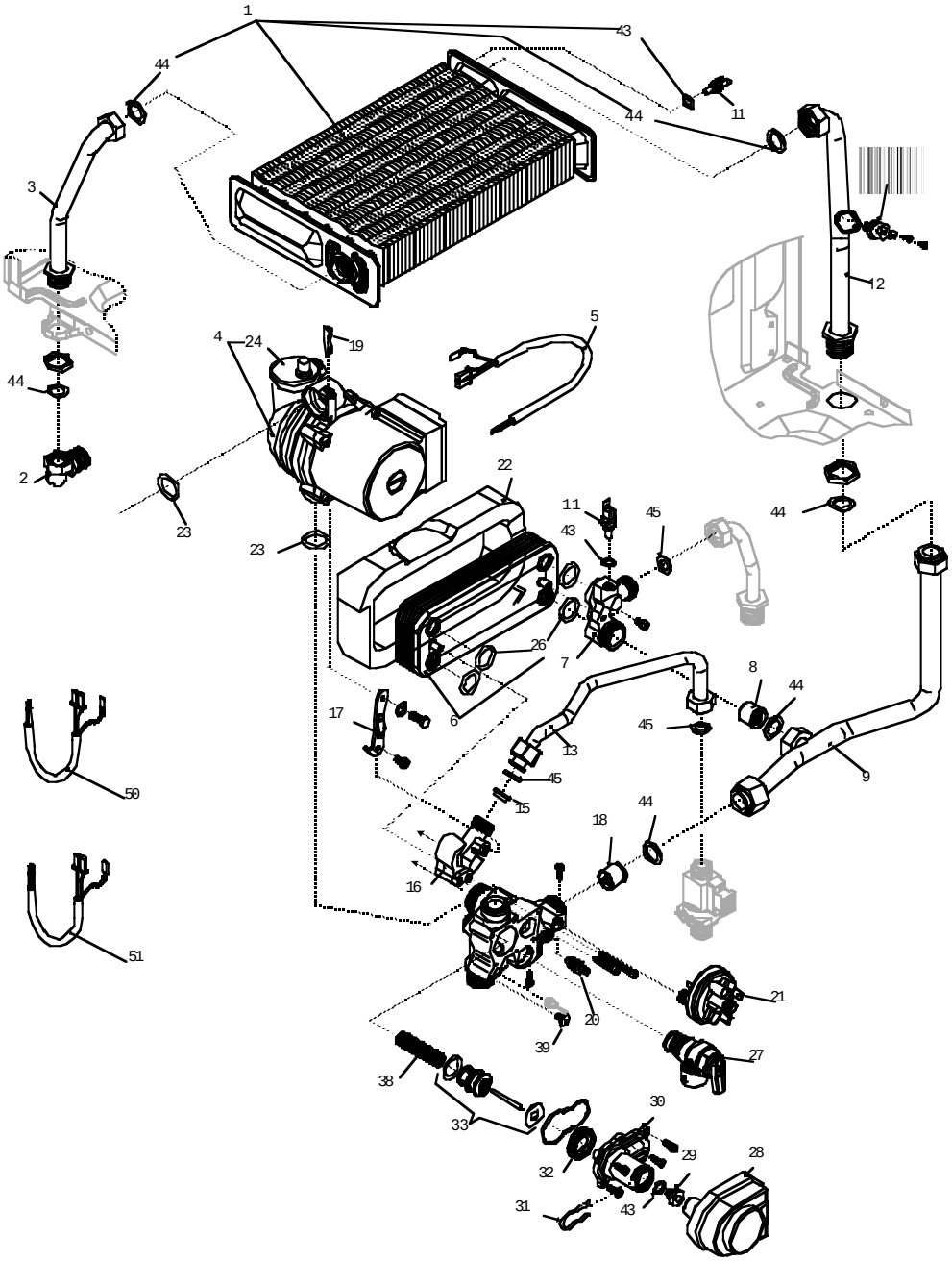

KEY	DESCRIPTION	PLUS AG			
1	Heat exchanger	10020513	21	Pressure switch	2044
2	Pipe	10023209	22	Heat insulator	1988
3	Pipe	2051	23	O ring	6898
4	Pump	10020438	24	Automatic air vent bottle	0439
5	Wiring harness	1845	26	O ring	7999
6	Domestic water heat exchanger	1957	27	Safety valve	1806
7	Connection	9807	28	Motorized valve	2905
8	Non return valve	2908	29	O ring connection	6919
9	Pipe	10023208	30	Three way valve cover	2904
10	Hight limit thermostat	2258	31	Fixing fork wrench	2906
11	NTC sensor	8484	32	Seating plate	7134
12	Pipe	10020519	33	Three way valve overhault kit	01005127
13	Pipe	10023210	38	Spring	6862
15	Flow governor	9430	39	Screw	6903
16	Connection	2903	43	Washer	5041
17	Bracket	2940	44	Washer	5023
18	By-pass valve	1552	45	Washer	5026
19	Pump lock key	9263	50	Wiring harness	10020530
20	Venting plugs kit	01005137	51	Wiring harness	1873

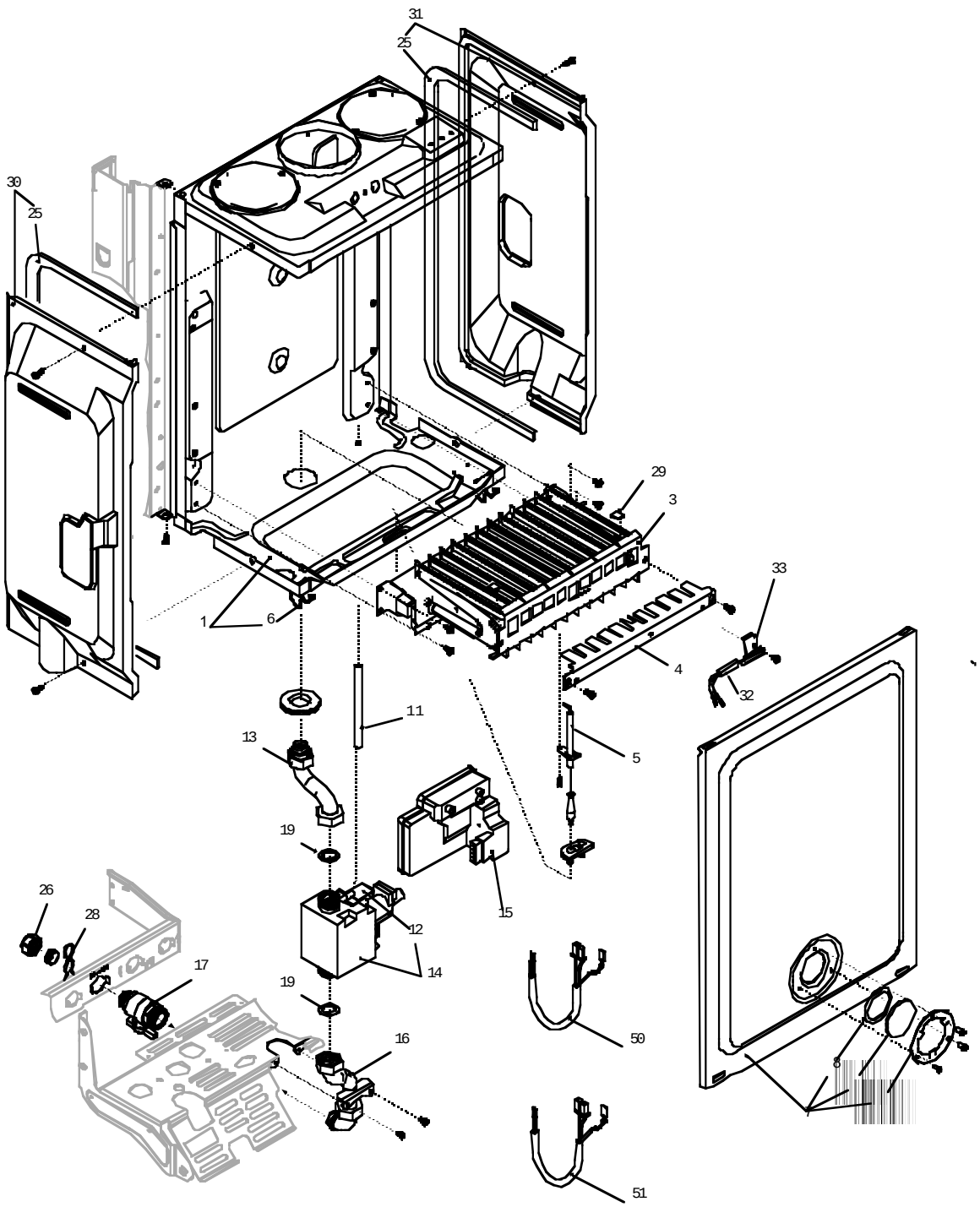

KEY	DESCRIPTION	PLUS AG			
1	Air box bottom	10022390	16	Gas pipe	1840
4	NG Burner NP	10020511	17	Gas cock	1787
4	LPG burner NP	10020512	19	Washer	5023
5	Spark electrode	10022027	25	Washer	5905
6	Air box clip	0442	26	Nut	1823
7	Cover	2058	28	Clip	1890
8	Washer	5072	30	Air box side	2060
9	Glass	3139	31	Air box side	2059
10	Glass flange	4007	32	Burner thermostat	2600
12	Gas valve solenoid	10020838	33	Bracket	2762
13	Gas pipe	1839	50	Wiring harness	10021947
14	Gas valve	10021021	51	Wiring harness	10022112

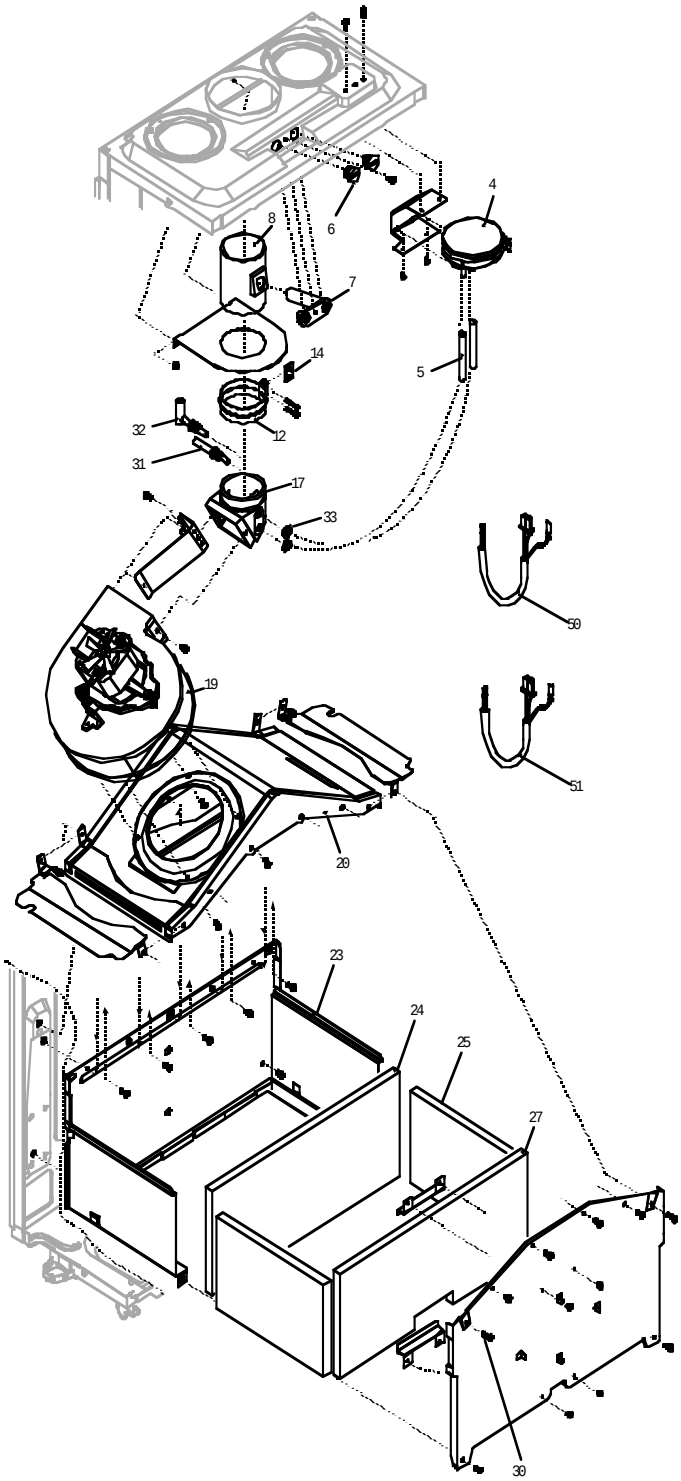

KEY	DESCRIPTION	PLUS AG			
4	Pressure differential switch	2677	24	Combustion chamber lateral panel	5271
5	Silicone tube	1457	27	Combustion chamber front panel	10020517
6	Brass cap	8086	30	Self tapping screw	5080
7	Block with combustion analysis check	8085	31	Depressure tube	6985
8	Fan flue connection	8083	32	Pressure tube	7948
12	Clamp for 60 diam. tube	5916	33	1/8" lock nut	4807
14	Washer clamp	5917	50	Wiring harness	1870
17	Fan to flue connector	7280	51	Wiring harness	10020529
19	Fan	2076			
20	Hood assembly	1968			
23	Combustion chamber assembly	10020514			
24	Combustion chamber back panel	10020518			

ABLING AND DISABLING ELECTRONIC FUNCTIONS

Certain electronic functions on the Linea range of appliances can be abled or disabled according to customer preference. The selections can be made by the addition or removal of jumper tags situated on the printed circuit board. Refer to fig. 40 for jumper positions on printed circuit board.

Hot Water Preheat Function:
To disable remove jumper JP6
To able add jumper to JP6

C/H Delay Timer:
To disable add jumper to JP9
To able remove jumper from JP9

Natural Gas / LPG
For Nat gas add jumper to JP8
For LPG remove jumper from JP8

Jumpers JP1, JP2, JP3, JP4, JP5 and JP7 also exist on the printed circuit board **DO NOT** under any circumstances add or remove jumpers at these points.

Spare jumpers are available from Vokera stockists. Part no. 7232.

FUNCTIONAL FLOW DIAGRAM

Fig. 39

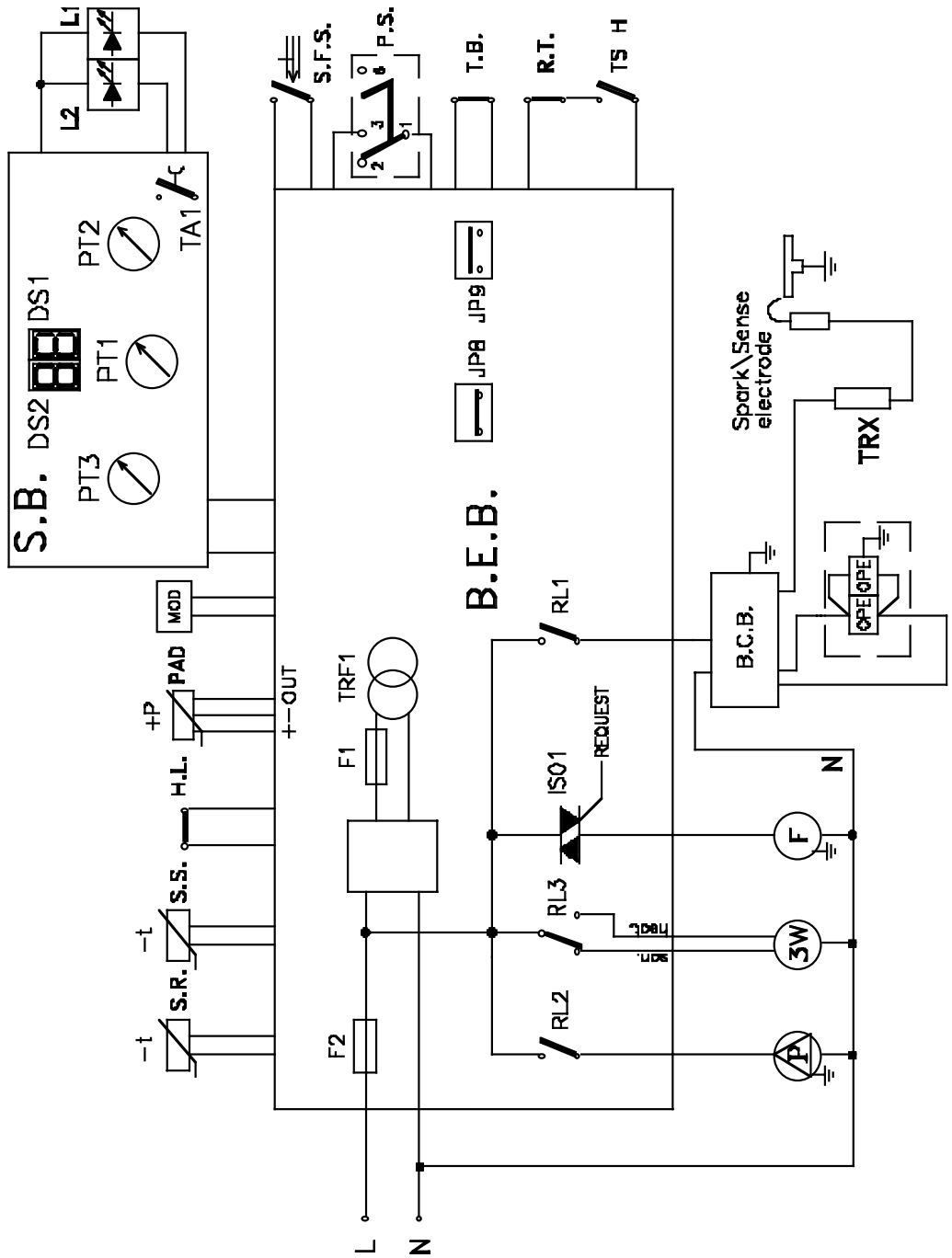

NOTE: L-N-E CONNECTION IS ADVISABLE

Key

F1	Fuse 100 mA F (on 240V circuit)	**JP8**	Natural gas or L.P.G. selector
F2	Fuse 2A F (on 230V circuit)	**JP9**	Timer on-off selector
R.T.	Room Thermostat	**JP7**	Room thermostat or remote control jumper
TSH	Heat Time Switch	**PT2**	C/H Temperature Control
S.F.S.	H/W Flow Switch	**PT3**	D/H/W Temperature Control
P.S.	Pressure Switch	**PT1 (S.B.)**	Selection of 0-reset / winter-summer
H.L.	Hight limit thermostat	**DS1-DS2**	Temperature/alarm display
S.R.	Heat Thermistor	**TA1**	Combustion analysis switch
S.S.	H/W Thermistor	**TRF1**	Transformer
MOD	Modulator Coil	**RL1**	Ignition Relay
F	Fan	**RL2**	Pump Relay
P	Pump	**RL3**	3 Way Relay
3W	Motorised Valve	**ISO1**	Fan triac
SP/SE E.	Spark/sense ectrode	**L1**	Led OK (green)
OPE	Solenoid Operators	**L2**	Led alarm (blink red)
B.C.B.	Burner Control Board	**TRF1**	Transformer
B.E.B.	Boiler control board	**PAD**	Differential Analogue Pressure Switch
S.B.	Secondary board		

Fig. 40

NOTE: L-N-E CONNECTION IS ADVISABLE
CONTROL SWITCHING OF TIME CLOCK AND ROOM THERMOSTAT IS 230 V.a.c.

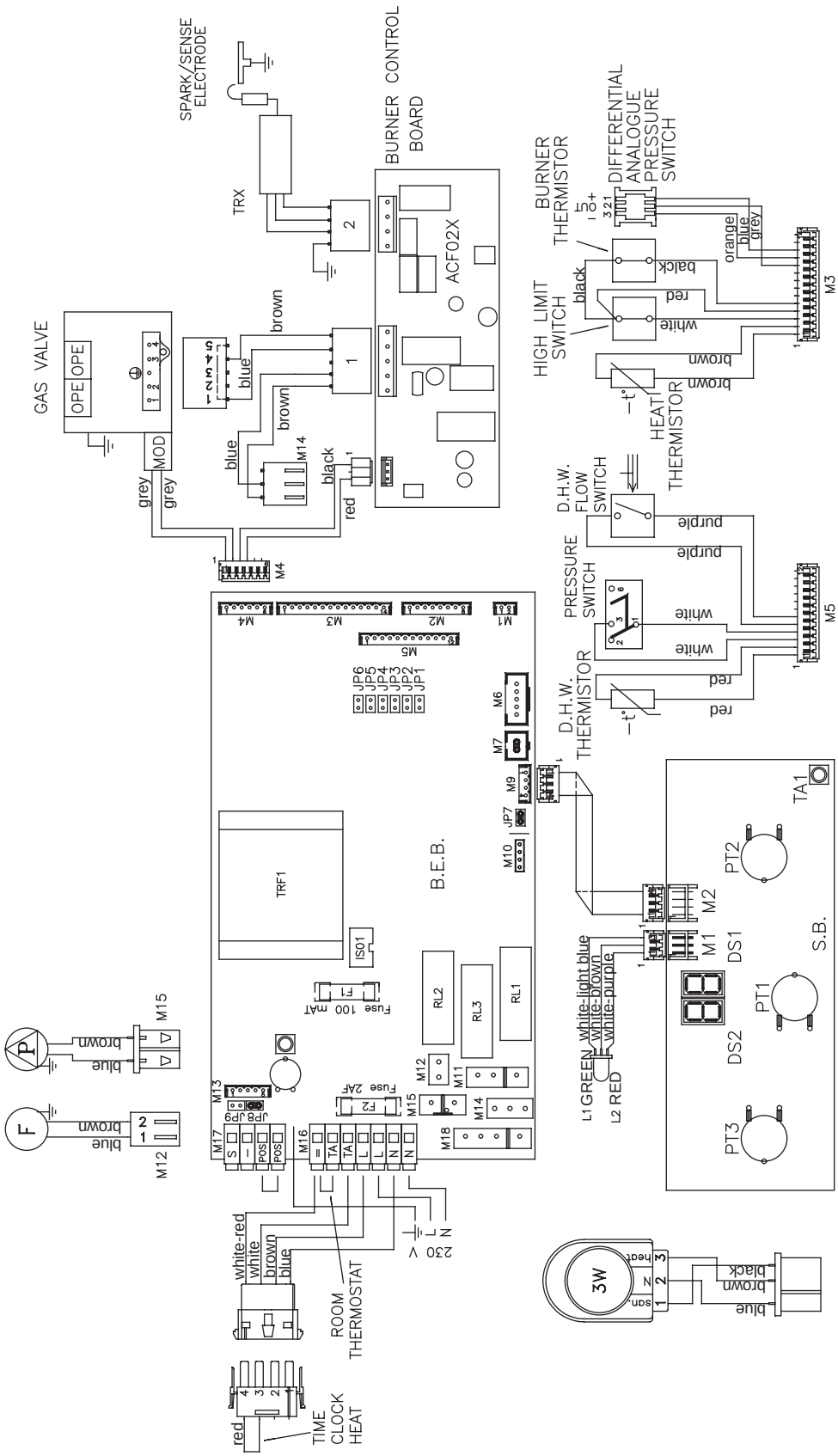

PRELIMINARY ELECTRICAL SYSTEM CHECKS

A. EARTH CONTINUITY CHECK - appliance must be electrically disconnected - meter set on Ω (ohms) x 1 scale and adjust zero if necessary.

a) Test leads from any appliance earth point to earth pin on plug - resistance should be less than 1 Ω (ohm).
If the resistance is greater than 1 Ω (ohm) check all earth wires for continuity and all contacts clean and tight.

B. SHORT CIRCUIT CHECK - appliance electrically disconnected, all switches ON (including stats) -
a) meter set on Ω (ohms) x 1 scale.
Test leads from L to N in appliance terminal strip/block - if meter reads 0 then there is a short circuit.

b) meter set on Ω (ohms) x 100 scale
Repeat test with leads from L to E. If meter reads less than ∝ (infinity) there is a fault.

NOTE - Should it be found that the fuse has failed but no fault is indicated, a detailed continuity check (i.e. by disconnecting and checking each component) is required to trace the faulty component. It is possible that a fault could occur as a result of local burning/arcing but no fault could be found under test.
However, a detailed visual inspection should reveal evidence of burning around the fault.

C. POLARITY CHECK
Appliance connected to mains supply and meter set on 300V ac scale. Test at appliance terminal strip:-

a) Test leads from L to N - meter reads approx 230V ac
b) Test leads from L to E (⏚) - meter reads approx 230 V ac
c) Test leads from N to E (⏚) - meter reads from O-15V ac*

Thus the terminal marked L is the live terminal. If the low* V ac reading is given on terminals other than N to E (⏚) there is an electrical fault.

Repeat the test at the appliance plug/inlet spur to check the wiring system up to the appliance and rectify any fault. If necessary repeat the test at the supply system socket/spur - if the fault also occurs at this stage then there is a house system fault which requires attention by the ELECTRICITY AUTHORITY. The customer should be warned not to use the appliance until this examination has been carried out.

D. RESISTANCE TO EARTH CHECK
Appliance must be disconnected from mains supply and meter set on Ω (ohms) x 100 scale. **All** switches, including stats, ON - Test leads from L to E - if meter reads other than infinity (∝) there is a fault which should be isolated. A detailed continuity check is required to trace the faulty component.

IMPORTANT - This series of checks are the first electrical checks to be carried out during a fault finding procedure. On completion of the service/fault finding task which has required the breaking and remaking of electrical connections then the checks - A. Earth Continuity. C. Polarity and D. Resistance to Earth - must be repeated.

11.1 Gas Rates (LPG)

	Plus AG
Min. Gas Rate	410
Max. Gas Rate	1430

11.2 Burner Details (LPG)

	Plus AG
Main Burner	POLIDORO NP16
Main Burner Injectors	16X0,77
Burner Pressure Max. Rate	36,0 mbar
Burner Pressure Min. C/H	3,70 mbar
Burner Pressure Min. DHW	3,70 mbar

11.3 RELATED DOCUMENTS

BS 6798		1987	Boilers of rated input not exceeding 60kW
BS 5449	Part 1	1990	Forced circulation hot water systems
BS 5546		1990	Installation of gas hot water supplies for domestic purposes.
BS 5440	Part 1	1990	Flues
BS 5482	Part 1	1994	Domestic Butane & Propane Gas burners in permanent dwellings

11.4 GAS SUPPLY

A gas supply should be connected to the boiler by a competent L.P.G. installer and should be of sufficient size to supply the boiler at its maximum output.

An existing supply should be checked by the installer or L.P.G. supplier to ensure that it can deal with the rate of gas supply required for all the appliances when they are in use at the same time.

11.5 GAS SUPPLY INSTALLATION

11.5.1 Inspect the entire installation including the meter, test for soundness and purge.

11.6 CHECK BURNER PRESSURE

11.6.1 The heat inputs for high and low gas rates are factory set to the maximum values given in section 11.2 but it is necessary to check/ adjust this when commissioning the appliance.

11.6.2 Turn off the main electrical supply. Gain access to the interior as instructed in 5.3.1 - 5.3.2.

11.6.3 Gain access to the electrical terminals as 5.7.2. Ensure the Jumper at point JP8 is removed.

11.6.4 Locate the main burner pressure test point (fig. 19) and slacken the screw half a turn in an anti clockwise direction. Attach a suitable pressure gauge as described at 6.6.5.

IMPORTANT: Before measuring gas pressures it is imperative that the protective cover over the gas valve adjustment screw is removed (fig. 36).
Turn on electricity supply. Turn mode selector switch to the position and fully open a domestic hot water tap to operate boiler in dhw mode. Adjust hot water control knob to it's maximum setting.

11.6.5 The pressure reading for maximum output should be :

Plus AG (LPG)
36.0 mbar
(Plus or minus 3.6 mbar)

If the pressure is wrong it should be adjusted as instructed in 8.23. (N.B. Whenever the maximum rate is adjusted, check and adjust the minimum rate too).

11.6.6 Reduce the domestic water flow rate to approximately 3-4 litres/min. Turn the domestic control knob slowly to minimum the boiler output will reduce to the minimum setting. If low flame cannot be established in this way, turn off the electricity supply, and disconnect a grey wire from the modulator coil. Switch on the electricity supply, the boiler will now light at the minimum setting.

11.6.7 When low flame is established the pressure reading should be :
Plus AG (LPG)
3.7 mbar
(Plus or minus 0.37 mbar)

If it is different adjustment should be made in accordance with the instructions in 8.23.

11.6.8 If a grey wire was disconnected from the modulator coil to check the minimum setting, turn off the electricity supply and reconnect the wire.

11.7 Maximum Rate in Central Heating Mode
The Linea range does not require any adjustment to the maximum heat requirement of the system load.

11.8 Setting the Minimum Rate for Central Heating
The Linea range does not require any adjustment to the minimum heat requirement of the system load.

11.9 Soft light ignition and range rating for central heating is fully automatic, no adjustment is necessary.

11.10 Turn mode selector to the OFF position, disconnect pressure gauge, re-tighten screw. Relight boiler.

11.11 Re- check for gas soundness.

11.12 Replace electrical controls panel.

11.13 Refix the boiler casing (fig. 24).

11.14 Hinge up controls facia and secure using the 2 screws (fig. 25).

Cod. 10023217 - 20/02 - Ed. 3

Vokèra

energizing home heating

Vokèra Ltd.
Catherine House, Boundary Way, Hemel Hempstead, Herts, HP2 7RP

Email: enquiries@vokera.co.uk Web: www.vokera.co.uk
General Enquiries - Tel: 01442 281400 Fax: 01442 281460
Technical Advice - Tel: 0870 333 0520
Spare Parts - Tel: 0141 945 6820
After Sales Service - Tel: 0870 333 0220

Vokèra Ireland
West Court, Callan, Co Kilkenny
Tel: 056 55057 Fax: 056 55060

Vokèra Ltd. reserve the right to change the specifications without prior notice. Consumers' statutory rights are not affected.

A Riello Group Company

benchmark™ COLLECTIVE MARK

"Vokèra"
supports Benchmark