Vokèra

Maxin

24e & 28e

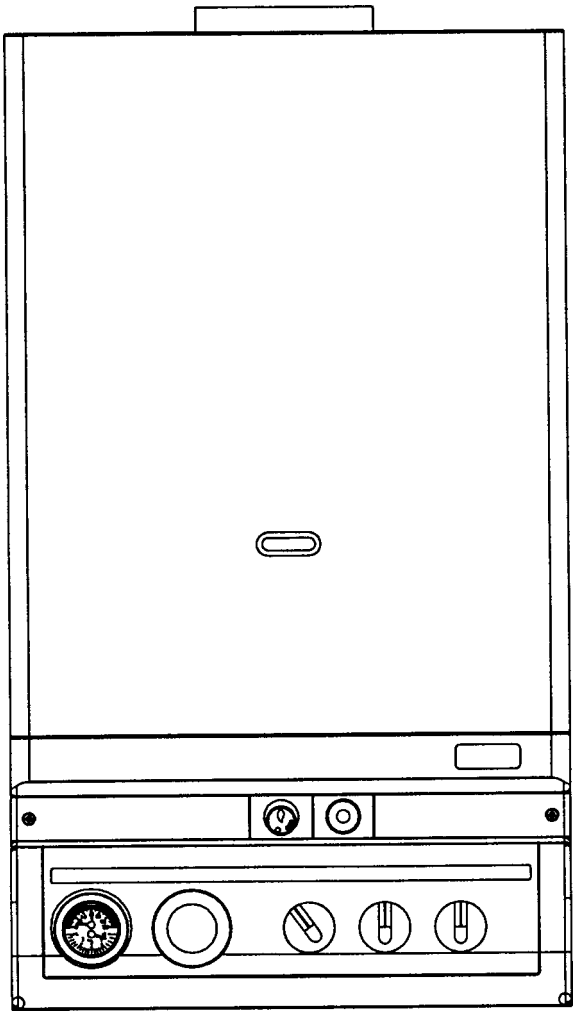

Installation & Servicing Instructions

CE

British Gas Service Listed
G.C. No. 47 094 22 (24e)
G.C. No. 47 094 23 (28e)

THESE INSTRUCTIONS TO BE RETAINED BY USER

spares & parts online
IBASIS.co.UK©

The Vokèra MAXIN 24e & 28e are combined central heating and domestic hot water appliances. By design they incorporate full sequence electronic ignition, circulating pump, expansion vessel, safety valve, temperature gauge, pressure gauge and 3 port diverter valve.

They are produced as a room sealed appliances suitable for wall mounting applications only. They are provided with a fan powered flue outlet with an annular co-axial combustion air intake which can be rotated through 360 degrees. A vertical & twin flue option is available, and they are also suitable for S.E. duct installation.

These appliances are designed for use with a sealed heating system only and are not intended for use on an open vented system.

The provision of stored domestic hot water is possible by the addition of an indirect cylinder with 'S' or 'Y' plan controls.

A range-rating facility is incorporated in the boiler for the central heating system in conjunction with the electronic burner modulation. The domestic hot water (dhw) service utilises a differential water pressure control combined with a 3 port diverter valve to give hot water priority.

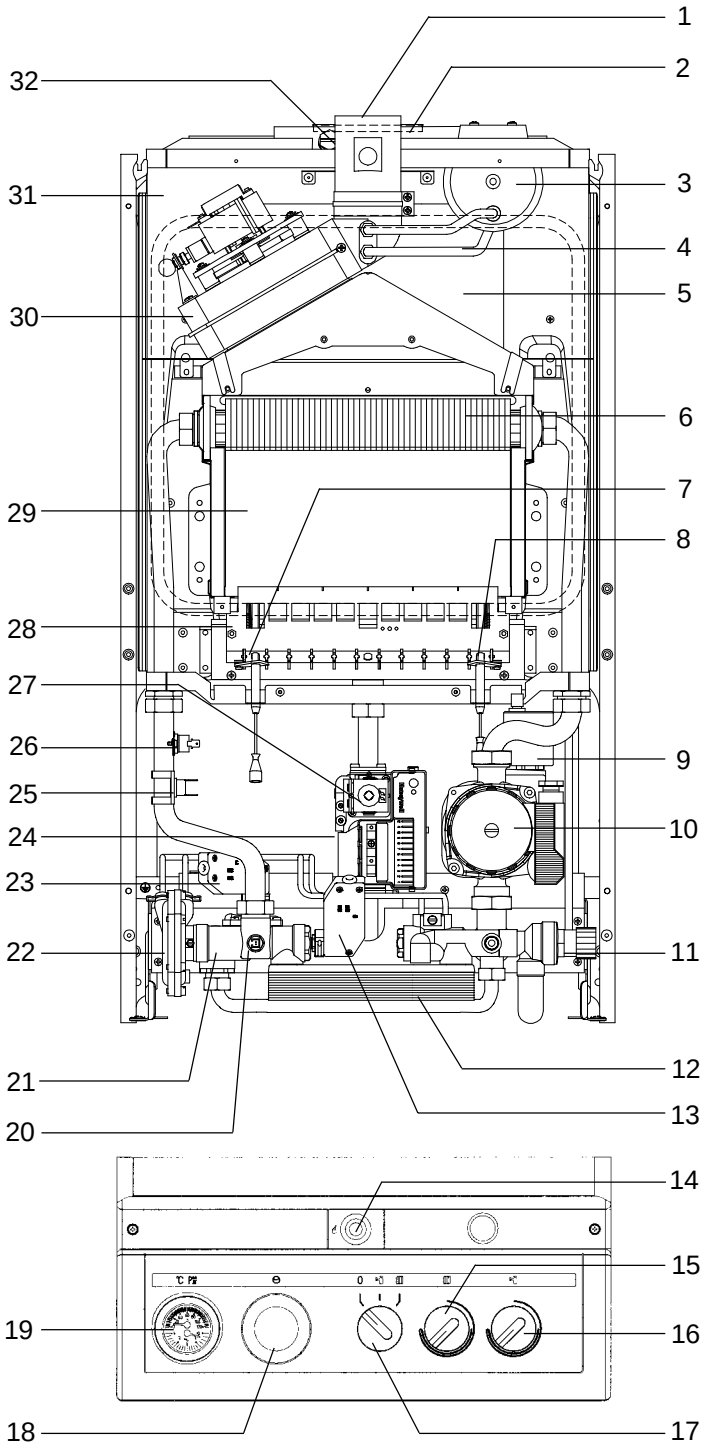

Fig.1 General Layout

1 Flue Outlet
2 Air Intake & Restrictor Ring
3 Pressure Differential Switch
4 Silicone Pressure Tubes
5 Expansion Vessel
6 Main Heat Exchanger
7 Flame Sensing Electrode
8 Spark Electrode
9 Automatic Air Release Valve
10 Pump
11 Safety Valve
12 Domestic Heat Exchanger
13 Domestic Microswitch
14 Ignition Reset Button
15 Central Heating Temperature Control
16 Hot Water Temperature Control
17 Mode Selector Switch
18 Timeclock Aperture (optional)
19 Temperature/Pressure Gauge
20 Temperature Sensor (thermistor)
21 Diverter Valve
22 Domestic Distribution Manifold
23 Flow Switch (boiler)
24 Gas Valve & Ignition Control
25 Fan Overrun Thermostat
26 Safety Thermostat
27 Modulator Coil
28 Main Burner
29 Combustion Chamber
30 Fan Assembly
31 Air Chamber (with front removed)
32 Flue Gas Analysis Test Point

2.1 Fig.1 illustrates the general layout of components. Fig.2 illustrates the operating principles described below.

2.2 Central Heating Mode

2.2.1 When the various switches and controls impose a demand for heat, the pump is started. The flow of water from the pump operates a flow switch. This in turn energises the electronic circuitry. The fan is started, the gas valve is energised at an intermediate rate and the electronic ignition goes through an ignition attempt.

2.2.2 The burner ignition is checked by the electronic circuitry to ensure correct ignition of the burner, once successful the electronic control will allow the full rate of gas to flow through the gas valve.

2.2.3 As water temperature increases this is sensed by the temperature sensor on the hydraulic section which modulates the burner to the minimum set pressure.

2.2.4 Depending on the load, either the water temperature will continue to rise, where upon the burner is switched off, or the water temperature will fall and the burner will return to the maximum set pressure.

2.3 Domestic Hot Water Mode

2.3.1 The appliance will operate in domestic hot water mode whenever the mode selector switch is on regardless of mode selector switch position and any demand for central heating.

2.3.2 Opening a draw off tap will operate the dhw differential pressure device which in turn operates the 3-port valve (21) and the dhw flow switch.

The three port valve diverts boiler water to the dhw heat exchanger.

2.3.3 The dhw flow switch transfers control of the burner to the dhw temperature control potentiometer (15) which modulates the burner output between high and low flame to maintain an average heat input to suit the dhw output required.

2.3.4 A fan overrun is incorporated in the boiler in both c/h & dhw modes. The fan overruns until the boiler water cools to approximately 80°C (176°F).

2.4 Safety Devices

2.4.1 In both central heating and hot water modes safe operating is ensured by

A. Differential pressure units in both primary and dhw circuits which prevent burner operation if water flow rates are too low.

B. A safety thermostat, which interrupts the control circuit shutting off the gas valve. At the same time the fan will still operate.

C. A Pressure differential switch in the flue system to check the fans operation before allowing ignition.

2.4.2 A safety valve is provided to relieve excess pressure from the primary circuit.

Fig. 2

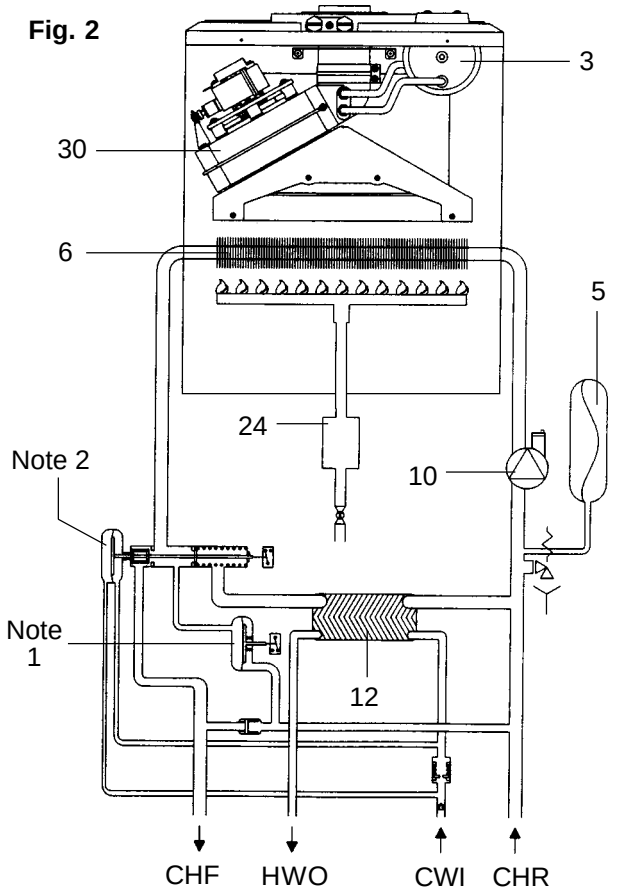

KEY:

CHF Central Heating Flow.
HWO Domestic Hot water outlet.
CWI Cold Water Inlet.
CHR Central Heating Return.

Notes

1. Differential pressure unit. Senses water flow rate through the pump & main heat exchanger and operates the flow switch.(23)

2. Differential pressure unit. Senses domestic hot water flow which operates the 3 port valve and domestic microswitch. (13).

3.1 **Units** Dimensions and values are given in the preferred SI Units with Imperial units in brackets where applicable.

3.2 **Dimensions and Contents**

Height 820mm (32.2in) appliance only.
980mm (38.7in) inc.horizontal flue.
Width: 450mm (17.7in)
Depth: 322mm (12.6in)
Weight empty 49kg (108lb)
full 52kg (114lb)
Water content: 3 litres (.66 gals)
for further dimensions see figs 12 - 16

3.3 **Connection sizes**
Heating flow and return: Threaded tail for 22mm bent tap connector (supplied).
Cold water inlet: Nut and olive for 15mm o.d.
Hot water outlet: Nut and tail for 15mm compression or capillary.
Gas Service: Rc ½ (½in BSP int)
Safety valve outlet: 15mm compression or capillary.

Flue outlet/Air inlet: nom dia 60/100mm specially supplied with boiler (concentric).
Flue outlet/Air inlet: nom dia 80/80mm specially supplied with boiler (twin).

3.4 **Installation Requirements**

3.4.1 **Clearances (Horizontal or Vertical Flue)**
Minimum - above casing 225mm (9in)
Minimum - below casing 200mm (8in)
Minimum - In front 600mm (24in)
Minimum - At sides 12mm (½in) from casing)

3.4.2 Maximum heating system contents approx. 76.4 litres (16.8 gals) Acceptance capacity of expansion vessel 8 litres (1.8 gals).

3.4.3 Means of filling sealed system: To accord with BS and/or local Water Authority requirements.

3.4.4 The standard concentric horizontal flue allows a maximum length of duct as follows:
Rear flue: 731mm (wall thickness)
Side flue: 890mm (to centre line of boiler).

Using extension tubes the flue may be extended to the following lengths.
Concentric
24e: 4.5 metres max. (horizontal)
28e: 3.4 metres max. (horizontal)
24e 5.25 metres max. (vertical)
28e 4.4 metres max. (vertical)

Twin
24e & 28e 14/14 metres max. (horizontal)
24e & 28e 14/14 metres max. (vertical)
plus the horizontal or vertical concentric terminal.

The reduction in flue length for each bend used is listed opposite.

CONCENTRIC FLUE:

BEND	REDUCTION IN FLUE LENGTH FOR EACH BEND
90°	1000 mm
45°	500 mm

TWIN FLUE:

BEND	REDUCTION IN FLUE LENGTH FOR EACH BEND
90°	1000 mm
45°	1000 mm

3.5 **Electrical Details**
Mains supply 230v ~ 50Hz Fused 3A
Internal fuse rating F2A
Power consumption: 125w.

3.6 **Performance and Limitations 24e**
Max. input 26.3 kW (89,735 Btu/h)(net)
Min. input 11.2 kW (38,225 Btu/h)(net)(c/h)
Min. input 9.8 kW (33,447 Btu/h)(net)(h/w)
Max. input 29.2 kW (99,658 Btu/h)(gross)
Min. input 12.4 kW (42,320 Btu/h)(gross)(c/h)
Min. input 10.8 kW (36,860 Btu/h)(gross)(h/w)

Max. output 23.7 kW (80,864 Btu/h)
Min. output 9.3 kW (31,740 Btu/h)(c/h)
Min. output 8.1 kW (27,645 Btu/h)(h/w)

Central Heating output range
Max. 23.7 kW (80,864 Btu/h)
Min. 9.3 kW (31,740 Btu/h)

3.7 **Performance and Limitations 28e**
Max. input 31.0 kW (105,802 Btu/h)(net)
Min. input 11.9 kW (40,614 Btu/h)(net)(c/h)
Min. input 10.5 kW (35,836 Btu/h)(net)(h/w)
Max. input 34.4 kW (117,406 Btu/h)(gross)
Min. input 13.2 kW (45,051 Btu/h)(gross)(c/h)
Min. input 11.6 kW (39,590 Btu/h)(gross)(h/w)

Max. output 28.0 kW (95,563 Btu/h)
Min. output 9.9 kW (33,788 Btu/h)(c/h)
Min. output 8.7 kW (29,692 Btu/h)(h/w)

Central Heating output range
Max. 28.0 kW (95,563 Btu/h)
Min. 9.9 kW (33,788 Btu/h)

3.8 Designed temp rise 20°C
Max. flow temperature 85°C

Fig.22 shows the relation between burner pressure and input/output (N/G).

NOTE: Use gross input values when gas rating the appliance (N/G).

3.8.1 L.P.G. instructions are to be found on pages 57 & 58.

3.9 Nominal hot water production

TEMPERATURE RISE °C	FLOW RATE LITRES/MIN.	
	24e	28e
35	9.7	11.5
30	11.3	13.4

3.10 Central Heating Pump Duty

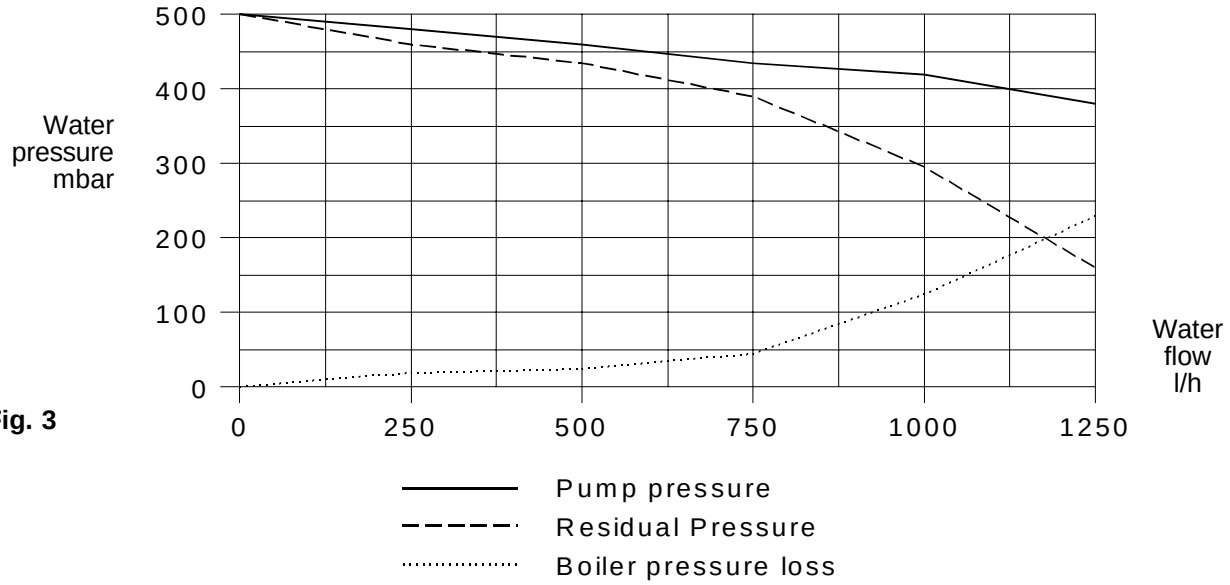

Fig. 3

Working Pressures	**Heating System**	**Hot Water System**
Maximum	1.5bar/15m.wg/50ft wg	6.0bar/90psig
Minimum	0.5bar/5m.wg/16ft wg	0.6bar/7psig
Safety valve setting	3bar/30m/102ft	

Flow Rates
Min. water flow (dhw) 2.8 litres/min (0.6 gal/min)
Min. central heating flow rate through appliance 350 litres/h (1.28 gal/min).

3.11 Gas Rates (N/G)

	24e	28e
Min. Gas Rate	1.02 m3/h 36.37 ft3/h	1.10 m3/h 39.0 ft3/h
Max. Gas Rate	2.78 m3/h 98.3 ft3/h	3.27 m3/h 115.8 ft3/h

3.12 Burner Details (N/G)

	24e	28e
Main Burner	Polidoro NP12	Polidoro NP14
Main Burner Injectors	12 x 1.35	14 x 1.35
Burner Pressure Max.	10.1 mbar	10.1 mbar
Burner Pressure Min. C/H	1.9 mbar	1.6 mbar
Burner Pressure Min. DHW	1.5 mbar	1.3 mbar

Gas Control Valve: Basic Honeywell VK4105A 1027 1 220/240v CVI (Combined Valve and Ignition) This unit is modified. The modification comprises a coil carried by the main burner regulation screw. For full flame a voltage of approx. 12.5v dc is applied to the coil. For central heating max. rate the max. voltage to the coil is restricted by an on site adjustment of a potentiometer.

4.0 General Requirements

This appliance must be installed by a competent person in accordance with the Gas Safety (Installation & Use) Regulations 1998.

4.1 Related Documents

The installation of this boiler must be in accordance with the relevant requirements of the Gas Safety (Installation & Use) Regulations 1998 the Local Building Regulations, the current I.E.E. Wiring Regulations, the by-laws of the local water undertaking, and in Scotland, in accordance with the Building Standards (Scotland) Regulation. In Ireland the local building regulations (IE).

It should be in accordance also with any relevant requirements of the local authority and the relevant recommendations of the following British Standard Codes of Practice:

BS 6891		1988	Low pressure installation pipes
BS 6798		1987	Boilers of rated input not exceeding 60kW.
BS 5449	Part 1	1990	Forced circulation hot water systems
BS 5546		1990	Installation of gas hot water supplies for domestic purposes (2nd family gases).
BS 5440	Part 1	1990	Flues.
BS 5440	Part 2	1989	Flues & Ventilation.
BS 7074	Part 1	1989	Application, selection & installation of expansion vessels & ancillary equipment for sealed water systems.

4.2 Location of Appliance

The combination boiler may be installed in any room or internal space, although particular attention is drawn to the requirements of the current I.E.E. Wiring Regulations, and in Scotland, the electrical provisions of the Building Regulations, with respect to the installation of the combination boiler in a room or internal space containing a bath or shower.

Where a room-sealed appliance is installed in a room containing a bath or shower, any electrical switch or appliance control, utilising mains electricity, should be located in such a position that it cannot be touched by a person using the bath or shower.

The location chosen for the boiler must permit the provision of a satisfactory flue and termination. The location must also permit an adequate air supply for combustion purposes and an adequate space for servicing and air circulation around the boiler.

Where the installation of the boiler will be in an unusual location special procedures may be necessary and BS 6798:1987 gives detailed guidance on this aspect.

A compartment used to enclose the boiler must be designed and constructed specifically for this purpose. An existing cupboard or compartment may be used provided that it is modified for this purpose.

Details of essential features of cupboard/compartment design including airing cupboard installations are given in BS 6798:1987. This appliance is not suitable for external installation.

4.3 Gas Supply

A gas meter is connected to the service pipe by the local gas supplier.

An existing meter should be checked, preferably by the gas supplier to ensure that the meter is adequate to deal with the rate of gas supply required for all appliances it serves.

Installation pipes should be fitted in accordance with BS 6891:1988.

Pipework from the meter to the boiler must be of adequate size. Pipes of a smaller size than the boiler inlet connection should not be used.

The complete installation must be tested for soundness as described in the above code.

N.B. If the gas supply for the boiler serves other appliances ensure that an adequate supply is available both to the boiler and the other appliance when they are in use at the same time.

4.4 Flue System

The terminal should be located where dispersal of combustion products is not impeded and with due regard for the damage or discoloration that might occur to building products in the vicinity (see fig 4).

The terminal must not be located in a place where it is likely to cause a nuisance.

In cold and/or humid weather water vapour may condense on leaving the flue terminal. The effect of such ‘steaming’ must be considered.

For protection of combustibles, refer to BS 5440:1 where the terminal is less than 2m (6.6ft) above a pavement or platform to which people have access (including any balcony or flat roof the terminal must be protected by a guard of durable material).

A suitable guard is available from Vokèra Ltd. Part No 018, G.C. No. 301 106

This guard must be fitted centrally over the terminal. Mark the positions of the fixings, drill the wall and secure using wall plugs and 3 of 1½" No.8 plated screws.

Fig. 4

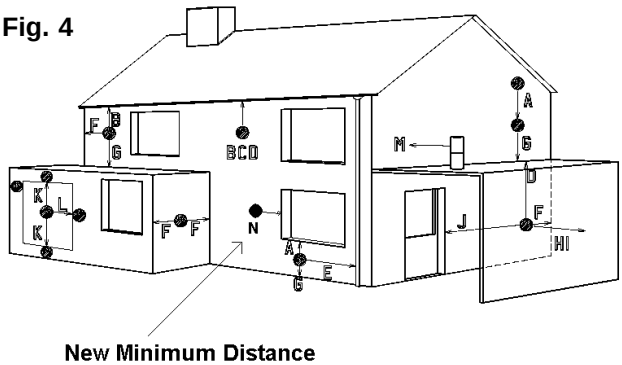

Terminal position for fan assisted boiler

(minimum distance)			mm
A	-	Directly below an open window or other opening (e.g. air brick)	300
B	-	Below gutters, soil pipes or drain pipes	25
C	-	Below eaves	25
D	-	Below balconies or car port roof	25
E	-	From vertical drain pipes and soil pipes	75
F	-	From internal or external corners	25
G	-	Above ground or below balcony level	300
H	-	From a surface facing a terminal	600
I	-	From a terminal facing a terminal	1200
J	-	From an opening in the car port (e.g. door window) into dwelling.	1200
K	-	Vertically from a terminal on the same wall	1500
L	-	Horizontally from a terminal on the same wall	300
M	-	Horizontally from a vertical terminal to a wall	300
N –		Horizontally from an opening, airbrick, openable window, etc.	300

NOTE: The flue must be terminated in a place not likely to cause a nuisance.

4.5 Air Supply

The following notes are intended for general guidance.

The room sealed fan flued boiler does not require a permanent air vent for combustion air supply.

Where installed in a cupboard or compartment ventilation is not required.

4.6 Water Circulation (Central Heating)

Detailed recommendations are given in BS 6798:1987 and BS 5449:1:1990 (for smallbore and microbore central heating systems).

4.6.1 The following notes are given for general guidance.

4.6.2 Pipework

Copper tubing to BS 2871:1:1971 is recommended for water pipe. Jointing should be either by capillary soldered or with compression fittings.

Where possible, pipes should have a gradient to ensure air is carried naturally to air release points and water flows naturally to drain taps.

It should be ensured as far as possible that the appliance heat exchanger is not a natural collecting point for air.

Except where providing useful heat, pipes should be insulated to prevent heat loss and to avoid freezing. Particular attention should be paid to pipes passing through ventilated spaces in roofs and under floors.

4.6.3 By-Pass

An automatic by-pass is incorporated in the boiler and systems should be designed to ensure that with only one radiator turned on a flow rate of at least 350 litres/hour (1.28 gals/min) is achieved through the boiler see 6.9.4

4.6.4 System Design

Figs 5 & 5a illustrates typical system layouts showing options of either, pipe connection from below as fig. 5, or pipe connection from above utilising the purpose made duct in the rear frame of the appliance.

4.6.5 Draining Taps

These must be located in accessible positions to permit the draining of the whole system. The taps must be at least 15mm nominal size and manufactured in accordance with BS 2879:1980.

Fig. 5

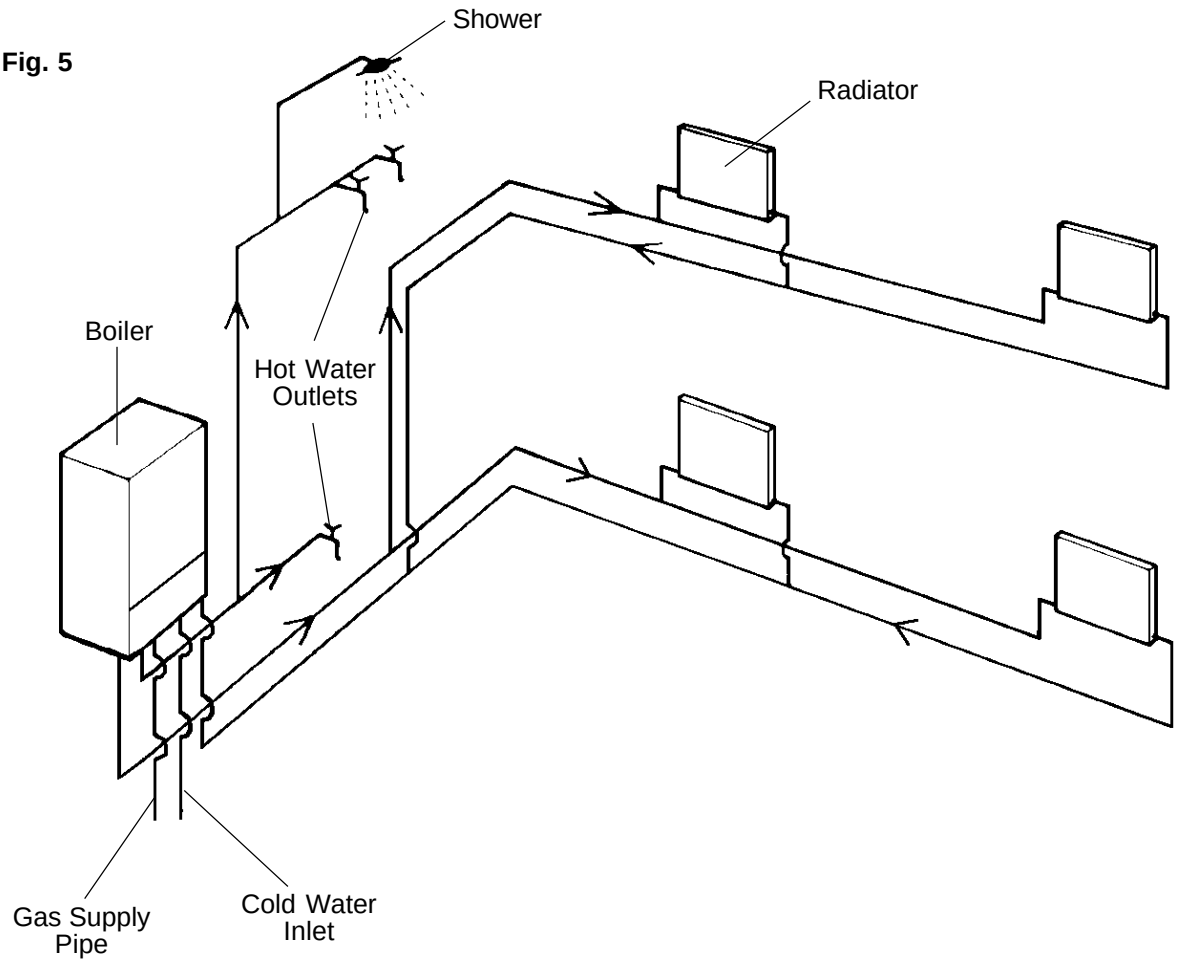

Fig. 5a

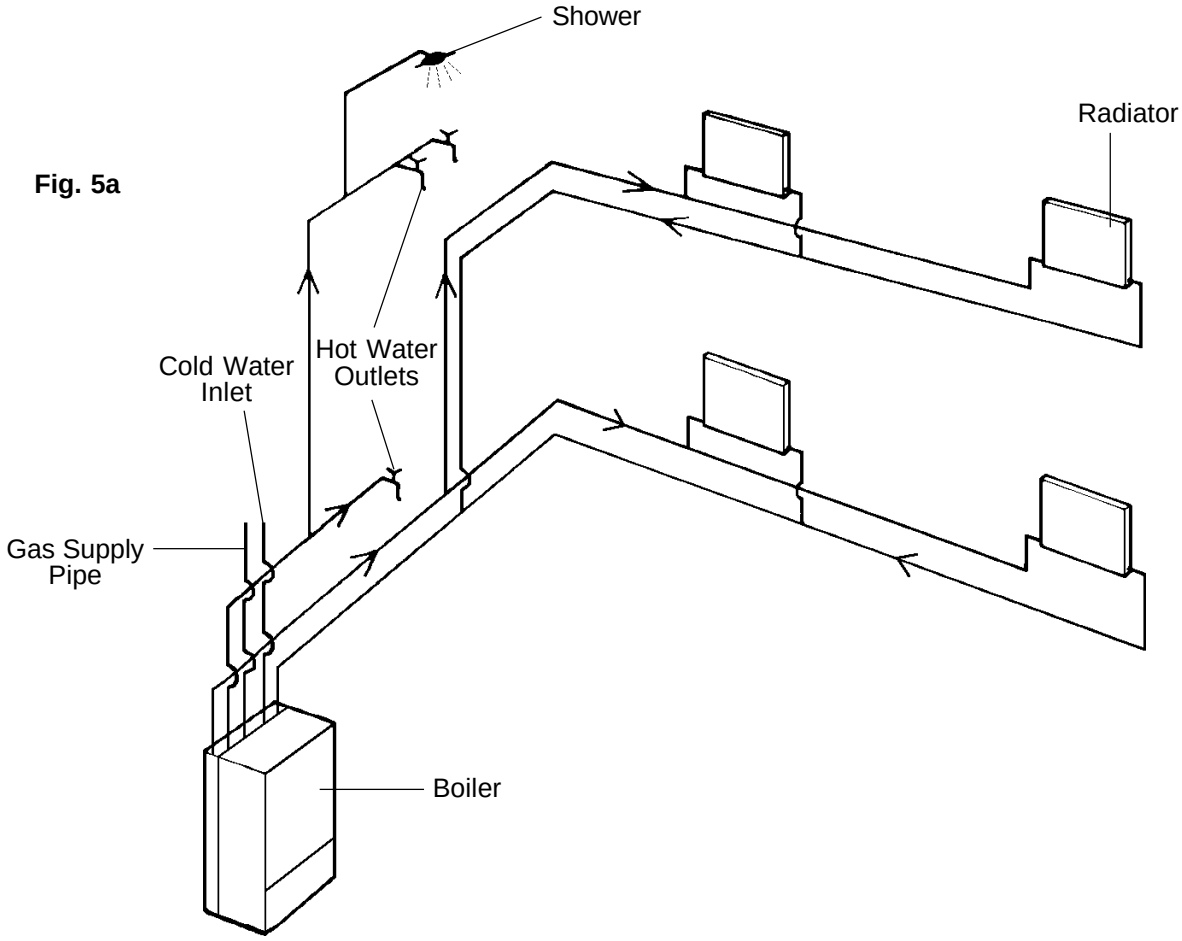

N.B. Vokèra Ltd recommend a 2-pipe system. Single pipe systems are more liable to be troublesome unless carefullly designed and installed.

4.6.6 Air Release Points

These must be fitted at all high points where air will naturally collect, and must be sited to facilitate complete filling of the system.

4.6.7 The appliance has an integral sealed expansion vessel to accommodate the increase of water volume when the system is heated. It can accept up to 8 litres (1.8gals) of expansion water. If the appliance is connected to a system with an unusually high water content. Calculate the total expansion and add additional sealed expansion capacity as appropriate.

In general, modern systems will present no problem.

4.6.8 Filling Point

A method for initially filling the system and replacing water lost during servicing must be provided, and it must comply with local water authority regulations.

A method is shown in fig. 6 using the Vokèra filling loop which is acceptable in most areas. In the event that this method is not suitable in a particular area, contact the local authority for preferred methods.

An alternative method would be from an independent make up vessel or tank mounted in a position 1m higher than the highest point of the system & with a minimum static head (from the top of the boiler to the water level of the feed tank) of 5m. The cold feed pipe must have an approved non return valve and stopcock so the tank can be isolated from the system after filling. The feed pipe should be connected to the central heating return pipe as close to the boiler as possible.

Fig. 6

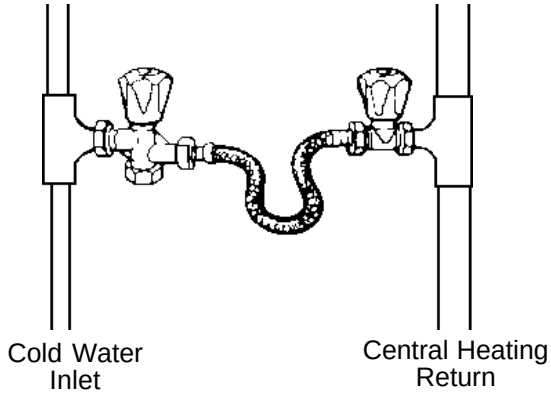

4.7 Electrical Supply

The appliance is supplied for operation on 230V ~ 50Hz electricity supply. It should be protected with a 3-amp fuse.

THIS APPLIANCE MUST BE EARTHED.

The method of connection to the mains electricity must allow complete isolation from the supply.

The preferred method is by using a fused double pole switch with a contact separation of at least 3mm.

The switch must supply ONLY the appliance and immediate electrical control circuits (e.g. programmer/room thermostat)

Alternatively, use an unswitched shuttered socket outlet with a fused 3-pin plug both complying with BS 1363.

4.8 Showers

If a shower control is to be supplied from the combination unit it should be of the type which incorporates a thermostatic control and by design is suitable for use with a combination boiler. Check application with shower manufacturer.

Fig. 6a

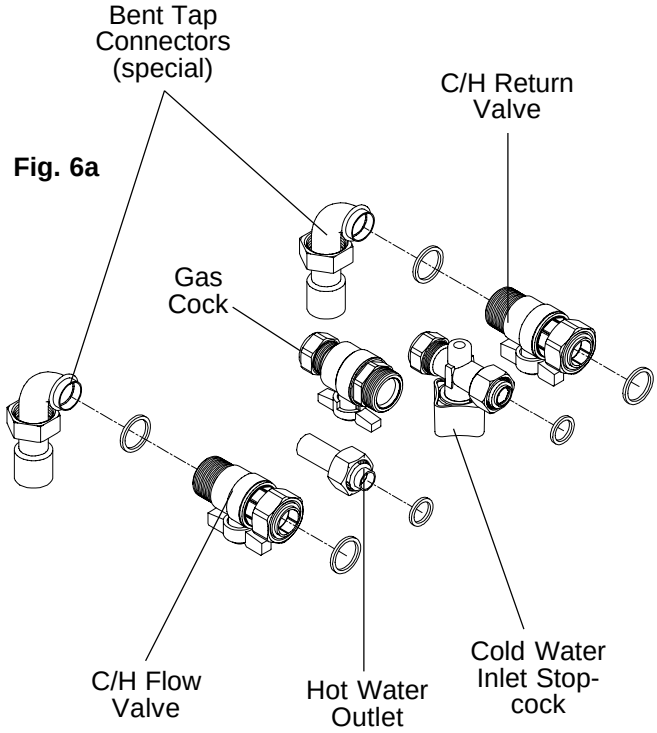

5.1 Delivery (fig. 7)

The appliance is delivered in a heavy duty cardboard carton.

Lay the carton on the floor with the writing the correct way up.

Fig. 7

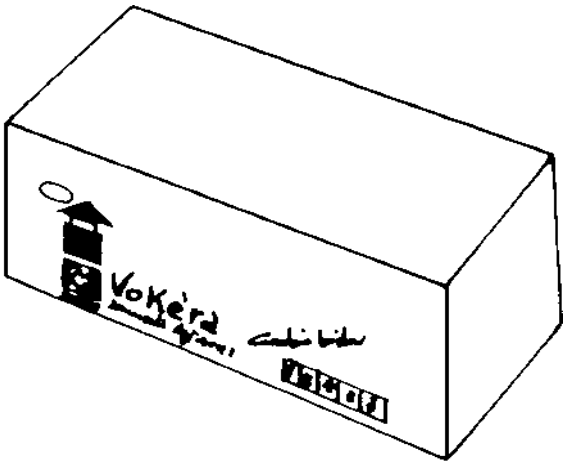

5.2 Unpacking (fig. 8)

Pull both sides of the carton open. Do not use a knife. Unfold the rest of the carton from around the appliance.

Lay the appliance with the black frame on the floor. Remove the two polystyrene blocks one at the top and the other at the base of the appliance.

Remove the hanging bracket from the top polystyrene block and the box containing the fixing kit from the lower polystyrene block.

The fixing kit contains

1 - Hanging bracket
1 - Fittings pack containing:
Central heating valves & tap connectors (2)
Gas service tap (1)
Cold water stopcock (1)
Hot water outlet (1 nut & tail)
Various washers
Flue Kit supplied in separate carton.

Fig. 8

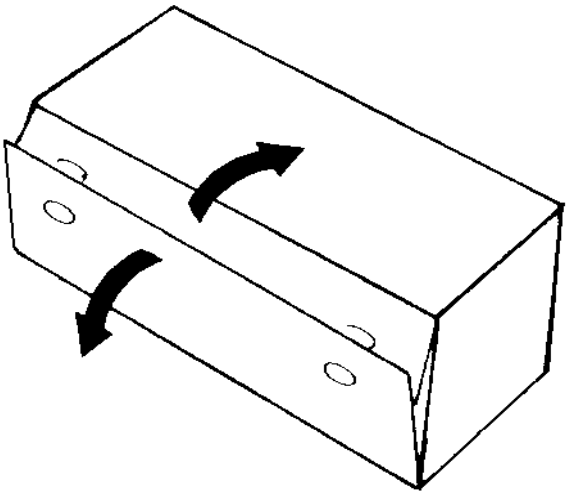

5.3 Preparing for Mounting

5.3.1 Remove the 2 screws securing the front control panel and remove the 2 screws securing the lower part of the casing to the case frame.

5.3.2 Slightly lift the casing and slide it gently towards the top of the appliance to disengage the case from the top suspension hooks. (Fig. 9)

5.3.3 Ensure the casing and screws are put to one side in a safe place.

5.3.4 Loosely fit (hand tight) the valves and fittings using the washers supplied (Figs. 6a & 10).

Fig. 9

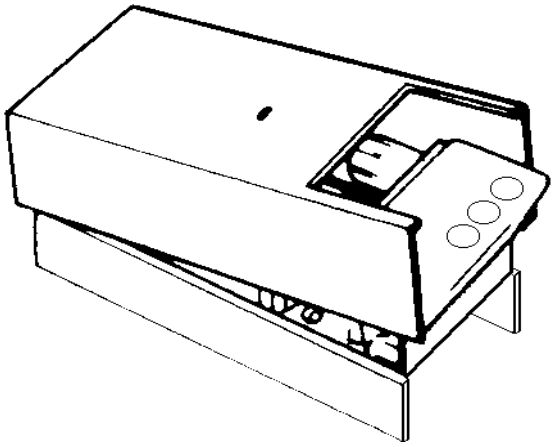

Fig. 10

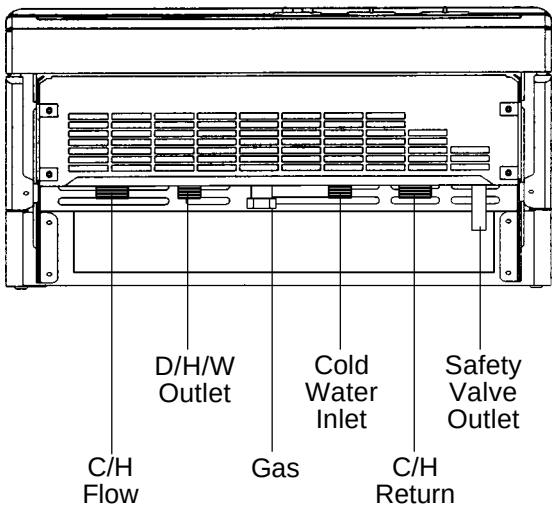

5.4 Preparation for mounting the appliance

The appliance should be mounted on a smooth, vertical surface, which must be capable of supporting the full weight of the appliance. Care should be exercised when determining the position of the appliance with respect to hidden obstructions such as pipes, cables, etc.

When the position of the appliance has been decided – using the template supplied – carefully mark the position of the fixing jig/mounting bracket assembly (see fig. 11) and flue-hole (if applicable).

5.4.1 Important

There are two holes on the template. The lower hole should be used with the telescopic flue kit (part no. 0225705 & 0225710). The upper hole is for use with all other horizontal flue kits.

Fig. 11

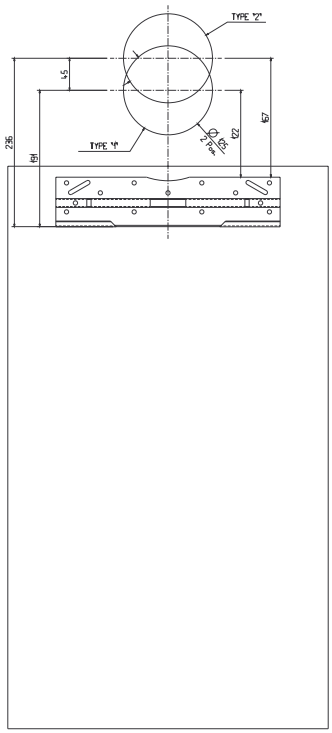

type 1 = centre of rear flue hole using only 0225705 or 0225710 flue

type 2 = centre of rear flue hole for all other flues

5.4.2 Maximum flue lengths

Flue system	Maxin 24e	Maxin 28e
Concentric Horizontal	3.4m	4.5m
Concentric Vertical	4.4m	5.25m
Twin flue	14m/14m + terminal	14m/14m + terminal

5.5 Fitting the flue

The top flue outlet permits both horizontal and vertical flue applications to be considered, alternatively, the Vokera twin flue system can be utilised if longer flue runs are required.

5.5.1 Concentric horizontal flue

(For concentric vertical flue, see 5.5.2)
(For twin flue applications, see 5.5.3)
The appliance flue outlet elbow can be rotated through 360º on its vertical axis. In addition the flue may be extended from the outlet elbow in the horizontal plane (see 5.4.2), however if the flue is to be extended or additional bends are to be fitted, the standard horizontal flue kit (part no. 2359029) **must** be used. A reduction must also be made to the maximum length (see table) when additional bends are used.

Reduction for bends

Bend	Reduction in maximum flue length for each bend
45º bend	0.5 metre
90º bend	1.0 metre

Horizontal flue terminals and accessories

Part No.	Description	Min-Max Length
0225705	Standard telescopic flue	380mm – 600mm (Dimension 'X')
0225710	Extended telescopic flue	600mm – 920mm (Dimension 'X')
2359029	Horizontal flue kit For use with add. Bends & extensions	833mm (Dimension 'X')
2359069	750mm extension	750mm
2359079	1500mm extension	1500mm
2359049	45º bend (pair)	N/A
2359059	90º bend	N/A
0225760	Wall bracket (5)	N/A

Using the template provided (see 5.4.1), mark and drill a 125mm hole for the passage of the flue pipe. The hole should have a 1º drop from the boiler to outside, to eliminate the possibility of rainwater entering the appliance via the flue.

The fixing holes for the wall-mounting bracket & jig should now be drilled and plugged, an appropriate type and quantity of fixing should be used to ensure that the bracket is mounted securely.
Once the bracket & jig has been secured to the wall, mount the appliance onto the bracket.

FITTING THE TELESCOPIC FLUE KIT (0225705 & 0225710)

Carefully measure the distance from the centre of the appliance flue outlet to the face of the outside wall (dimension 'X' see fig. 12). Add 50mm to dimension 'X' to give the overall flue length (dimension 'Y'). Using the complete telescopic flue assembly adjust the length to suit dimension 'Y'. Once the telescopic flue terminal has been adjusted to the correct length, secure the flue assembly with the screw supplied.

NOTE

The flue restrictor ring (see fig. 1) must be removed or discarded prior to attaching the flue bend to the appliance.

Insert the flue assembly into the previously drilled flue hole and locate the flue bend over the appliance flue outlet. Push the flue bend down over the appliance flue outlet and ensure the correct seal is made. Pull the flue assembly towards and over the flue bend – using a twisting action – ensuring the correct seal is made. Check that the terminal protrudes past the finished outside wall by the correct length (115mm).

NOTE
You must ensure that the entire flue system is properly supported and connected.

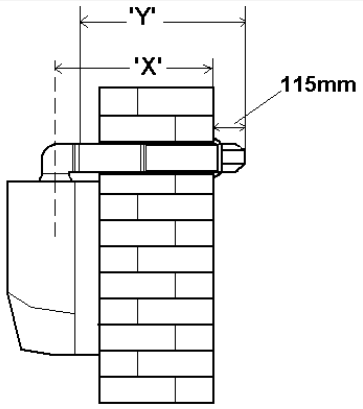

'X' + 50mm = 'Y' **Fig. 12**

Seal the flue assembly to the wall using cement or a suitable alternative that will provide satisfactory weatherproofing. The interior and exterior trim can now be fitted

FITTING THE STANDARD (2359029) HORIZONTAL FLUE KIT (see 5.4.1)

Carefully measure the distance from the centre of the appliance flue outlet to the face of the outside wall (dimension 'X' see fig. 13). Ensure the inner (60mm) pipe is fully inserted into the outer (100mm) pipe (when the inner pipe is fully inserted, it stands proud of the outer pipe by 7.5mm). Add 32mm to dimension 'X' to give the overall flue length (dimension 'Y'). The standard horizontal flue kit (part no. 2359029) is suitable for a distance (dimension 'Y') of up to 865mm.

NOTE
Dimension 'Y' is measured from the end of the terminal to the end of the outer (100mm) pipe. The internal trim should be fitted to the flue pipe before connection of the 90º bend.

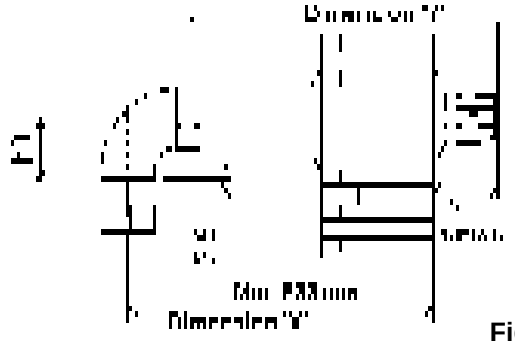

Fig. 13

If the horizontal flue kit (2359029) requires to be cut to the correct size (dimension 'Y'), you must ensure that the inner (60mm) pipe stands proud of the outer (100mm) pipe by 7.5mm (see fig. 13A). Ensure any burrs are filed or removed and that any seals are located properly before assembly.

Connect the inner (60mm) pipe of the terminal assembly to the push-fit end of the 90º bend (supplied) using a twisting action. Insert the assembled flue into the previously drilled hole. Using the clips & screws supplied, connect the flue assembly to the boiler, ensuring that the terminal protrudes past the finished outside wall by the correct length (135mm).

You must ensure that the entire flue system is properly supported and connected.

Seal the flue assembly to the wall using cement or a suitable alternative that will_provide satisfactory weatherproofing. The exterior trim can now be fitted.

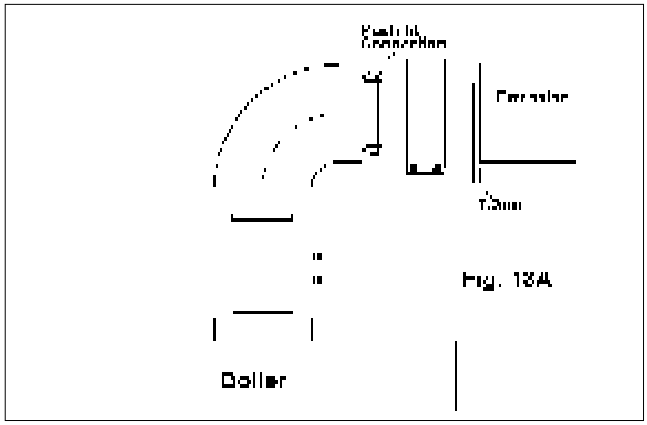

Fig. 13A

EXTENDING THE HORIZONTAL FLUE
If the horizontal flue requires extension/s or additional bend/s, the horizontal flue terminal kit (2359029) must be used. Connect the bend – supplied with the terminal kit – to the top of the boiler using the clips, screws, & gaskets supplied. The additional bends & extensions have an internal push-fit connection, care should be taken to ensure that the correct seal is made when assembling the flue system. Connect the required number of flue extensions or bends (up to the maximum equivalent flue length) to the flue terminal using the clips, screws, & gaskets supplied (see fig. 13 & 13A).

IMPORTANT
The flue restrictor ring (see fig. 1) must be removed or discarded if the total flue length – including bends – exceeds 1.0m.

NOTE
When cutting the horizontal flue terminal or an extension to the required length, you must ensure that the excess is cut from the plain end of the terminal or extension, and that the inner (60mm) pipe is 7.5mm longer than outer (100mm) pipe (see fig. 13 & 13A). Remove any burrs, and check that any seals are located properly.

You must ensure that the entire flue system is properly supported and connected.

Seal the flue assembly to the wall using cement or a suitable alternative that will provide satisfactory weatherproofing. The interior and exterior trim can now be fitted.

5.5.2 Concentric vertical flue

The vertical flue terminal can be connected directly to the appliance flue outlet. Alternatively, an extension or bend can be connected to the appliance flue outlet if desired (see 5.4.2), however if additional bends are fitted, a reduction must be made to the maximum flue length (see table below).

Reduction for bends

Bend	Reduction in maximum flue length for each bend
45º bend	0.5 metre
90º bend	1.0 metre

Vertical flue terminal and accessories

Part No.	Description	Length
2359039	Vertical flue terminal	1.0 metre
0225770	Pitched roof flashing plate	N/A
0225765	Flat roof flashing plate	N/A
2359069	750mm extension	750mm
2359079	1500mm extension	1500mm
2359049	45º bend (pair)	N/A
2359059	90º bend	N/A
0225760	Wall bracket (5)	N/A

Using the dimensions given in fig. 14 as a reference, mark and cut a 105mm hole in the ceiling and/or roof.

Fit the appropriate flashing plate to the roof and insert the vertical flue terminal through the flashing plate from the outside, ensuring that the collar on the flue terminal fits over the flashing.

The fixing holes for the wall-mounting bracket & jig should now be drilled and plugged, an appropriate type and quantity of fixing should be used to ensure that the bracket is mounted securely. Once the bracket has been secured to the wall, mount the appliance onto the bracket & jig.

IMPORTANT
The vertical flue terminal is 1.0 metre in length and cannot be cut; therefore it may be necessary to adjust the height of the appliance to suit or use a suitable extension.

Remove or discard the flue restrictor ring from the appliance flue outlet (see fig. 1), if the total flue length – including the allowance for any additional bends – exceeds 1.0 metre.

Connect the vertical flue assembly to the boiler flue spigot using the 60mm & 100mm clips, gaskets, & screws (supplied), ensuring the correct seal is made. The flue support bracket (supplied with the vertical flue kit) can now be fitted.

If the vertical flue requires extension/s or additional bend/s, connect the required number of flue extensions or bends (up to the maximum equivalent flue length) between the boiler and vertical flue assembly (see fig. 13A).

NOTE
When cutting an extension to the required length, you must ensure that the excess is cut from the plain end of the extension and that the inner (60mm) pipe is 7.5mm longer than outer (100mm) pipe (see fig. 13A). Remove any burrs, and check that any seals are located properly.

You must ensure that the entire flue system is properly supported and connected.

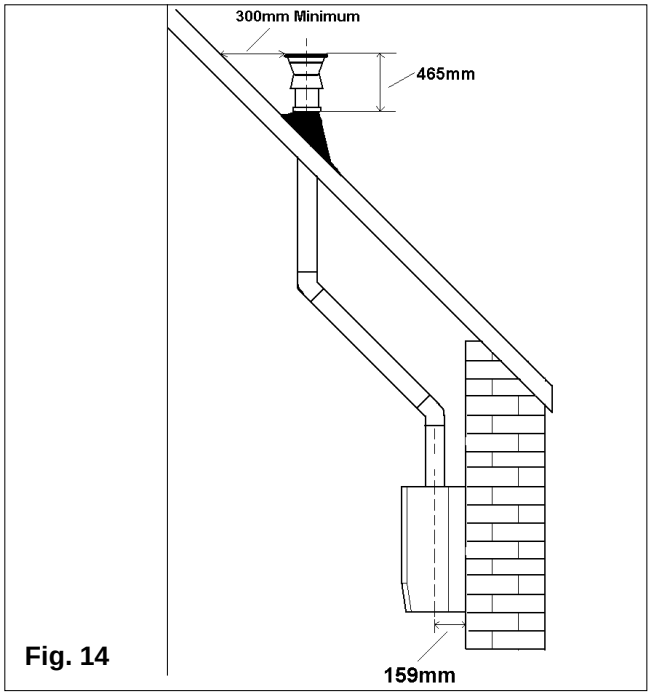

Fig. 14

5.5.3 Twin flue system

The Vokera twin flue system enables greater flue distances to be achieved (see 5.4.2) than that of the standard concentric flue system. It can be used for horizontal or vertical applications, however the twin flue system must be converted to the dedicated concentric flue kit for termination. It is essential that the installation of the twin flue system be carried out in strict accordance with these instructions.

Guidance notes on twin flue installation

- The flue must have a fall back of 1º back to the appliance to allow any condensate that may form in the flue system to drain via the condensate drain. Consideration must also

be given to the fact that there is the possibility of a small amount of condensate dripping from the terminal.

- Ensure that the entire flue system is adequately supported, use at least one bracket for each extension.
- The entire flue system must be adequately insulated to maintain heat within the flue system thereby reducing the possibility of condensate production.
- As the exhaust outlet pipe can reach very high temperatures it must be protected to prevent persons touching the hot surface.

Reduction for bend

Bend	Reduction in maximum flue length for each bend
45º bend	1.0 metre
90º bend	1.0 metre

Twin flue accessories

Part No.	Description	Length
0225805	Horizontal flue terminal	1.0 metre
0225810	Vertical flue terminal	1.0 metre
300	Twin adapter kit	N/A
0225770	Pitched roof flashing plate	N/A
0225765	Flat roof flashing plate	N/A
0225815	Condensate drain kit	N/A
0225820	0.25m extension (pair)	250mm
0225825	0.5m extension (pair)	500mm
0225830	1.0m extension (pair)	1000mm
0225835	2.0m extension (pair)	2000mm
0225840	45º bend (pair)	N/A
0225845	90º bend (pair)	N/A
0225850	Twin bracket (5)	N/A
0225855	Single bracket (5)	N/A

Mounting the boiler

The fixing holes for the wall-mounting bracket & jig should now be drilled and plugged, an appropriate type and quantity of fixing should be used to ensure that the bracket is mounted securely. Once the bracket has been secured to the wall, mount the appliance onto the bracket & jig.

5.5.3.1 Installation of twin adaptor kit (fig. 15)

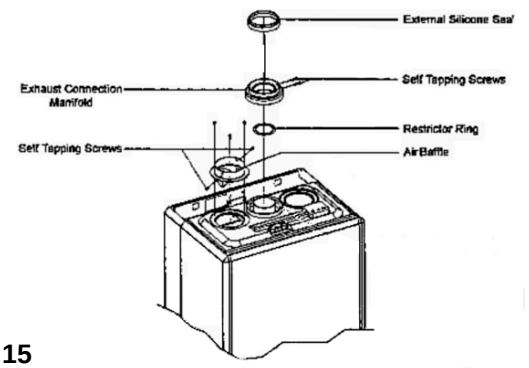

Fig. 15

- Remove or discard the flue restrictor ring from the appliance flue outlet (see fig. 1).
- Insert the small restrictor ring (supplied with the twin adapter kit) **if** the total flue length – including the allowance for any bends – is less than 8 metres.
- Insert the exhaust connection manifold onto the appliance flue outlet.
- Place the silicone seal (supplied with twin adapter kit) over the rim of the exhaust connection manifold.

⇑ Remove one of the blanking plates (located to the left & right of the appliance flue outlet) and – using the same screws – install the air baffle.

5.5.3.2 Installation of condensate drain kit (fig. 16)

The condensate drain kit must be fitted within 1 metre of the appliance flue outlet. It is recommended that the condensate drain kit should be fitted in the vertical plane, however it can be fitted horizontally with care.

- Fit the first bend to the condensate drain kit or exhaust connection manifold by firmly pushing in to position.
- Using the two holes in the exhaust connection manifold as a guide, drill a 3mm hole in each and secure using the screws provided.
- Connect the air inlet pipe to the air baffle as above.
- The twin flue pipes extensions and accessories can now be installed by pushing together (the plain end of each extension or bend should be pushed approximately 50mm into the female socket of the previous piece). The condensate drain trap must be connected to the drain in accordance with Building Regulations or other rules in force.

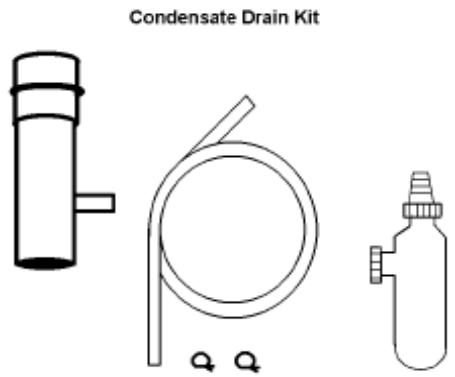

Fig. 16

5.5.3.3 Horizontal termination (fig. 17)

The twin flue system must be converted to the dedicated concentric flue kit for termination.

- The horizontal terminal is supplied with a built-in converter box and cannot be shortened.

- A 130mm hole is required for the passage of the concentric terminal through the wall.

  Depending on site conditions it may be preferable to install the terminal assembly prior to fitting the twin flue pipes.

  Mark and drill a 130mm hole for the passage of the horizontal flue terminal, ensuring that there is a 1º fall back to the boiler (17mm per 1000mm). Insert the terminal assembly into the flue hole.

  Push-fit the twin flue pipes onto the concentric to twin converter ensuring that the exhaust pipe connects to the exhaust connection on the concentric to twin converter.
  If necessary cut the plain ends (male) of the twin flue pipes to allow connection to the concentric to twin converter.

NOTE
- Before cutting twin flue pipes ensure allowances have been made for connection onto the previous piece and onto the concentric to twin converter. The last twin flue pipes must be pushed 50mm onto the male spigots of the concentric to twin converter.

NOTE
You must ensure that the entire flue system is properly supported and connected.

When cutting an extension to the required length, you should ensure that the excess is cut from the plain end of the extension. Remove any burrs, and check that both seals are located properly.

Seal the flue terminal assembly to the wall using cement or a suitable alternative that will provide satisfactory weatherproofing. The interior and exterior trim can now be fitted.

5.5.3.4 Vertical termination (See fig. 18)
The twin flue system must be converted to the dedicated concentric flue kit for termination.
- The vertical terminal is supplied with a built-in converter box and cannot be shortened.
- A 130mm hole is required for the passage of the concentric terminal through the ceiling and/or roof.

Depending on site conditions it may be preferable to install the terminal assembly prior to fitting the twin flue pipes.

Fit the appropriate flashing plate to the roof and insert the vertical flue terminal through the flashing plate from the outside, ensuring that the collar on the flue terminal fits over the flashing.

Push-fit the twin flue pipes onto the concentric to twin converter ensuring that the exhaust pipe connects to the exhaust connection on the concentric to twin converter.
If necessary cut the plain ends (male) of the twin flue pipes to allow connection to the concentric to twin converter.

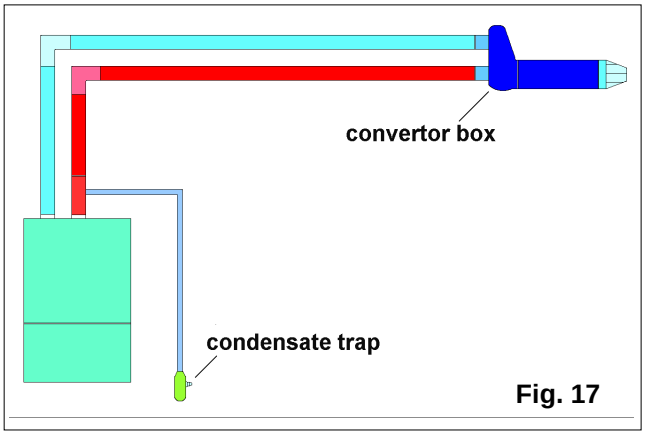

Fig. 17

NOTE
- Before cutting twin flue pipes ensure allowances have been made for connection onto the previous piece and onto the concentric to twin converter. The last twin flue pipes must be pushed 50mm onto the male spigots of the concentric to twin converter.
- You must ensure that the entire flue system is properly supported and connected.
- Ensure that any horizontal sections of pipe have a 1º fall towards the appliance (17mm per 1000mm).
- The convertor box on the vertical terminal will have to be temporarily removed when inserting the terminal through the flashing.
- The condensate trap must be primed with water prior to commissioning the boiler.
- The condensate drain trap must be connected to the drain in accordance with building regulations or other rules in force.

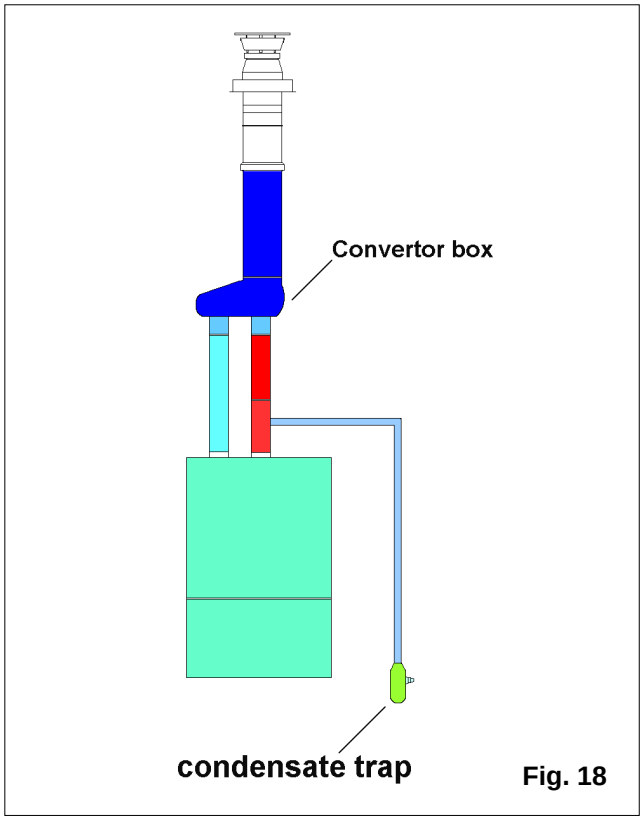

Fig. 18

5.6 Connecting the Gas and Water

5.6.1 Figs. 10 and 16 show the locations of the fittings.

5.6.2 Do not over tighten nuts and use another spanner to apply counter force to avoid damaging the appliance

5.6.3 Gas Supply
Connecting the gas supply.

Connect a 15mm gas pipe to the gas service tap and tighten the union nut securing the tap to the appliance.

5.6.4 Central Heating
Connect the central heating pipework (22mm o.d) to the respective valves, right hand = return, left hand = flow, and tighten the nuts.

5.6.5 Hot Water
Provide a suitable coupling and connect the hot water draw-off pipe to the 15mm o.d tail. Tighten the nut.

If the hot water system does not include a tap below the hot water outlet connection provide a suitable drain tap to permit draining of the appliance hot water side during servicing.

5.6.6 Cold Water
Connect a 15mm cold water service pipe to the inlet stopcock of the appliance. Tighten the nut.

If the cold water supply is liable to large pressure fluctuations, a flow/pressure regulator should be fitted in the supply pipe.

5.6.7 Safety Valve Discharge
The safety valve is located beneath the pump. Connect discharge pipe to the 15mm o.d. tail (using a compression fitting).

When connecting, ensure the discharge pipe does not restrict access to or operation of the central heating return valve. The discharge should terminate facing downwards exterior to the building in a position where discharging (possible boiling) water will not create danger or nuisance; but in an easily visible position.

5.7 Electrical Connections

5.7.1 The electricity supply must be as specified in clause 4.7. If controls external to the appliance are required, design of the external electrical circuits should be undertaken by a competent person.

See Section 10 for further advice.

N.B. IT IS ESSENTIAL THAT ALL EXTERNAL CONTROL CIRCUITS AND WIRING IS WIRED FROM THE SAME ELECTRICAL ISOLATOR AS SERVES THE APPLIANCE.

Factory fitted internal wiring must not be disturbed when wiring external controls.

5.7.2 To gain access to the electrical terminals

Remove finger guard by releasing four securing screws (fig 18a), hinge down the control fascia. (fig. 19a) until it rests in an approximately horizontal position.

Remove electrical cover by releasing four securing screws.

The mains input terminal block is the left hand block located on the front control facia (see fig. 19a).

5.7.3 The electricity supply cable from the isolator and the appliance terminal block must be 3 core flexible sized 0.75mm² (24 x 0.2mm) to table 15-16, BS6500.

Wiring to the appliance should be rated for operation in contact with surfaces up to 90°C.

Fig. 18A

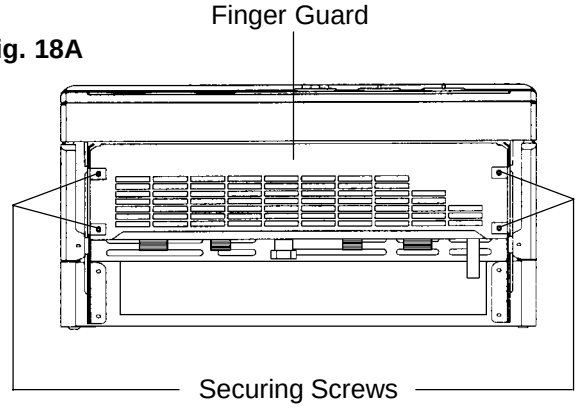

Fig. 19

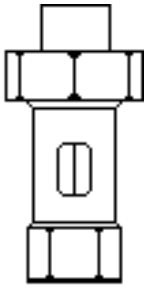

Gas Cock Open

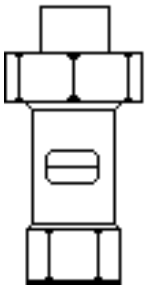

Gas Cock Closed

5.7.4 Pass the cable through one of the cord anchorage points and connect the wires Brown to L, Blue to N, and Green/Yellow to ⏚, arrange the cable so that should the cable slip the anchorage the current carrying conductors become taut before the earthing conductor.

5.7.5 Securely tighten all terminal screws and arrange the cable with slack between the cable anchor and the terminal block. Tighten the cord anchorage screw until the cable is secure.

5.7.6 Neatly arrange the external cable in such a way that unrestricted opening of the controls fascia is possible without strain on the cable.

5.7.7 External controls may be wired from terminals 1 to 2 on the left hand terminal block mounted on the back of the front fascia panel after removing the factory fitted links (see fig. 19A). If a neutral is needed use the terminal marked N on the terminal strip.

Internal controls (ie. Vokèra time clock) may be wired from the right hand terminal block mounted on the back of the front facia after removing the factory fitted link between 4 & 5. See section 10.

If required pass the external controls cable through the spare cord anchorage and arrange the cable so that should the cable slip the anchorage, the current carrying conductors become taut before the earthing conductor.

Fig. 19A

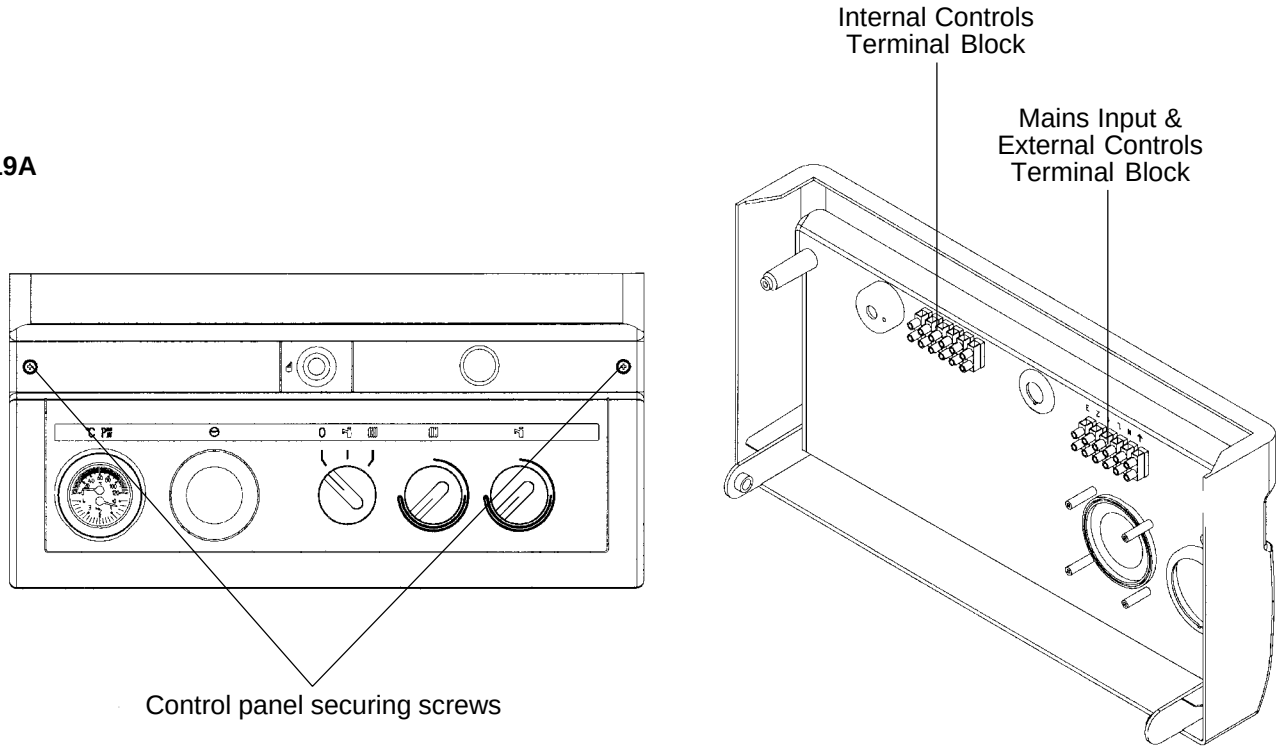

6.1 Where the text bears identifying numbers in brackets, refer to figs. 1 and 2 unless otherwise instructed.

6.2 Gas Supply Installation
Inspect the entire installation including the meter, test for soundness and purge, all as described in BS6891:1988.

6.3 Central Heating Systems

6.3.1 **IMPORTANT** DO NOT RELEASE AIR FROM THE RED SEALED EXPANSION TANK. It is charged with air at the factory from .75 - .80 bar (11 - 12psig)

6.3.2 Initial filling of the System

6.3.2.1 See 3.4.3 and 4.6.8

6.3.2.2 Open central heating flow and return valves (if the indicating line on the square shank is in line with the valve it indicates open, across the valve indicates closed). Unscrew black cap on automatic air release valve (9) one full turn (leave open permanently).

6.3.2.3 Close all air release taps on the central heating system.

6.3.2.4 Gradually open stopcocks at the filling point connection to the central heating system until water is heard to flow. Do not open fully.

6.3.2.5 Starting with the lowest radiator open each air release tap in turn closing it only when clear water, free of bubbles, flows out. In the same away release air from any high points in the pipework.

6.3.2.6 Continue filling the system until at least 1.0 bar registers on the gauge then turn off the filling point stopcocks.

6.3.2.7 Inspect the system for water soundness and remedy any leaks discovered.

6.3.3 Initial flushing of Pipework

The whole of the heating system must be flushed both cold and later hot as detailed in 6.10. Open all radiator or heating valves and the appliance central heating valves. Drain the boiler and system from the lowest points. Open the drain valve full bore to remove any installation debris from the boiler prior to lighting. Refill the boiler and heating system as described in 6.3.2

6.3.4 Setting the System Design Pressure

6.3.4.1 The design pressure must be a minimum of 1 bar and maximum 1.5 bar.

6.3.4.2 The actual reading should ideally be 1 bar plus the equivalent height in metres to the highest point of the system above the base of the appliance up to the maximum of 1.5 bar total).

N.B. The safety valve is set to lift at 3bar / 30m / 45psig.

6.3.4.3 To lower the system pressure to the required value, turn the red knob of the safety valve (11) a quarter turn to release water until the required figure registers on the gauge (19).

6.3.5 Filling the Hot Water System

6.3.5.1 Close all hot water draw-off taps.

6.3.5.2 Open cold water inlet stopcock (see fig. 6a)

6.3.5.3 Slowly open each draw-off until clear water is discharged.

6.4 Checking Electricity Supply

6.4.1 Carry out preliminary checks for continuity, polarity, and resistance to earth (see page 57), gaining access as required according to 5.7.2 in this manual.

6.4.2 Leave the appliance with the control fascia closed and with the mains electricity switched OFF

6.5 Lighting the Boiler

6.5.1 Ensure flow and return valves are open (6.3.3.2)

If external and/or internal controls are fitted (e.g Timeclock and/or Room thermostat) ensure they 'call for heat'. The commissioning of the appliance may be easier if the external/internal controls are disconnected and terminals 1 & 2 and 4 & 5 linked. (For access procedure turn off electricity and refer to 5.7.2 for instructions).

6.5.2 Switch on the mains electricity and turn the on/off/mode switch (17) to

6.5.3 Set the c/h control knob (15) to the highest setting.

6.5.4 The appliance will go through an ignition sequence and the burner will light.

6.5.5 If during the ignition attempt period (10 secs approx.) the boiler fails to light, the ignition control circuit will go to lockout, this is indicated by the lockout reset button on the front control panel being illuminated. The gas valve is de-energised, but leaves the fan and pump running.

6.5.6 In the event of the boiler going to lockout depress the lockout reset button. The two main causes of the boiler going to lockout during commissioning are electrical supply polarity reversed, or air in the gas supply. Check polarity and that the gas supply is completely purged of air and that gas is reaching the boiler then repeat from 6.5.2.

6.6 Checking Burner Pressures

6.6.1 The heat inputs for high and low gas rates are factory set to the maximum values given in section 3.12 for domestic hot water and central heating but it is necessary to check them when commissioning.

6.6.2 The maximum heat input for the central heating mode may be reduced by a simple adjustment to suit the system load. This in no way affects the appliance maximum which is always obtained in the domestic hot water mode.

6.6.3 Turn off the main electricity supply. Gain access to the interior as instructed in 5.7.2.

6.6.4 Locate the main burner pressure test point (Fig. 20) and slacken the screw half a turn in an anti clockwise direction. Attach a suitable pressure gauge. Turn on electricity supply and fully open a domestic hot water tap to operate boiler in dhw mode. Adjust hot water control knob to it's maximum setting.

6.6.5 The pressure reading for maximum rate should be.

24e (N/G)
10.1mbar (plus or minus 1.0mbar)

28e (N/G)
10.1mbar
(plus or minus 1.0mbar)

If the pressure is wrong it should be adjusted as instructed in clause 8.23 (N.B. Whenever the maximum rate is adjusted check and adjust the minimum rate too)

6.6.6 Reduce the domestic water flow rate to approx. 3-4 litres/min, turn the domestic control knob slowly to minimum the boiler output will reduce to the minimum setting. If low flame cannot be established in this way, turn off the electricity supply, release the modulator coil retaining clip and slide the modulator coil off the brass rod. Switch on the electricity supply, the boiler will now light at the minimum setting.

6.6.7 When low flame is established, the pressure reading should be:

24e (N/G)
1.5mbar
(plus or minus 0.15mbar)

28e (N/G)
1.3mbar
(plus or minus 0.13mbar)

If it is different adjustment should be made in accordance with the instructions in 8.23.

6.6.8 If the modulator coil was removed to check the minimum setting, turn off the electricity supply and replace the modulator coil ensuring correct location of clip

6.6.9 **Checking Ignition Heat Input** (Soft Light Ignition).

6.6.10 The soft light ignition pressure is factory set, but it is necessary to check it when commissioning.

6.6.11 Turn off the main electricity supply.

6.6.12 Disconnect the sensing electrode lead from the terminal on the ignition control box (lead towards the rear going to left side of main burner).

6.6.13 Turn on the main electricity supply and turn on a domestic hot water tap to operate the boiler in dhw mode.

6.6.14 The boiler will now light at a reduced pressure, the reading should be 4.0mbar (plus or minus 0.4mbar) (N/G) If the pressure is incorrect it should be adjusted as in 8.23.

N.B. While checking the soft light pressure the burner will only light for approximately 10 seconds before going to lockout.

6.6.15 Turn off the main electricity supply and reconnect the sensing electrode lead to the ignition control box.

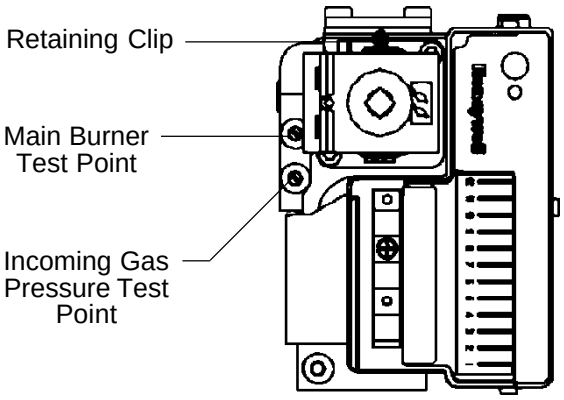

Fig. 20

Fig. 21

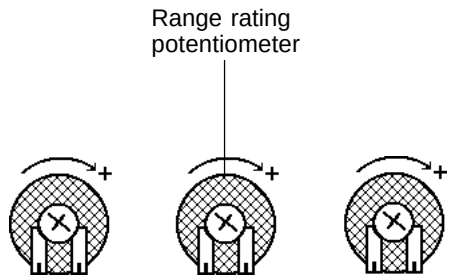

NOTE: Potentiometers located on main p.c.b. on front control panel. Access to p.c.b. is obtained by removing the four cover securing screws.

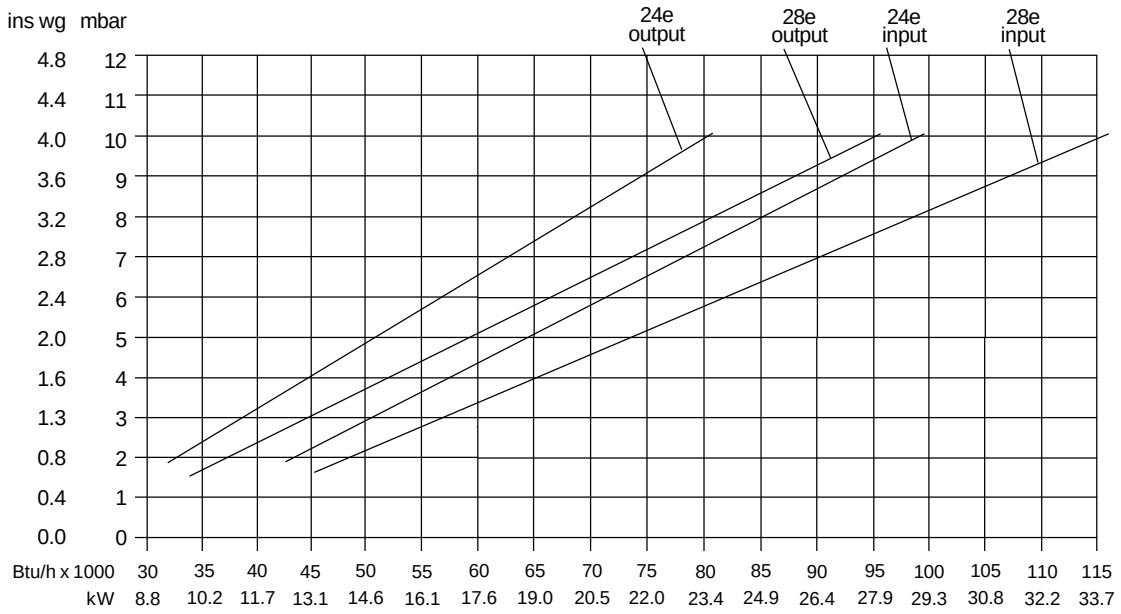

Fig.22

6.6.16 Setting the Maximum Rate for Central Heating (Range Rating)

Refer to fig. 22 to determine pressure for the heating output you need. Turn on the heating with the control knob set at maximum, wait for the burner to reach main flame, using a small screwdriver adjust the potentiometer fig. 21 until the required pressure is indicated on the gauge. Once this pressure has been fixed it should be indelibly recorded on the label provided and affixed next to the data badge. This is to ensure that the burner can be reset when any service operation involves alteration of burner settings.

6.7 Checking the Flue System

6.7.1 The flue system should be visually checked for soundness. Check all clamps and fixings are secure and tight.

6.8 Checking the Heating Thermistor

6.8.1 Allow the system to warm up and manipulate the c/h control knob to ensure that the burner modulates between 'high' and 'low' and then to 'off' and vice versa (scale range covers approx. 45° - 85°C).

6.9 Regulating the Central Heating System

6.9.1 Fully open all radiator and circuit valves and run the appliance in the central heating mode until heated water is circulating. If conditions are warm, remove any thermostatic valve heads.

6.9.2 If the burner will not light, ensure that water is in fact circulating See 4.6.3

6.9.3 Adjust radiator return valves and any branch circuit return valves until the individual return temperatures are correct and are approximately equal.

6.9.4 When all is adjusted, progressively close all radiator valves to ensure that the appliance still operates when flow through the system is limited.

If the burner cuts out prematurely due to lack of water flow through the appliance, the system should be regulated to ensure a flow rate of at least 350 litres/h (78 gals/h). This may mean the addition of a small manual by-pass being fitted to the system if a fully TRV system is used.

6.10 Final Flushing of the Heating System

6.10.1 The system should be flushed in accordance with BS 7593: 1992.Turn on the boiler for central heating and allow the boiler and system to reach temperature. Turn off the boiler and drain the system whilst still hot.

Refill the boiler and heating system as described in 6.3.2.

Although not necessary for correct operation of the boiler, an inhibitor may be added at this point. Contact the inhibitor manufacturer for further information concerning application and dosage.

6.10.2 Inspect the system for soundness. Turn the appliance off at the mode selector switch (fig. 1, 17).

6.11 Filling, Testing and Regulating the Domestic Hot Water System

6.11.1 Start with the appliance switched on having completed the procedures described in 6.4 to 6.10.

6.11.2 Open a domestic hot water tap (Preferably the bath tap).

Ensure cold water inlet stopcock is fully open and the dhw control knob (16) is set at maximum.

6.11.3 The flow of water should activate the differential pressure device and drive the diverting valve (21) to its other position thus heating the domestic water flowing through the dhw heat exchanger. At the same time the domestic micro-switch (13) is activated lighting the burner on maximum rate.

6.11.4 If the burner does not light, check that the water flow rate is above the minimum required to operate the differential pressure device 2.8 litres/min (0.61 gals/min).

6.11.5 The temperature of the water will depend on the rate at which it flows.

If due to high water pressure the flow rate is unacceptably high (and thus the temperature to low for practical use) the flow rate should be adjusted as follows. (see fig. 22a)

6.11.6 a. Adjust the flow using the stopcock until the required temperature is reached.

b. Unscrew the screw (1) & remove the knob (2).

c. Adjust the ring (3). anti-clockwise until it reaches the stop.

d. Refit the knob aligning the register in the knob with the one on the ring.

e. Replace the screw.

It is best to set for the lowest acceptable temperature since the user can gain higher temperatures by restricting flow at the tap.

N.B. If the cold supply is subject to large fluctuations or is above the permitted maximum a suitable pressure/flow regulator should be fitted in the cold water supply to the appliance.

6.11.7 Turn the appliance mode selector switch (17) to the position.

Slowly close the tap to reduce the rate of draw to above the minimum approx. 2.8 litres/min. (0.61 gal/min.) Rotate the dhw control knob to ensure the appliance modulates at its various setting.

6.11.8 Close the draw-off tap still further. The burner should stop when the rate falls below approximately 2.8 litres/min. (0.61 gal/min.).

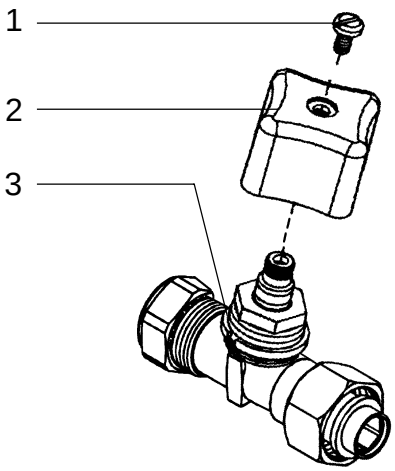

Fig. 22a

6.12 Final Check for Operations

Turn mode selector switch to **0**, disconnect pressure gauge, re-tighten screw. Relight boiler.

6.12.1 Re-check for gas soundness

6.12.2 Re examine heating and hot water systems and cold water supply for water soundness.

6.12.3 Check the appearance of the gas flame to assess adequacy of combustion air supply.

6.12.4 Re-check the flue system for soundness and adequacy of supports.

6.13 Concluding Operations

6.13.1 If external/internal controls have been disconnected and terminals 1 & 2 and 4 & 5 temporarily linked, remove the link and reconnect the controls circuit. Check the operation of the controls.

6.13.2 Hinge up the control fascia.

6.14 Refixing the boiler casing fig. 23

6.14.1 Offer up the front casing to the back frame in a near vertical attitude and locate the hooks on the casing over the hooks on the frame.

Slide the casing downwards to fully engage the hooks and to align the bottom fixing holes. Replace the four case retaining screws. (fig. 23)

6.15 Supplementary Instructions for Fitting & Removing Optional Time Clock and for Wiring to External Controls.

Section 10 Appendices A and B at the rear of this manual provides full instructions for fitting and wiring the optional built-in time switches and for wiring to external controls.

6.16 Complete details of the boiler, controls, installation and commissioning in the log book supplied with the boiler. This is an important document which must be correctly completed and handed to the user. Failure to install and commission this appliance to the manufacturers instructions may invalidate the warranty.

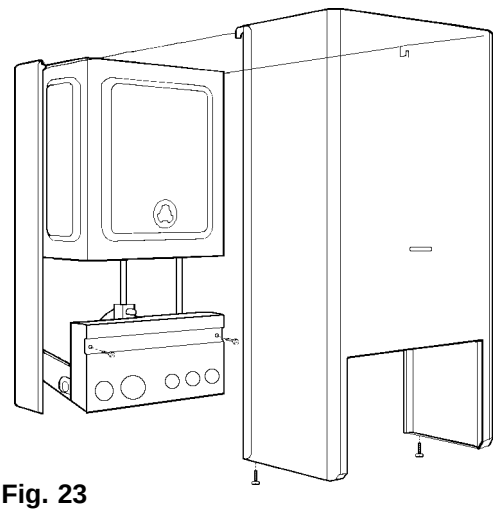

Fig. 23

SECTION 7 INSTRUCTING THE USER

7.1 Hand over the copy of the Users Instructions and boiler logbook supplied with the appliance, together with these instructions, and explain how to operate the boiler correctly and explain how to use the timeclock and room thermostat if fitted.

7.2 Show the user how to switch off the appliance and indicate the position of the electric supply isolator.

7.3 Inform the user of the location of all drain cocks and air vents.

7.4 Explain how to turn the appliance off for both short and long periods and advise on the precautions necessary to prevent damage should the appliance be inoperative when freezing conditions may occur.

7.5 Show the user the filling loop position, its function and how to repressurise the system using the filling inlet valve.

7.6 Advise the User that, for continued safe and efficient operation, the appliance must be serviced by a competent person at least once a year.

SECTION 8 SERVICING INSTRUCTIONS

8.1 General

To ensure the continued safe and efficient operation of the appliance, it is recommended that it is checked and serviced as necessary at regular intervals.

The frequency of servicing will depend upon the particular installation conditions and usage, but in general, once per year should be adequate.

It is the law that any servicing work is carried out by a competent person such as a Vokera approved service agent, British Gas or other CORGI registered personnel.

The following instructions apply to the boiler and its controls, but it should be remembered that the central heating and domestic hot water systems will also require attention from time to time.

8.2 Important Notes

WARNING: Having carried out preliminary flame checks and before starting any servicing work, switch OFF the mains electricity supply and disconnect the plug at the main isolating switch and socket. (If a switch is used remove the fuse.)

Turn off gas supply at the gas service tap fitted to the appliance.

Always test for gas soundness after any service work and after exchanging any gas carrying component.

8.3 Recommended Routine Servicing

8.3.1 Annual Servicing

When servicing is required the following procedures should be carried out.

1. Inspect exterior for signs of damage and deterioration particularly of flue pipework and electrical connections.

2. Turn off mains electricity and remove front casing (see clause 8.4.).

3. Replace fuse if previously removed (8.2. above) and turn on electricity, run the boiler for a few minutes in the domestic hot water mode to permit inspection of its operation. This is accomplished by opening a domestic hot water draw off tap and inspect burner for yellowing of flame tip, flame lift off or sooting.

4. Ensure central heating valves (see fig. 6a) are open. Note these are 1/4 turn valves which are open when the butterfly top is in line with the valve, closed when the butterfly top is across the valve.

Observe pressure gauge reading fig. 1, 19 which should be approximately 1 bar when the system is cold (see 6.3.4)

5. Turn off mains electricity and turn off gas service tap on the appliance.

6. Gain general access as described in 8.4.

7. Remove main burner (see 8.6).
Lightly clean with a soft brush and inspect for damage. If during initial inspection any combustion irregularity was suspected, remove injectors and clean or replace (see 8.7).

8. Place cloth below combustion chamber to catch debris. Clean heat exchanger using suitable brushes and rods if necessary.

9. Inspect combustion chamber lining. The insulating material is easily damaged. Do not scrape, but clean off lightly.

If any panels are damaged these should be replaced (see 8.11).

10. Replace all parts in reverse order but leave the controls fascia open and outer casing off.

11. Undertake a complete commissioning check as detailed in section 6.

12. Close up control fascia and refix front casing.

13. Clean off casing using soft cloth and dilute detergent.

14. Complete details of service undertaken in the boiler log book.

NOTE: There is a flue gas analysis test point incorporated in the flue outlet. (see fig. 26)

8.3.2 Replacement of Parts

1. The life of individual components varies and they will need servicing as and when faults develop. The fault finding sequence charts in section 9 will serve to locate which component is the cause of any malfunction, and instructions for removal, inspection and replacement of the individual parts are given in the following pages.

2. The domestic hot water heat exchanger may in certain conditions become partially blocked by scale deposits. Evidence of this will be deterioration in performance.

This condition could well be treated using proprietary descalants following makers instructions without dismantling the appliance by circulating a fluid through the dhw coil. To do this, disconnection from hot and cold services is necessary. Reconnect only after thorough flushing with clean water.

3. Occasional maintenance of mechanical working parts will be necessary (three port valve, flow diaphragm). Service kits are available from your local Vokera stockists. Vokèra Service Kit No.T0019.

8.4 To Gain General Access/Assembly

To remove components access to the interior is essential. Refer to fig. 24.

Ensure electricity supply is isolated before carrying out any servicing.

8.4.1 To remove front casing.

Release 4 retaining screws fig. 24.

Pull bottom of case slightly forward and push case upwards to disengage from top support hooks and withdraw the case from the appliance.

The control panel can now be hinged down for access.

8.4.2 Reassembly is always carried out in reverse order to dismantling, unless otherwise stated. Electrical connections must be remade in accordance with the wiring diagram figs. 37 & 38.

8.4.3 Wherever gas control components are replaced, check the burner pressures and adjust if necessary (Section 8.23)

8.4.4 If required remove finger guard by removing 4 vertical screws and pull grill downwards (see fig. 18a).

8.5 Room Sealed Chamber Front Cover
Part No. 5904 Refer to fig. 25

8.5.1 Gain general access as 8.4

8.5.2 Remove room sealed front cover plate by releasing eight screws fig. 25) and easing cover off. The screws are not captive. Inspect gasket for damage. If damaged, replace.

NOTE: When refitting the Room sealed chamber front cover it is essential to correctly seat and secure the cover in place ensuring all screws are tightened.

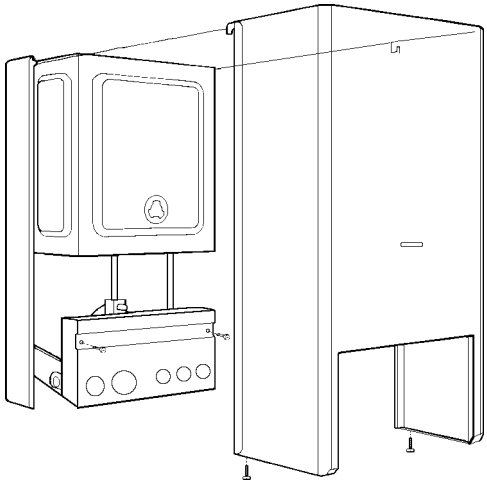

Fig. 24

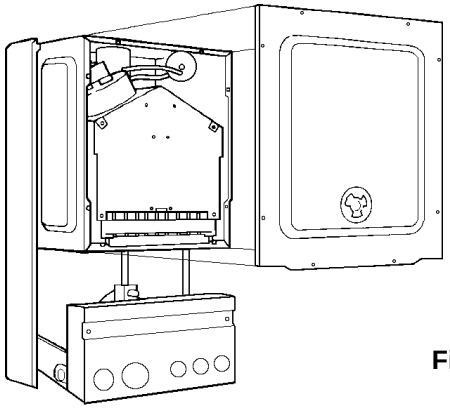

Fig. 25

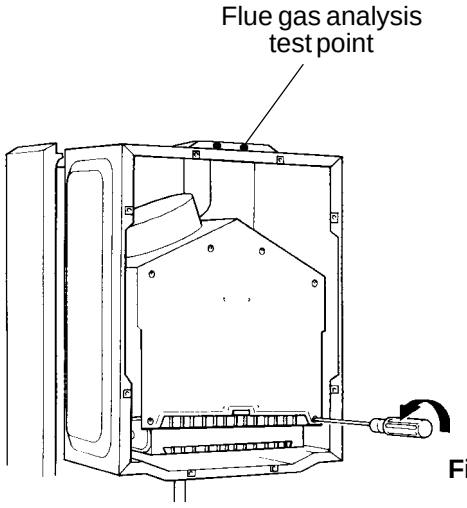

Fig. 26

8.6 Main Burner and/or Spark and Sensing Electrodes

Part No's
Main burner 24e - 5295 28e - 5317 (N/G)
Spark Electrode - 8478
Sense Electrode - 8301
Refer to fig. 27 & 28

8.6.1 Gain general access as 8.4

8.6.2 Remove room sealed front cover 8.5

8.6.3 Remove front of combustion chamber by releasing six screws fig. 26

8.6.4 Remove four burner retaining screws fig. 28 ease burner forward and rest on chamber base.

8.6.5 Release electrode retaining screws & carefully remove electrodes fig. 27.

8.6.6 Trace electrode lead to electronic ignition control and disconnect.

8.6.7 Repeat for sensing electrode.

8.6.8 Remove main burner.

8.6.9 Reassemble in reverse order ensuring correct location of electrodes. Ensure that left hand electrode is connected to rear terminal on electronic ignition control box.

Note: If difficulty is found in relocating the burner securing screws, easier access can be gained by removing the two side panels fig. 27.

8.7 Main Burner Injectors

8.7.1 Gain general access as 8.4

8.7.2 Remove room sealed front cover plate and combustion chamber front (8.5 & 8.6.3).

8.7.3 Remove main burner (8.6.4 to 8.6.8).

8.7.4 Unscrew injector(s) from burner bar.

8.8 Main Heat Exchanger
Part No. 24e - 5351 28e - 5356
Refer to Fig. 28

8.8.1 Gain general access as 8.4

8.8.2 Remove room sealed front cover plate (8.5).

8.8.3 Remove front of combustion chamber (8.6.3).

8.8.4 Remove two air baffle plates. 1 screw securing each fig. 29.

8.8.5 Remove both side panels, 2 screws each fig. 27

8.8.6 Close heating flow and return valves. Note these are 1/4 turn valves which are open when the butterfly top is in line with the valve, closed when the butterfly top is across the valve. Turn safety valve 1/4 turn to drain primary circuit of boiler.

8.8.7 Place cloth under heat exchanger to catch surplus water.

8.8.8 **24e**

Unscrew unions on either side of main heat exchanger.

28e

Disconnect upper flanges by removing 2 screws on each flange.

8.8.9 Slide out main heat exchanger, taking care not to damage insulation panels. Avoid spillage of water on boiler electrics.

8.8.10 Reassemble in reverse order using new fibre washers in unions.

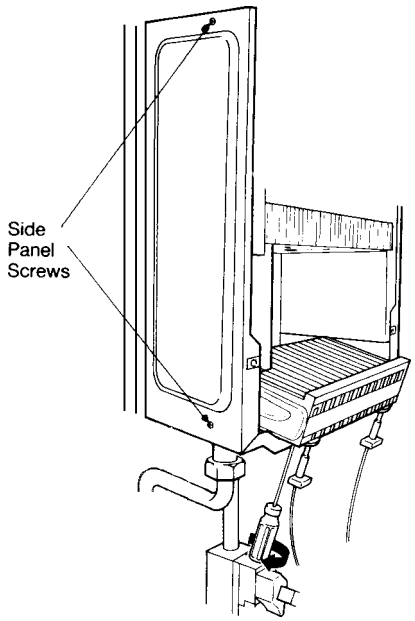

Fig. 27

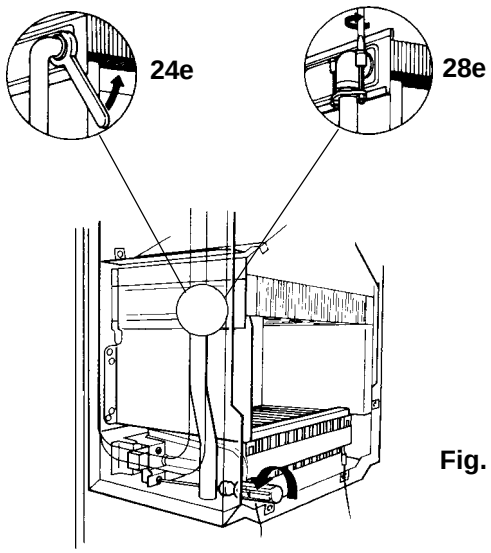

Fig. 28

8.9 **Flue Fan**
Part No. 24e - 7618
28e - 5911

8.9.1 Remove room sealed front cover plate (8.5) and front of combustion chamber (8.6.3).

8.9.2 Loosen maintenance clip securing screws (see fig. 29) and slide upwards to clear joint.

8.9.3 Remove silicone pipes from nozzles on inner flue bend

8.9.4 Remove 3 flue hood retaining screws (see fig. 29)

NOTE: (i) When removing the two side screws the two air baffle plates can be removed. (ii) The centre screw is captive.

8.9.5 Carefully slide flue hood forward disconnecting electrical leads on fan in the process.

8.9.6 Unscrew 4 screws securing fan to flue hood and remove fan. Transfer aluminium manifold (two screws) to new fan.

8.9.7 Reassemble in reverse order, replacing centre hood screw first.

8.10 **Flue Pressure Differential Switch**
Part No 7070
Refer to Fig. 29

8.10.1 Gain general access as 8.4

8.10.2 Remove room sealed cover (8.5)

8.10.3 Remove 2 screws holding pressure differential switch to the combustion chamber.

8.10.4 Pull off tab connectors and remove pressure switch, disconnecting the air pressure pipes in the process.

8.10.5 Reassemble in reverse order.

See fig. 38 for correct fitting of electrical connections. When reconnecting the pressure pipes the upper nozzle on the inner flue bend connects to the front nozzle of the pressure differential switch.

8.11 **Combustion Chamber Insulation Boards**

8.11.1 Gain general access as 8.4

8.11.2 Remove room sealed front cover 8.5
Remove front of combustion chamber 8.6.3.

Close Heating Valves.

Remove Main Heat Exchanger 8.8.

8.11.3 To remove side combustion chamber insulation boards. Gently prise upwards and pull out.

8.11.4 To remove rear board. Gently prise upwards and pull out.

8.11.5 Fourth panel (front) is replaced complete with combustion chamber front panel.

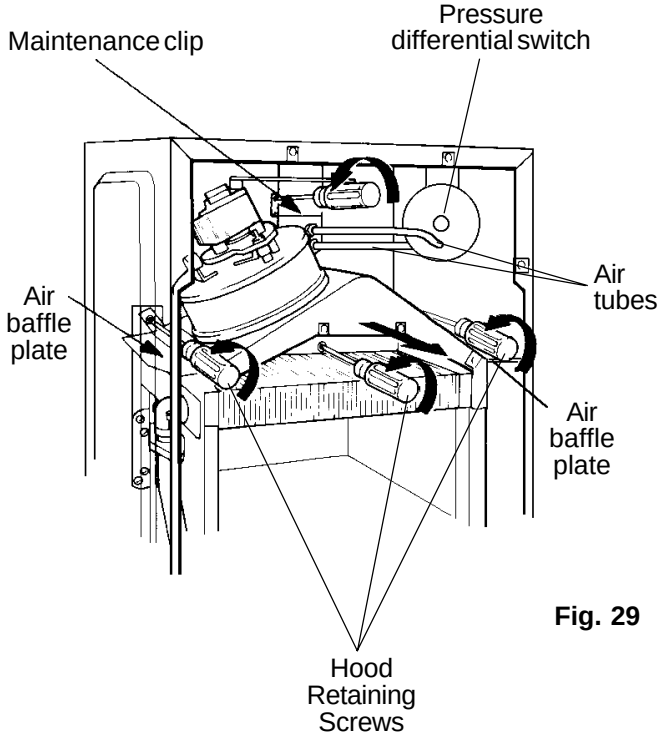

Fig. 29

8.12 **Modulator Coil**
Part No. 6901 (Refer to figs. 30 & 31)

8.12.1 Gain general access as 8.4.

8.12.2 Pull off electrical leads from tab connectors.

8.12.3 Release retaining clip from rear of modulator coil (see fig. 30 & 31).

8.12.4 Remove modulator coil.

8.12.5 Reassemble in reverse order (see fig. 38 for electrical connections).

8.12.6 Check burner pressures (cl 6.6).

8.12.7 **Ignition Control Box**
Part No. 8360

8.12.8 Gain general access as 8.4.

8.12.9 Remove electrical plug-in connector by gently pulling.

8.12.10 Pull off both spark & sensing electrode leads where they connect onto the ignition control box.

8.12.11 Release 1 screw securing ignition box to gas valve body.

8.12.12 Release ignition box from valve body by pulling until clear of plug-in electrical connection.

8.12.13 Reassemble in reverse order ensuring correct location of electrical and spark & sensing lead connections.

8.13 **Gas Control Valve (complete)**
Part No. 8277

8.13.1 Turn off gas service tap.

8.13.2 Remove modulator coil as 8.12 & ignition control box as 8.12.7.

8.13.3 Remove modulator coil brass sleeve by releasing locknut & unscrewing sleeve.

8.13.4 Pull off silicone tube from gas valve regulator.

8.13.5 Unscrew gas service tap union & release from it's seating.

8.13.6 Remove 2 screws securing gas valve bracket to the base frame.

8.13.7 Undo union above the gas control valve & withdraw gas valve.

8.13.8 Remove 8 flange securing screws, 4 securing screws at the top & 4 at the bottom. Transfer both inlet and outlet pipes to new valve ensuring a new gasket is used on each connection.

8.13.9 Reassemble in reverse order.

8.13.10 Test all joints for gas soundness.

8.13.11 Check burner pressures (cl. 6.6).
If incorrect adjust as instructed in cl 8.23.

Fig. 31

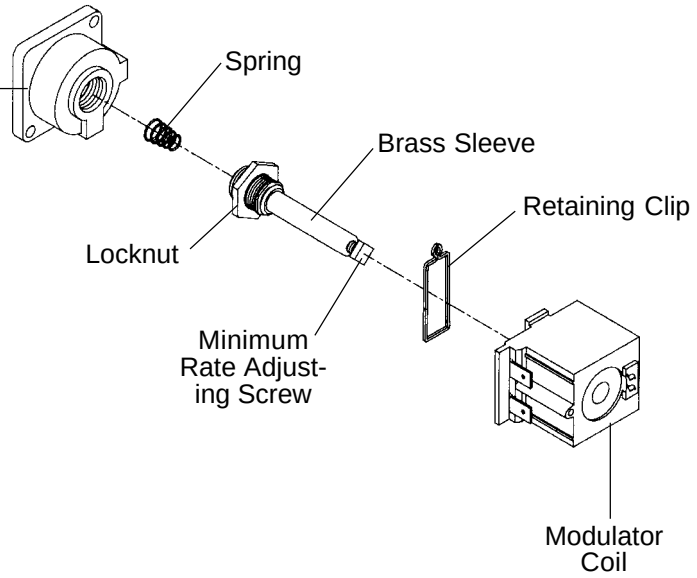

Fig. 30

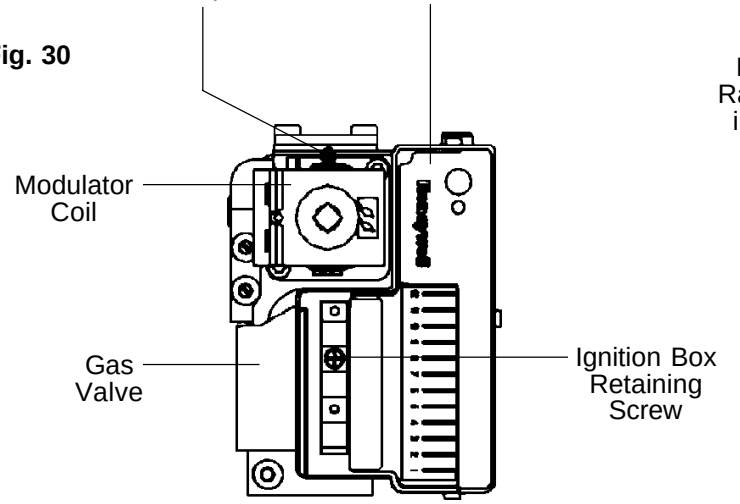

GAS CONTROL VALVE COMPLETE WITH IGNITION CONTROL BOX

8.14 **Pump**
Part No. 6025

8.14.1 Gain general access as 8.4

8.14.2 Close heating flow and return valves fig. 6a by turning butterfly top 1/4 turn until head is 90° to the valve body.

8.14.3 Drain appliance via safety valve by 1/4 turn of safety valve knob.

8.14.4 **HEAD ONLY** Unscrew the 4 allen screws around the pump head. Pull head from base of pump and disconnect electrical leads. If replacement required, use the head from a standard 15-50 Grundfos pump.

8.14.5 **COMPLETE PUMP** Disconnect pipe union connection at rear right corner of combustion chamber.

8.14.6 Undo union at base of pump & remove, disconnecting electrical leads from pump terminal block.

8.14.7 Unscrew automatic air vent from pump housing and transfer to new pump.

8.14.8 Transfer return pipe to new pump using new gasket.

8.14.9 Reassemble in reverse order. Reconnecting electrical leads Brown to L, Blue to N and Green to E.

8.15 **Domestic Distribution Manifold**
Refer to figs. 32 & 33

8.15.1 Gain general access as 8.4.

8.15.2 Place receptacle or an absorbent pad below appliance to catch trapped water.

8.15.3 Close cold water inlet stopcock.

8.15.4 Open lowest draw-off or drain tap on hot water system.

8.15.5 Release positive & negative pressure pipes from manifold by removing 2 retaining clips and gently pull pipes clear of O' ring seal.

8.15.6 Loosen 2 retaining grub screws securing manifold to 3 port valve and withdraw manifold. See fig. 33 for further disassembly.

8.15.7 Reassemble in reverse order.

8.16 **Combined 3 Port Valve & Flow Switch Manifold**
Refer to figs. 32 & 33

8.16.1 Gain general access as 8.4

8.16.2 Place receptacle or an absorbent pad below appliance to catch trapped water.

8.16.3 Remove domestic distribution manifold as 8.15.

8.16.4 Remove domestic hot water heat exchanger as 8.17.

8.16.5 Release both hot water and flow microswitches from the hydraulic group by Removing one retaining clip on each bracket.

8.16.6 Release NTC electrical plug by gently pushing down blue tab and pulling out plug-in connector. Remove NTC by unscrewing from 3 port valve.

8.16.7 Disconnect flow tube & bypass tube unions where they connect onto the hydraulic group.

8.16.8 Disconnect hot water outlet connection & heating flow valve union.

8.16.9 Remove retaining screw between heating flow valve & hot water outlet connection securing hydraulic group to frame.

8.16.10 Withdraw hydraulic group from appliance. See fig. 33 for further disassembly.

8.16.11 Reassemble in reverse order ensuring that washers are replaced in all union connections.

Fig. 32

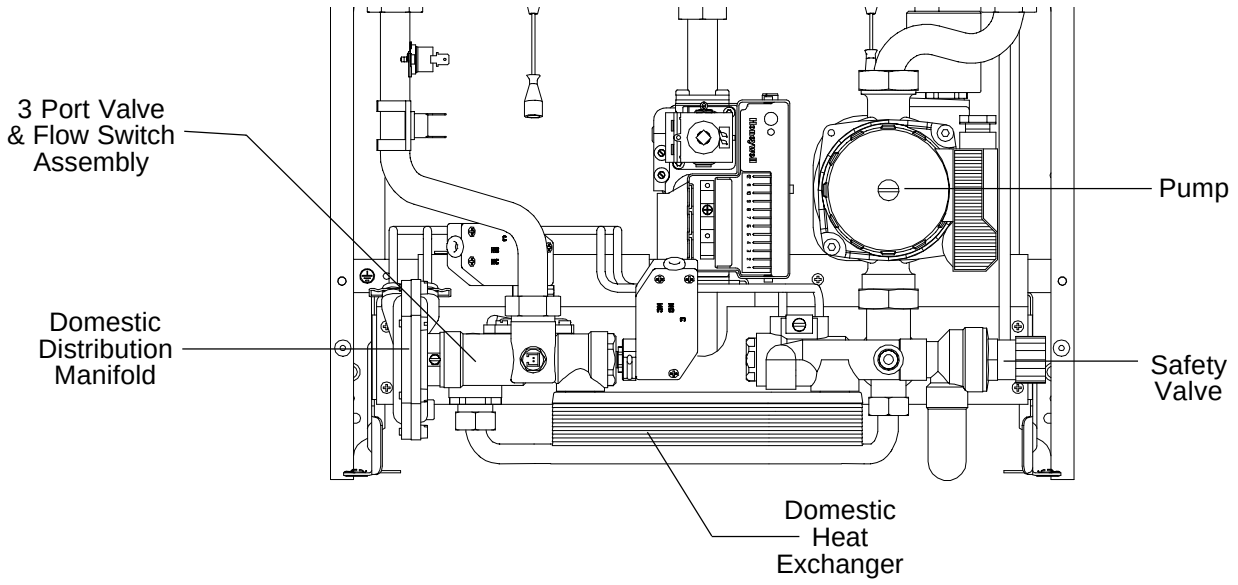

8.17 Removal of Domestic Hot Water Heat Exchanger
Refer to figs. 32 & 33

8.17.1 Gain General access 8.4

8.17.2 Place receptacle or an absorbent pad below appliance to catch trapped water.

8.17.3 Close cold water inlet stopcock.

8.17.4 Open lowest draw-off or drain tap on hot water system.

8.17.5 Close heating flow and return valves fig. 6a by turning butterfly top 1/4 turn until head is 90° to the valve body.

8.17.6 Drain appliance via safety valve by 1/4 turn of safety valve knob.

8.17.7 Remove finger guard by releasing 4 securing screws.

8.17.8 Remove 2 domestic heat exchanger retaining screws whilst supporting unit from below.

8.17.9 Gently release heat exchanger from O' ring seals by rocking to the rear and remove.

8.17.10 Reassemble in reverse order, using new O' rings if required.

8.18 Heating Return & Cold Water Inlet Manifold
Refer to fig. 33

8.18.1 Gain general access 8.4

8.18.2 Remove pump (complete) as 8.14.

8.18.3 Remove domestic heat exchanger as 8.17.

8.18.4 Disconnect safety valve discharge pipe.

8.18.5 Disconnect expansion vessel pipe union.

8.18.6 Disconnect pressure gauge sensor where it joins the manifold.

8.18.7 Release positive & negative pressure pipes from manifold by removing securing screw & clip. Gently ease pipes up until clear of O ring seal.

8.18.8 Disconnect bypass tube union where it connects onto the manifold.

8.18.9 Remove retaining screw between heating return valve & cold water stopcock securing manifold to frame.

8.18.10 Withdraw manifold from appliance.

8.18.11 Reassemble in reverse order ensuring that washers are replaced in all union connections.

8.19 Checking/Replacing Main Expansion Vessel

8.19.1 The expansion vessel is factory pressurised from .75 - .80 bar (11 - 12psig) and should be checked during servicing. Should it have lost pressure it can be repressurised in situ. Drain the boiler. Fit a suitable pump and gauge (i.e. car foot pump and gauge) to the nipple at the top left-hand side of the expansion vessel, and pressurise from .75 - .80 bar (11 - 12psig) and remove the pump.

NOTE: Access to the nipple can be improved by loosening the upper vessel retaining screws and rocking the vessel forwards.

If the vessel cannot be repressurised or if pressure loss is very frequent the expansion vessel will require changing. Alternatively, a new vessel can be fitted in the return to the appliance, and the old vessel isolated in situ.

8.19.2 Switch OFF mains electricity and gain general access. Disconnect electricity supply and wiring for external controls from the appliance (read cl. 5.7)

8.19.3 Close heating flow and return valves fig. 6a by turning butterfly top 1/4 turn until head is 90° to the valve body.

8.19.4 Drain appliance via safety valve by 1/4 turn of safety valve knob.

8.19.5 Remove screws on large maintenance clip/s (fig. 14) and remove, loosen screws on the small clip/s and disconnect flue.

8.19.6 Disconnect all pipe unions at the base of the appliance.

8.19.7 Remove lower fixing screws (fig. 11) and lift appliance off upper bracket.

8.19.8 Remove two screws securing vessel at top. Disconnect expansion pipe at base of expansion vessel and lift vessel out of the appliance.

8.19.9 Reassemble in reverse order, using new fibre washers.

8.20 Safety Valve
Part No. 4250 Refer to figs.32 & 33

8.20.1 Gain General Access 8.4.

8.20.2 Close heating flow and return valves (fig. 6a) by turning butterfly top 1/4 turn until head is 90° to the valve body.

8.20.3 Drain appliance via safety valve by 1/4 turn of safety valve knob.

8.20.4 Disconnect safety valve discharge pipe.

8.20.5 Unscrew safety valve from manifold

8.20.6 Replace in reverse order.

8.21 Removal of Electrical Components

8.21.1 Ensure electricity is switched off at main isolator and gain general access as 8.4.

8.21.2 Flow Microswitch
Fig. 1, no. 23

8.21.3 Gain general access 8.4

8.21.4 Release microswitch from hydraulic group by removing one securing clip.

8.21.5 Remove microswitch cover by unscrewing 3 securing screws & disconnect electrical connections within.

8.21.6 Reassemble in reverse order ensuring correct location of electrical connections. (see fig. 38 for electrical connections)

8.21.7 Domestic Microswitch
Fig. 1, no. 13

8.21.8 Gain general access 8.4

8.21.9 Release micro switch from hydraulic group by removing one securing clip.

Fig. 33

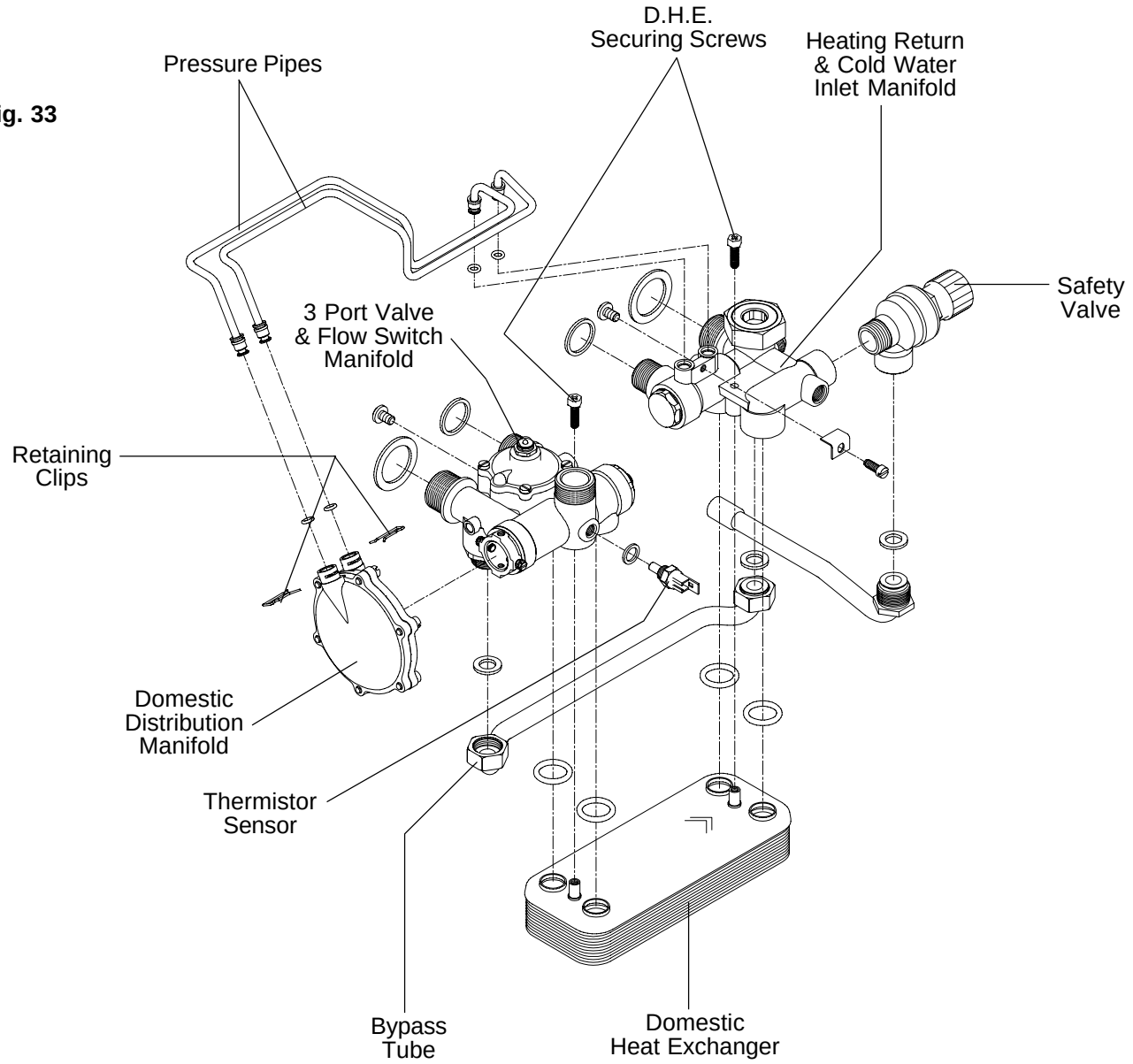

8.21.10 Remove microswitch cover by unscrewing 3 securing screws & disconnect electrical connections within.

8.21.11 Reassemble in reverse order ensuring correct location of electrical connections. (see fig. 38 for electrical connections)

8.21.12 **Printed Circuit Board**
Part No. 8481

8.21.13 Gain general access as 8.4 & remove finger guard as 8.4.4.

8.21.14 Remove three control knobs from front of control panel (pull off).

8.21.15 Remove printed circuit board cover by releasing 4 securing screws.

8.21.16 Pull out 7 multi plug connectors from the printed circuit board.

8.21.17 Remove 3 screws securing circuit board to front panel and remove board.

8.21.18 Reassemble in reverse order ensuring correct location of electrical connections. (see fig. 38 for electrical connections)

NOTE: It will also be nesasary to check/ adjust the soft light, minimum rate for c/h & range rating settings as cl. 8.23.3 to 8.23.5.

8.21.19 **Safety & Fan Overrun Thermostats**
Part No's 8367 & 4931 Refer fig. 33a

8.21.20 Gain general access as 8.4.

8.21.21 Pull off the two electrical connections on the back of the thermostat.

8.21.22a SAFETY THERMOSTAT.
Release stat from flow pipe by unscrewing 2 retaining screws.

8.21.22b FAN OVERRUN THERMOSTAT
Release stat from flow pipe by pulling off securing clip.

8.21.23 Reassemble in reverse order ensuring correct location of electrical connections. (see fig. 38 for electrical connections)

8.21.24 **Thermistor Sensor**
Part No. 8484 Refer to fig. 33

8.21.25 Gain general access as 8.4.

8.21.26 Close heating flow and return valves (fig. 6a) by turning butterfly top 1/4 turn until head is 90° to the valve body.

8.21.27 Drain appliance via safety valve by ¼ turn of safety valve knob.

8.21.28 Pull off electrical plug connection from thermistor.

8.21.29 Unscrew thermistor from flow tube.

8.21.30 Reassemble in reverse order.

8.22 **Combined Pressure & Temperature Gauge**
Part No 8809

8.22.1 Gain general access 8.4

8.22.2 Close heating flow and return valves (fig. 6a) by turning butterfly top 1/4 turn until head is 90° to the valve body.

8.22.3 Drain appliance via safety valve by 1/4 turn of safety valve knob.

8.22.4 Trace capillary from back of pressure gauge to connecting point on brass manifold.

8.22.5 Unscrew retaining nut and pull out capillary tube from manifold.

8.22.6 Trace capillary tube from back of temperature gauge to sensor on flow pipe.

8.22.7 Ease off sensor retaining clip.

8.22.8 Squeeze plastic locking lugs behind fascia and press gauge from aperture.

8.22.9 Reassemble in reverse order following original route for capillary tubes and ensuring locking lugs are located in the grooves.

Fig. 33a

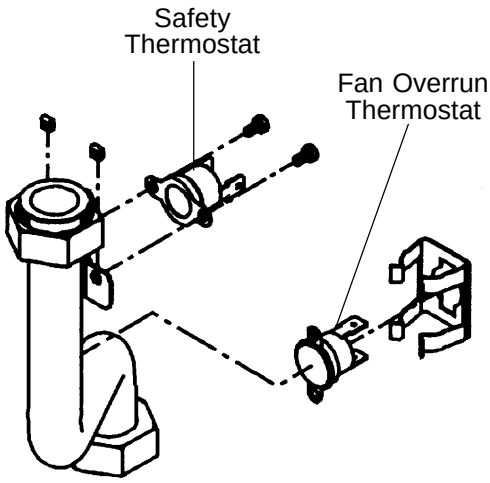

Fig. 34

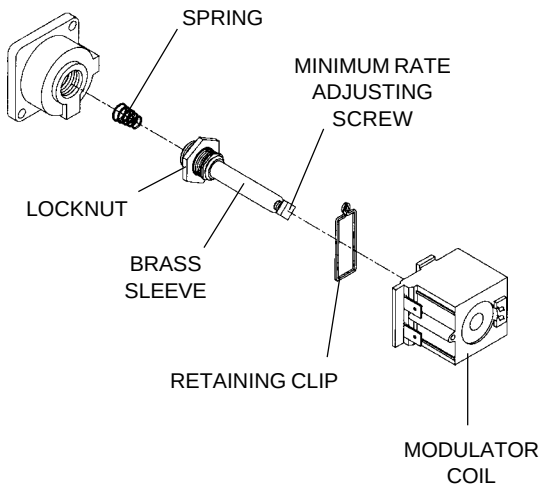

8.23 Setting Gas Pressures

ALL SETTINGS DONE WITH “U” GAUGE FITTED TO BURNER TEST NIPPLE AS INSTRUCTED IN CLAUSE 6.6

8.23.1 Setting Maximum Rate

Turn off electrical supply to boiler and follow instructions in section 8.4 to gain access.

Refer to Fig. 34.

Disengage retaining clip at rear of coil.

Remove the modulator coil from the brass shaft.

Screw fully in by hand the minimum rate adjusting screw in a clockwise direction.

Loosen the locknut on the brass sleeve.

Turn on the electricity supply and the appliance mode selector switch to Turn on fully a domestic draw off tap.

The boiler will now light at full flame, if not screw the brass sleeve slowly clockwise until the burner lights.

Adjust the brass sleeve until the correct pressure is obtained on the gauge. The correct reading should be:

24e (N/G)
10.1 mbar / 3.9 in w.g.
plus or minus 1.0 mbar / 0.39 in w.g.

28e (N/G)
10.1 mbar / 3.9 in w.g.
plus or minus 1.0 mbar / 0.39 in w.g.

Tighten the locknut ensuring that the reading does not change.

8.23.2 Setting Minimum Rate (DHW)

Turn the minimum adjusting screw anti clockwise until the minimum gas pressure is achieved the correct reading should be:

24e (N/G)
1.5 mbar / 0.59 in w.g.
plus or minus 0.15 mbar / 0.05 in w.g.

28e (N/G)
1.3 mbar / 0.51 in w.g.
plus or minus 0.13 mbar / 0.05 in w.g.

Reassemble the modulator coil on the brass sleeve relocating the retaining clip.

8.23.3 Setting Minimum Rate (C/H)

Turn off the hot water draw off tap and turn the mode selector switch to the position, ensure that the room thermostat and/ or timeclock (if fitted) are calling for heat. Turn the "range rating" potentiometer fully anti-clockwise (see fig. 21).

The gas pressure should now be:

24e (N/G)
1.9 mbar / 0.74 in w.g.
plus or minus 0.19 mbar / 0.07 in w.g.

28e (N/G)
1.6 mbar / 0.62 in w.g.
plus or minus 0.16 mbar / 0.06 in w.g.

If the reading is incorrect it should be adjusted as follows:

With the boiler still in central heating mode and the burner at the minimum rate, using a small screwdriver turn the left hand potentiometer fig. 35 clockwise to increase & anti-clockwise to decrease the C/H minimum gas pressure.

When all is adjusted, refer to cl. 6.6.16 for details on recalibrating the range rating potentiometer.

8.23.4 Setting Ignition Heat Input (Soft Light Ignition)

Turn off the main electricity supply.

Disconnect the sensing electrode lead from the rear terminal on the ignition control box.

Turn on the main electricity supply and turn on a domestic hot water tap to operate the boiler in dhw mode.

The boiler will now light at a reduced pressure, the reading should be:

4.0mbar / 1.6in wg
plus or minus 0.4mbar / 0.16in wg (N/G)

If the pressure is incorrect, using a small screwdriver adjust the potentiometer fig. 35 until the reading is correct.

N.B. While checking the soft light pressure the burner will only light for approximately 10 seconds before going to lockout.

If the setting has not been completed in this time depress the ignition reset button which will be illuminated and repeat the procedure again.

When adjustments are complete, turn off the main electricity supply and reconnect the sensing electrode lead to rear terminal on the ignition control box.

8.23.5 Central Heating (Range Rating) to Set Maximum Rate in Central Heating Mode.

See clause 6.6.16 for necessary adjustments. Refer to the commissioning rate recorded by the commissioning engineer on the boiler badge.

8.24 End of Servicing

Run through the general commissioning as described in Section 6 as far as they apply.

Refit casing and clean up.

Fig. 35

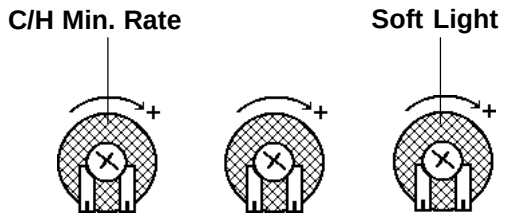

NOTE: Potentiometers located on main p.c.b. on front control panel. Access to p.c.b. is obtained by removing the four cover securing screws.

9.1 On completion of any service/fault finding task which has required the breaking and remaking of electrical connections, the checks Earth Continuity, polarity and Resistance to Earth must be repeated.

The following flow diagrams suggest the logical sequence of steps for fault finding.

They are not exhaustive but cover all that can reasonably be carried out on site by the installer.

Acquaintance with the functional sequence will prove helpful for some, and this is included for reference. As further help, the role of each part is briefly described.

Also included in this section are wiring diagrams and schematics to assist in fault location and servicing as described in the text.

9.2 Sequence of Functions

When following this sequence, refer to figs. 37 & 38. It is assumed that the mode selector switch is in the position.

9.2.1 Domestic Hot Water Mode

Turning on a tap will cause the domestic diaphragm to move operating the hot water flow microswitch.

The domestic diaphragm acts on the diverter valve which diverts the primary water to the domestic heat exchanger. Activation of the microswitch will start the fan and pump, the fan will change over the pressure differential switch. With sufficient primary water circulating around the appliance the flow switch is operated. Once these actions have been proven the gas valve will be energised and the electrode will start to spark.

If a flame is detected during the ignition attempt time (8-12 seconds) the sparking will cease and the gas valve will remain energised and the appliance will produce hot water as described below.

If a flame is not detected the appliance will go to lockout (failure to detect a flame during ignition attempt time). At which time the gas valve will be de-energised and the sparking will stop.

To reset the appliance after lockout depress the ignition reset button on the front control panel which will be illuminated.

The temperature rise of primary water in the appliance is sensed by a thermistor on the three port diverter valve. An increase in temperature will in turn decrease the voltage reaching the modulator coil causing the gas rate to be lowered, if the temperature rise is too great the gas valve can turn off completely.

Conversely a fall in temperature of the primary water will increase the low voltage to the modulator coil and this in turn increases the gas rate accordingly.

Constant monitoring of the temperature of the primary water by the thermistor will regulate the gas rate between high & low rate to maintain an average heat input.

NOTE: As the thermistor senses the temperature of the primary water leaving the main heat exchanger, the amount of heat transferred from the primary water to the dhw water depends upon the temperature differential between them.

When the dhw water draw off rate drops below the permitted minimum (2.8 l/min) the single micro switch is deactivated, and the appliance either reverts to the 'Rest' mode where the fan may overrun to remove residual heat, or if there is a call for heating to the mode described below.

9.2.2 Central Heating Mode

In this mode the mode selector switch must be turned to the position.

With all controls calling for heat the pump will run and provided sufficient primary water is circulating the flow switch is activated.

The fan will run and the pressure differential switch will be activated. This in turn will energise the electronic ignition control box.

The gas valve will be energised and the electrode will start to spark.

If a flame is detected during the ignition attempt period, (8-12 seconds) the sparking will cease and the gas valve will remain energised. The gas rate will increase to the gas rate for c/h which was predetermined at the commissioning stage by an on-site adjustment of the potentiometer to suit the system requirements.

The temperature rise of the primary water is sensed by the thermistor on the three port diverter valve.

As the temperature of the primary water approaches that set on the c/h temperature control, the voltage to the modulator coil will decrease and thus lower the gas rate.

On reaching the set temperature the gas valve is de-energised and the burner is extinguished.

The appliance has an inbuilt delay timer and re-ignition will not be attempted for approximately 3 minutes.

Conversely a fall in temperature of the primary water will increase the voltage to the modulator coil and therfore increase the gas rate.

Constant monitoring of the temperature of the primary water by the thermistor will regulate the gas rate between high & low to maintain an average heat input.

When the appliance has reached the set temperature and the burner is off, the pump will continue to run to circulate the primary water around the c/h system.

If supply to the appliance is broken e.g. by a room thermostat or timeclock the burner is extinguished and the pump stops, but the fan will continue to run until the primary water temperature is below 80°C.

Should there be a restriction in the heating circuit reducing the flow rate to below 350 l/hour (1.28 gpm) the flow switch will deactivate and de-energise the gas valve.

FAULT FINDING GUIDES

On the following pages are the fault finding guides, be sure to read the notes below before begining any fault finding

NOTES:

1. To ensure correct fault diagnosis it is important that these guides are carried out in the set order.

2. Check the electrical supply polarity is correct before carrying out fault finding (lockout will occur if the polarity is reversed).

3. To ensure that internal/external controls (if fitted) do not interfere with fault finding, disconnect the wires from terminals 1 & 2 and 4 & 5 (labelling them in the process to ensure correct reconnection) and provide a solid link between 1 & 2 and 4 & 5.

TEST A : CHECKING OPERATION OF ELECTRONIC CONTROL BOARD

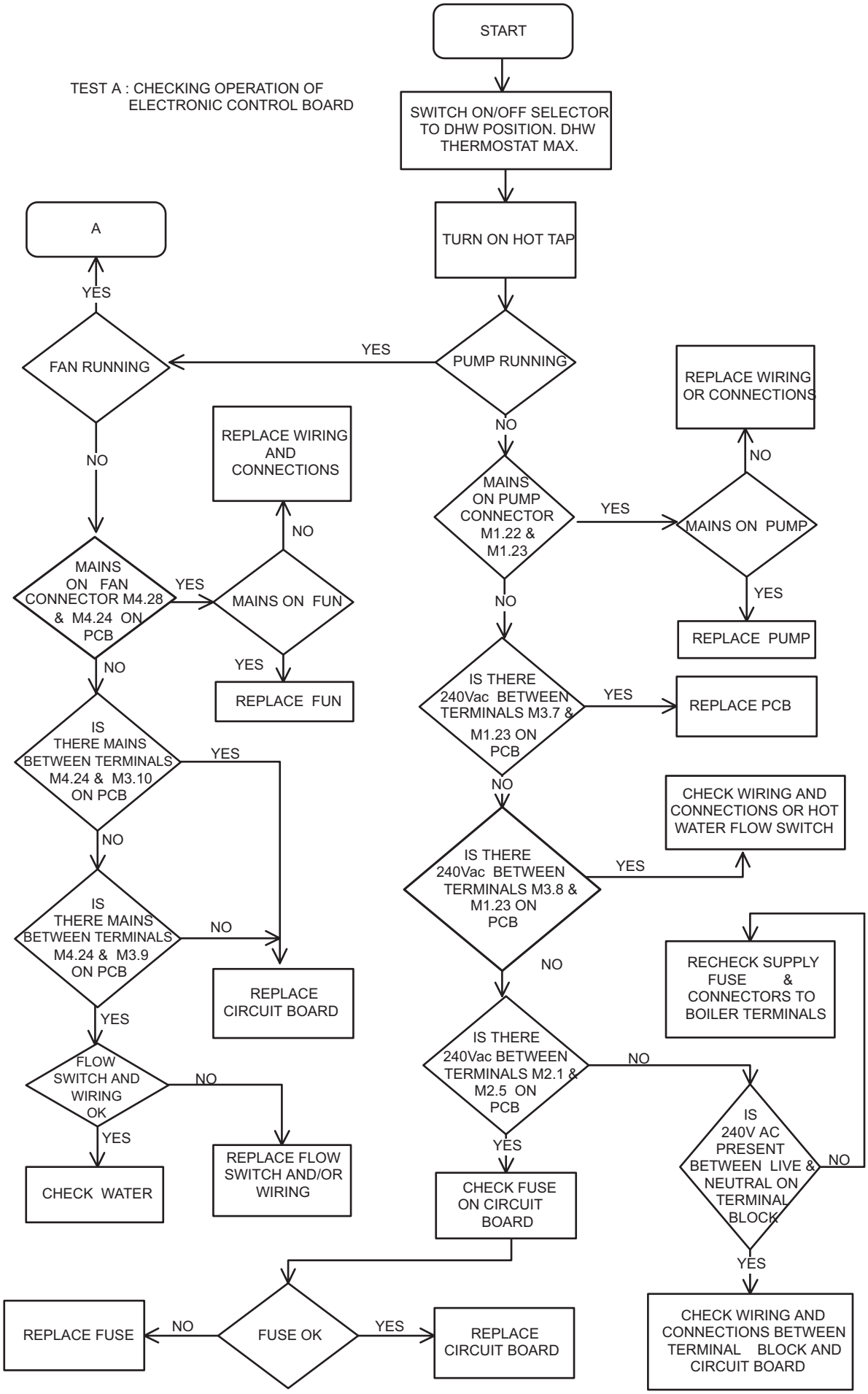

TEST B :CHECK CONTROLS IN DHW MODE

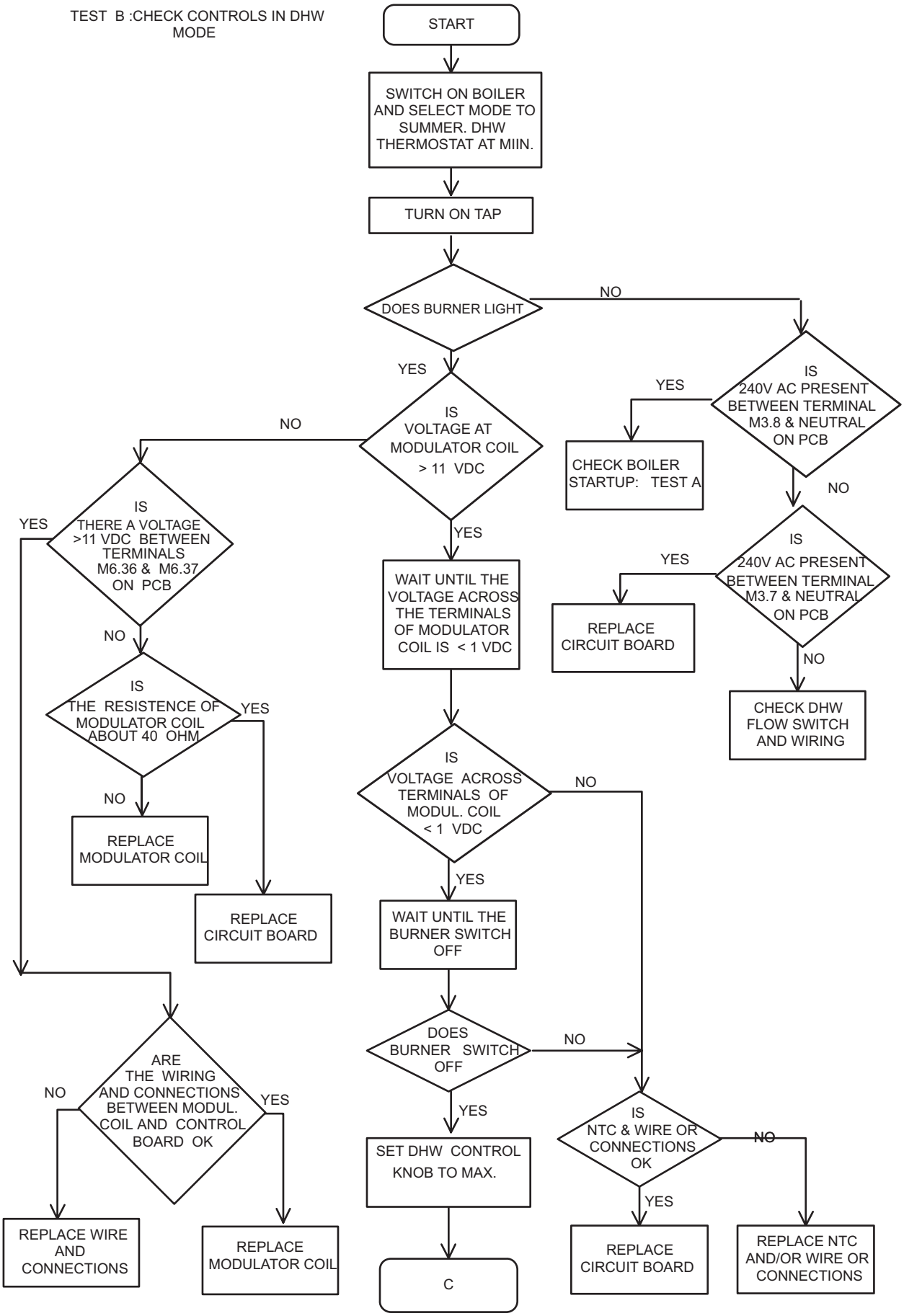

TEST C: CHECK CONTROL IN C/H MODE

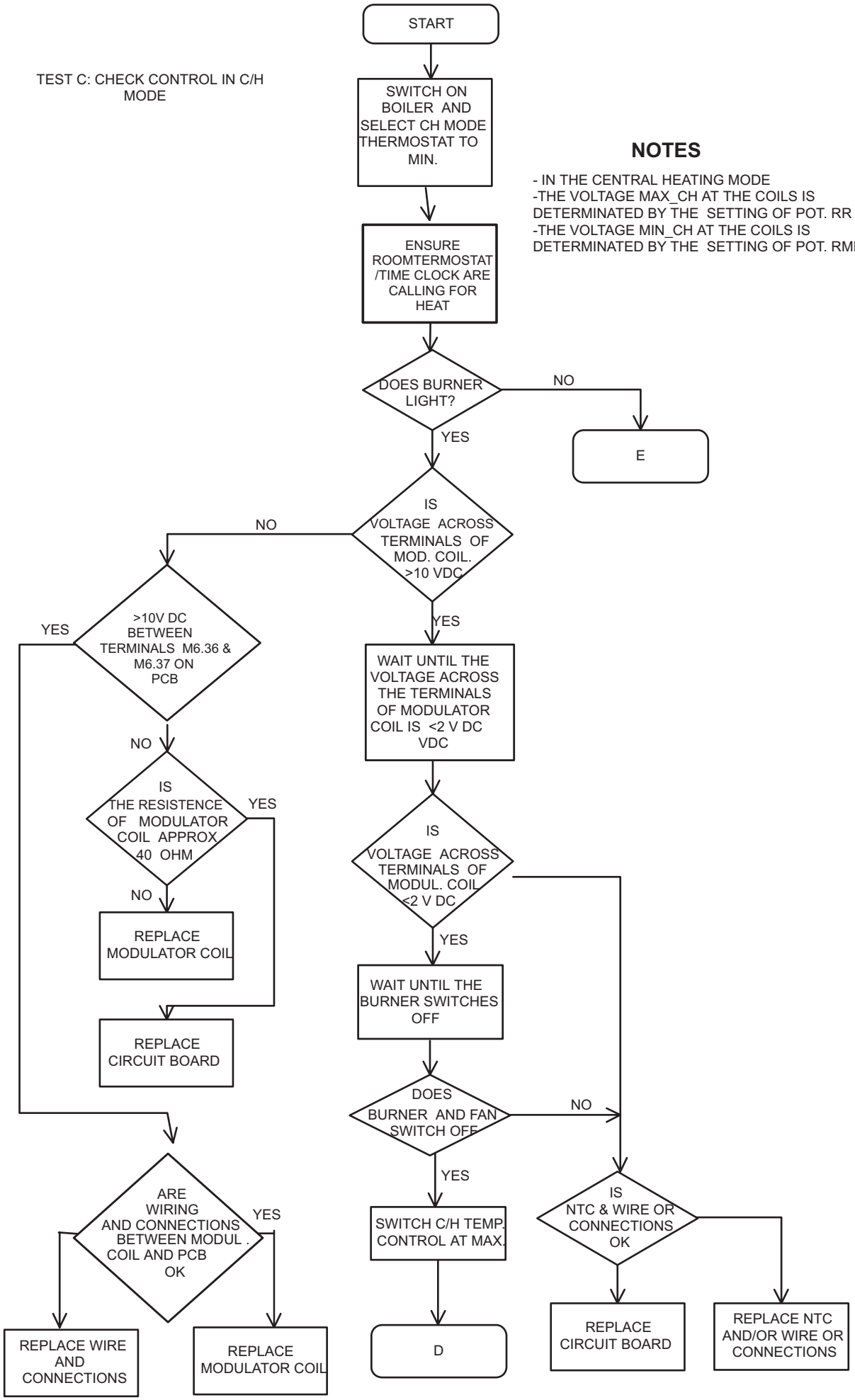

NOTES

- IN THE CENTRAL HEATING MODE
-THE VOLTAGE MAX_CH AT THE COILS IS DETERMINATED BY THE SETTING OF POT. RR
-THE VOLTAGE MIN_CH AT THE COILS IS DETERMINATED BY THE SETTING OF POT. RMR

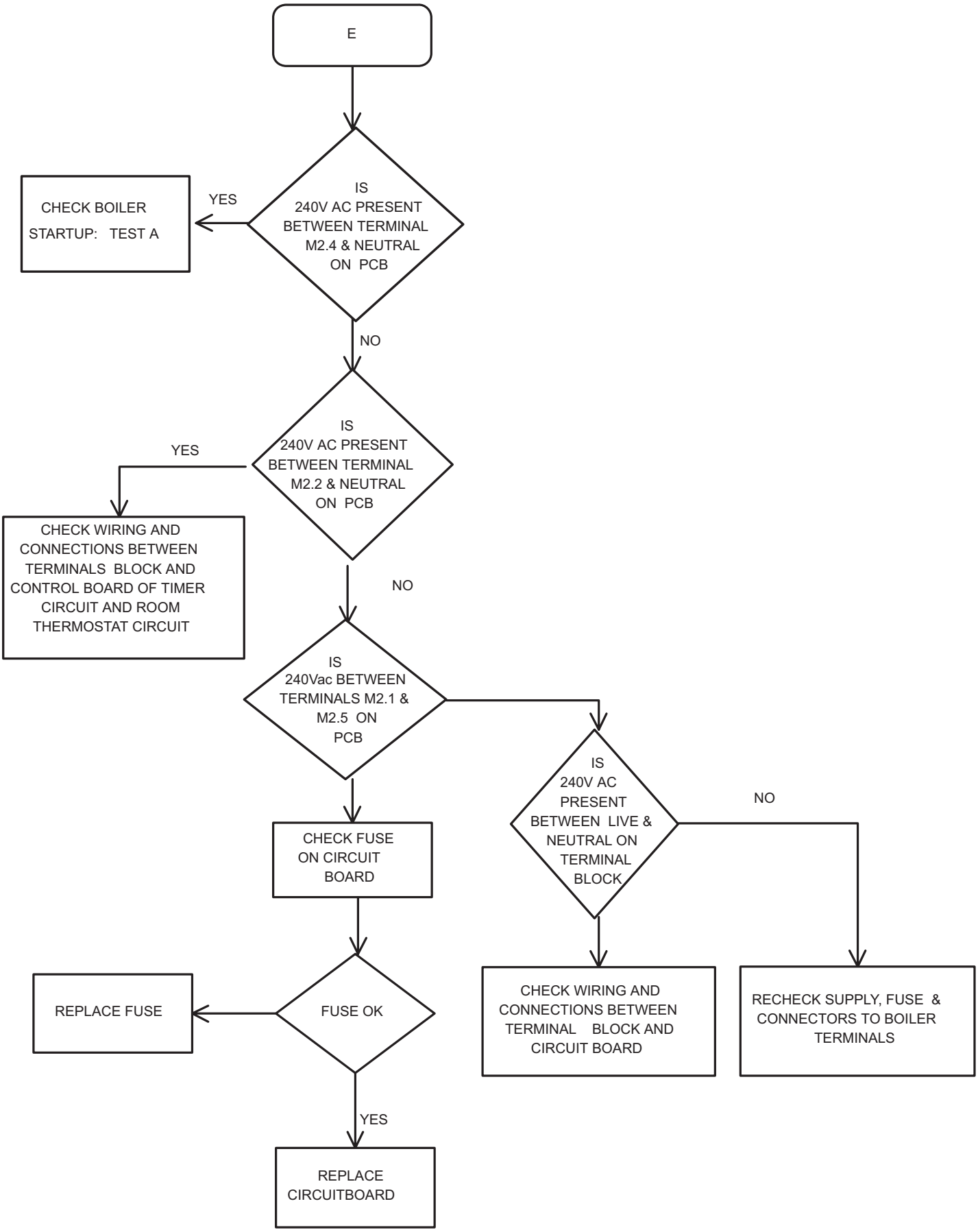
E
IS 240V AC PRESENT BETWEEN TERMINAL M2.4 & NEUTRAL ON PCB
YES
CHECK BOILER STARTUP: TEST A
NO
IS 240V AC PRESENT BETWEEN TERMINAL M2.2 & NEUTRAL ON PCB
YES
CHECK WIRING AND CONNECTIONS BETWEEN TERMINALS BLOCK AND CONTROL BOARD OF TIMER CIRCUIT AND ROOM THERMOSTAT CIRCUIT
NO
IS 240Vac BETWEEN TERMINALS M2.1 & M2.5 ON PCB
IS 240V AC PRESENT BETWEEN LIVE & NEUTRAL ON TERMINAL BLOCK
NO
CHECK FUSE ON CIRCUIT BOARD
FUSE OK
REPLACE FUSE
YES
REPLACE CIRCUITBOARD
CHECK WIRING AND CONNECTIONS BETWEEN TERMINAL BLOCK AND CIRCUIT BOARD
RECHECK SUPPLY, FUSE & CONNECTORS TO BOILER TERMINALS

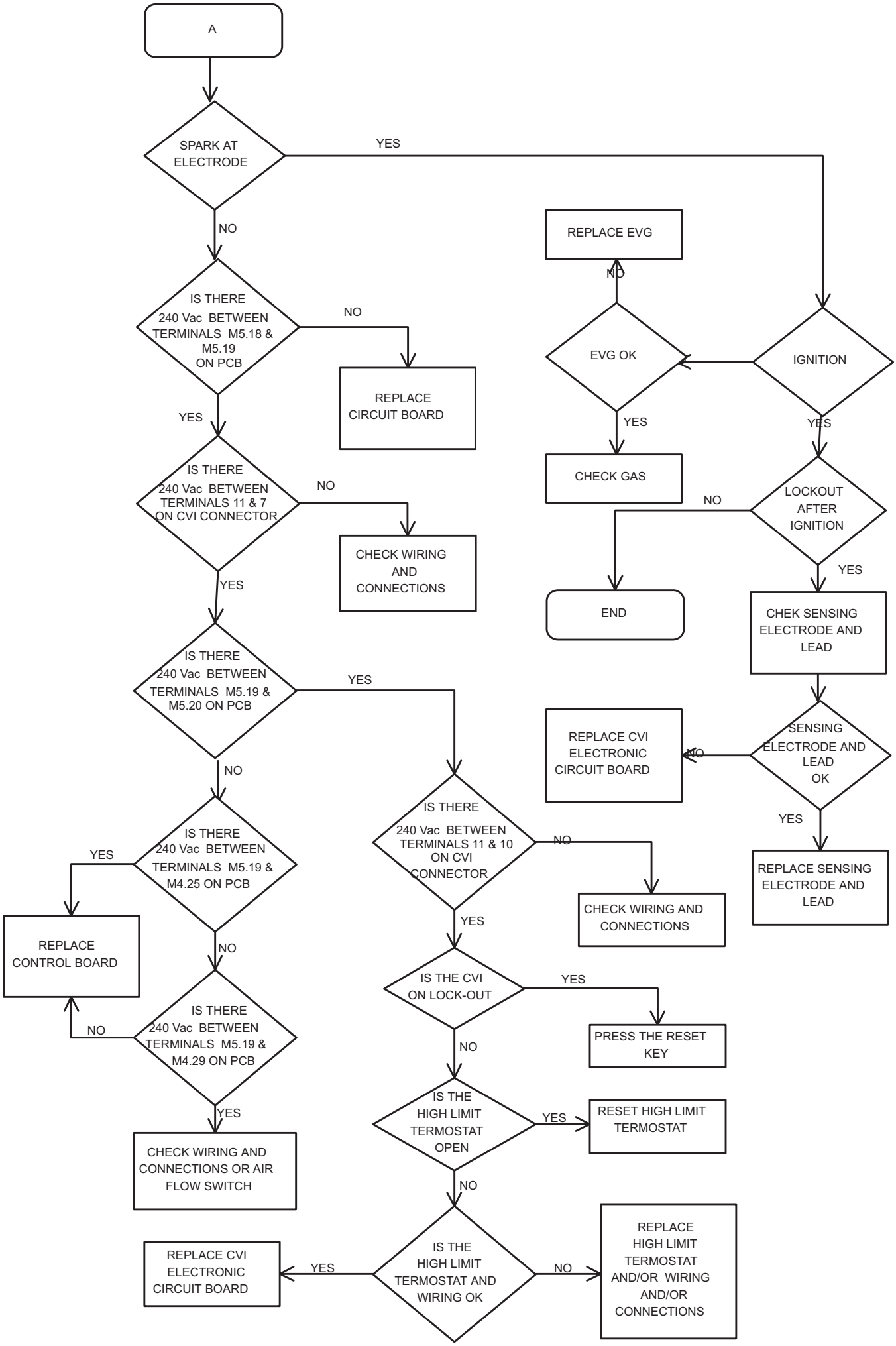
A
SPARK AT ELECTRODE
YES
NO
IS THERE 240 Vac BETWEEN TERMINALS M5.18 & M5.19 ON PCB
NO
REPLACE CIRCUIT BOARD
YES
IS THERE 240 Vac BETWEEN TERMINALS 11 & 7 ON CVI CONNECTOR
NO
CHECK WIRING AND CONNECTIONS
YES
IS THERE 240 Vac BETWEEN TERMINALS M5.19 & M5.20 ON PCB
YES
NO
IS THERE 240 Vac BETWEEN TERMINALS M5.19 & M4.25 ON PCB
YES
REPLACE CONTROL BOARD
NO
IS THERE 240 Vac BETWEEN TERMINALS M5.19 & M4.29 ON PCB
NO
YES
CHECK WIRING AND CONNECTIONS OR AIR FLOW SWITCH
IS THERE 240 Vac BETWEEN TERMINALS 11 & 10 ON CVI CONNECTOR
NO
CHECK WIRING AND CONNECTIONS
YES
IS THE CVI ON LOCK-OUT
YES
PRESS THE RESET KEY
NO
IS THE HIGH LIMIT TERMOSTAT OPEN
YES
RESET HIGH LIMIT TERMOSTAT
NO
IS THE HIGH LIMIT TERMOSTAT AND WIRING OK
YES
REPLACE CVI ELECTRONIC CIRCUIT BOARD
NO
REPLACE HIGH LIMIT TERMOSTAT AND/OR WIRING AND/OR CONNECTIONS
REPLACE EVG
NO
EVG OK
YES
CHECK GAS
IGNITION
YES
LOCKOUT AFTER IGNITION
NO
END
YES
CHEK SENSING ELECTRODE AND LEAD
SENSING ELECTRODE AND LEAD OK
NO
REPLACE CVI ELECTRONIC CIRCUIT BOARD
YES
REPLACE SENSING ELECTRODE AND LEAD

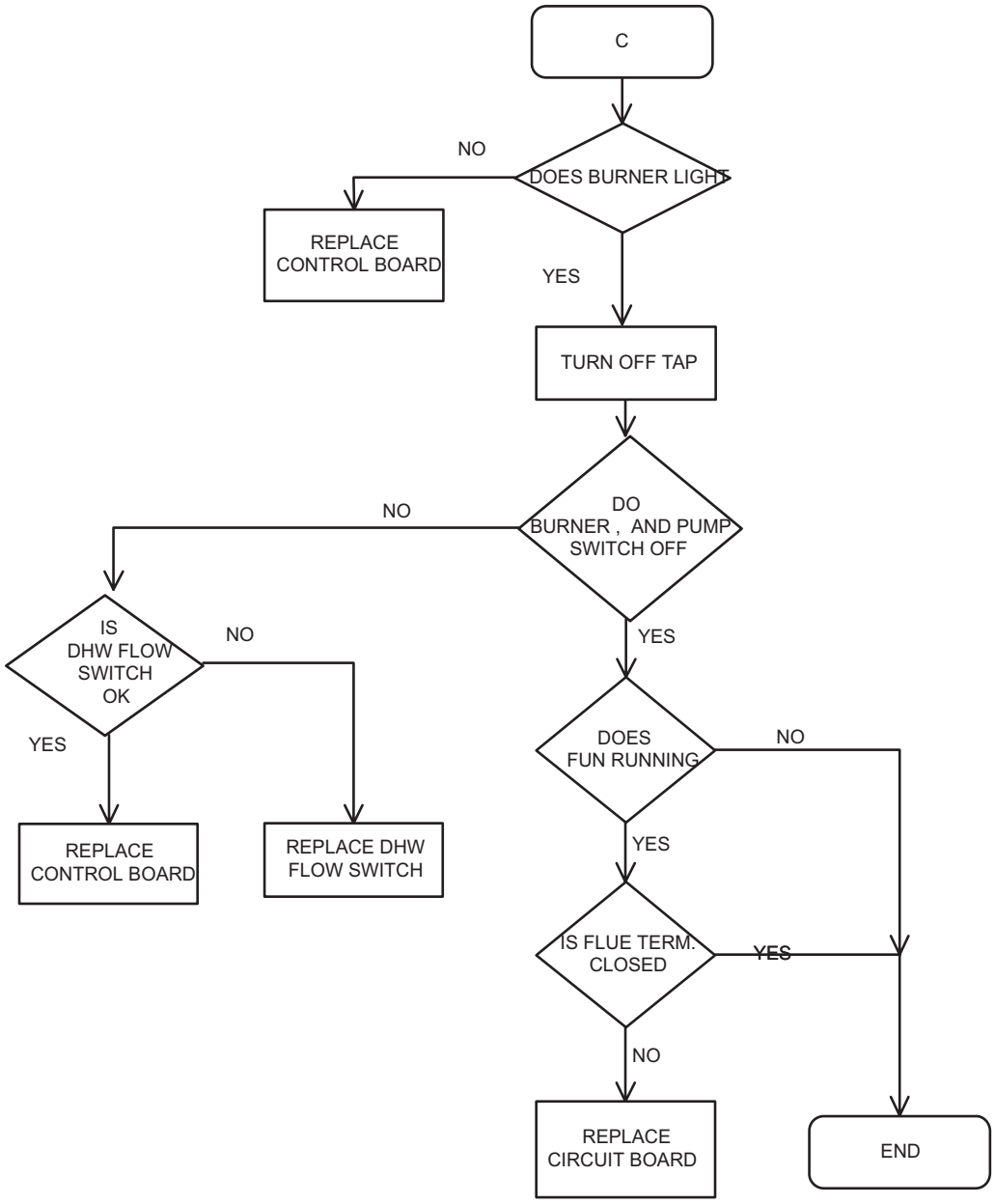
C
DOES BURNER LIGHT
NO
REPLACE CONTROL BOARD
YES
TURN OFF TAP
DO BURNER , AND PUMP SWITCH OFF
NO
IS DHW FLOW SWITCH OK
NO
YES
REPLACE CONTROL BOARD
REPLACE DHW FLOW SWITCH
YES
DOES FUN RUNNING
NO
YES
IS FLUE TERM. CLOSED
YES
NO
REPLACE CIRCUIT BOARD
END

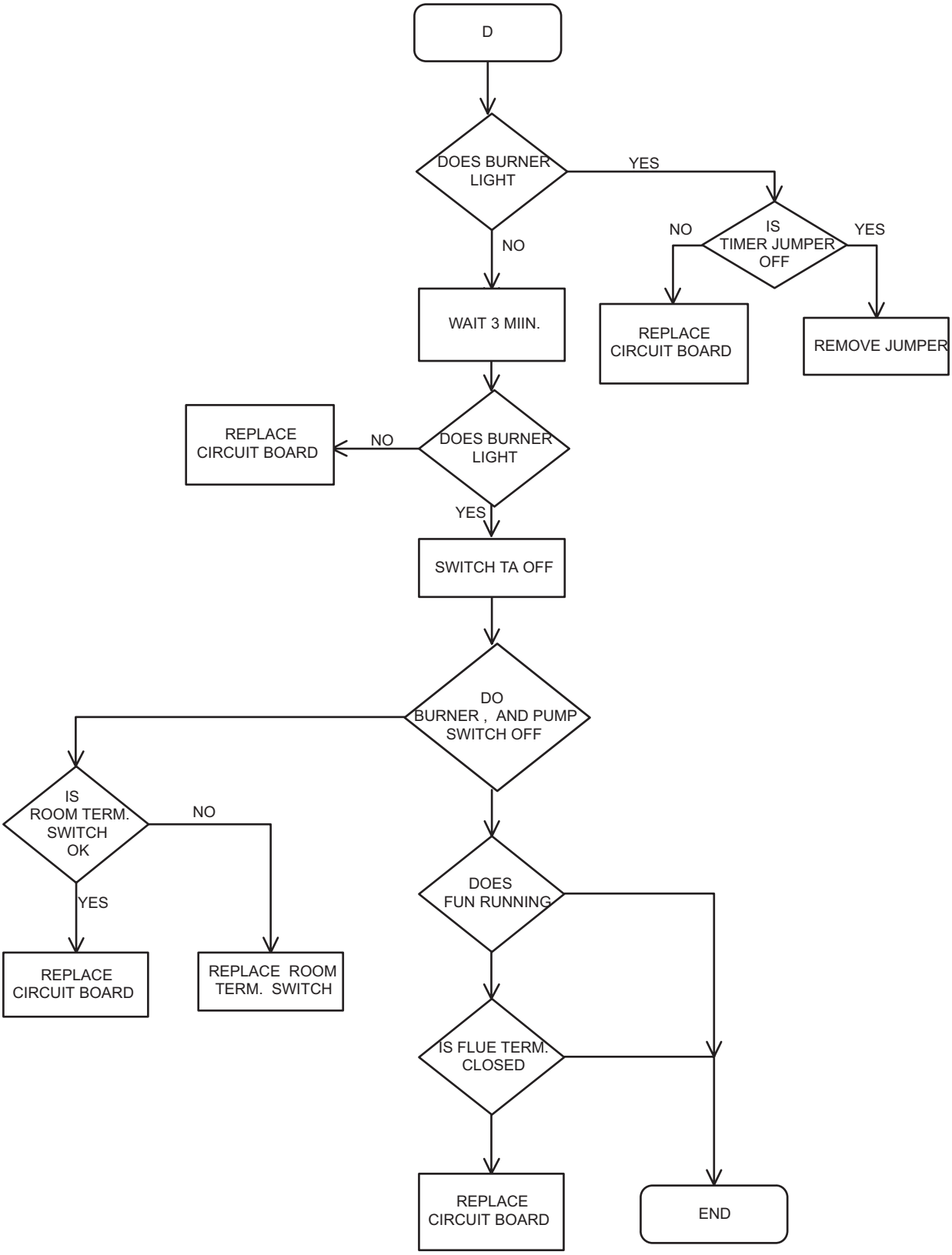
D
DOES BURNER LIGHT
YES
NO
IS TIMER JUMPER OFF
NO
YES
REPLACE CIRCUIT BOARD
REMOVE JUMPER
WAIT 3 MIIN.
DOES BURNER LIGHT
NO
REPLACE CIRCUIT BOARD
YES
SWITCH TA OFF
DO BURNER , AND PUMP SWITCH OFF
IS ROOM TERM. SWITCH OK
NO
YES
REPLACE CIRCUIT BOARD
REPLACE ROOM TERM. SWITCH
DOES FUN RUNNING
IS FLUE TERM. CLOSED
REPLACE CIRCUIT BOARD
END

SECTION 10 APPENDIX

Instructions for **(A)** Fitting Vokera 24 Hour Time Switch (Part No. 201) and Vokera Digital 7 Day Time Switch (Part No. 202)
(B) Wiring to external Time Switches, Room Thermostats and Frost Thermostat.
(C) Wiring for 'S' & 'Y' Plan Installations.

A. Installation of the Vokera time switches (24 Hr and 7Day)

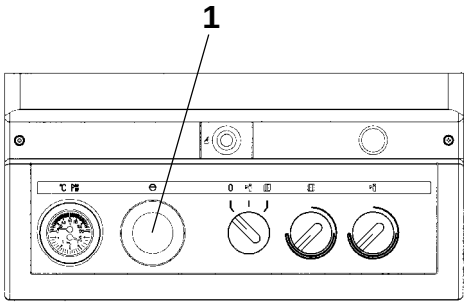

Fig. 1

Remove the clock aperture blanking plate (1) fig.1 by removing the securing screws and pulling the plate out.

Remove the clock from it's box.

Wire the clock as shown in fig. 4.

Insert the clock into the aperture from the back of the control panel, and secure the clock to the front control panel using the four screws provided. (See fig. 2)

Connect the other ends of the wires as detailed below. (fig.3)

White/Red: Connect to terminal marked L.

Blue: Connect to terminal marked N.

Red/Black: Connect to terminal 5.

White: Connect to terminal marked 4, (remove link wire connected between terminals 4 - 5.)

ROOM THERMOSTAT

Remove the loop between terminals 1 & 2 and connect room thermostat as fig 5 or 5a.

FROST THERMOSTAT

Connect to terminals 2 & 3. If a neutral is required use terminal marked N. (terminal 3 is a permanent live)

NO EXTERNAL OR INTERNAL CONTROLS

The loops between terminals 1 & 2 and 4 & 5 remains when no external or internal controls are used.

Fig. 2

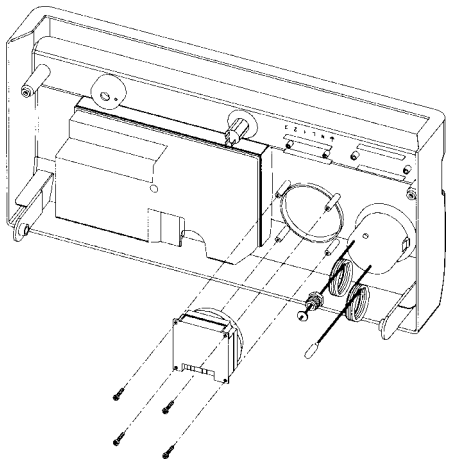

230v ~ Output for Time Clock Motor Supply.

Terminals 4 to 5 are **230v** for control circuits only.

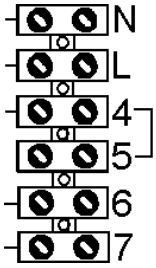

Fig. 3

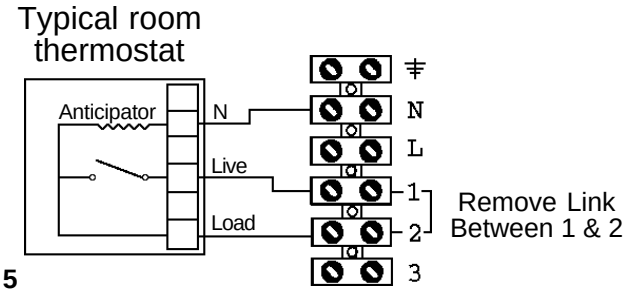

Fig. 5

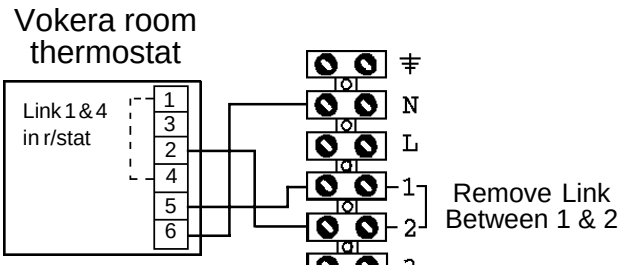

Fig. 5a

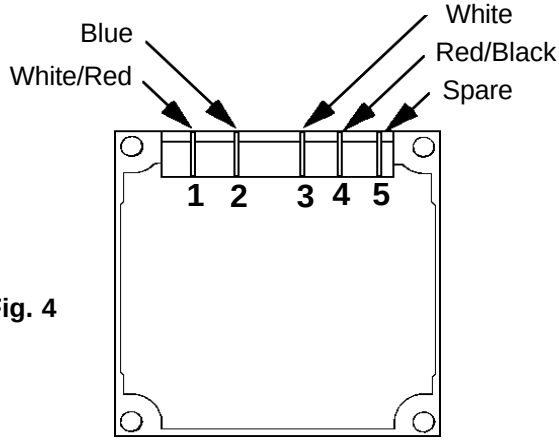

Fig. 4

B. Wiring to External Time Switches and Thermostats.

Earths have been ommitted for clarity

(i) General Schematic Diagram.

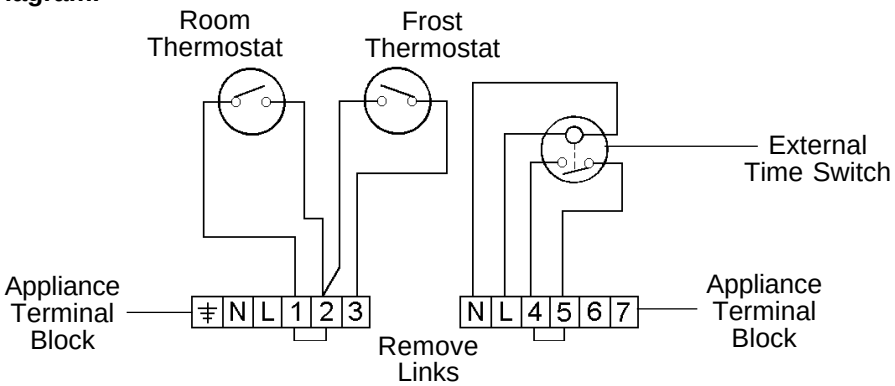

Frost thermostat if required, over rides other controls to bring appliance on in heating mode if space temperature falls below that set on frost stat. (Mode selector must be set at either or .

(ii) ACL Time Switch and Typical Room Thermostat

Earths have been ommitted for clarity

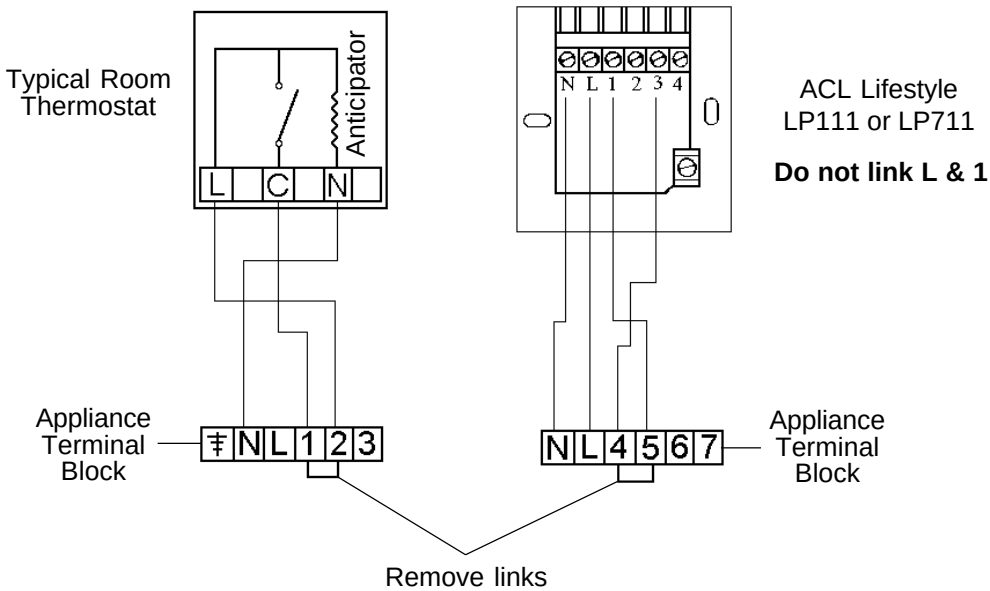

(iii) Randall Time Switch and Vokera Room Thermostat.

Earths have been ommitted for clarity

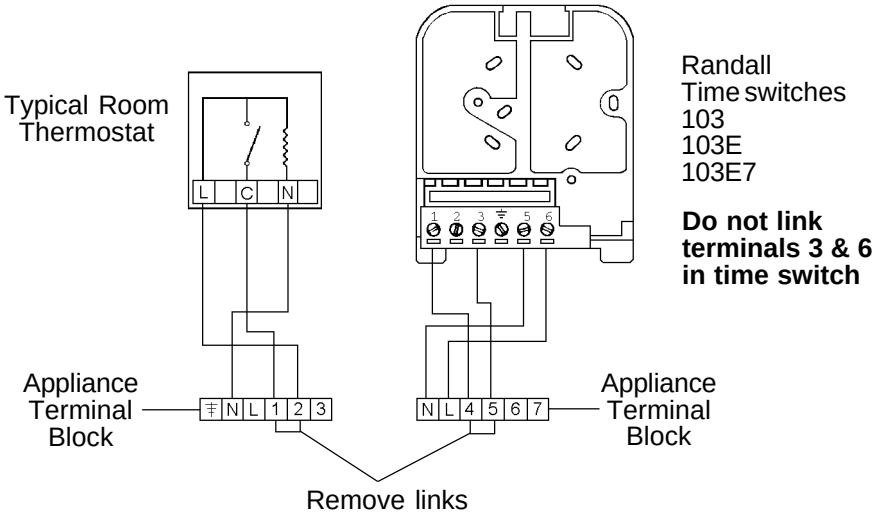

C. Wiring for 'S' Plan Installations.

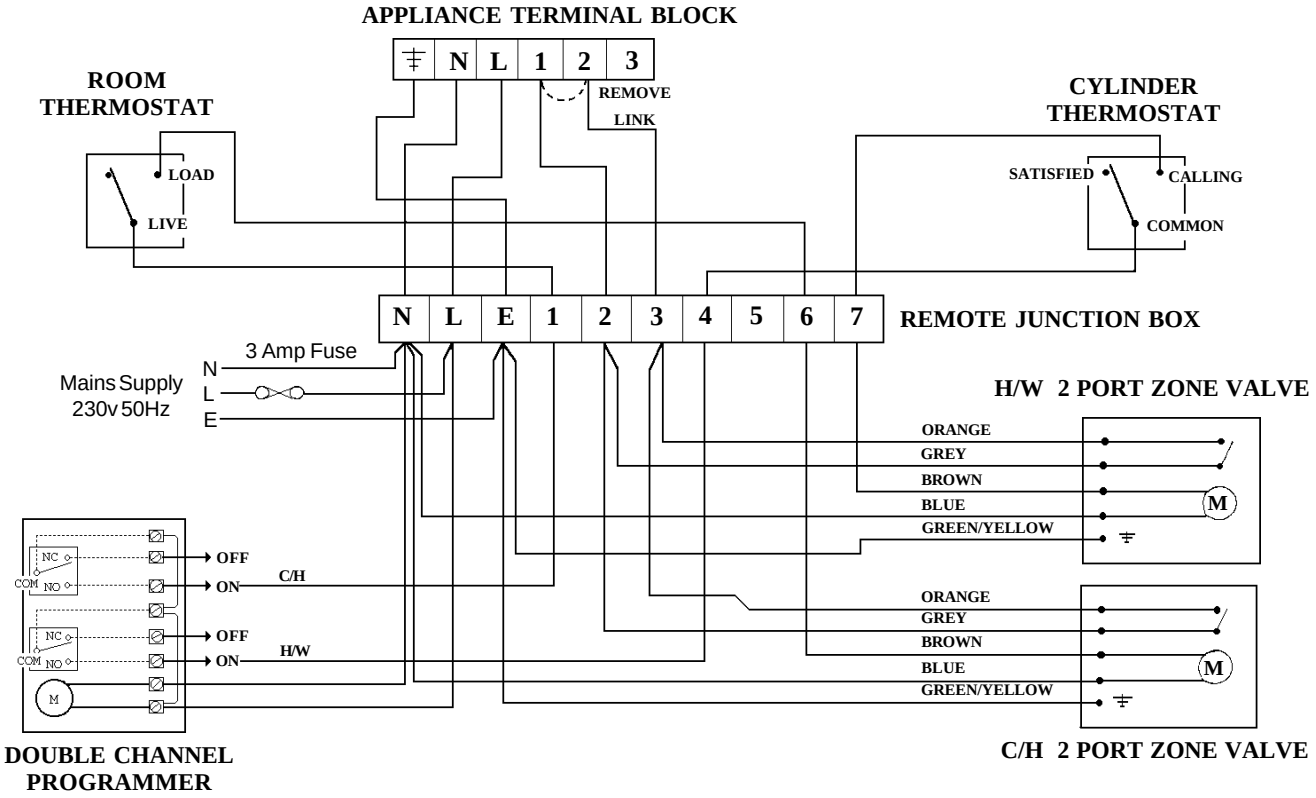

MODE SELECTOR SWITCH MUST BE IN THE POSITION.

Wiring for 'Y' Plan Installations.

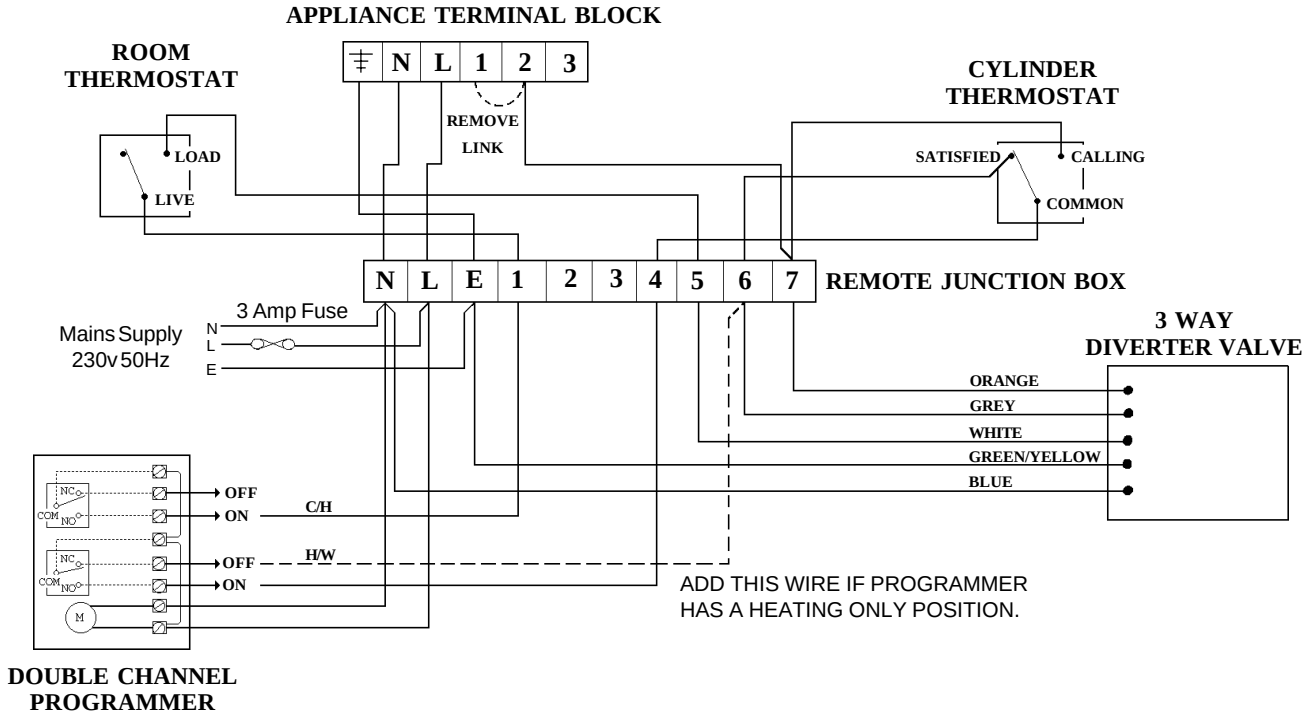

NOTE: WHEN USING A 'Y' PLAN INSTALLATION THE MODE SELECTOR SWITCH WILL BE OVERRIDEN BY THE CONTROL CIRCUIT.

Fig. 36

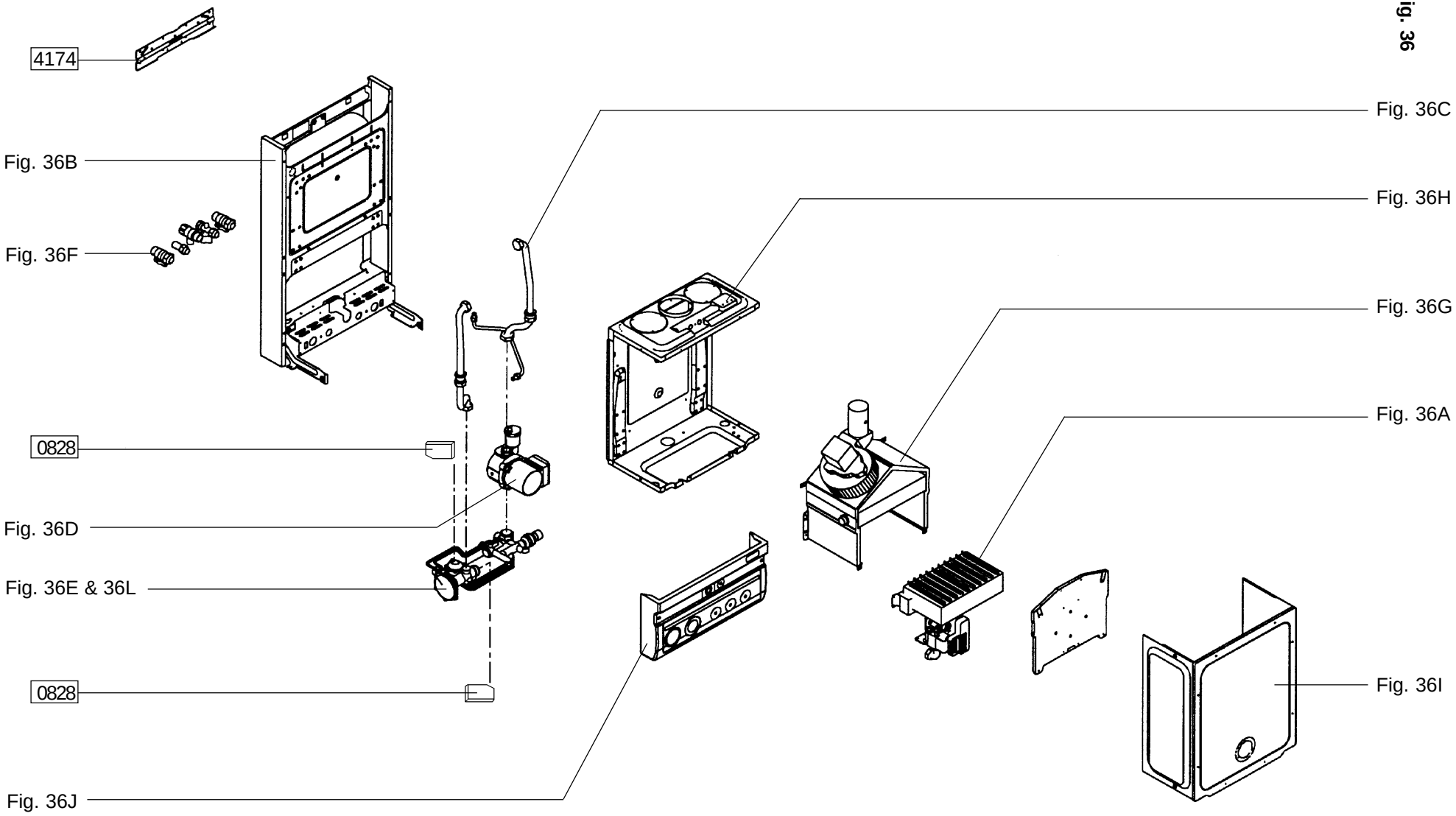
4174
Fig. 36B
Fig. 36F
0828
Fig. 36D
Fig. 36E & 36L
0828
Fig. 36J
Fig. 36C
Fig. 36H
Fig. 36G
Fig. 36A
Fig. 36I

Fig. 36A Gas Assembly

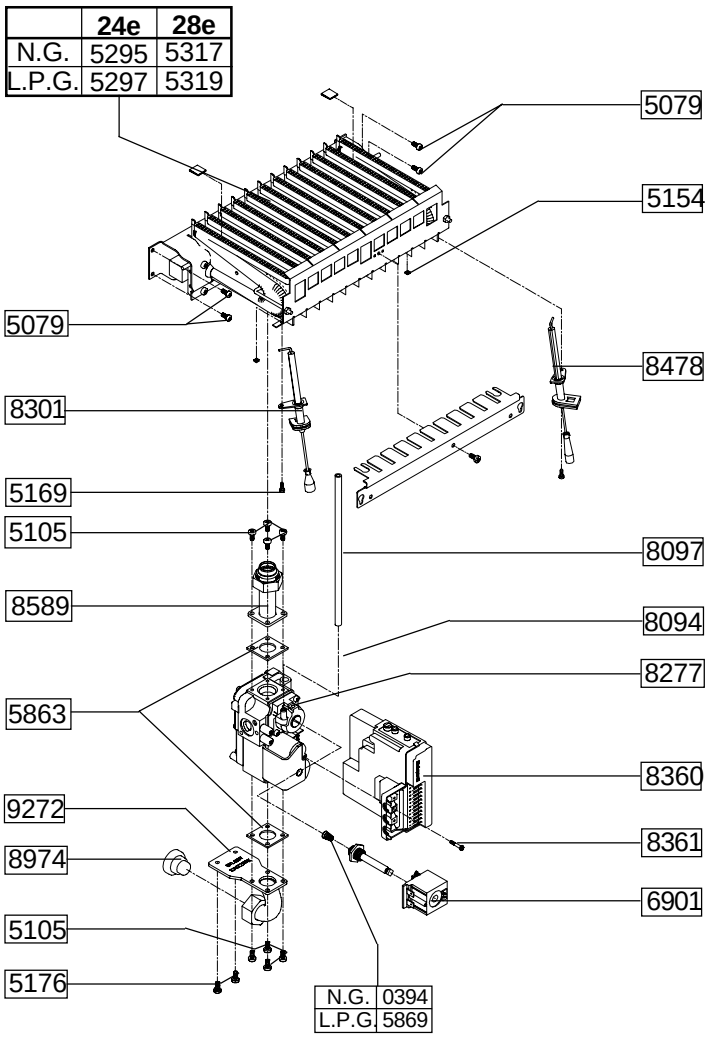

Fig. 36B Main Frame & Expansion Vessel

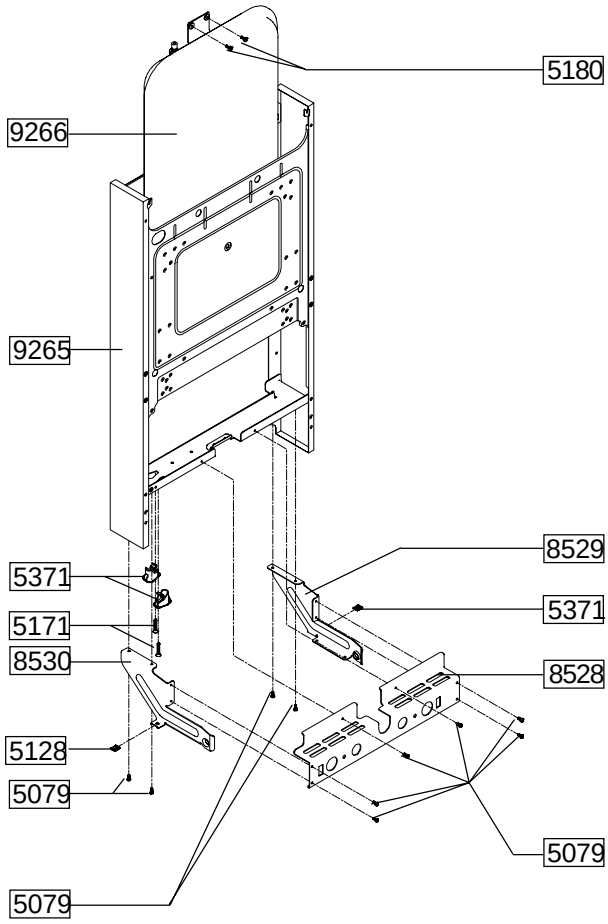

Fig. 36C Connecting Pipes

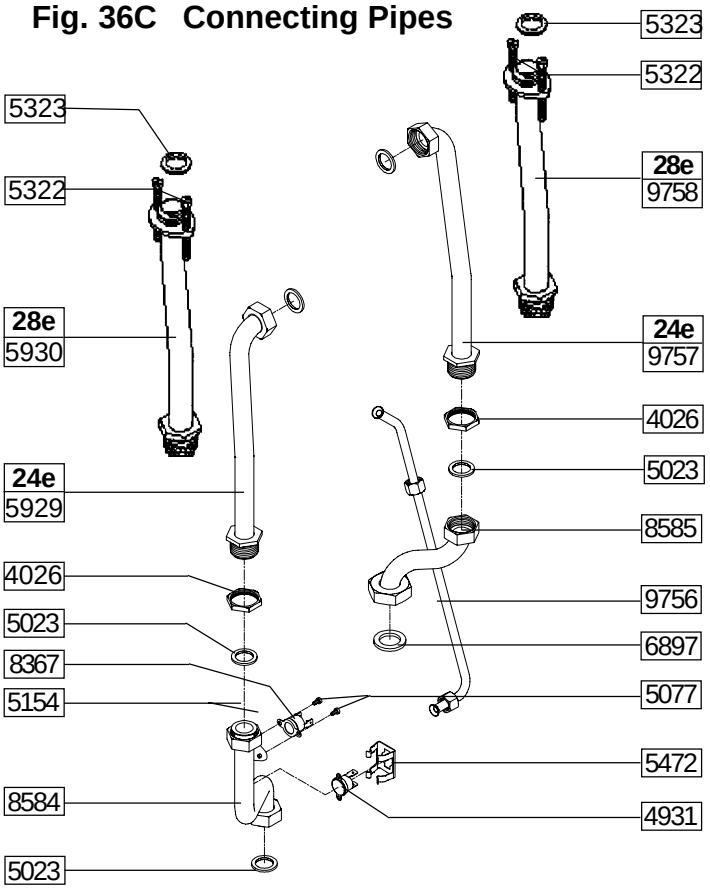

Fig. 36D Circulation Pump Grundfos AO

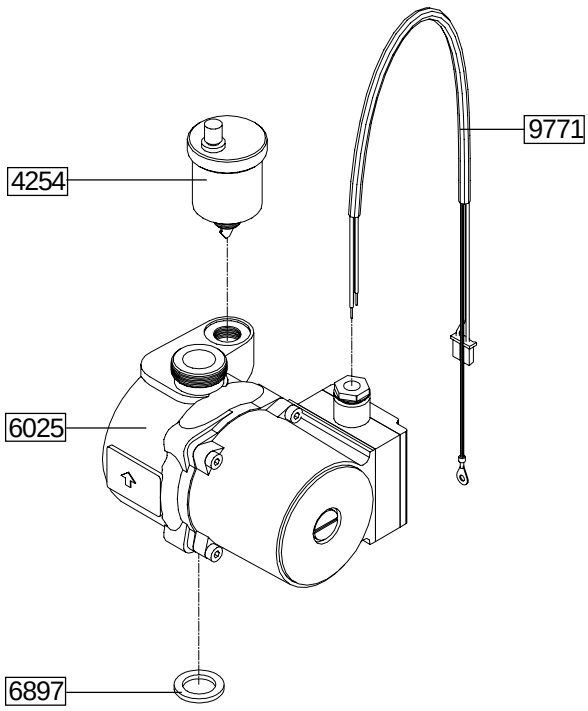

Fig. 36E Hydraulic Assembly

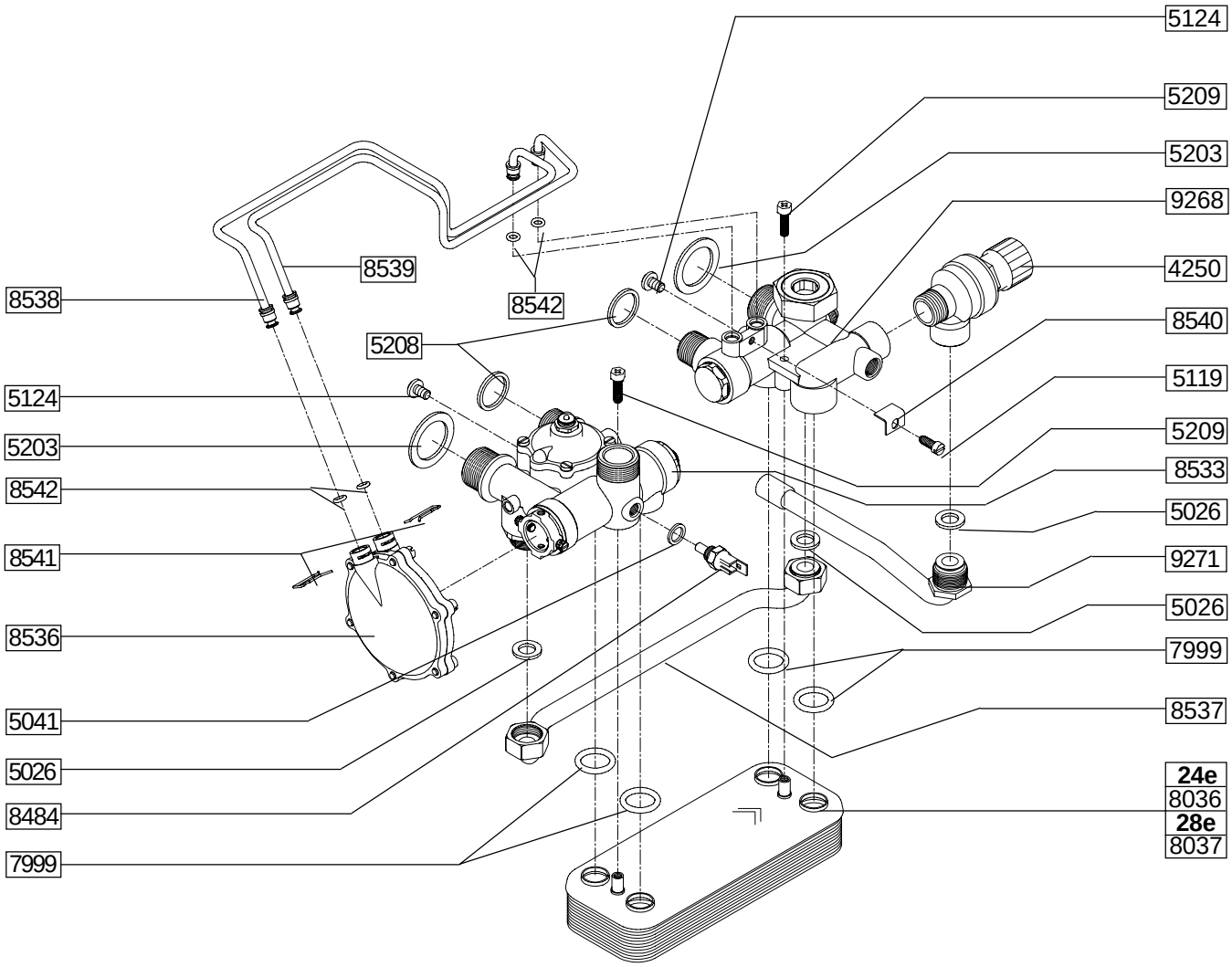

Fig. 36F Valves

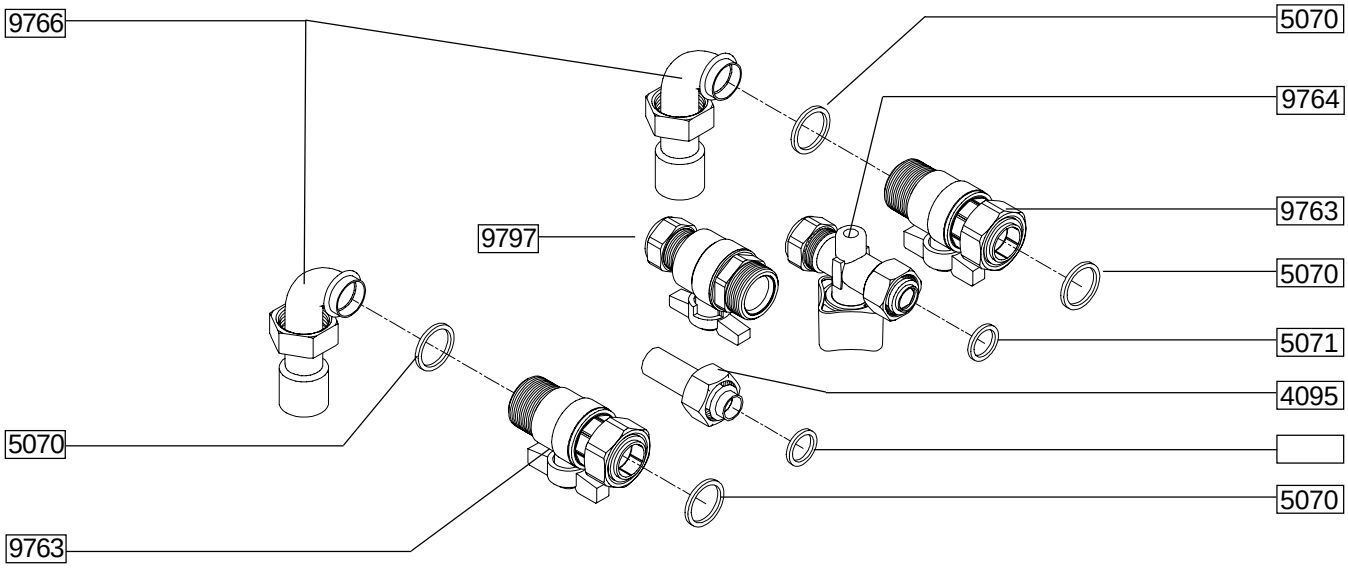

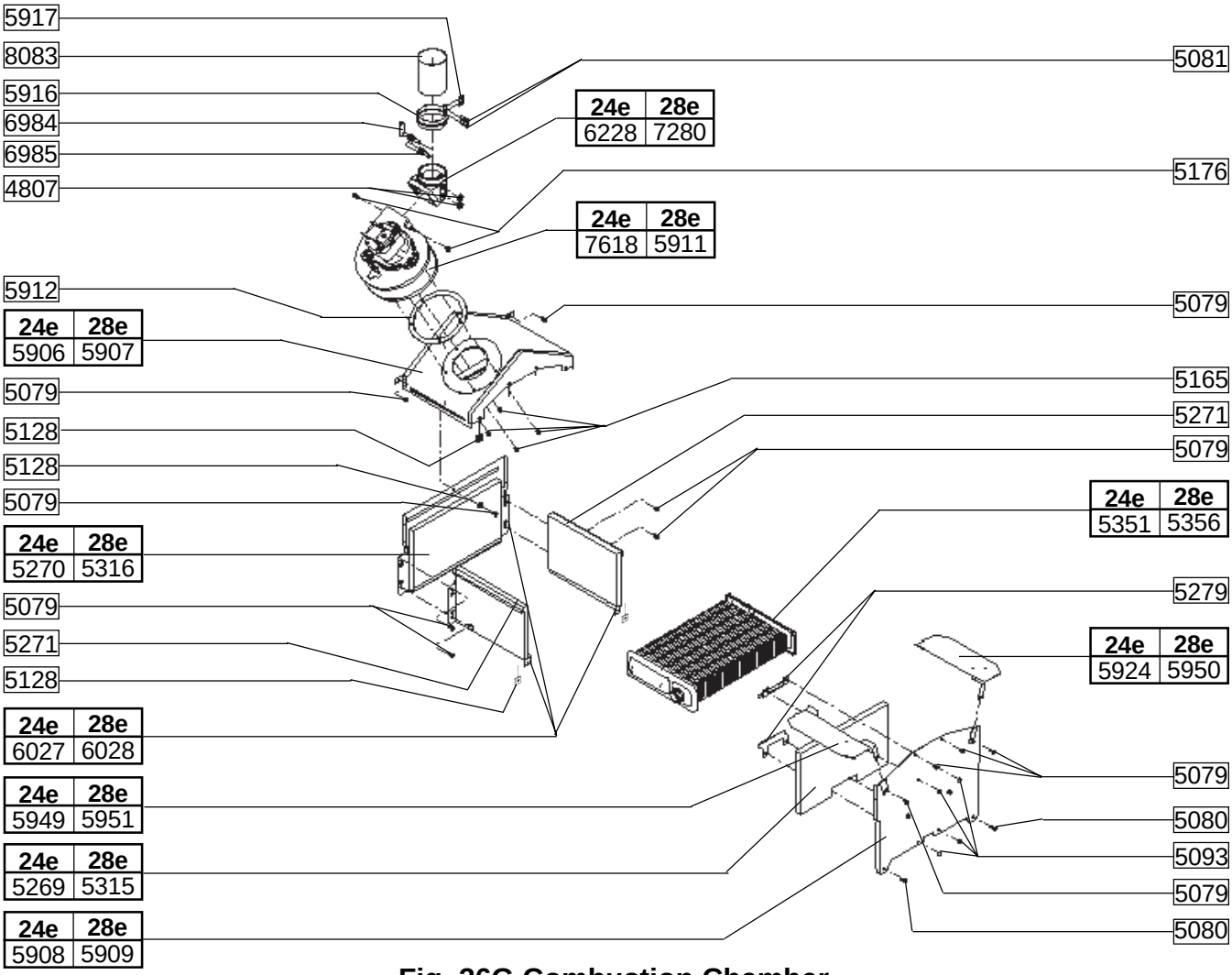

Fig. 36G Combustion Chamber

Fig. 36H Sealed Case

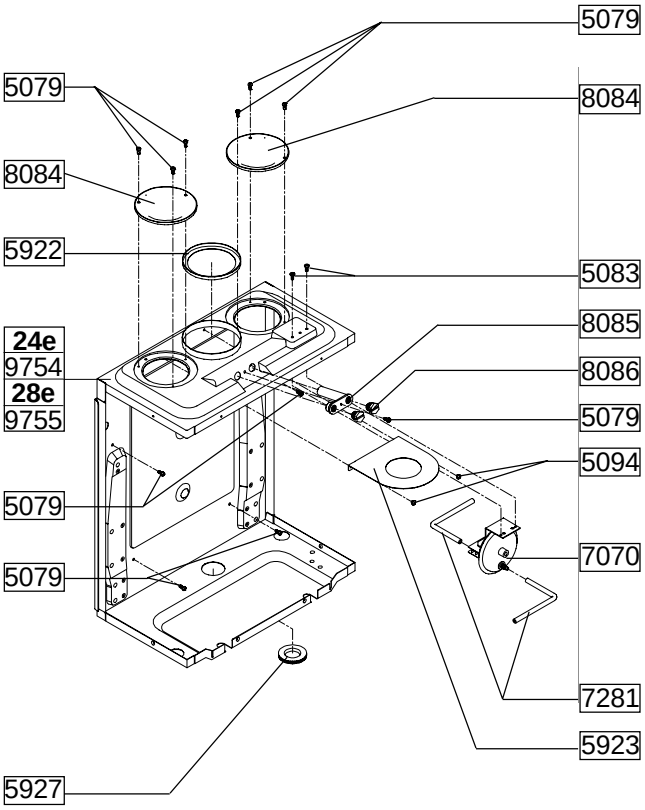

Fig. 36I Cover

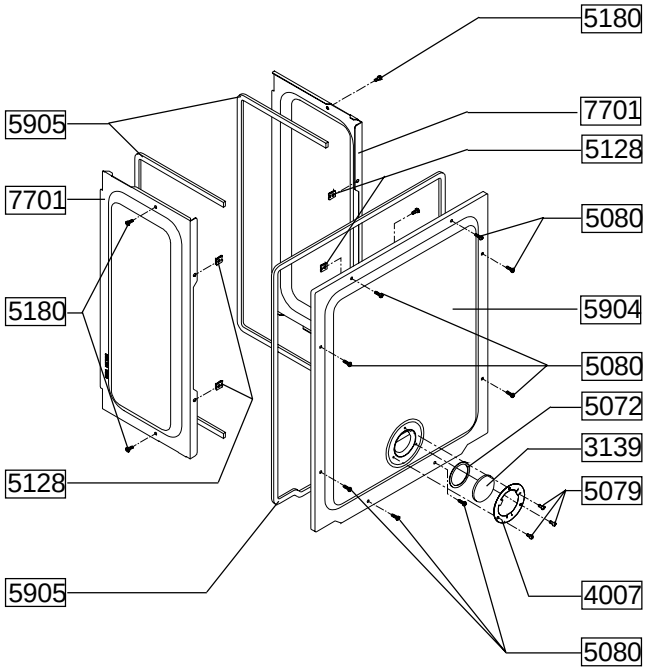

Fig. 36J Front Panel

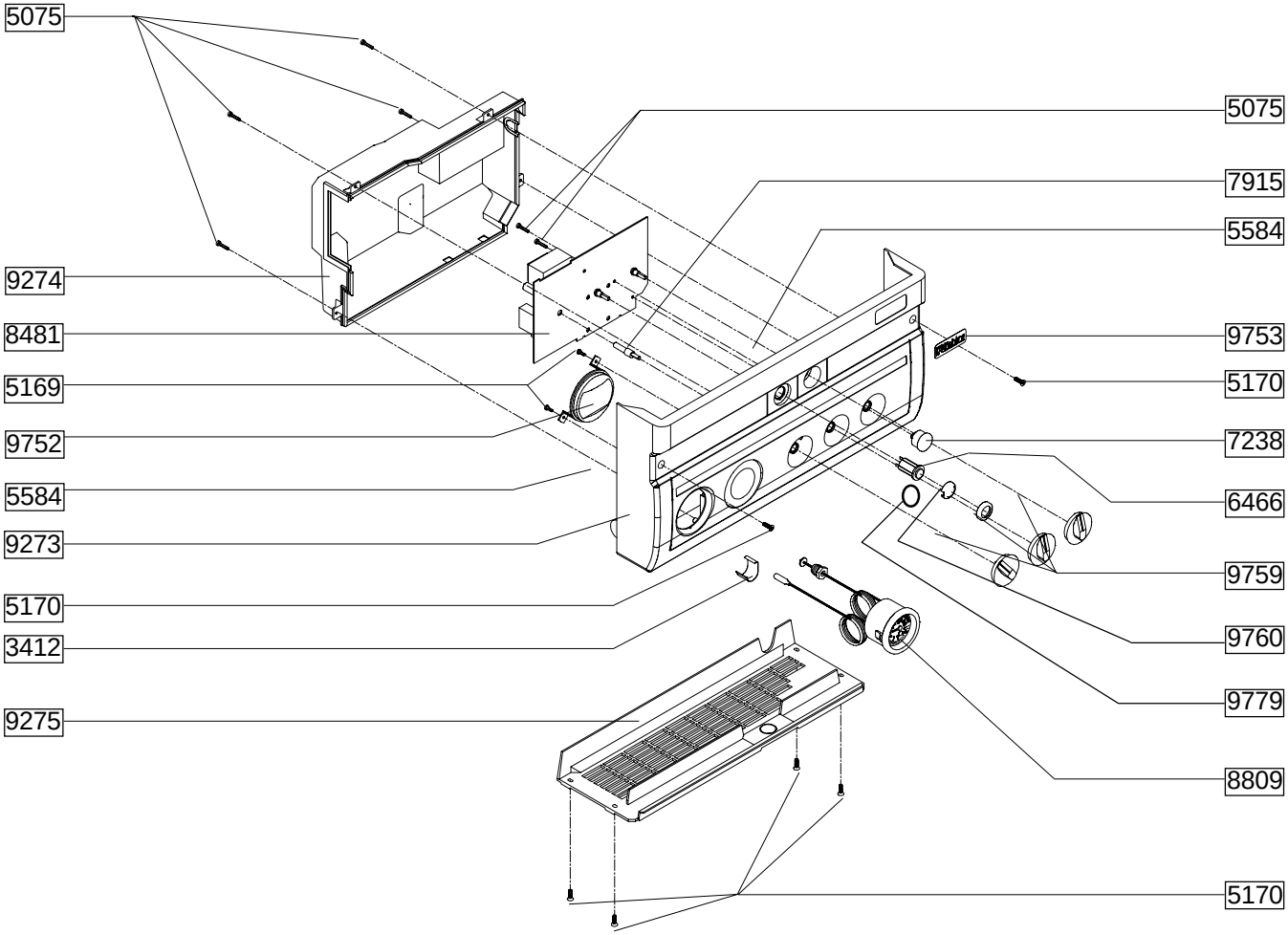

Fig. 36K Outer Casing

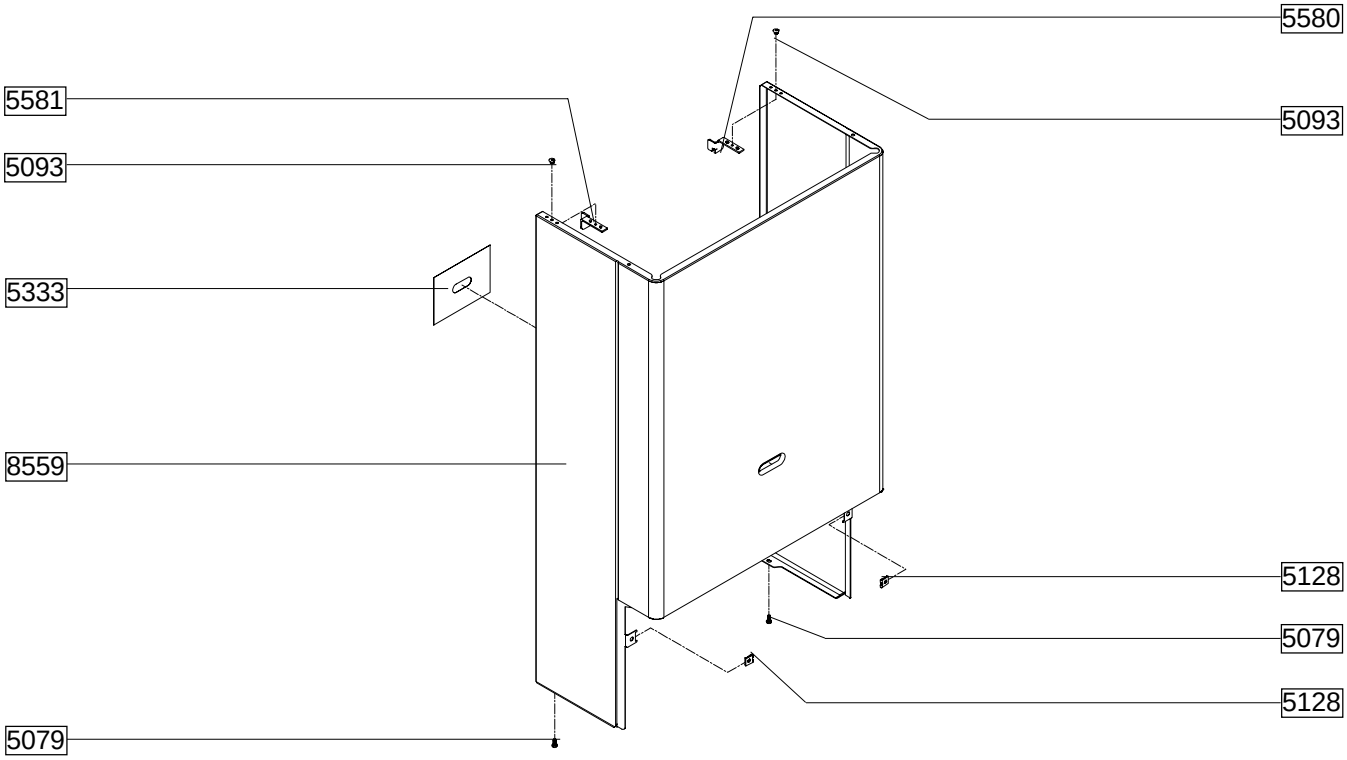

Fig. 36L Hydraulic Sub-assembly

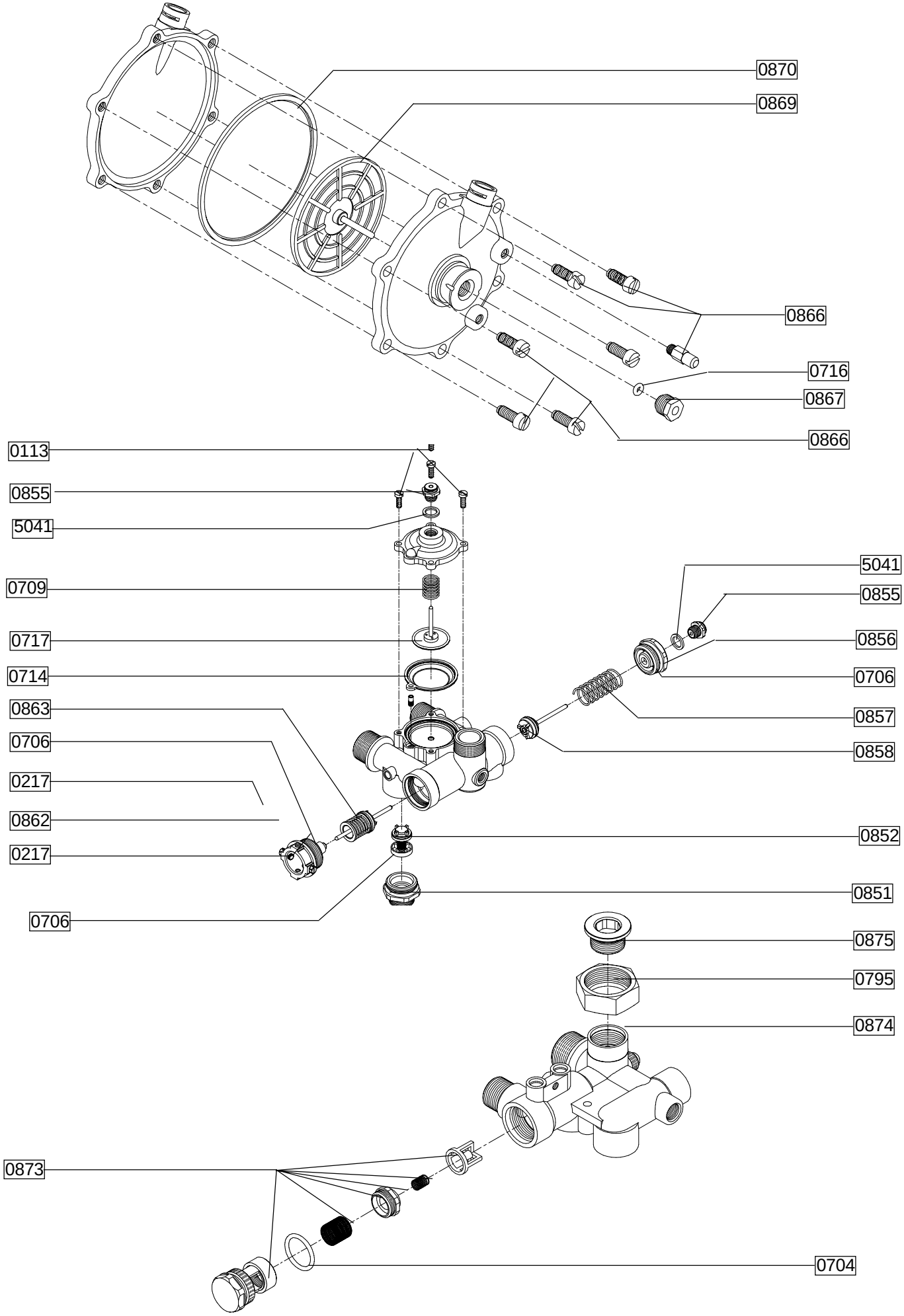

REFER TO FIG. 36

Code	Fig No.	Description
8277	36A	Gas Valve Complete
4254	36D	Auto Air Vent
5351	36G	Main Heat Exchanger (24e)
5356	36G	Main Heat Exchanger (28e)
8478	36A	Spark Electrode
8301	36A	Sense Electrode
6025	36D	Grundfos UPS 15-50 AO Pump
7618	36G	Fan (24e)
5911	36G	Fan (28e)
0714	36L	Flow Diapragm
0870	36L	Domestic Diapragm
7070	36H	Pressure Differential Switch
5298	36A	Main Burner (24e)
5317	36A	Main Burner (28e)
8360	36A	Ignition Control Box
9797	36F	Gas Service Cock
9764	36F	Cold Water Inlet Service Cock (Adjustable)
9266	36B	Expansion Vessel
8484	36E	Thermistor
8809	36J	Combined Pressure & Temperature Gauge
6901	36A	Modulator Coil Complete
8036	36E	Domestic Heat Exchanger (24e)
8037	36E	Domestic Heat Exchanger (28e)
9763	36F	Heating Flow & Return Valves
8367	36C	Safety Thermostat
4931	36C	Fan Overrun thermostat
4250	36E	Safety Valve
0828	36	D.H.W. & Flow Microswitch

Fig. 37

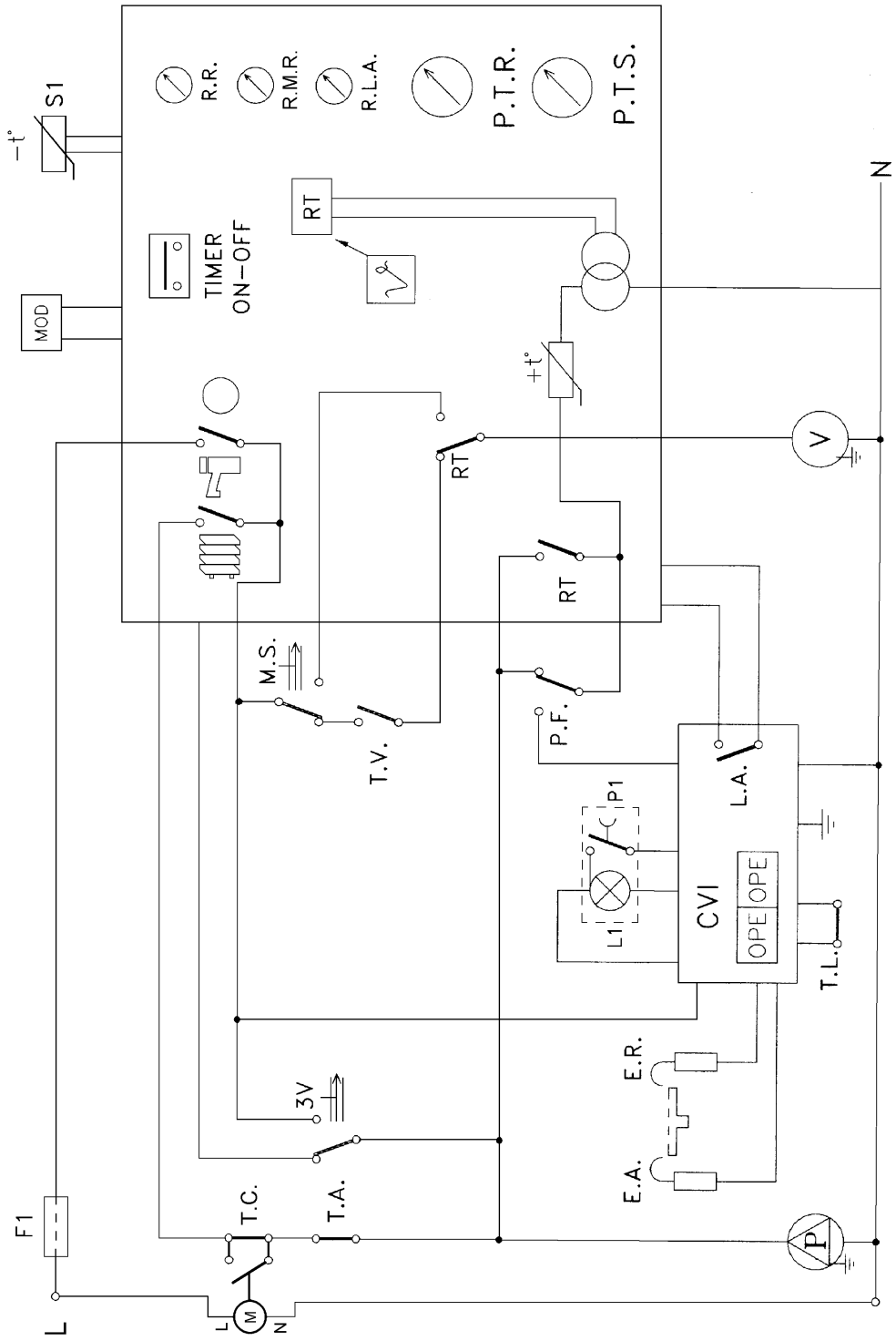

Key

F1 Fuse (2A F)
T.A. Room Thermostat
3V Domestic Microswitch
M.S. Flow Microswitch
T.V. Fan Overrun Thermostat
P.F. Air Pressure Switch
RT Relay
V Fan
P Pump
T.L. High Limit Thermostat
E.R. Sensing Electrode
E.A. Spark Electrode
CVI Combined Gas Valve & Ignition
MOD Modulator Coil
S1 NTC Sensor
R.R. Range Rating Adjustment Screw
RMR C/H Minimum Heat Adjustment Screw
RLA Ignition Soft Light Adjustment Screw
PTR C/H Temperature Control
PTS D/H/W Temperature Control
T.C. Time Clock

Fig. 38

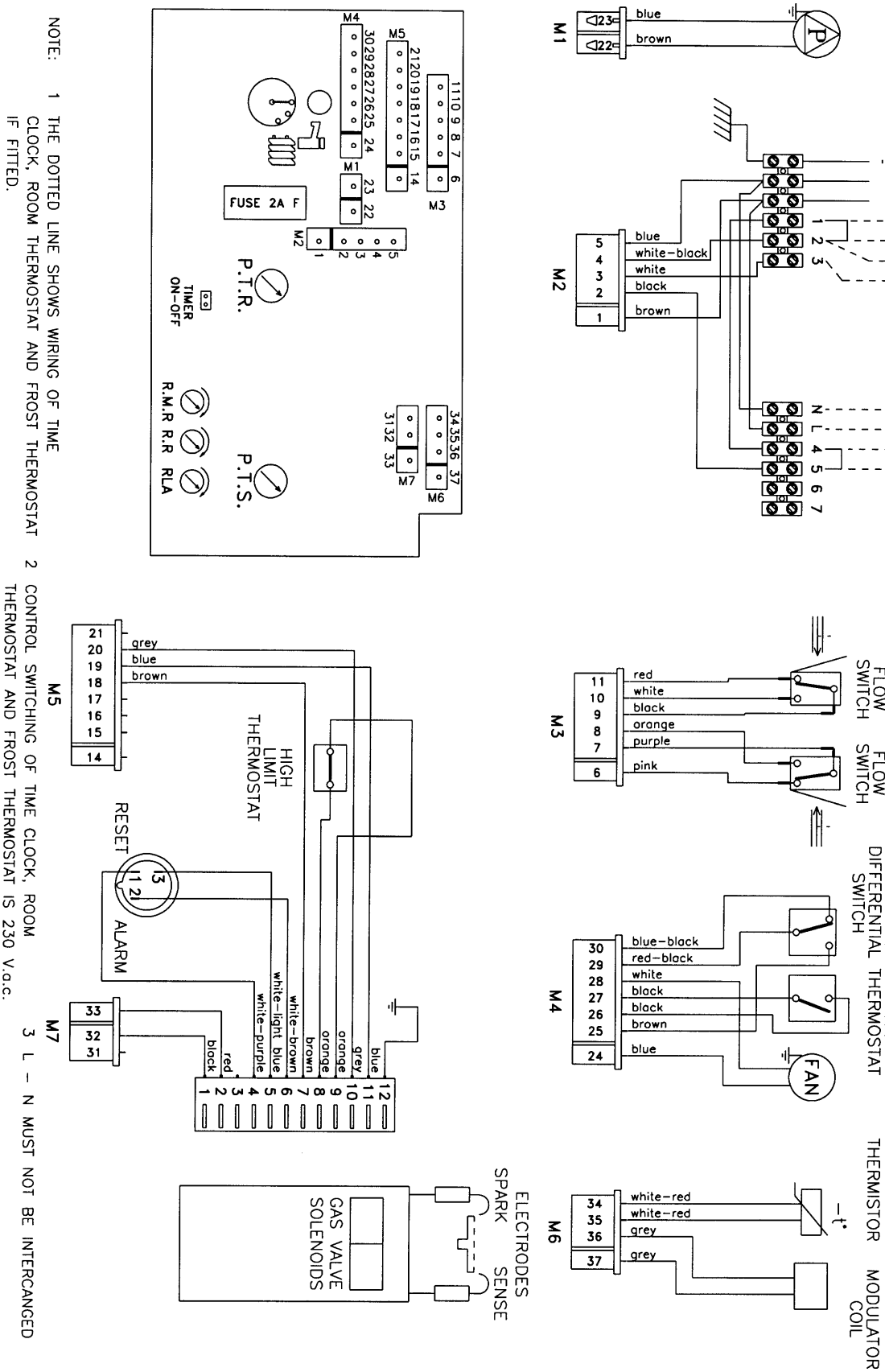

NOTE: 1 THE DOTTED LINE SHOWS WIRING OF TIME CLOCK, ROOM THERMOSTAT AND FROST THERMOSTAT IF FITTED.

2 CONTROL SWITCHING OF TIME CLOCK, ROOM THERMOSTAT AND FROST THERMOSTAT IS 230 V.a.c.

3 L – N MUST NOT BE INTERCANGED

PRELIMINARY ELECTRICAL SYSTEM CHECKS

A. EARTH CONTINUITY CHECK - appliance must be electrically disconnected - meter set on Ω (ohms) x 1 scale and adjust zero if necessary.

a) Test leads from any appliance earth point to earth pin on plug - resistance should be less than 0.1 Ω (ohm).
If the resistance is greater than 0.1 Ω (ohm) check all earth wires for continuity and all contacts clean and tight.
If resistance of earth is still greater than 0.1 Ω (ohm) then this should be reported to your supervisor.

B. SHORT CIRCUIT CHECK - appliance electrically disconnected, all switches ON (including stats) -
a) meter set on Ω (ohms) x 1 scale.
Test leads fom L to N in appliance terminal strip/block - if meter reads 0 then there is a short circuit.

b) meter set on Ω (ohms) x 100 scale
Repeat test with leads from L to E. If meter reads less than ∝ (infinity) there is a fault.

NOTE - Should it be found that the fuse has failed but no fault is indicated - a detailed continuity check (i.e. by disconnecting and checking each component) is required to trace the faulty component. It is possible that a fault could occur as a result of local burning/ arcing but no fault could be found under test. However, a detailed visual inspection should reveal evidence of burning around the fault.

C. POLARITY CHECK
Appliance connected to mains supply and meter set on 300V ac scale. Test at appliance terminal strip:-

a) Test leads from L to N - meter reads approx 230V ac
b) Test leads from L to E (⏚) - meter reads approx 230V ac
c) Test leads from N to E (⏚) - meter reads from O-15V ac*

Thus the terminal marked L is the live terminal. If the low* V ac reading is given on terminals other than N to E (⏚) there is an electrical fault.

Repeat the test at the appliance plug/inlet spur to check the wiring system up to the appliance and rectify any fault. If necessary repeat the test at the supply system socket/spur - if the fault also occurs at this stage then there is a house system fault which requires attention by the ELECTRICITY AUTHORITY. The customer should be warned not to use the appliance until this examination has been carried out.

D. RESISTANCE TO EARTH CHECK
Appliance must be disconnected from mains supply and meter set on Ω (ohms) x 100 scale. **All** switches, including stats, ON - Test leads from L to E - if meter reads other than infinity (∝) there is a fault which should be isolated. A detailed continuity check is required to trace the faulty component.

IMPORTANT - This series of checks are the first electrical checks to be carried out during a fault finding procedure. On completion of the service/fault finding task which has required the breaking and remaking of electrical connections then the checks - A. Earth Continuity. C. Polarity and D. Resistance to Earth - must be repeated.

11.1 Gas Rates (LPG)

	24e	28e
Min. Gas Rate	1.52 litres/h	1.63 litres/h
Max. Gas Rate	4.12 litres/h	4.85 litres/h

11.2 Burner Details (LPG)

	24e	28e
Main Burner	Polidoro NP12	Polidoro NP14
Main Burner Injectors	12 x 0.77	14 x 0.77
Burner Pressure Max. Rate	36.0 mbar	36.0 mbar
Burner Pressure Min. C/H	6.5 mbar	5.5 mbar
Burner Pressure Min. DHW	5.1 mbar	4.3 mbar
Burner Pressure Soft Light	16.7 mbar	16.7 mbar

11.3 RELATED DOCUMENTS

BS 6891		1988	Low pressure installation pipes
BS 6798		1987	Boilers of rated input not exceeding 60kW
BS 5449	Part 1	1990	Forced circulation hot water systems
BS 5546		1990	Installation of gas hot water supplies for domestic purposes (2nd family gases)
BS 5440	Part 1	1990	Flues
BS 5482	Part 1	1994	Domestic Butane & Propane Gas burners in permanent dwellings

11.4 GAS SUPPLY

A gas supply should be connected to the boiler by a competent L.P.G. installer and should be of sufficient size to supply the boiler at its maximum output.

An existing supply should be checked by the installer or L.P.G. supplier to ensure that it can deal with the rate of gas supply required for all the appliances when they are in use at the same time.

11.5 GAS SUPPLY INSTALLATION

11.5.1 Inspect the entire installation including the meter, test for soundness and purge.

11.6 CHECK BURNER PRESSURE

11.6.1 The heat inputs for high and low gas rates are factory set to the maximum values given in section 11.2 but it is necessary to check/adjust this when commissioning the appliance.

11.6.2 The maximum heat input may be reduced by a simple adjustment to suit the system load. This in no way affects the appliance maximum which is always obtained in the domestic hot water mode.

11.6.3 Turn off the main electrical supply. Gain access to the interior as instructed in clause 5.7.2.

11.6.4 Locate the main burner pressure test point fig. 20 and slacken the screw half a turn in an anti clockwise direction. Attach a suitable pressure gauge. Turn on electricity supply and fully open a domestic hot water tap to operate boiler in dhw mode. Adjust hot water control knob to it's maximum setting.

11.6.5 The pressure reading for maximum output should be :

24e
36.0mbar 14.2in. w.g.
(Plus or minus 3.6mbar/1.4in. w.g.)

28e
36.0mbar 14.2in. w.g.
(Plus or minus 3.6mbar/1.4in. w.g.)

If the pressure is wrong it should be adjusted as instructed in clause 8.23. (N.B. Whenever the maximum rate is adjusted check and adjust the minimum rate too).

11.6.6 Reduce the domestic water flow rate to approximately 3-4 litres/min, turn the domestic control knob slowly to minimum the boiler output will reduce to the minimum setting. If low flame cannot be established in this way, turn off the electricity supply, remove the modulator coil retaining clip and slide the modulator coil off the brass rod. Switch on the electricity supply, the boiler will now light at the minimum setting.

11.6.7 When low flame is established the pressure reading should be :
24e
5.1mbar/2.0in. wg
(Plus or minus 0.5mbar/0.2in. wg)
28e
4.3mbar/1.69in. wg
(Plus or minus 0.43mbar/0.16in. wg)
If it is different adjustment should be made in accordance with the instructions in clause 8.23.

11.6.8 If the modulator coil was removed to check the minimum setting, turn off the electricity supply and replace the modulator coil.

11.7 Setting the Maximum Rate for Central Heating (Range Rating)
Refer to fig. 39 to determine the pressure for the heating output required. Turn on the heating with the control knob set at maximum, wait for the burner to reach main flame. Remove the printed circuit board cover by releasing the retaining screws.

Using a small screwdriver to adjust the potentiometer fig. 21 until the required pressure is indicated on the gauge. Once this pressure has been fixed it should be indelibly recorded on the label provided and affixed next to the data badge. This is to ensure that the burner can be reset when any service operation involves alteration of burner settings.

11.8 Setting the Minimum Rate for Central Heating
Turn the central heating thermostat to the minimum setting and wait for the burner to modulate down to the minimum rate.

The gas pressure should now be:

24e

6.5 mbar / 2.55 in w.g.
plus or minus 0.65 mbar / 0.25 in w.g.

28e

5.5 mbar / 2.16 in w.g.
plus or minus 0.55 mbar / 0.21 in w.g.

If the reading is incorrect it should be adjusted as follows:

With the boiler still in central heating mode and the burner at the minimum rate, using a small screwdriver turn the left hand potentiometer fig. 35 clockwise to increase & anti-clockwise to decrease the C/H minimum gas pressure.

Fig. 39

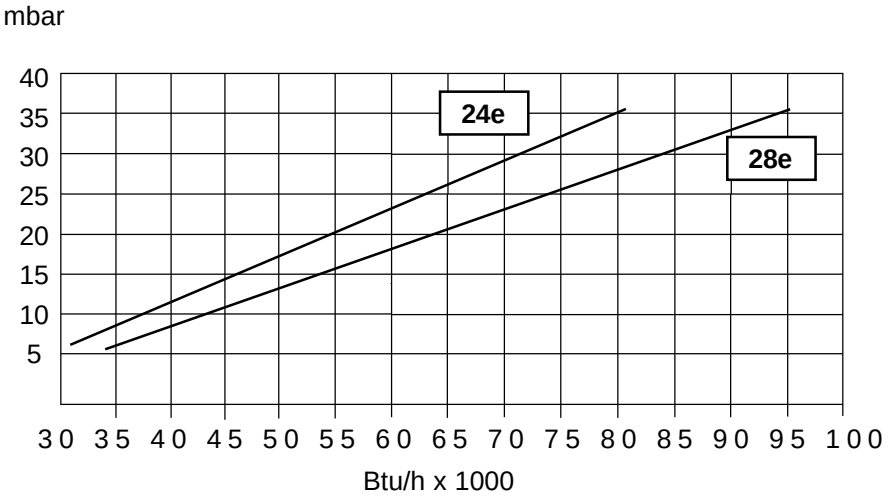

PUTTING THE ACCENT ON QUALITY

Cod. 10022256 - 19/01 - Ed. 1