Vokèra

Mynute

10e - 14e - 20e

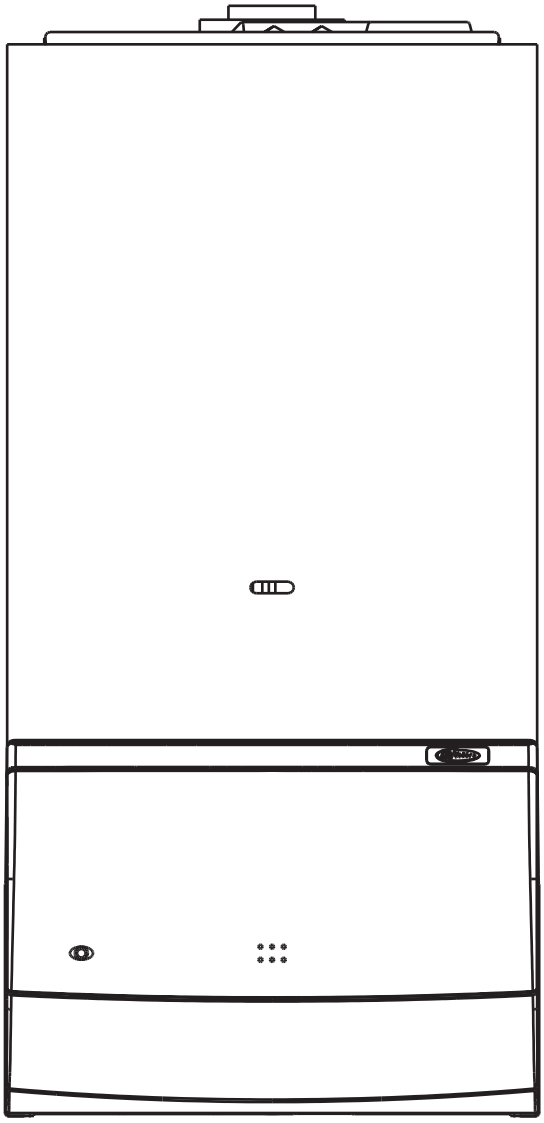

Installation & Servicing Instructions

CE

THESE INSTRUCTIONS TO BE RETAINED BY USER

spares & parts online
IBASIS.co.uk©

Contents

Design principles and operating sequence		Page
1.1	principle components	2
1.2	mode of operation	2
1.3	safety devices	2

Technical data		Page
2.1	performance	3
2.2	gas pressure	3
2.3	expansion vessel	3
2.4	dimensions	3
2.5	clearances	3
2.6	connections	3
2.7	electrical	3
2.8	flue details	3
2.9	efficiency	3
2.10	pump duty	4

General requirements		Page
3.1	related documents	5
3.2	location of appliance	5
3.3	gas supply	5
3.4	flue system	5
3.5	air supply	6
3.6	water circulation	6
3.6.1	pipework	6
3.6.2	automatic bypass	6
3.6.3	drain cocks	6
3.6.4	air release points	6
3.6.5	expansion vassel	6
3.6.6	filling point	6
3.6.7	low pressure sealed system	7
3.6.8	frequent filling	7
3.7	electrical supply	7
3.8	mounting on a combustible surface	7
3.9	timber framed building	7

Installation		Page
4.1	delivery	8
4.2	contents	8
4.3	unpacking	8
4.4	preparation for mounting the appliance	8
4.4.1	important	8
4.5	fitting the flue	8
4.5.1	concentric horizontal flue	8
4.5.2	concentric vertical flue	10
4.5.3	twin flue system	11
4.5.3.1	installation of twin adaptor kit	11
4.5.3.2	installation of condensate drain kit	12
4.5.3.3	horizontal termination	12
4.5.3.4	vertical termination	12
4.6	connecting the gas and water	14
4.6.1	gas	14
4.6.2	flow & return	14
4.6.3	safety valve	14
4.7	electrical connections	14
4.7.1	casing removal	14
4.7.2	appliance terminal block	14
4.7.3	connecting the mains (230 V) input	15

Commissioning		Page
5.1	gas supply installation	16
5.2	the heating system	16
5.3	initial filling of the system	16
5.4	initial flushing	16
5.5	pre-operation checks	16
5.6	initial lighting	16
5.7	checking burner pressures	16
5.8	final flushing of the heating system	16
5.9	setting the boiler operating temperature	17
5.10	setting the system design pressure	17
5.11	regulating the central heating system	17
5.12	final checks	17
5.13	Instructing the user	17

Servicing instructions		Page
6.1	general	18
6.2	routine annual servicing	18
6.3	replacement of components	18
6.4	component removal procedure	18
6.5	pump head	18
6.6	safety valve	18
6.7	automatic air release valve	18
6.8	water pressure switch	19
6.9	pressure gauge	19
6.10	NTC thermistors	19
6.11	high limit thermostat	19
6.12	PCB	19
6.13	gas valve	19
6.14	integral time switch	19
6.15	burner, injectors, and spark electrode	20
6.16	flue fan	20
6.17	heat exchanger	20
6.18	air pressure switch	21
6.19	expansion vessel	21
6.19.1	expansion vessel (removal)	21

Checks, adjustments, and fault finding		Page
7.1	checking appliance operation	22
7.2	appliance mode of operation	22
7.3	checking burner pressure	22
7.4	combustion analysis test	22
7.5	checking the expansion vessel	22
7.6	external faults	23
7.6.1	installation faults	23
7.7	electrical checks	23
7.7.2	short circuit check	23
7.7.4	reversed polarity or supply fault	23
7.7.5	resistance to earth check	22

Wiring diagrams		Page
8.1	'Y' plan using an external programmer	26
8.2	'S' plan using an external programmer	26
8.3	'Y' plan with Vokera twin channel programmer	27
8.4	'S' plan with Vokera twin channel programmer	27
8.5	installation of Vokera time clock	28
8.6	installation of Vokera twin channel programmer	28
	functional diagram	29-30

Exploded diagrams	Page
Table 1	31
Table 2	32
Table 3	33
Table 4	34
Table 1	35
Table 2	36
Table 3	37
Table 4	38

L.P.G. instructions		Page
10.1	technical data	39
10.2	related documents	39
10.3	gas supply	39
10.4	gas supply installation	39
10.5	burner pressures	39

INTRODUCTION

The Vokera 10, 14, and 20e Mynutes are central heating boilers, which – by design – incorporate electronic ignition, circulating pump, expansion vessel, safety valve, pressure gauge, and automatic by-pass.

They are produced as room sealed, category II2H3+ appliances, suitable for wall mounting applications only. They are provided with a fan powered flue outlet with an annular co-axial combustion air intake that can be rotated – horizontally – through 360 degrees for various horizontal or vertical applications.
The Mynute range can also be used with the Vokera twin flue system.

These appliances are designed for use with sealed systems only; consequently they are not intended for use on open vented systems.

The provision of stored hot water is possible by the addition of an indirect cylinder.

A range rating facility is incorporated in the appliance.

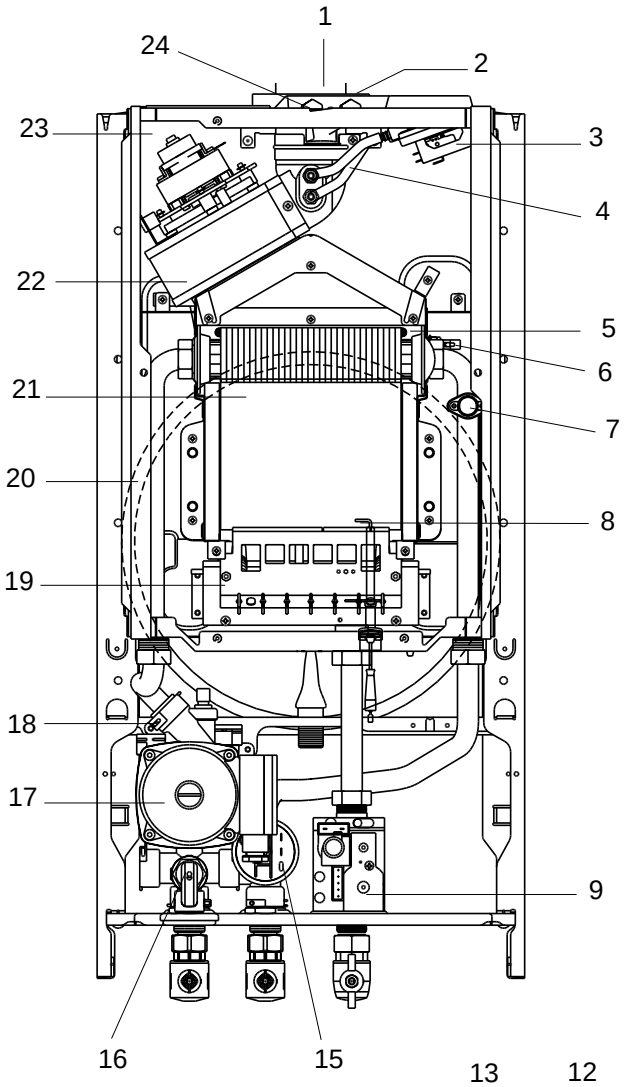

Fig.1 General Layout

1 Flue outlet
2 Air intake
3 Pressure differential switch
4 Silicone tubes (pressure diff. switch)
5 Heat exchanger
6 NTC thermistor
7 High limit thermostat
8 Spark/sensing electrode
9 Gas valve
10 Clock aperture
11 Pressure gauge
12 Thermostat
13 Mode switch
14 Warning led
15 Water pressure switch
16 Safety valve
17 Pump
18 Automatic air vent
19 Burner
20 Expansion vessel
21 Combustion chamber
22 Fan
23 Air chamber
24 Flue gas analysis test point

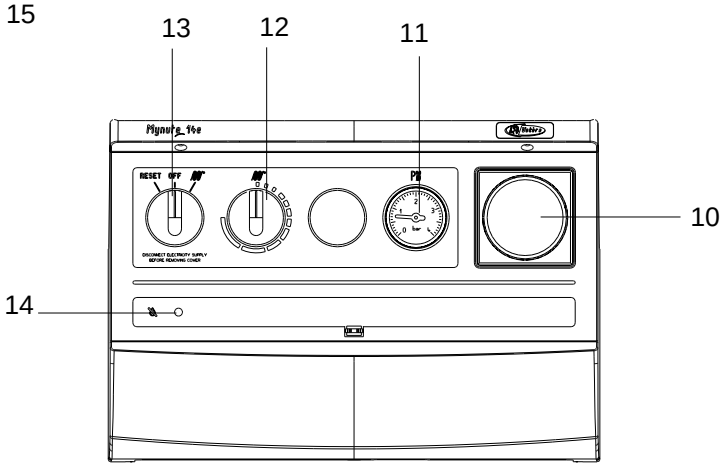

Fig. 1

SECTION 1: DESIGN PRINCIPLES AND OPERATING SEQUENCE

1.1 PRINCIPLE COMPONENTS

- A fully integrated electronic control board featuring mode switch, temperature control, electronic ignition and flame supervision, anti-cycle control, pump over-run, and appliance fault indicator.
- Low water content copper heat exchanger.
- Integral pump
- Fan
- Expansion vessel
- Differential air pressure switch
- Water pressure switch
- Two-stage gas valve
- Pressure gauge
- Safety valve

1.2 MODE OF OPERATION

When there is a request for heat and/or hot water via the programmer/time clock and/or any external control, the pump and fan are started, the fan proves the differential air pressure switch which in-turn allows an ignition sequence to begin.

Ignition is sensed by the electronic circuitry to ensure flame stability at the burner. Once successful ignition has been achieved, the electronic circuitry allows full gas rate through the appliance.

When the appliance reaches the desired temperature the burner will shut down and the boiler will perform a three-minute anti-cycle (timer delay).

When the request for heat and/or hot water has been satisfied the appliance pump will continue to circulate for a period of 30 seconds to dissipate any residual heat within the appliance.

1.3 SAFETY DEVICES

When the appliance is in use, safe operation is ensured by:

- A water pressure switch that monitors system water pressure and will de-activate the pump, fan, and burner should the system water pressure drop below the rated tolerance.
- A high limit thermostat that over-rides the temperature control circuit to prevent or interrupt the operation of the burner.
- A differential air pressure switch that checks the operation of the fan and flue thereby allowing safe operation of the burner.
- A safety valve which releases excess pressure from the primary circuit.

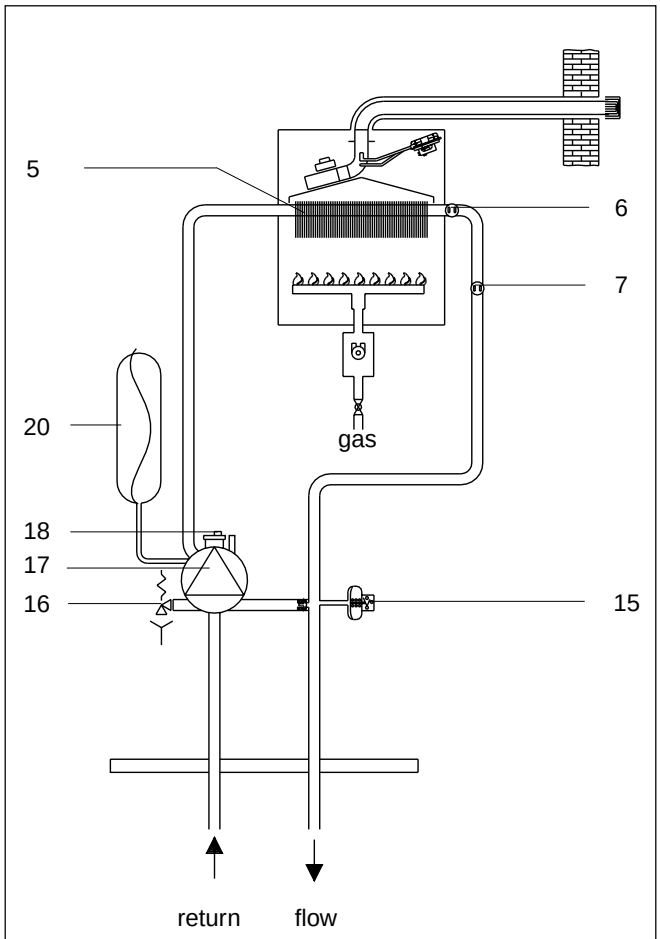

Fig. 2

SECTION 2: TECHNICAL DATA

2.1 PERFORMANCE

	10e	14e	20e
Heat input	12.75 kW	17.1 kW	24.2 kW
Heat output (max)	10.35 kW	14.2 kW	19.8 kW
Heat output (min)	5.06 kW	7.4 kW	14.0 kW
Minimum working pressure	0.5 bar	0.5 bar	0.5 bar
Maximum working pressure	3.0 bar	3.0 bar	3.0 bar
Minimum flow rate	350 l/hour	350 l/hour	350 l/hour

2.2 GAS PRESSURE

	10e	14e	20e
Inlet pressure (G20)	20 mbar	20 mbar	20 mbar
Maximum burner pressure	10.5 mbar	11.9 mbar	12.3 mbar
Gas rate	1.22 m^3/h	1.63 m^3/h	2.31 m^3/h
Injector size	5x1.35 mm	7x1.30 mm	9x1.35 mm

2.3 EXPANSION VESSEL

	10e	14e	20e
Capacity	4.5 litres	4.5 litres	6.0 litres
Maximum system volume	47 litres	47 litres	63 litres
Pre-charge pressure	0.8 bar	0.8 bar	0.8 bar

2.4 DIMENSIONS (all models)

Height	740 mm
Width	366 mm
Depth	315 mm
Weight	30 kg

2.5 CLEARANCES (all models)

Top	150 mm from casing or 25mm above flue elbow (whichever is applicable)
Bottom	150 mm
Sides	12 mm
Front	600 mm

2.6 CONNECTIONS (all models)

Flow & return	22 mm compression
Gas	15 mm compression
Safety valve	1/2in. BSP

2.7 ELECTRICAL (all models)

Voltage	230V/50hz
Power consumption	125 W
Internal fuse	2 AL
External fuse	3 A

2.8 FLUE DETAILS

	10e &14e	20e
Maximum horizontal flue length (concentric)	4.5 metres	3.4 metres
Maximum vertical flue length (concentric)	5.5 metres	4.4 metres
Maximum twin flue length (horizontal or vertical)	14m/14m + terminal	14m/14m + terminal

2.9 EFFICIENCY

	10e	14e	20e
SEDBUK rating	77.0 %	79.2 %	78.05 %

Appliance type	C12 - C22 - C32
Category	IP20

2.10 PUMP DUTY

Fig. 3 shows the flow-rate available – after allowing for pressure loss through the appliance – against system pressure loss. When using this graph apply only the pressure loss of the system. The graph is based on a 20ºC temperature differential.

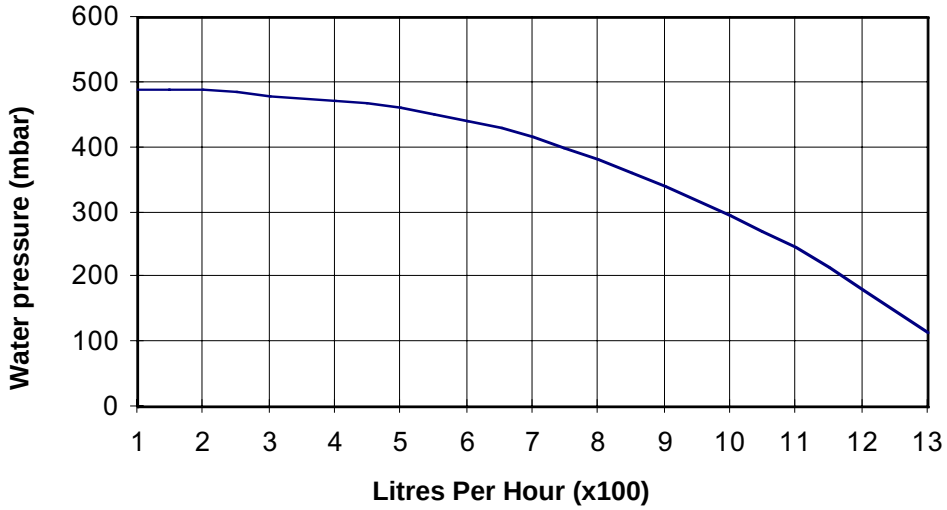

Fig. 3

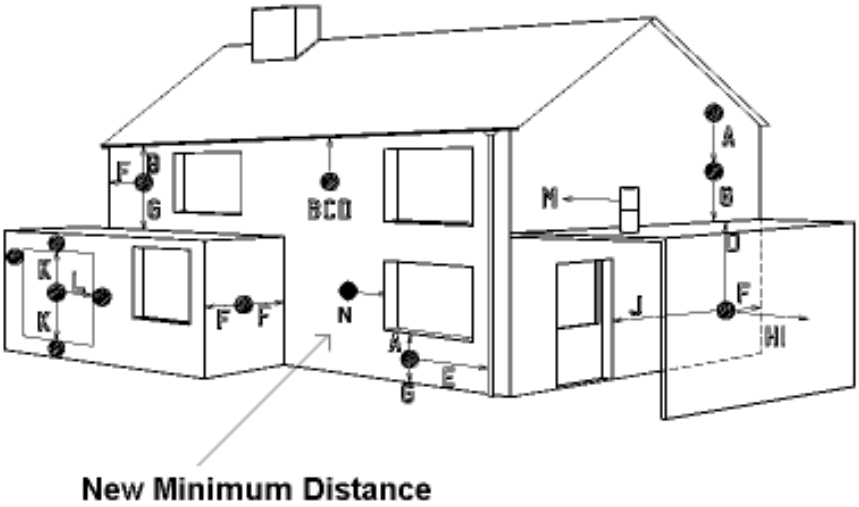

Terminal position for fan assisted boiler

(minimum distance)			mm
A	-	Directly below an open window or other opening (e.g. air brick)	300
B	-	Below gutters, soil pipes or drain pipes	25
C	-	Below eaves	25
D	-	Below balconies or car port roof	25
E	-	From vertical drain pipes and soil pipes	75
F	-	From internal or external corners	25
G	-	Above ground or below balcony level	300
H	-	From a surface facing a terminal	600
I	-	From a terminal facing a terminal	1200
J	-	From an opening in the car port (e.g. door window) into dwelling.	1200
K	-	Vertically from a terminal on the same wall	1500
L	-	Horizontally from a terminal on the same wall	300
M	-	Horizontally from a vertical terminal to a wall	300
N –		**Horizontally from an opening, airbrick, openable window, etc.**	**300**

NOTE: The flue must be terminated in a place not likely to cause a nuisance.

Fig. 4

This appliance must be installed by a competent person in accordance with the Gas Safety (Installation & Use) Regulations.

3.1 RELATED DOCUMENTS

The installation of this boiler must be in accordance with the relevant requirements of the Gas Safety (Installation & Use) Regulations, the local building regulations, the current I.E.E. wiring regulations, the bylaws of the local water undertaking, the Building Standards (Scotland) Regulation, and Building Standards (Northern Ireland) Regulations.
It should be in accordance also with any relevant requirements of the local authority and the relevant recommendations of the following British Standard Codes of Practice.

3.2 LOCATION OF APPLIANCE

The appliance may be installed in any room or internal space, although particular attention is drawn to the requirements of the current I.E.E. wiring regulations, and in Scotland, the electrical provisions of the Building Regulations, with respect to the installation of the appliance in a room or internal space containing a bath or shower. When an appliance is installed in a room or internal space containing a bath or shower, the appliance or any control pertaining to it must not be within reach of a person using the bath or shower.

BS 5440	PART 1	FLUES
BS 5440	PART 2	FLUES & VENTILATION
BS 5449	PART 1	FORCED CIRCULATION HOT WATER SYSTEMS
BS 6798		INSTALLATION OF BOILERS OF RATED INPUT NOT EXCEEDING 60kW
BS 6891		LOW PRESSURE INSTALLATION PIPES
BS 7074	PART 1	APPLICATION, SELECTION, AND INSTALLTION OF EXPANSION VESSELS AND ANCILLARY EQUIPMENT FOR SEALED WATER SYSTEMS

The location chosen for the appliance must permit the provision of a safe and satisfactory flue and termination. The location must also permit an adequate air supply for combustion purposes and an adequate space for servicing and air circulation around the appliance. Where the installation of the appliance will be in an unusual location special procedures may be necessary, BS 6798 gives detailed guidance on this aspect.

A compartment used to enclose the appliance must be designed and constructed specifically for this purpose. An existing compartment/ cupboard may be utilised provided that it is modified to suit.

Details of essential features of compartment/ cupboard design including airing cupboard installations are given in BS 6798. This appliance is not suitable for external installation.

3.3 GAS SUPPLY

The gas meter – as supplied by the gas supplier – must be checked to ensure that it is of adequate size to deal with the maximum rated input of all the appliances that it serves. Installation pipes must be fitted in accordance with BS 6891.

Pipe work from the meter to the appliance must be of adequate size. Pipes of a smaller size than the appliance gas inlet connection must not be used. The installation must be tested for soundness in accordance with BS6891.

If the gas supply serves more than one appliance, it must be ensured that an adequate supply is maintained to each appliance when they are in use at the same time.

3.4 FLUE SYSTEM

The terminal should be located where the dispersal of combustion products is not impeded and with due regard for the damage and discoloration that may occur to building products located nearby. The terminal must not be located in a place where it is likely to cause a nuisance (see fig. 4).

3.4 FLUE SYSTEM (Cont'd.)

In cold and/or humid weather, water vapour may condense on leaving the terminal; the effect of such pluming must be considered.

If installed less than 2m above a pavement or platform to which people have access (including balconies or flat roofs) the terminal must be protected by a guard of durable material. The guard must be fitted centrally over the terminal. Refer to BS 5440 Part 1, when the terminal is 0.5 metres (or less) below plastic guttering or 1 metre (or less) below painted eaves.

3.5 AIR SUPPLY

The following notes are intended for general guidance only.

This appliance is a room-sealed, fan-flued boiler, consequently it does not require a permanent air vent for combustion air supply.

When installed in a cupboard or compartment, ventilation for cooling purposes is also not required.

3.6 WATER CIRCULATION

Detailed recommendations are given in BS 5449 Part 1 and BS 6798. The following notes are for general guidance only.

3.6.1 PIPEWORK

It is recommended that copper tubing to BS 2871 Part 1 is used in conjunction with soldered capillary joints.

Where possible pipes should have a gradient to ensure air is carried naturally to air release points and that water flows naturally to drain cocks.

Except where providing useful heat, pipes should be insulated to avoid heat loss and in particular to avoid the possibility of freezing. Particular attention should be paid to pipes passing through ventilated areas such as under floors, loft space, and void areas.

3.6.2 AUTOMATIC BY-PASS

The appliance has a built-in automatic by-pass, consequently there is no requirement for an external by-pass, however the design of the system should be such that it prevents boiler 'cycling'.

3.6.3 DRAIN COCKS

These must be located in accessible positions to facilitate draining of the appliance and all water pipes connected to the appliance. The drain cocks must be manufactured in accordance with BS 2879.

3.6.4 AIR RELEASE POINTS

These must be positioned at the highest points in the system where air is likely to be trapped. They should be used to expel trapped air and allow complete filling of the system.

3.6.5 EXPANSION VESSEL

The appliance has an integral expansion vessel to accommodate the increased volume of water when the system is heated. It can accept up to 4.5 litres (10e & 14e) or 6.0 litres (20e) of expansion from within the system, generally this is sufficient, however if the system has an unusually high water content, it may be necessary to provide additional expansion capacity (see 6.19).

3.6.6 FILLING POINT

A method for initial filling of the system and replacing water lost during servicing etc. must be provided. This method of filling must comply with the local water authority regulations. Fig. 5 shows a widely accepted method.

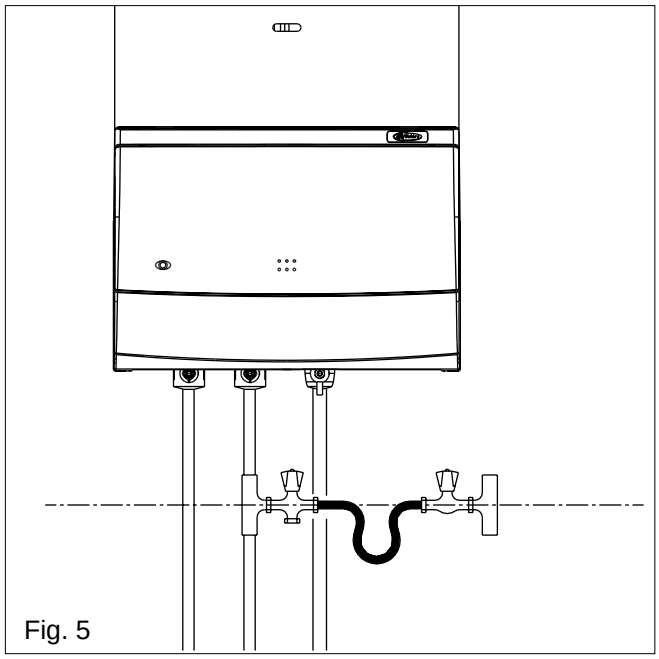

Fig. 5

3.6.7 LOW PRESSURE SEALED SYSTEM

An alternative method of filling the system would be from an independent make-up vessel or tank mounted in a position at least 1 metre above the highest point in the system and at least 5 metres above the boiler (see fig. 5A).

The cold feed from the make-up vessel or tank must be fitted with an approved non-return valve and stopcock for isolation purposes. The feed pipe should be connected to the return pipe as close to the boiler as possible.

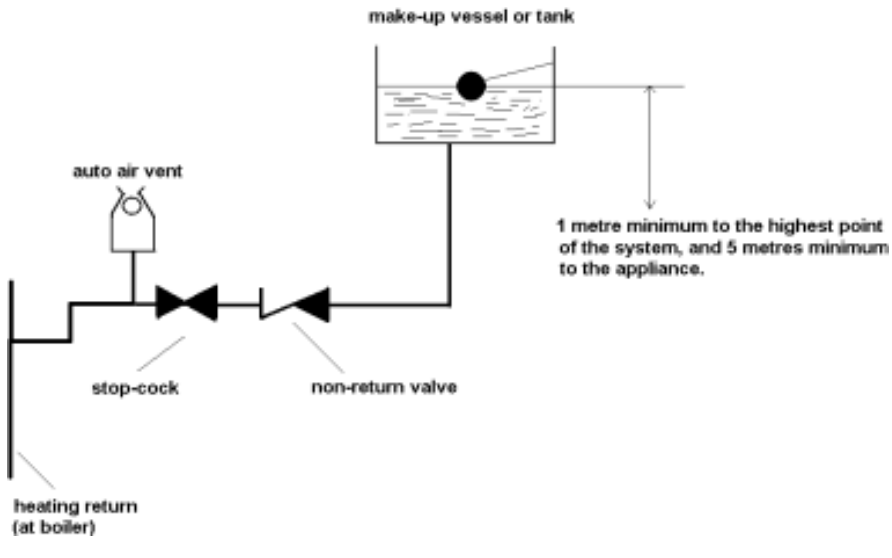

Fig. 5a

3.6.8 FREQUENT FILLING

Frequent filling or venting of the system may be indicative of a leak. Care should be taken during the installation of the appliance to ensure all aspects of the system are capable of withstanding pressures up to at least 3 bar.

3.7 ELECTRICAL SUPPLY

The appliance is supplied for operation on 230V @ 50Hz electrical supply; it must be protected with a 3-amp fuse. The method of connection to the mains electricity supply must allow for complete isolation from the supply. The preferred method is by using a double-pole switch with a contact separation of at least 3mm. The switch must only supply the appliance and its corresponding controls, i.e. time clock, room thermostat, etc. Alternatively an un-switched shuttered socket with a fused 3-pin plug both complying with BS 1363 is acceptable.

3.8 MOUNTING ON A COMBUSTIBLE SURFACE

If the appliance is to be fitted on a wall of combustible material, a sheet of fireproof material must protect the wall.

3.9 TIMBER FRAMED BUILDINGS

If the appliance is to be fitted in a timber framed building, it should be fitted in accordance with the Institute of Gas Engineers publication (IGE/UP/7) 'Guide for Gas Installations in Timber Frame Buildings'.

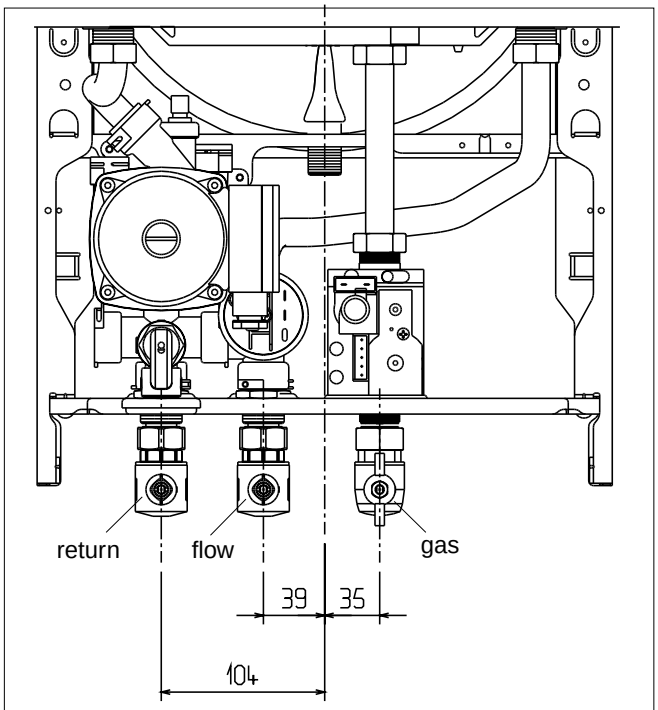

Fig. 6

4.1 DELIVERY

The appliance is delivered in a heavy-duty cardboard carton. Lay the carton on the floor with the writing the correct way up.

4.2 CONTENTS

Contained within the carton is:

- The boiler
- The wall mounting bracket
- Template
- An accessories pack containing the appliance service valves and washers
- The instruction pack containing the installation & servicing instructions, user instructions, Benchmark logbook, guarantee registration card, a 3-amp fuse and flue restrictor ring.

4.3 UNPACKING

At the top of the carton pull both sides open – do not use a knife – unfold the rest of the carton from around the appliance, carefully remove all protective packaging from the appliance, and lay the accessories etc. to one side.

4.4 PREPARATION FOR MOUNTING THE APPLIANCE

The appliance should be mounted on a smooth, non-combustible, vertical surface, which must be capable of supporting the full weight of the appliance. Care should be exercised when determining the position of the appliance with respect to hidden obstructions such as pipes, cables, etc.

When the position of the appliance has been decided – using the template supplied – carefully mark the position of the wall bracket (see fig. 7) and flue-hole (if applicable).

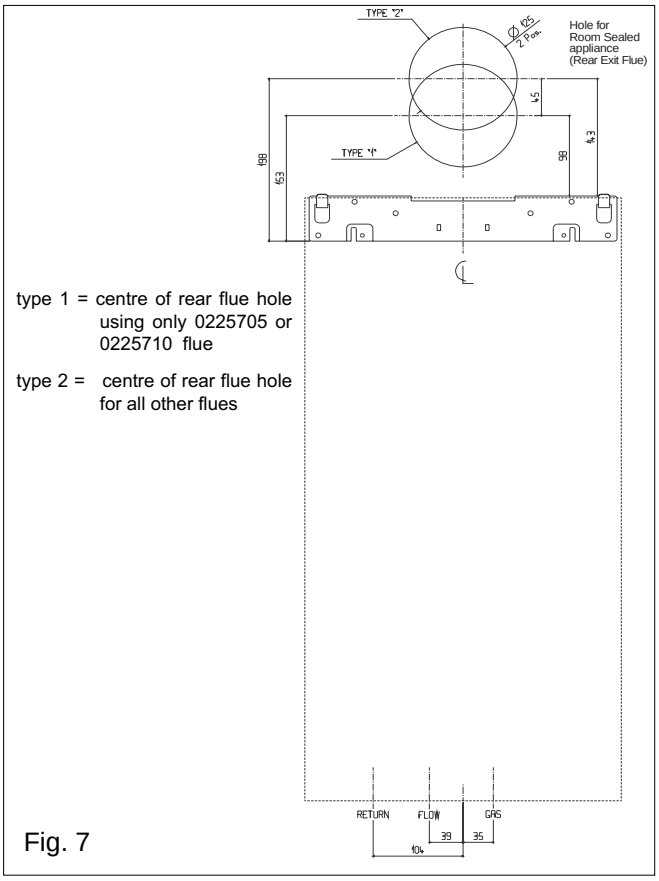

Fig. 7

4.4.1 IMPORTANT

There are two holes on the template. The lower hole should be used with the telescopic flue kit (part no. 0225705 & 0225710). The upper hole is for use with all other horizontal flue kits.

4.4.2 MAXIMUM FLUE LENGTHS

Flue system	Mynute 10e/14e	Mynute 20e
Concentric Horizontal	4.5m	3.4m
Concentric Vertical	5.5m	4.4m
Twin flue	14m/14m + terminal	14m/14m + terminal

4.5 FITTING THE FLUE

The top flue outlet permits both horizontal and vertical flue applications to be considered, alternatively, the Vokera twin flue system can be utilised if longer flue runs are required.

4.5.1 CONCENTRIC HORIZONTAL FLUE

(For concentric vertical flue, see 4.5.2)
(For twin flue applications, see 4.5.3)

The appliance flue outlet elbow can be rotated through 360º on its vertical axis. In addition the flue may be extended from the outlet elbow in the horizontal plane (see 4.4.2), however if the flue is to be extended or additional bends are to be fitted, the standard horizontal flue kit (part no. 2359029) **must** be used. A reduction must also be made to the maximum length (see table) when additional bends are used.

Bend	Reduction in maximum flue length for each bend
45º bend	0.5 Metre
90º bend	1.0 Metre

Horizontal flue terminals and accessories

Part No.	Description	Min-Max Length
0225705	Standard telescopic flue	380mm – 600mm (Dimension 'X')
0225710	Extended telescopic flue	600mm – 920mm (Dimension 'X')
2359029	Horizontal flue kit	
	For use with add. Bends & extensions	833mm (dimension 'X')
2359069	750mm extension	750mm
2359079	1500mm extension	1500mm
2359049	45º bend (pair)	N/A
2359059	90º bend	N/A
0225760	Wall bracket (5)	N/A

Using the template provided (see 4.4.1), mark and drill a 125mm hole for the passage of the flue pipe. The hole should have a 1º drop from the boiler to outside, to eliminate the possibility of rainwater entering the appliance via the flue.

The fixing holes for the wall-mounting bracket should now be drilled and plugged, an appropriate type and quantity of fixing should be used to ensure that the bracket is mounted securely. Once the bracket has been secured to the wall, mount the appliance onto the bracket.

FITTING THE TELESCOPIC FLUE KIT (0225705 & 0225710)
Carefully measure the distance from the centre of the appliance flue outlet to the face of the outside wall (dimension 'X' see fig. 8). Add 50mm to dimension 'X' to give the overall flue length (dimension 'Y'). Using the complete telescopic flue assembly adjust the length to suit dimension 'Y'. Once the telescopic flue terminal has been adjusted to the correct length, secure the flue assembly with the screw supplied.

Insert the flue restrictor ring (supplied in the instruction pack) into the appliance flue gas outlet. Slide the flue assembly into the previously drilled flue hole and locate the flue bend over the appliance flue outlet. Push the flue bend down over the appliance flue outlet and ensure the correct seal is made. Pull the flue assembly towards and over the flue bend – using a twisting action – ensuring the correct seal is made. Check that the terminal protrudes past the finished outside wall by the correct length (115mm).

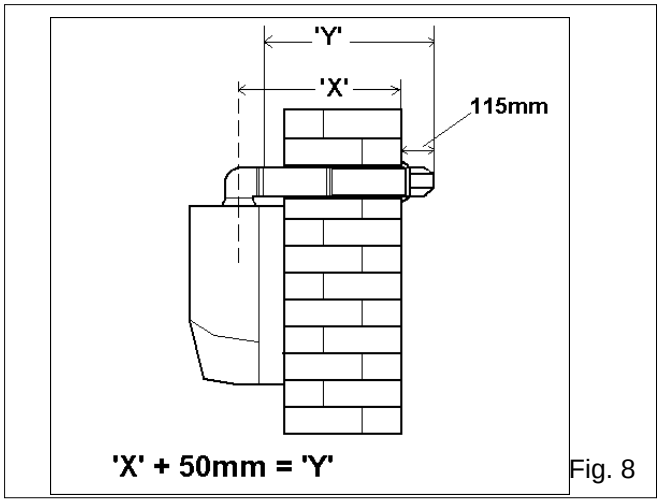

Fig. 8

NOTE
You must ensure that the entire flue system is properly supported and connected.

Seal the flue assembly to the wall using cement or a suitable alternative that will provide satisfactory weatherproofing. The interior and exterior trim can now be fitted.

FITTING THE STANDARD (2359029) HORIZONTAL FLUE KIT (see 4.4.1)

Carefully measure the distance from the centre of the appliance flue outlet to the face of the outside wall (dimension 'X' see fig. 8A). Ensure the inner (60mm) pipe is fully inserted into the outer (100mm) pipe (when the inner pipe is fully inserted, it stands proud of the outer pipe by 7.5mm). Add 32mm to dimension 'X' to give the overall flue length (dimension 'Y'). The standard horizontal flue kit (part no. 2359029) is suitable for a distance (dimension 'Y') of up to 865mm.

NOTE
Dimension 'Y' is measured from the end of the terminal to the end of the outer (100mm) pipe.
The internal trim should be fitted to the flue pipe before connection of the 90º bend.

Insert the flue restrictor ring (supplied with instruction pack) into the appliance flue gas outlet if the total flue length is less than 1.0 metre.

If the horizontal flue kit (2359029) requires to be cut to the correct size (dimension 'Y'), you must ensure that the inner (60mm) pipe stands proud of the outer (100mm) pipe by 7.5mm (see fig. 8B). Ensure any burrs are filed or removed and that any seals are located properly before assembly.

Connect the inner (60mm) pipe of the terminal assembly to the push-fit end of the 90º bend (supplied) using a twisting action. Insert the assembled flue into the previously drilled hole. Using the clips & screws supplied, connect the flue assembly to the boiler, ensuring that the terminal protrudes past the finished outside wall by the correct length (135mm).

You must ensure that the entire flue system is properly supported and connected.

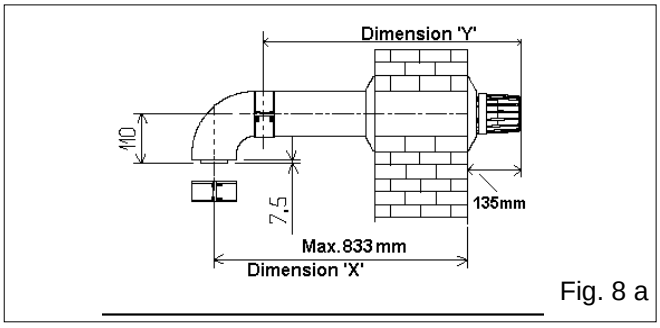

Fig. 8 a

Seal the flue assembly to the wall using cement or a suitable alternative that will provide satisfactory weatherproofing. The exterior trim can now be fitted.

EXTENDING THE HORIZONTAL FLUE
If the horizontal flue requires extension/s or additional bend/s, the standard horizontal flue terminal (2359029) must be used. Connect the bend – supplied with the terminal kit – to the top of the boiler using the clips, screws, & gaskets supplied. The additional bends & extensions have an internal push-fit connection, care should be taken to ensure that the correct seal is made when assembling the flue system. Connect the required number of flue extensions or bends (up to the maximum equivalent flue length) to the flue terminal using the clips, screws, & gaskets supplied (see fig. 8A & 8B).

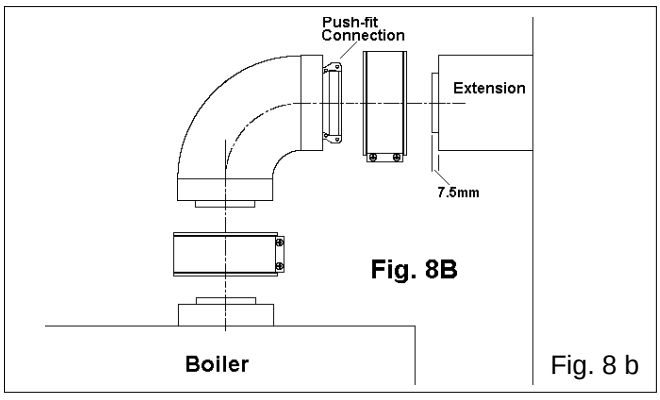

Fig. 8 b

NOTE
When cutting the horizontal flue terminal or an extension to the required length, you must ensure that the excess is cut from the plain end of the terminal or extension, and that the inner (60mm) pipe is 7.5mm longer than outer (100mm) pipe (see fig. 8A & 8B). Remove any burrs, and check that any seals are located properly.

You must ensure that the entire flue system is properly supported and connected.

Seal the flue assembly to the wall using cement or a suitable alternative that will provide satisfactory weatherproofing. The interior and exterior trim can now be fitted.

4.5.2 CONCENTRIC VERTICAL FLUE

The vertical flue terminal can be connected directly to the appliance flue outlet. Alternatively, an extension or bend can be connected to the appliance flue outlet if desired (see 4.4.2), however if additional bends are fitted, a reduction must be made to the maximum flue length (see table below).

Reduction for bends

Bend	Reduction in maximum flue length for each bend
45º bend	0.5 metre
90º bend	1.0 metre

Vertical flue terminal and accessories

Part No.	Description	Length
2359039	Vertical flue terminal	1.0 metre
0225770	Pitched roof flashing plate	N/A
0225765	Flat roof flashing plate	N/A
2359069	750mm extension	750mm
2359079	1500mm extension	1500mm
2359049	45º bend (pair)	N/A
2359059	90º bend	N/A
0225760	Wall bracket (5)	N/A

Using the dimensions given in fig. 9 as a reference, mark and cut a 105mm hole in the ceiling and/or roof.

Fit the appropriate flashing plate to the roof and insert the vertical flue terminal through the flashing plate from the outside, ensuring that the collar on the flue terminal fits over the flashing.

The fixing holes for the wall-mounting bracket should now be drilled and plugged, an appropriate type and quantity of fixing should be used to ensure that the bracket is mounted securely. Once the bracket has been secured to the wall, mount the appliance onto the bracket.

IMPORTANT
The vertical flue terminal is 1.0 metre in length and cannot be cut; therefore it may be necessary to adjust the height of the appliance to suit or use a suitable extension.

Insert the flue restrictor ring into the appliance flue outlet (see fig. 1), if the total flue length – including the allowance for any additional bends – does not exceed 1.0 metre.

Connect the vertical flue assembly to the boiler flue spigot using the 60mm & 100mm clips, gaskets, & screws (supplied), ensuring the correct seal is made. The flue support bracket (supplied with the vertical flue kit) can now be fitted.

If the vertical flue requires extension/s or additional bend/s, connect the required number of flue extensions or bends (up to the maximum equivalent flue length) between the boiler and vertical flue assembly (see fig. 8B).

NOTE
When cutting an extension to the required length, you must ensure that the excess is cut from the plain end of the extension and that the inner (60mm) pipe is 7.5mm longer than outer (100mm) pipe (see fig. 8B). Remove any burrs, and check that any seals are located properly.

You must ensure that the entire flue system is properly supported and connected.

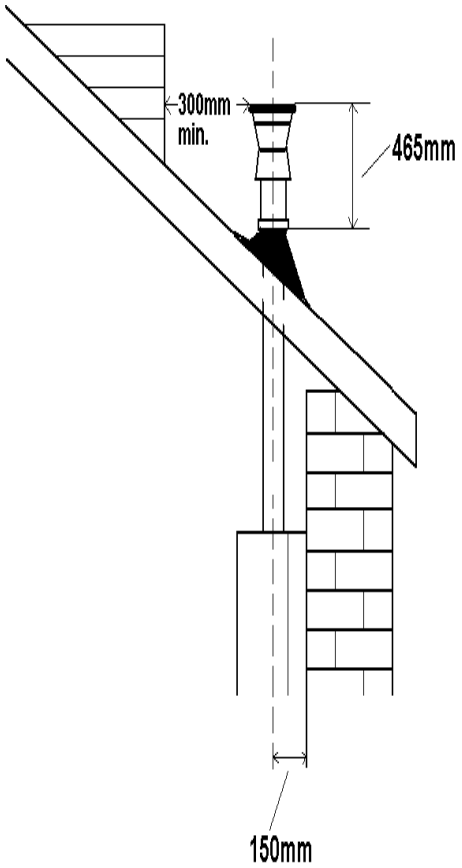

Fig. 9

4.5.3 TWIN FLUE SYSTEM

The Vokera twin flue system enables greater flue distances to be achieved (see 2.8) than that of the standard concentric flue system. It can be used for horizontal or vertical applications, however the twin flue system must be converted to the dedicated concentric flue kit for termination. It is essential that the installation of the twin flue system be carried out in strict accordance with these instructions.

GUIDANCE NOTES ON TWIN FLUE INSTALLATION

- The flue must have a fall back of 1º back to the appliance to allow any condensate that may form in the flue system to drain via the condensate drain. Consideration must also be given to the fact that there is the possibility of a small amount of condensate dripping from the terminal.
- Ensure that the entire flue system is adequately supported, use at least one bracket for each extension.
- The entire flue system must be adequately insulated to maintain heat within the flue system thereby reducing the possibility of condensate production.
- As the exhaust outlet pipe can reach very high temperatures it must be protected to prevent persons touching the hot surface.

Bend	Reduction in maximum flue length for each bend
45º bend	1.0 metre
90º bend	1.0 metre

Twin flue accessories

Part No.	Description	Length
0225805	Horizontal flue terminal	1.0 metre
0225810	Vertical flue terminal	1.0 metre
300	Twin adapter kit	N/A
0225770	Pitched roof flashing plate	N/A
0225765	Flat roof flashing plate	N/A
0225815	Condensate drain kit	N/A
0225820	0.25m extension (pair)	250mm
0225825	0.5m extension (pair)	500mm
0225830	1.0m extension (pair)	1000mm
0225835	2.0m extension (pair)	2000mm
0225840	45º bend (pair)	N/A
0225845	90º bend (pair)	N/A
0225850	Twin bracket (5)	N/A
0225855	Single bracket (5)	N/A

MOUNTING THE BOILER

The fixing holes for the wall-mounting bracket should now be drilled and plugged, an appropriate type and quantity of fixing should be used to ensure that the bracket is mounted securely. Once the bracket has been secured to the wall, mount the appliance onto the bracket.

4.5.3.1 INSTALLATION OF TWIN ADAPTOR KIT (fig. 10)

- Insert the restrictor ring (supplied with the instruction pack) if the total flue length – including the allowance for any bends – is less than 7.5 m (20e) and 5 m (14e & 10e).
- Insert the exhaust connection manifold onto the appliance flue outlet.
- Place the silicone seal (supplied with twin adapter kit) over the rim of the exhaust connection manifold.
- Remove the blanking plate (located to the left of the appliance flue outlet) and – using the same screws – install the air baffle.

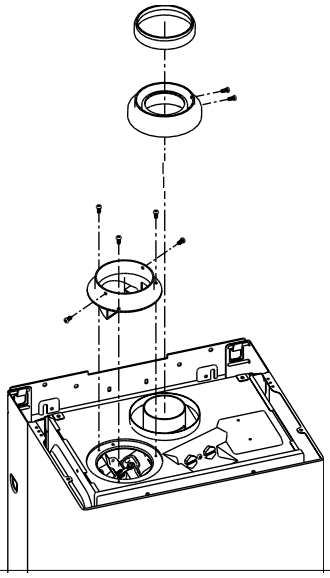

Fig. 10

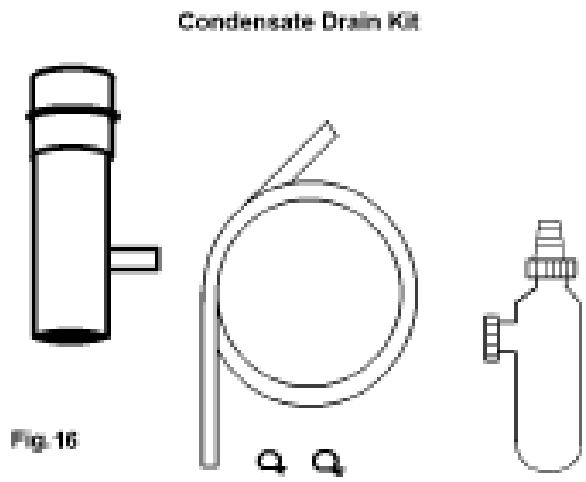

Fig. 11

4.5.3.2 INSTALLATION OF CONDENSATE DRAIN KIT (fig. 11)

The condensate drain kit must be fitted within 1 metre of the appliance flue outlet. It is recommended that the condensate drain kit should be fitted in the vertical plane, however it can be fitted horizontally with care.

- Fit the first bend to the condensate drain kit or exhaust connection manifold by firmly pushing in to position.
- Using the two holes in the exhaust connection manifold as a guide, drill a 3mm hole in each and secure using the screws provided.
- Connect the air inlet pipe to the air baffle as above.
- The twin flue pipes extensions and accessories can now be installed by pushing together (the plain end of each extension or bend should be pushed approximately 50mm into the female socket of the previous piece).

The condensate drain trap must be connected to the drain in accordance with building Regulations or other rules in force.

4.5.3.3 HORIZONTAL TERMINATION (See fig. 12)

The twin flue system must be converted to the dedicated concentric flue kit for termination.

- The horizontal terminal is supplied with a built-in converter box and cannot be shortened.
- A 130mm hole is required for the passage of the concentric terminal through the wall.

Depending on site conditions it may be preferable to install the terminal assembly prior to fitting the twin flue pipes.

Mark and drill a 130mm hole for the passage of the horizontal flue terminal, ensuring that there is a 1º fall back to the boiler (17mm per 1000mm). Insert the terminal assembly into the flue hole.

Push-fit the twin flue pipes onto the concentric to twin converter box ensuring that the exhaust pipe connects to the exhaust connection on the concentric to twin converter.
If necessary cut the plain ends (male) of the twin flue pipes to allow connection to the concentric to twin converter.

NOTE; before cutting twin flue pipes ensure allowances have been made for connection onto the previous piece and onto the concentric to twin converter.

The last twin flue pipes must be pushed 50mm onto the male sockets of the concentric to twin converter.

NOTE;
You must ensure that the entire flue system is properly supported and connected.

Seal the flue terminal assembly to the wall using cement or a suitable alternative that will provide satisfactory weatherproofing.

The interior and exterior trim can now be fitted.

The converter box must be removed whilst inserting the vertical flue terminal through the flashing plate.

4.5.3.4 VERTICAL TERMINATION (See fig. 13)

The twin flue system must be converted to the dedicated concentric flue kit for termination.

- The vertical terminal is supplied with a built-in converter box and cannot be shortened.
- A 130mm hole is required for the passage of the concentric terminal through the ceiling and/ or roof.

Depending on site conditions it may be preferable to install the terminal assembly prior to fitting the twin flue pipes.

Fit the appropriate flashing plate to the roof and insert the vertical flue terminal through the flashing plate from the outside, ensuring that the collar on the flue terminal fits over the flashing.

Push-fit the twin flue pipes onto the concentric to twin converter ensuring that the exhaust pipe connects to the exhaust connection on the concentric to twin converter.
If necessary cut the plain ends (male) of the twin flue pipes to allow connection to the concentric to twin converter.

NOTE

- Before cutting twin flue pipes ensure allowances have been made for connection onto the previous piece and onto the concentric to twin converter. The last twin flue pipes must be pushed 50mm onto the male spigots of the concentric to twin converter.
- You must ensure that the entire flue system is properly supported and connected.
- Ensure that any horizontal sections of pipe have a 1º fall towards the appliance (17mm per 1000mm).

Fig. 12

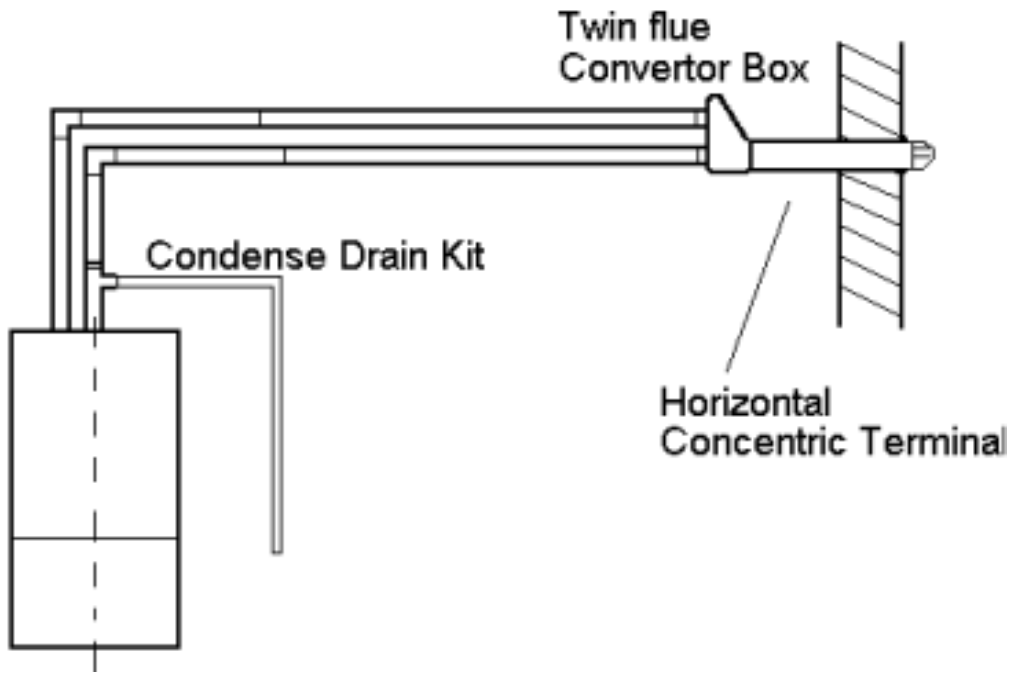

Fig. 13

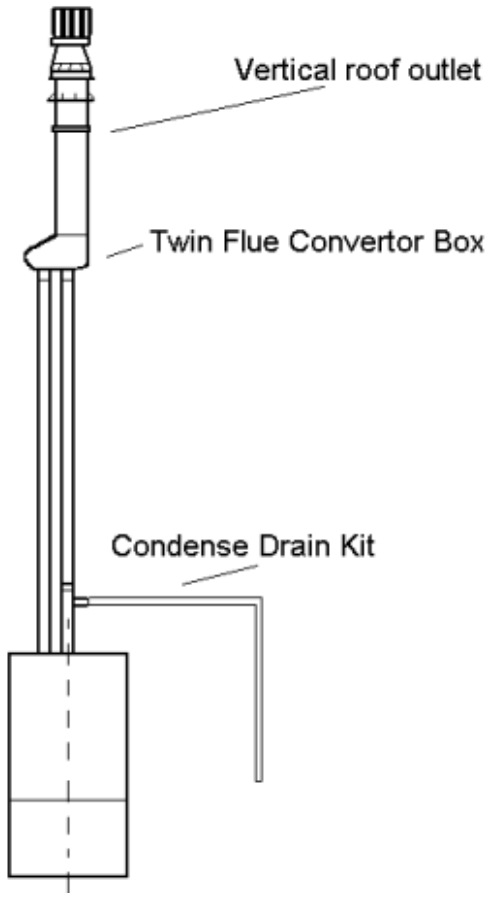

4.6 CONNECTING THE GAS AND WATER

The appliance is supplied with an accessories pack that contains sealing washers and service valves. The service valves are of the compression type.

When connecting pipe work to the valves, tighten the compression end first then insert the sealing washers before tightening the valve to the appliance.

NOTE

It will be necessary to hold the valve with one spanner whilst tightening with another.

4.6.1 GAS (fig. 6)

The appliance is supplied with a 15mm service valve, connect a 15mm pipe to the inlet of the valve and tighten both nuts.

NOTE

It will be necessary to calculate the diameter of the gas supply pipe to ensure the appliance has an adequate supply of gas.

4.6.2 FLOW & RETURN (fig. 6)

The appliance is supplied with 22mm service valves for the flow and return connections, connect a 22mm pipe to the inlet of each valve and tighten both nuts.

4.6.3 SAFETY VALVE (fig. 1)

Connect a suitable coupling and 15mm pipe to the safety valve outlet and tighten. The discharge pipe must have a continuos fall away from the appliance to outside and allow any water to drain away thereby eliminating the possibility of freezing. The discharge pipe must terminate in a position where any water – possibly boiling – discharges safely without causing damage or injury, but is still visible.

4.7 ELECTRICAL CONNECTIONS

The electrical supply must be as specified in 3.7. A qualified electrician should connect the electrical supply to the appliance. If controls – external to the appliance – are required, a competent person must undertake the design of any external electrical circuits, please refer to section 8 for detailed instructions. ANY EXTERNAL CONTROL OR WIRING MUST BE SERVED FROM THE SAME ISOLATOR AS THAT OF THE APPLIANCE. The supply cable from the isolator to the appliance must be 3-core flexible sized 0.75mm to BS 6500. Wiring to the appliance must be rated for operation in contact with surfaces up to 90°C.

4.7.1 CASING REMOVAL

To gain access to the appliance electrical connections you must first remove the casing, proceed as follows:

- Locate and remove the 2 screws that secure the controls fascia to the appliance casing (see fig 14).

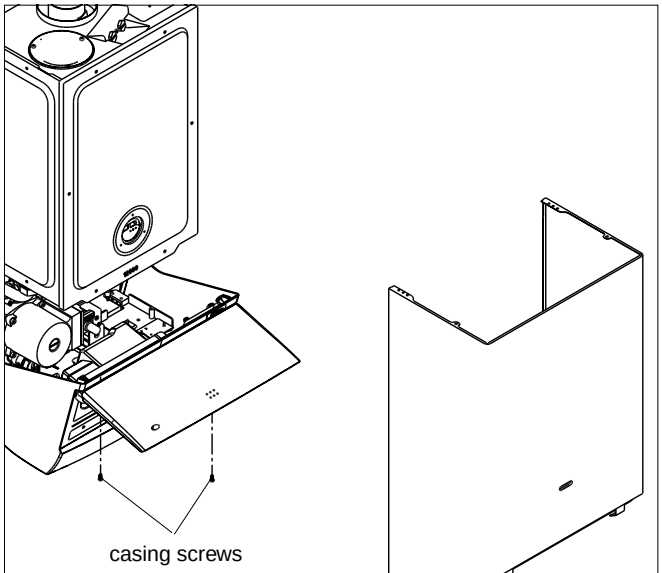

Fig. 14

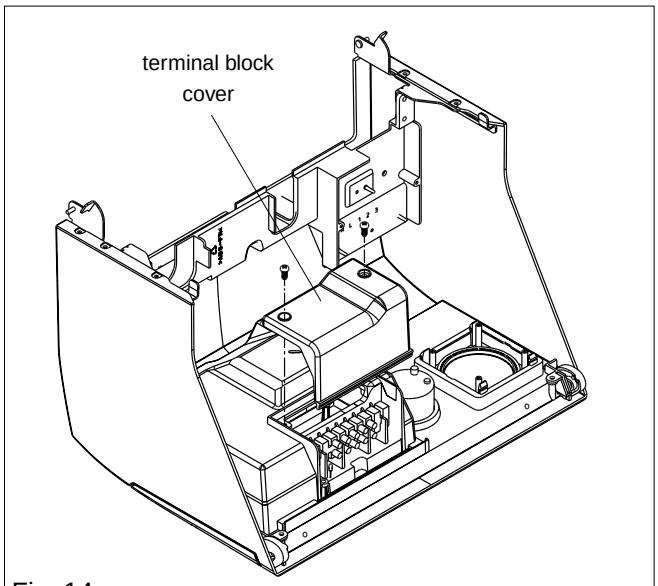

Fig. 14a

- Gently lower the control fascia until it rests.
- Gently pull one side of the casing then the other to disengage it from the retaining clips.
- Lift the casing upward to disengage it from the top locating hooks and then remove.
- Store the casing and screws safely until required. Re-fit in the reverse order.

4.7.2 APPLIANCE TERMINAL BLOCK

The appliance terminal block is located on the left side of the control fascia (see fig. 14a). Locate and remove the screws securing the terminal block cover.

NOTE

The appliance comes with a factory fitted link to allow basic operation of the boiler via the mode selector switch. If it is anticipated that external controls will be required please refer to the wiring diagrams in section 8 for more detailed information.

4.7.3 CONNECTING THE MAINS (230V) INPUT (see fig. 16)

Remove the terminal block cover as described in 4.7.2. Pass the cable through the cable anchorage (see fig. 15). On the terminal block there are 9 terminals from left to right they are:

- EARTH
- LIVE
- NEUTRAL
- 1
- 2
- 3
- 4
- 5
- 6

Connect the supply cable wires (earth, live, and neutral) to their corresponding terminals on the appliance terminal block. Ensure that the EARTH wire is left slightly longer that the others, this will prevent strain on the earth wire should the cable become taut.

Do not remove the link wire (1 – 2) unless additional external controls are to be fitted (see section 8). Re-fit the appliance terminal block cover. The securing screw on the cable anchorage should now be tightened. This must be done before the control fascia is re-fitted in the upright position. The appliance casing and screws can now be re-fitted.

Fig. 15

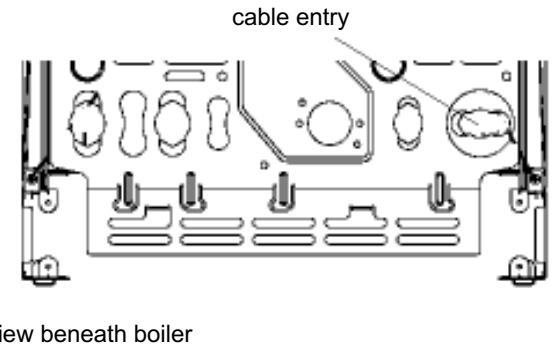

Fig. 16

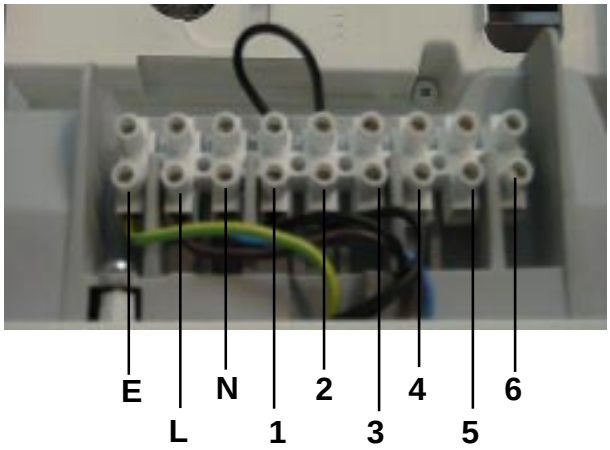

Fig. 17

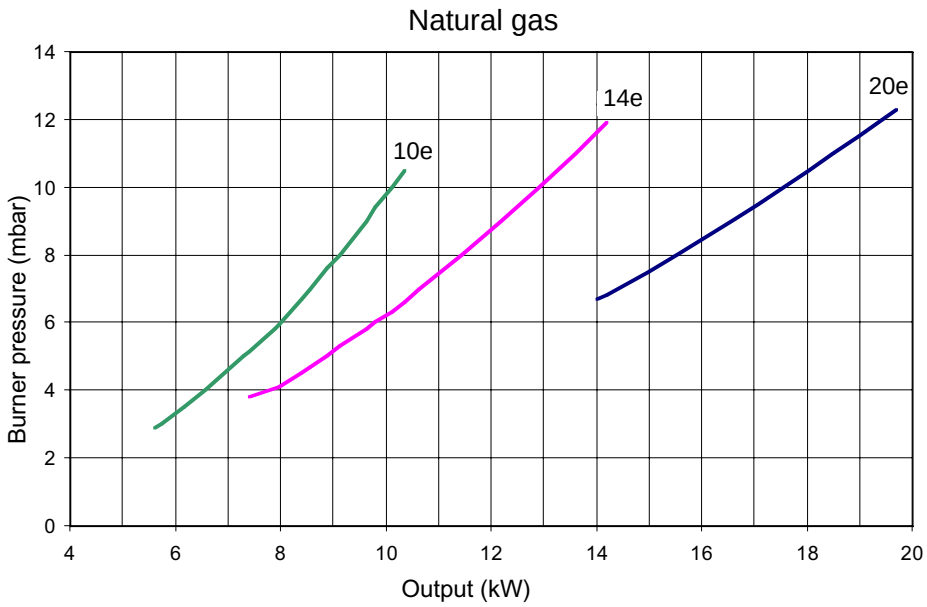

Fig. 17a

SECTION 5: COMMISSIONING

5.1 GAS SUPPLY INSTALLATION

Inspect the entire installation including the gas meter, test for soundness and purge. Refer to BS 6891 for specific instruction.

5.2 THE HEATING SYSTEM

The appliance contains components that may become damaged or rendered inoperable by oils and/or debris that are residual from the installation of the system, consequently it is essential that the system be flushed in accordance with the following instructions.

5.3 INITIAL FILLING OF THE SYSTEM

Ensure both flow and return service valves are open, remove appliance casing as described in 4.7.1, identify the automatic air release valve and loosen the dust cap by turning the cap anti-clockwise one full turn. IMPORTANT, THERE ARE NO MANUAL AIR RELEASE VALVES LOCATED ON THE APPLIANCE. Ensure all manual air release valves located on the heating system are closed. Using the method of filling as described in fig. 5, slowly proceed to fill the system. As water enters the system the pressure gauge will begin to rise. Once the gauge has reached 1 BAR close the filling valve and begin venting all manual air release valves, starting at the lowest first. It may be necessary to go back and top-up the pressure until the entire system has been filled. Inspect the system for water soundness, rectifying any leaks.

5.4 INITIAL FLUSHING

The whole of the heating system must be flushed both cold and hot as detailed in 5.8. Open all radiator or heating valves and the appliance flow & return service valves. Drain the boiler and system from the lowest points. Open the drain valve full bore to remove any installation debris from the boiler prior to lighting. Refill the boiler and heating system as described in 5.3.

5.5 PRE-OPERATION CHECKS

Before attempting the initial lighting of the appliance, the following checks must be carried out:

- Ensure all gas service valves from the meter to the appliance are open and the supply pipe has been properly purged.
- Ensure the proper electrical checks have been carried out, (see 7.7) particularly continuity, polarity, and resistance to earth.
- Ensure the 3 AMP fuse – supplied with the appliance – has been fitted.
- Ensure the system has been filled, vented, and the pressure set to 1 BAR.
- Ensure the flue system has been fitted properly and in accordance with the instructions.
- Ensure all appliance service valves are open.

5.6 INITIAL LIGHTING

Ensure the electrical supply to the appliance is switched on. Switch the time clock or programmer to an 'on' position and ensure all external controls are also calling for heat. Turn the mode selector switch to the 'on' position (fig. 1).

The appliance will now go through an ignition sequence as described in 1.2. Should the appliance fail to ignite, refer to 5.5 and/or section 7 (fault finding).

5.7 CHECKING THE BURNER PRESSURE

Although the burner pressure is factory set, it is necessary to check it during commissioning. Isolate the appliance from the electrical supply and attach a suitable manometer to the gas valve outlet test nipple (see fig. 17). Light the boiler as described in 5.6 and compare the reading on the manometer with the value described in 2.2. If adjustment is required, follow the detailed instructions in section 7 (7.3).

Once the burner pressure has been checked, isolate the appliance from the electrical supply, remove the manometer, and tighten the gas valve outlet test nipple.

5.8 FINAL FLUSHING OF THE HEATING SYSTEM

The system should be flushed in accordance with BS 7593. Turn on the boiler for central heating and hot water and allow the boiler to reach temperature. Turn off the boiler and drain the system whilst still hot.

Refill the boiler and system as described in 5.3.

Although not necessary for the correct operation of the boiler, an inhibitor may be added at this point. Contact the inhibitor manufacturer for further information regarding application and dosage.

5.9 SETTING THE BOILER OPERATING TEMPERATURE

The flow outlet temperature can be adjusted between 40°C - 80°C via the thermostat knob (see fig.1).

5.10 SETTING THE SYSTEM DESIGN PRESSURE

The design pressure should be a minimum of 1 BAR and a maximum of 1.5 BAR.

The actual reading should ideally be 1BAR plus the equivalent height in metres (0.1 BAR = 1 metre) to the highest point in the system above the base of the appliance (up to the maximum of 1.5 BAR total).
N.B. The safety valve is set to lift at 3 BAR/30 metres/45 psig.

To lower the system pressure to the required value, pull lever on head of safety valve to release water until the required figure registers on the pressure gauge (see fig. 1).

5.11 REGULATING THE CENTRAL HEATING SYSTEM

Fully open all radiator and circuit valves and run the appliance for both heating and hot water until heated water is circulating. If conditions are warm remove any thermostatic heads. Adjust radiator return valves and any branch circuit return valves until the individual return temperatures are correct and are approximately equal.

5.12 FINAL CHECKS

- ENSURE ALL TEST NIPPLES ON THE APPLIANCE GAS VALVE HAVE BEEN TIGHTENED AND CHECKED FOR SOUNDNESS.
- ENSURE THE APPLIANCE FLUE SYSTEM IS FITTED CORRECTLY AND IS PROPERLY SECURED.
- ENSURE ALL PIPE WORK IS RE-CHECKED FOR SOUNDNESS.
- RE-FIT APPLIANCE CASING.
- COMPLETE APPLIANCE LOGBOOK.

Complete details of the boiler, controls, installation, and commissioning in the logbook supplied with the boiler. This is an important document, which must be correctly completed and handed to the user. Failure to install and commission the appliance to the manufacturers instructions may invalidate the warranty.

5.13 INSTRUCTING THE USER

Hand over all documentation supplied with this appliance – including these instructions – and explain the importance of keeping them in a safe place.

Explain to the user how to isolate the appliance from the gas, water, and electricity supplies, and the locations of all drain points.

Show the user how to operate the appliance and its associated controls correctly.

Show the user the location of the filling valve and how to top-up the system pressure correctly, and show the location of all manual air release points.

Explain to the user how to turn off the appliance for both long and short periods and advise on the necessary precautions to prevent frost damage.

Explain to the user that for continued safe and efficient operation, the appliance must be serviced annually by a competent person.

6.1 GENERAL

To ensure the continued safe and efficient operation of the appliance, it is recommended that it is checked and serviced at regular intervals.

The frequency of servicing will depend upon the particular installation conditions, but in general, once per year should be adequate.

It is the law that any servicing work is carried out by competent person such as a Vokera engineer, an approved service agent, British Gas, or other CORGI registered personnel.

The following instructions apply to the appliance and its controls, but it should be remembered that the central heating and the domestic hot water systems will also require attention from time to time.

6.2 ROUTINE ANNUAL SERVICING

Check the operation of the appliance and ensure it functions as described in section 7. Compare the performance of the appliance with its design specification. The cause of any noticeable deterioration should be identified and rectified without delay.

Thoroughly inspect the appliance for signs of damage or deterioration especially the flue system and the electrical apparatus.

Check and adjust – if necessary – all burner pressure settings. (See 7.3)

Check and adjust – if necessary – the system design pressure. (See 5.10)

Carry out an analysis of the flue gases (see 7.4), and visually check the condition of the entire flue assembly. Compare the results with the appliance design specification. Any deterioration in performance must be identified and rectified without delay.

Ensure both flue venturis are clean and free from any debris or obstruction.

Ensure both the burner and heat exchanger are clean and free from any debris or obstruction.

Inspect all joints for signs of leakage and repair if necessary.

Refer to the commissioning section and/or replacement of parts section for detailed instruction if required.

6.3 REPLACEMENT OF COMPONENTS

Although it is anticipated that this appliance will give years of reliable, trouble free service, the life span of components will be determined by factors such as operating conditions and usage. Should the appliance develop a fault, the fault finding section will assist in determining which component is malfunctioning.

6.4 COMPONENT REMOVAL PROCEDURE

To remove a component, access to the interior of the appliance is essential. Isolate the appliance from the electrical supply and remove the fuse. And when necessary, close all service valves on the appliance, remove the appliance casing as described in section 4.7.1, drain the water content from the appliance via the safety valve. Ensure some water absorbent cloths are available to catch any residual water that may drip from the appliance or removed component. Undertake a complete commissioning check as detailed in section 5, after replacing any component. **ALWAYS TEST FOR GAS SOUNDNESS IF ANY GAS CARRYING COMPONENTS HAVE BEEN REMOVED OR DISTURBED.**

6.5 PUMP HEAD fig. 18

Carry out component removal procedure as described in 6.4.
Using a 4mm Allen key or 'T' bar, unscrew and remove the four Allen screws that hold the pump in position, pull firmly on the pump head to release it from the base. Disconnect the electrical leads. Replace in the reverse order.

6.6 SAFETY VALVE fig. 18

Carry out component removal procedure as described in 6.4.
Disconnect the outlet pipe from the safety valve, unscrew and remove the hex bush from the safety valve outlet, remove safety valve locking pin from appliance manifold. Replace in the reverse order

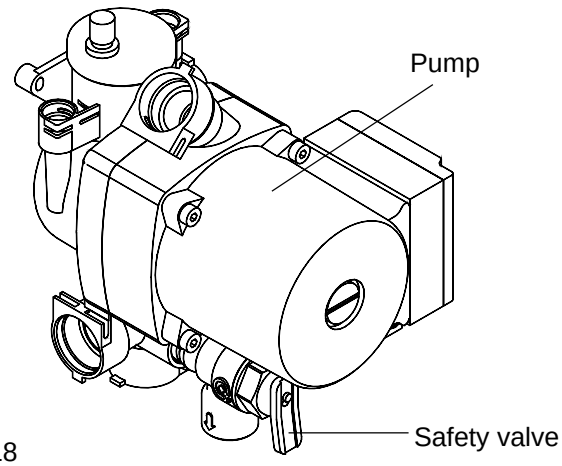

fig. 18

6.7 AUTOMATIC AIR RELEASE VALVE fig. 18 (AAV)

Carry out component removal procedure as described in 6.4.
Remove the locking pins from both the pressure gauge and expansion pipe connections from the pump base. Remove both the pressure gauge phial and expansion pipe from the pump base. Using a suitable pair of pump pliers, unscrew the AAV from the pump base. Replace in the reverse order.

6.8 WATER PRESSURE SWITCH fig. 19

Carry out component removal procedure as described in 6.4.
Remove locking pin and the water pressure switch from the heating manifold, and – after taking note of the electrical connections – disconnect the wiring. Replace in the reverse order.

fig. 19

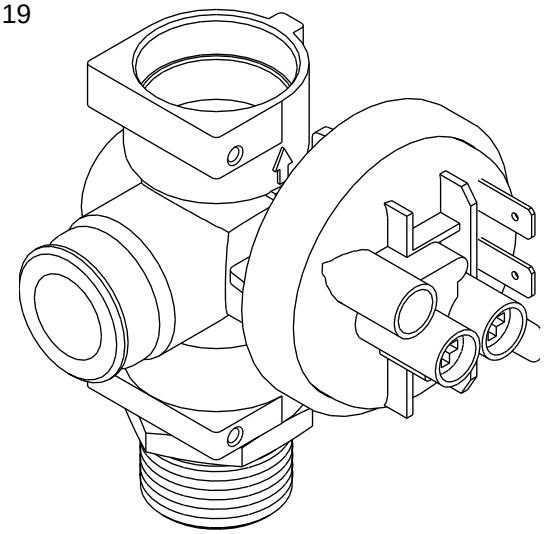

6.9 PRESSURE GAUGE

Carry out component removal procedure as described in 6.4.
Remove pressure gauge locking pin, located on pump base, and withdraw the pressure gauge pipe, locate the spring tabs on the pressure gauge body, push and hold tabs in, to enable extraction of the gauge from its location. Replace in the reverse order.

6.10 NTC THERMISTOR fig. 20

Carry out component removal procedure as described in 6.4.
Disconnect thermistor electrical plug. Using a 13mm spanner slacken and remove the thermistor and sealing washer. Replace in the reverse order.

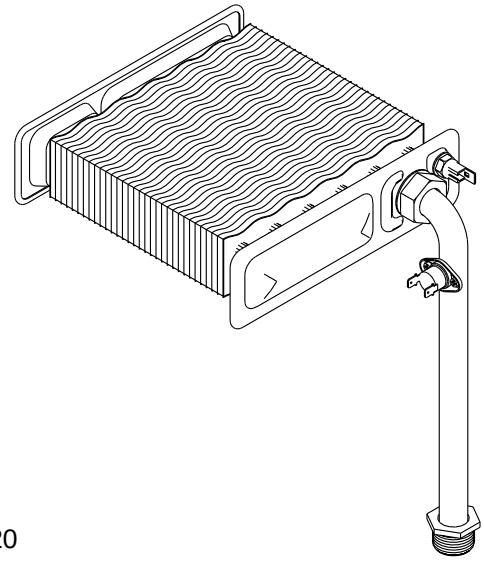

fig. 20

6.11 HIGH LIMIT THERMOSTAT fig. 20

Carry out component removal procedure as described in 6.4.
Pull off electrical connections from the high limit thermostat, slacken and remove retaining screws. Replace in reverse order.

6.12 PRINTED CIRCUIT BOARD (PCB)

Carry out component removal procedure as described in 6.4.
Locate and remove the five screws which secure the PCB cover & terminal cover, then remove cover, after carefully taking note of all wiring connections, disconnect all wiring from the PCB, locate and remove the PCB securing screws, remove PCB. Replace in the reverse order.

6.13 GAS VALVE fig. 21

Carry out component removal procedure as described in 6.4.
The gas valve must be changed as complete unit. Disconnect the electrical plug from the gas valve. Disconnect silicone tube from gas valve regulator. Slacken and unscrew gas valve inlet and outlet connections. **Please note**, the sealing washers must be discarded and replaced with new sealing washers. Locate and remove gas valve retaining screws on the underside of the boiler, the gas valve can now be removed. Replace in the reverse order. Check and adjust burner pressure settings. **WARNING, A GAS SOUNDNESS CHECK MUST BE CARRIED OUT.**

fig. 21

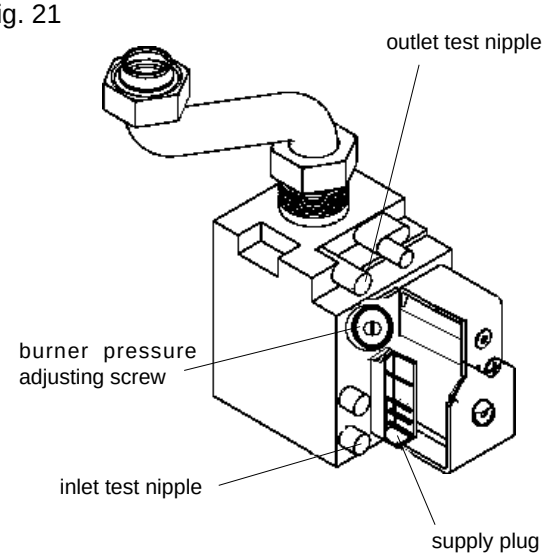

6.14 INTEGRAL TIME SWITCH (if fitted)

Carry out component removal procedure as described in 6.4.
Locate and remove the terminal cover and securing screws (2), locate and remove the time clock retaining screws, remove time clock. Disconnect wiring after carefully taking note of all electrical connections. Replace in the reverse order.

6.15 BURNER, INJECTORS, AND SPARK/SENSE ELECTRODE FIG. 22 & 22a

Carry out component removal procedure as described in 6.4.

Locate and remove the air chamber cover (held by 6 screws). Locate and remove the 6 screws securing the front combustion cover, pull the cover towards you before lifting and disengaging. Disconnect the electrode lead from its connector at the rear of the boiler. Locate and remove the four screws which secure the burner in position, gently ease the burner out of its location whilst also easing the electrode sealing grommet from its seating. Once the burner has been removed, locate the burner injectors – located to the rear of the combustion chamber – and remove (if necessary). Replace in the reverse order. Please note, the injector sealing washers must be replaced if the injectors have been removed, ensure all seals are in good condition, taking care to ensure they are replaced correctly.

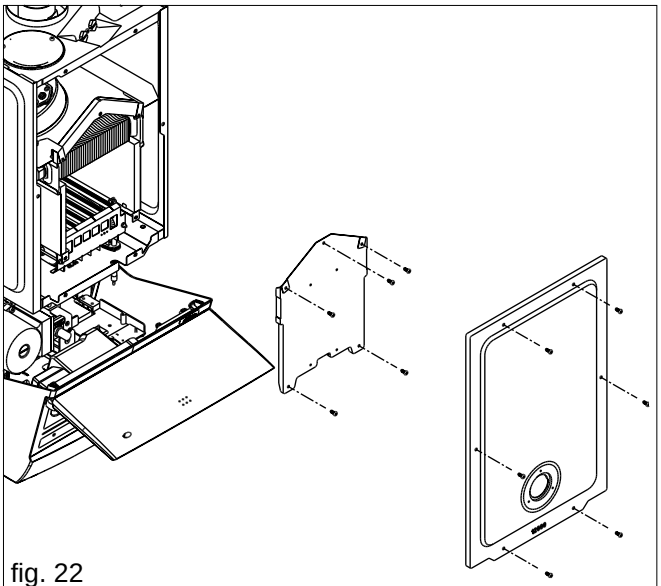

fig. 22

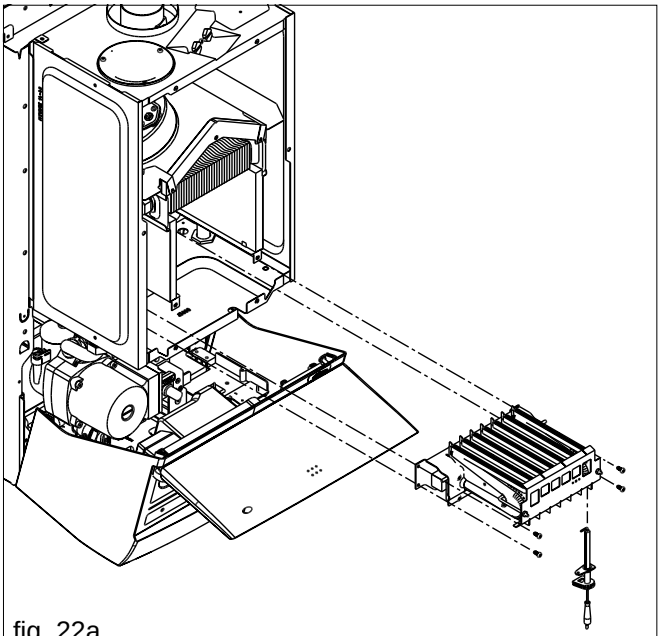

fig. 22a

6.16 FLUE FAN fig. 23

Carry out component removal procedure as described in 6.4.

Remove the air chamber cover by un-screwing the six screws which hold the cover, gently pull the cover towards you before lifting and disengaging. Locate and remove the six screws that secure the front combustion cover, then remove the cover. Disconnect the electrical connections and silicone tubes attached to the fan, noting their positions. Locate and remove the three screws that secure the flue hood, ease the fan & flue hood assembly from its location. Locate and remove the four screws that secure the fan to the flue hood. Replace in the reverse order. Ensure all seals are in good condition, taking care to ensure they are replaced correctly

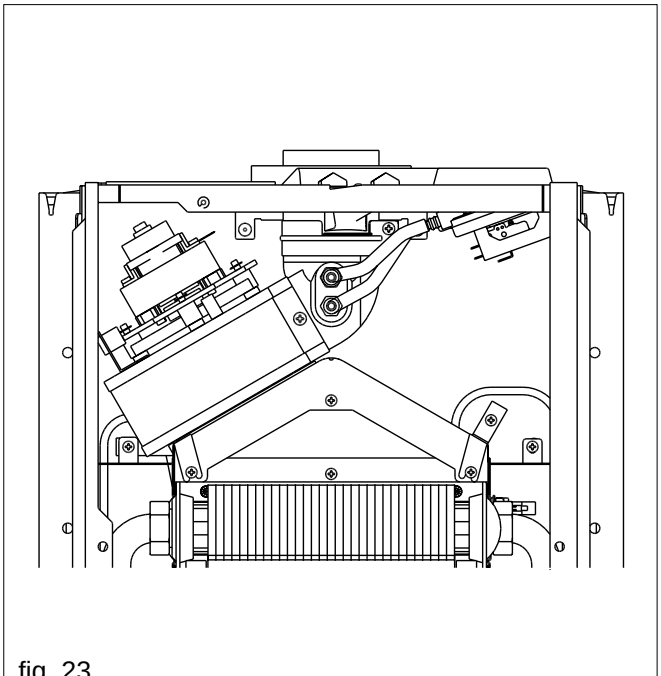

fig. 23

6.17 HEAT EXCHANGER fig. 24

Carry out component removal procedure as described in 6.4.

Remove the air chamber cover by un-screwing the six screws which hold the cover, gently pull the cover towards you before lifting and disengaging. Locate and remove the six screws that secure the front combustion cover, then remove the cover. Disconnect the flow and return connections on the heat exchanger. The heat exchanger can now be withdrawn from the appliance. Replace in the reverse order. Ensure all seals are in good condition, taking care to ensure they are replaced correctly.

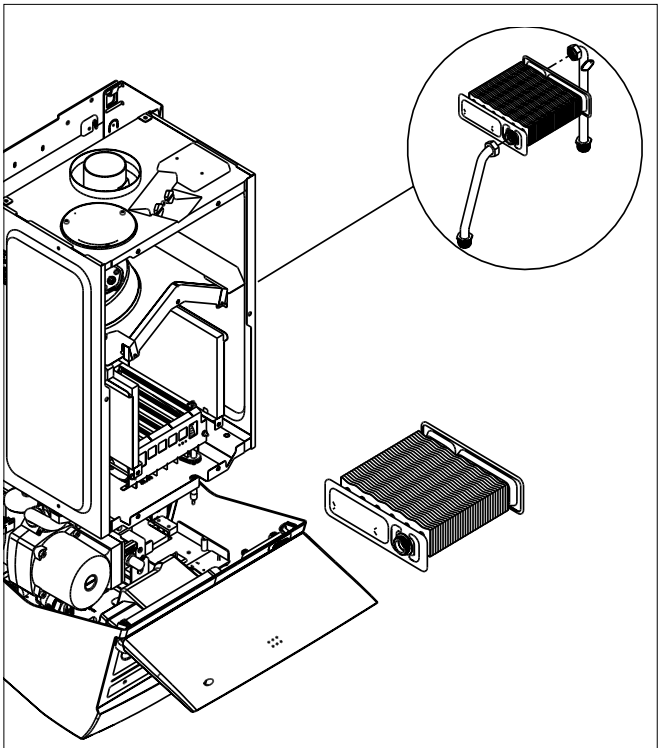

fig. 24

6.18 AIR PRESSURE SWITCH fig. 1

Carry out component removal procedure as described in 6.4.
Remove the air chamber cover by un-screwing the six screws which hold the cover, gently pull the cover towards you before lifting and disengaging. Locate and remove the two screws holding the air pressure switch to the air chamber. Disconnect the electrical connections and silicone tubes attached to the air pressure switch, noting their positions. Replace in the reverse order. Ensure all seals are in good condition, taking care to ensure they are replaced correctly.

6.19 EXPANSION VESSEL fig. 1

Due to the compact design of this appliance, removal and/or replacement of the expansion vessel may require the appliance to be removed from the wall, if this is deemed impractical, an external expansion vessel may be fitted to the return pipe as close to the appliance as possible.

6.19.1 EXPANSION VESSEL (removal)

Carry out component removal procedure as described in 6.4.
Disconnect the flue from the appliance.
Disconnect the expansion pipe from the vessel, slacken and remove the locknut that secures the lower part of the vessel to the appliance frame. Locate and remove the six screws that secure the vessel top holding plate, remove the plate. The expansion vessel can now be removed. Replace in the reverse order. Ensure all seals are in good condition, taking care to ensure they are replaced correctly.

7.1 CHECKING APPLIANCE OPERATION

When carrying out any repairs or servicing to the appliance, the relevant commissioning procedure must be undertaken to ensure the continued safe operation of the appliance. Particular attention should be made to ensure gas soundness, water soundness, and the electrical integrity of the appliance.

7.2 APPLIANCE MODE OF OPERATION

When there is a request for heat and/or hot water via the programmer/time clock and/or any external control, the pump and fan are started.

NOTE there must be sufficient system water pressure (min. 0.5 BAR) to ensure the water pressure switch is activated. If there is insufficient system pressure the pump and fan will be prevented from operating.

When the fan runs, it proves the differential air pressure switch which in-turn allows an ignition sequence to begin.

NOTE the ignition sequence lasts approximately 5 seconds, during which the appliance will continue to spark even if the burner has already lit.
If the spark/sensing electrode does not sense ignition the appliance will then go to lockout.

Ignition is sensed by the electronic circuitry to ensure flame stability at the burner. Once successful ignition has been achieved, the electronic circuitry allows full gas rate through the appliance.

When the appliance reaches the desired temperature the burner will shut down and the boiler will perform a three-minute anti-cycle (timer delay).

NOTE the timer delay can be de-activated by the insertion of a 'jumper' on the PCB or by isolating the appliance from the electrical supply from 30 seconds.

When the request for heat and/or hot water has been satisfied the appliance pump will continue to circulate for a period of 30 seconds to dissipate any residual heat within the appliance.

7.3 CHECKING AND ADJUSTING BURNER PRESSURE (see fig. 17 & 17a)

Although the burner pressure is factory set, it is necessary to check it during servicing or if the gas valve has been removed.
Isolate the appliance from the electrical supply and attach a suitable manometer to the gas valve outlet test nipple.

Light the boiler as described in 5.6 and compare the reading on the manometer with the value described in fig. 17a. If adjustment is required remove the compensator tube from the gas valve regulator.

Locate and remove the protective screwed cap that covers the burner pressure adjusting screw. Adjust the screw clockwise to increase the pressure or anti-clockwise to reduce.

Once the pressure has been adjusted, isolate the appliance from the electrical supply, replace the protective screwed cap, refit the compensator tube, remove the manometer, and tighten the outlet test nipple.

IMPORTANT, A GAS SOUNDNESS CHECK MUST BE CARRIED OUT.

7.4 COMBUSTION ANALYSIS TEST

A combustion analysis check can easily be carried out on the appliance via the test points located on the top of the appliance, however you must check that the burner pressure is set at maximum (see 7.3).

	10e	14e	20e
CO	80ppm	60ppm	160ppm
CO2	4.8%	7.0%	6.0%

7.5 CHECKING THE EXPANSION VESSEL

Carry out the component removal procedure as described in 6.4. You must ensure that the boiler is completely drained of water.
Using a suitable pressure gauge, remove dust cap on expansion vessel and check the charge pressure. The correct charge pressure should be 0.8 BAR ± 0.1 BAR.
If the charge pressure is less, use a suitable pump to increase the charge.

EXPANSION VESSEL Cont'd.
Please note, you must ensure the safety valve is in the open position whilst re-charging takes place. Replace the dust cap and carry out the relevant commissioning procedure (section 5).

7.6 EXTERNAL FAULTS

Before carrying out any fault finding or component replacement, ensure the fault is not attributable to any aspect of the installation.
For example, external wiring fault, service valves closed, reversed polarity, gas supply turned off, etc.

7.6.1 INSTALLATION FAULTS

FAULT	POSSIBLE CAUSES	REMEDY/ACTION
Appliance fires then lockouts	Incorrect gas pressure Flue blocked or broken	Check incoming gas supply Inspect flue system
Appliance wont fire	External wiring fault Insufficient system pressure Blown fuse	Disconnect external wiring and fit link between 1 & 2 Ensure pressure gauge is above 0.5 BAR Check and replace
Appliance stays fired after time clock/programmer has switched off	External wiring fault Faulty motorised valve	Check wiring and or disconnect external wiring
Appliance fires but no circulation	Service valves closed Defective motorised valve Defective external wiring Air in system/boiler	Open service valves! Check operation Check wiring Check dust cap on AAV Vent system & radiators

7.7 ELECTRICAL CHECKS

Any electrical checks must be carried out by a suitably qualified person.

7.7.1 EARTH CONTINUITY TEST

Isolate the appliance from the electrical supply, and using a suitable multi-meter carry out a resistance test. Connect test leads between an appliance earth point and the earth wire of the appliance supply cable. The resistance should be less than 1 OHM. If the resistance is greater than 1 OHM check all earth wires and connectors for continuity and integrity.

7.7.2 SHORT CIRCUIT CHECK

Isolate the appliance from the electrical supply, and using a suitable multi-meter, carry out a short circuit test between the Live & Neutral connections at the appliance terminal strip (fig.16).
Repeat above test on the Live & Earth connections at the appliance terminal strip. (Fig.16)
NOTE
Should it be found that the fuse has failed but no fault is indicated, a detailed continuity**.**
Check will be required to trace the fault. A visual inspection of components may also assist in locating the fault.

7.7.3 POLARITY CHECK

With the appliance connected to the electrical supply and using a suitable multimeter, carry out the following voltage tests:
Connect test leads between the Live & Neutral connections at the appliance terminal strip. (fig.16) The meter should read approximately 230V ac. If so proceed to next stage. If not, see 7.7.4.
Connect test leads between the Live & Earth connections at the appliance terminal strip. (fig.16) the meter should read approximately 230V ac. If so proceed to next stage. If not, see 7.7.4.
Connect test leads between the Neutral & Earth connections at the appliance terminal strip. (fig.16) the meter should read approximately 0 – 15Vac. If so polarity is correct. If not, see 7.7.4.

7.7.4 REVERSED POLARITY OR SUPPLY FAULT

Repeat the above tests at the appliance isolator, if testing reveals correct polarity and/or supply at the isolator, re-check wiring and connections between the isolator and the appliance.
If tests on the isolator also reveal reversed polarity or a supply fault, consult the local electricity supplier for advice.

7.7.5 RESISTANCE TO EARTH CHECK

Isolate the appliance from the electrical supply, and using a suitable multi-meter carry out a resistance test. Connect test leads between the Live & Earth connections at the appliance terminal strip. (fig.9a) If the meter reads other than infinity there is a fault that must be isolated, carry out a detailed continuity check to identify the location of the fault.

IMPORTANT
These series of checks must be carried out before attempting any fault finding procedures on the appliance. On completion of any task that required the disconnection and re-connection of any electrical wiring or component, these checks must be repeated.

THE FOLLOWING CHECKS MUST BE CARRIED OUT BEFORE ATTEMPTING ANY INTERNAL FAULT FINDING:

- Ensure system pressure is 0.5 bar or above
- Carry out routine electrical checks
- Disconnect external controls from appliance and insert link-wire between terminals 1 & 2
- Fit 'jumper' to JP1 to cancel timer delay if necessary
- Turn boiler thermostat to maximum
- Reset boiler mode switch if required

IF THE BOILER WILL NOT RESET CHECK THE FOLLOWING:

- Resistance of NTC thermistor and/or continuity of wiring
- Continuity through mode selector switch
- PCB

Initial electrical check

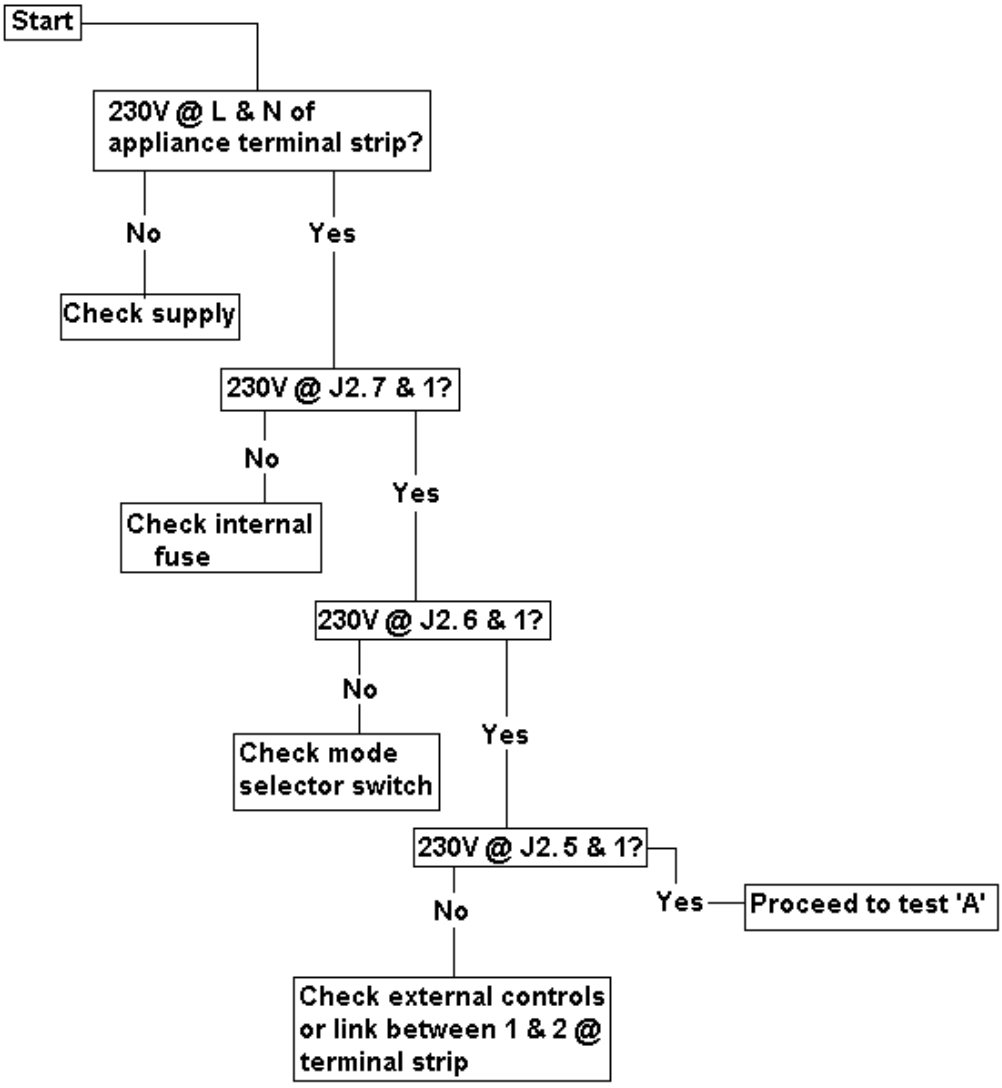

test 'A'

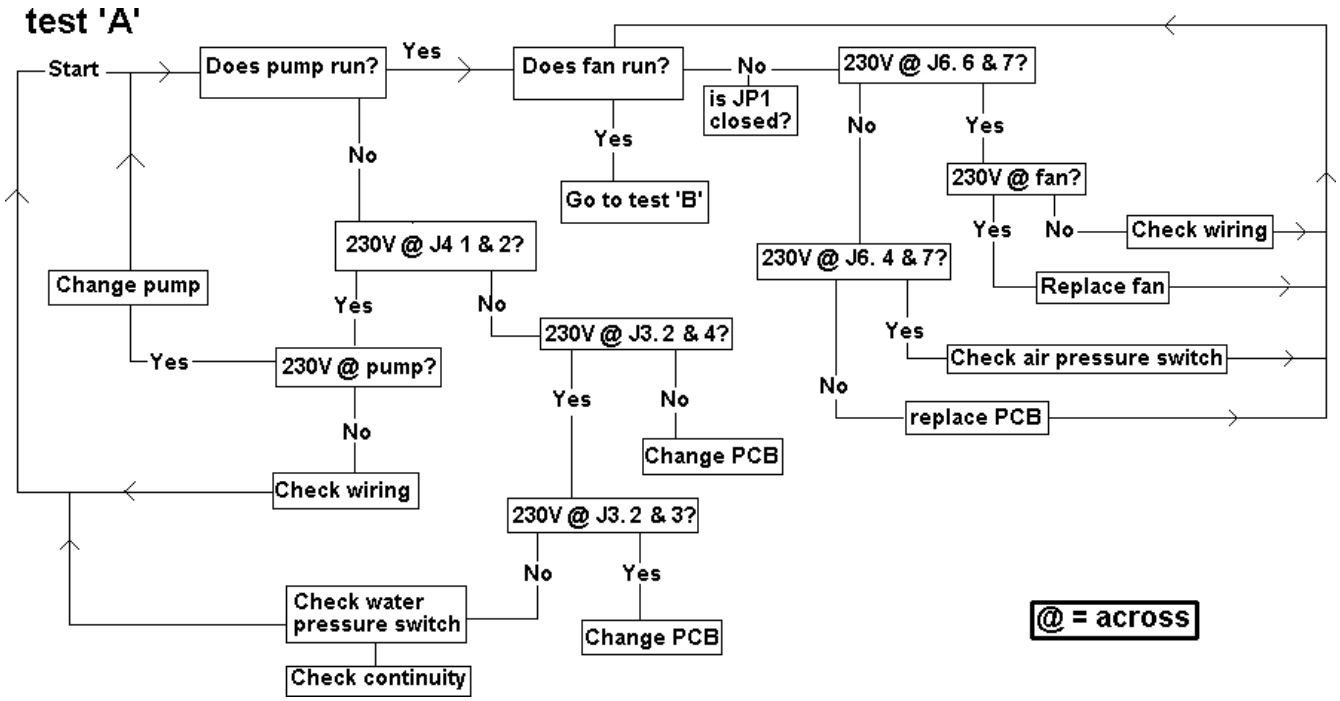

test 'B'

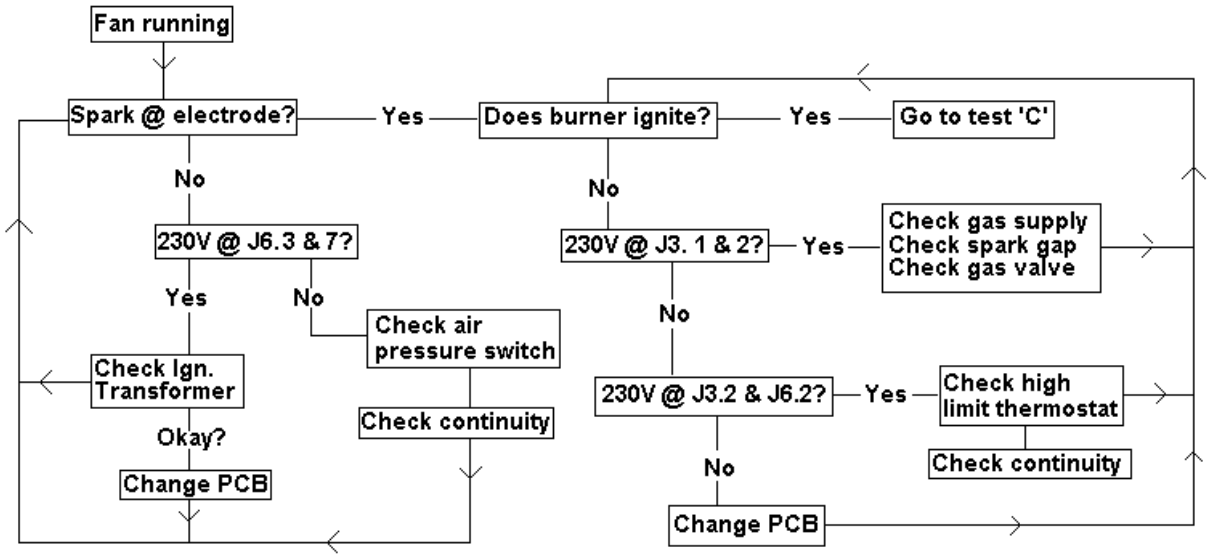

test 'C'

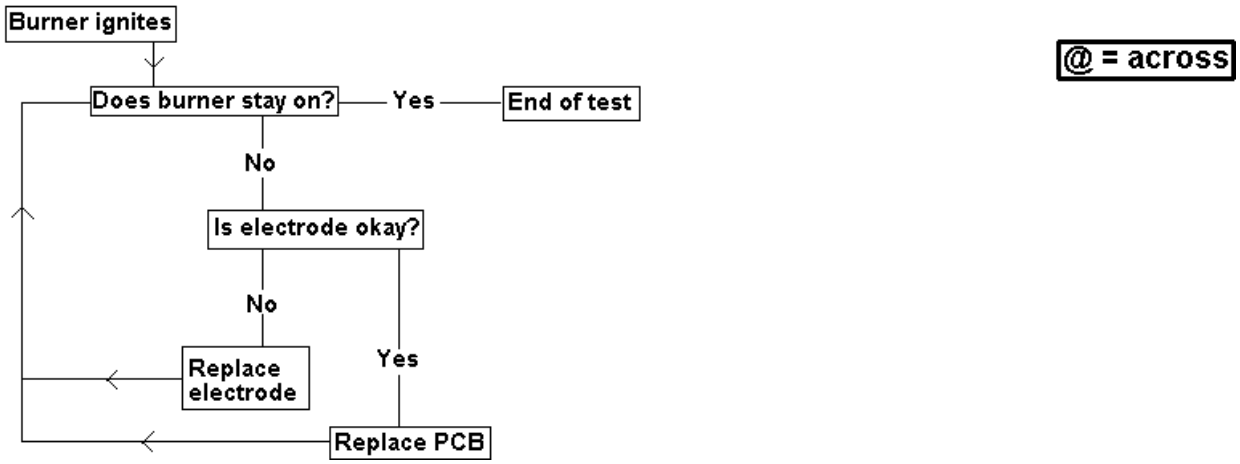

8.1 'Y' PLAN USING AN EXTERNAL PROGRAMMER

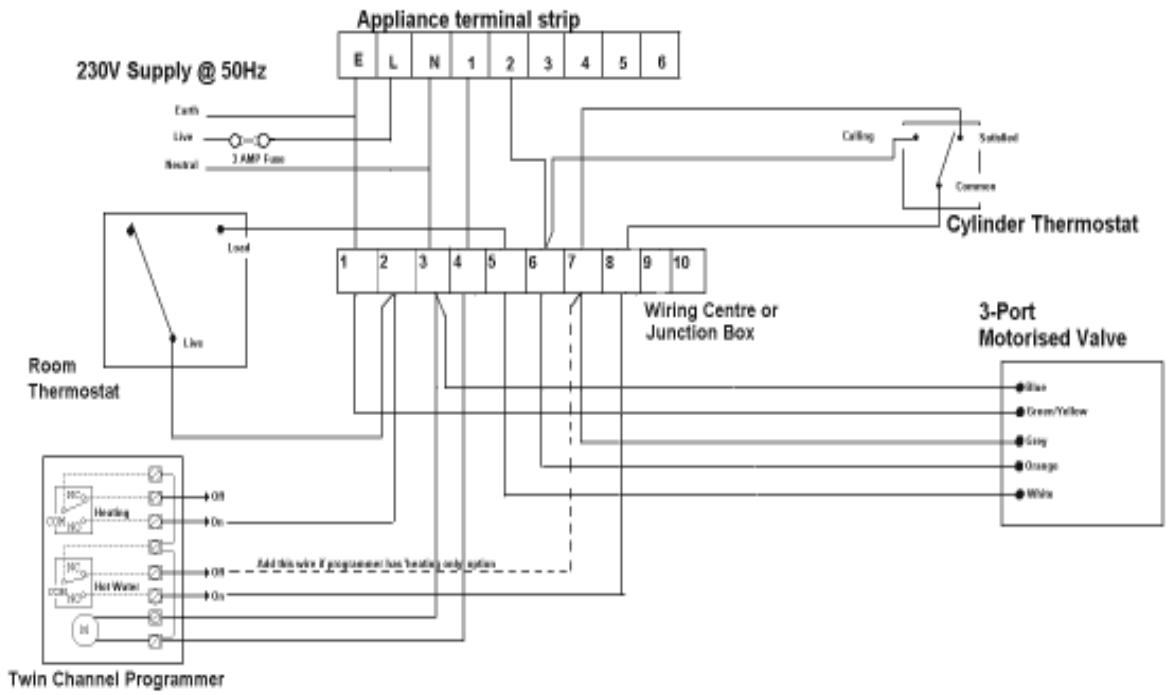

8.2 'S' PLAN WITH EXTERNAL PROGRAMMER

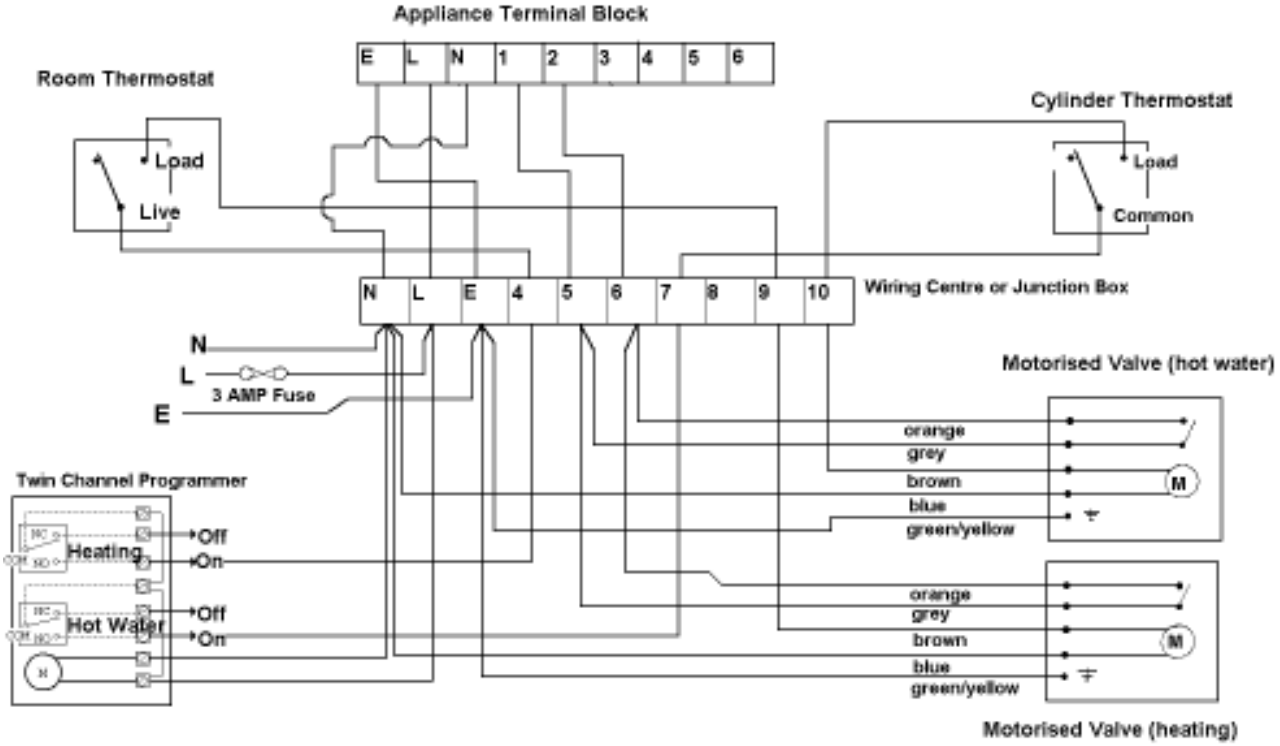

8.3 'Y' PLAN WITH VOKERA TWIN CHANNEL PROGRAMMER
(See 8.6 for instructions)

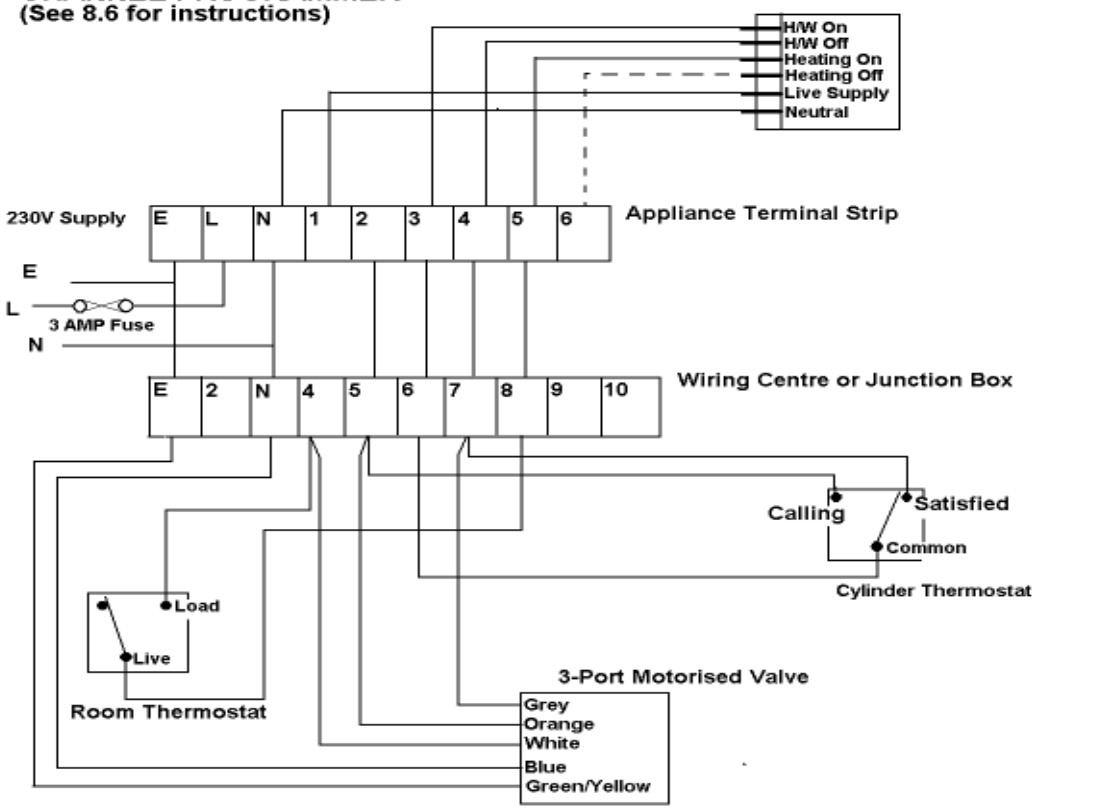

8.4 'S' PLAN WITH VOKERA TWIN CHANNEL PROGRAMMER
(See 8.6 for instructions)

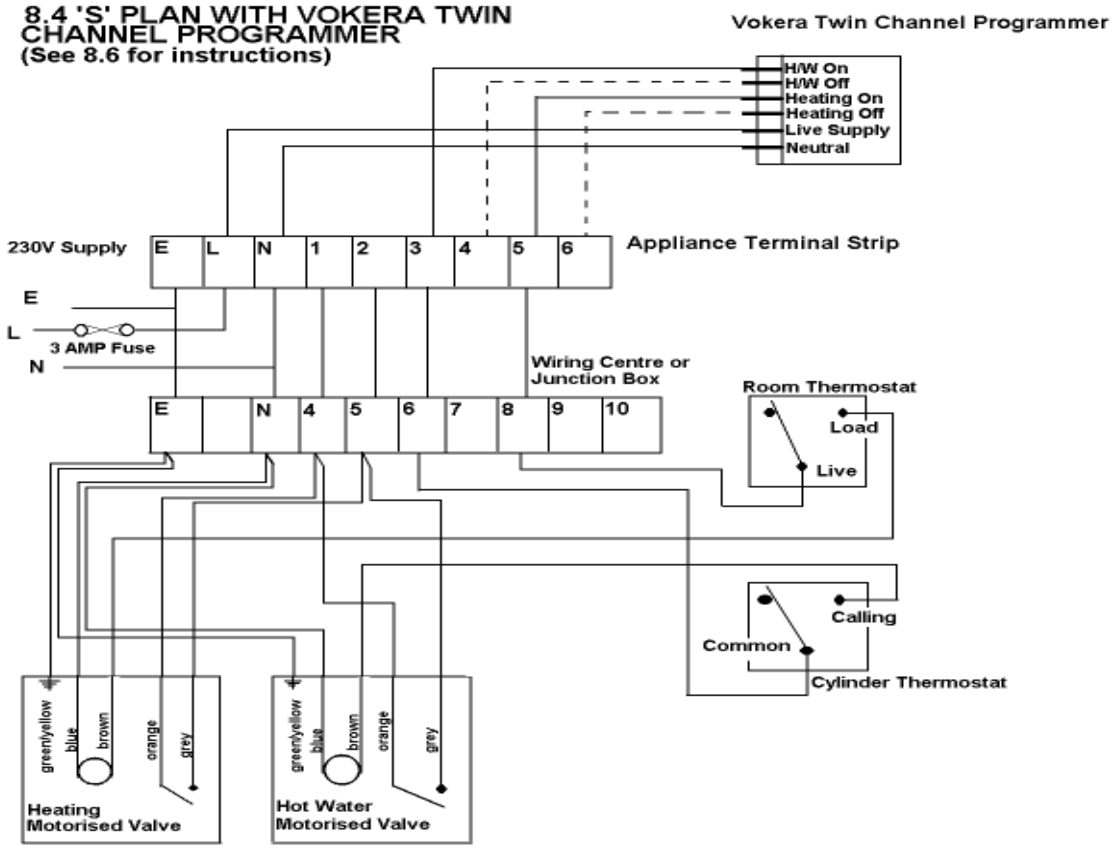

8.5 INSTALLATION OF VOKERA TIME CLOCK (24 hour & 7 day versions).

- Isolate the appliance from the electrical supply and remove the casing as described in 4.7.1.
- Remove the circular blanking disc from the clock aperture plate.
- Remove the terminal strip cover from the appliance.
- Connect the wires to the clock as shown in fig.24.
- Mount the clock to the clock aperture plate using the screws provided.
- Remove the factory fitted link between terminals 1 & 2 on the appliance terminal strip.
- Connect the clock wires to the appliance terminal strip as shown in fig. 24
- Replace the terminal cover and casing once the clock installation has been completed.

8.6 INSTALLATION OF VOKERA TWIN CHANNEL PROGRAMMER

- Isolate the appliance from the electrical supply and remove the casing as described in 4.7.1.
- Remove the circular blanking disc from the clock aperture plate.
- Remove the terminal strip cover from the appliance PCB cover.
- Remove the factory fitted link between terminals 1 & 2 on the appliance terminal strip.
- Take the wires supplied with the programmer and connect them as shown in fig. 25.
- Mount the clock to the clock aperture plate using the screws provided.
- Connect any external controls as detailed in 8.3 or 8.4.
- Replace the terminal cover and casing once the programmer installation has been completed.

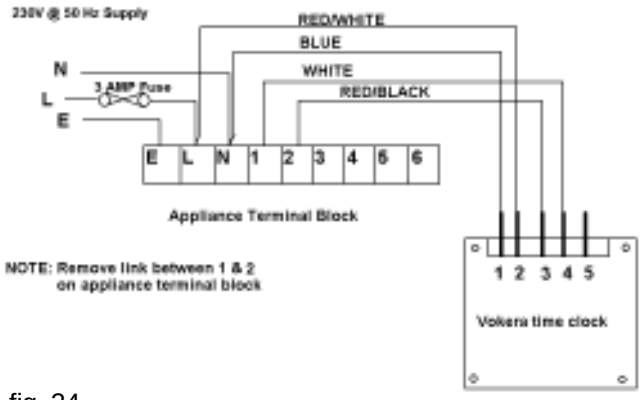

fig. 24

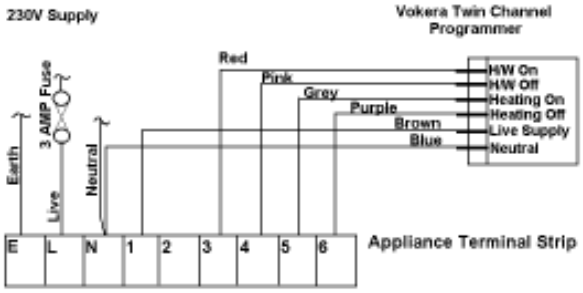

fig. 25

NOTE

If the connection of a room thermostat is also required, the spare terminals on the appliance terminal strip can be used for this purpose.

If an external time clock is preferred, it must have 'voltage free connections'. This appliance requires a permanent electrical supply.

NOTE

The appliance and integral programmer must be connected as described in these instructions, to ensure the safe and correct operation of this appliance.

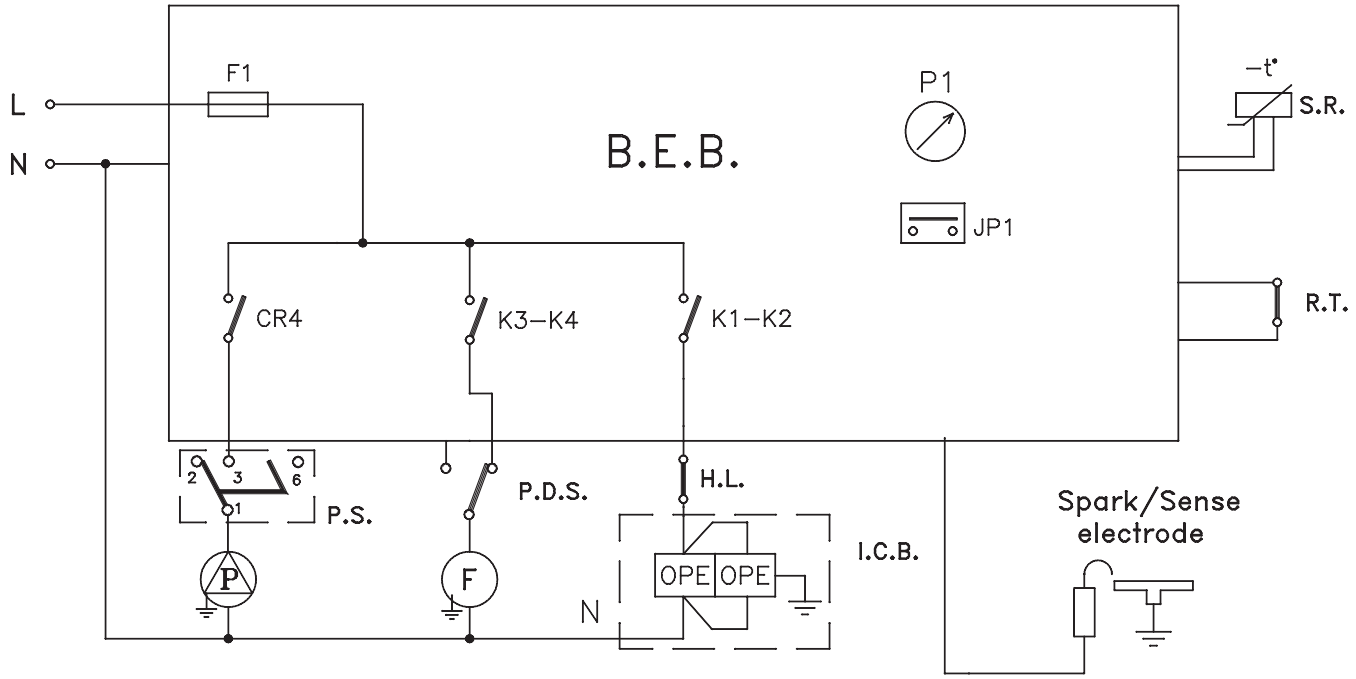

R.T.	Room thermostat
P.S.	Pressure switch
H.L.	High limit switch
S.R.	Heat thermistor
F	Fan
P	Pump
SP\SE E.	Spark\Sense electrode
OPE	Gas valve solenoids
I.C.B.	Ignition control board
B.E.B.	Boiler control board
CR4	Pump triac
K3-K4	Fan relays
K1-K2	Ignition relays
LD1	Led alarm (red)
D.P.S.	Differential pressure switch
L	Line
N	Neutral
P1	Heat control potenziometer
JP1	Timer jumper
F1	Fuse

NOTE: L-N-E CONNECTION IS ADVISABLE

ROOM THERMOSTAT IS 230 V.A.C.

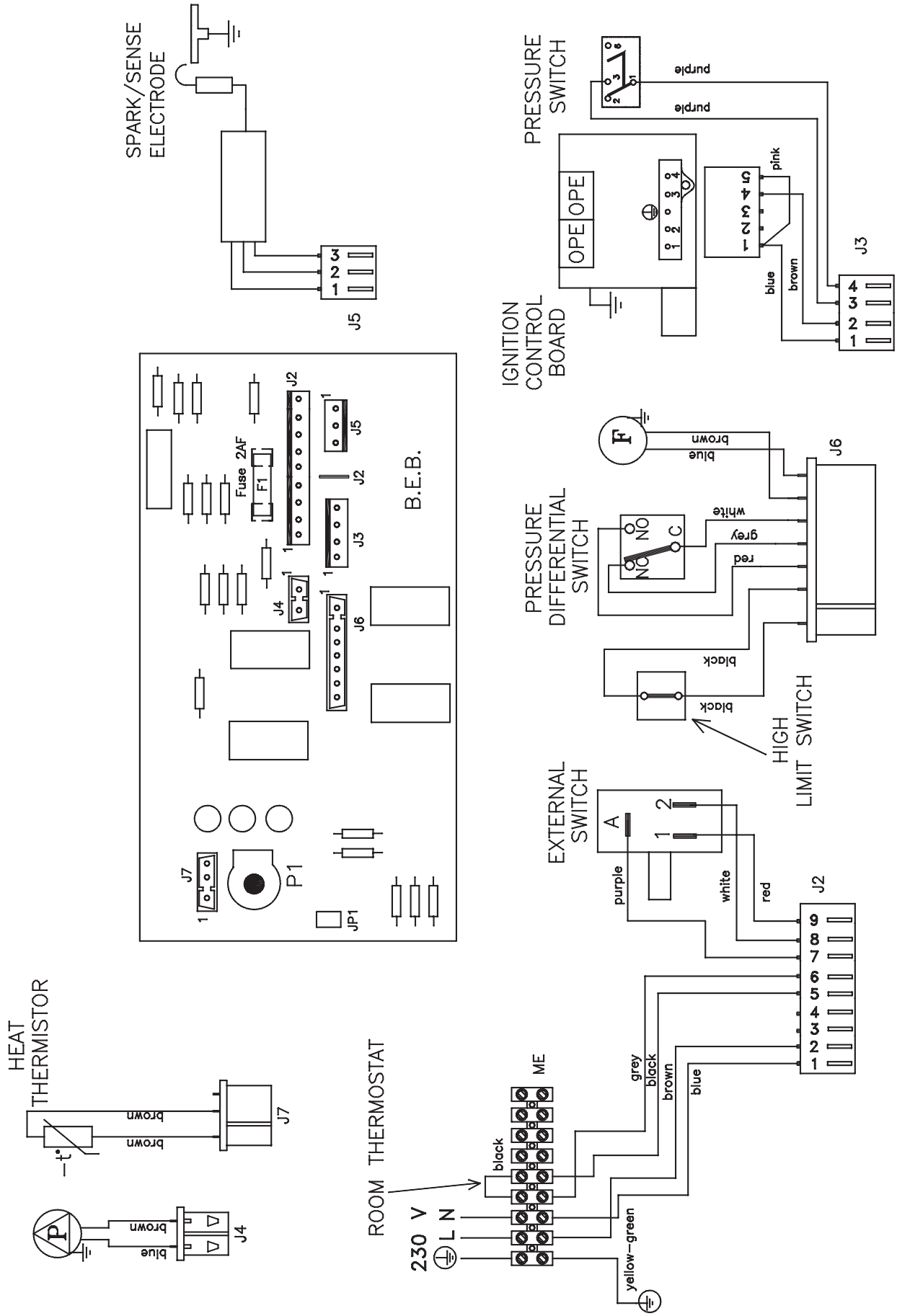

SECTION 9: EXPLODED DIAGRAMS

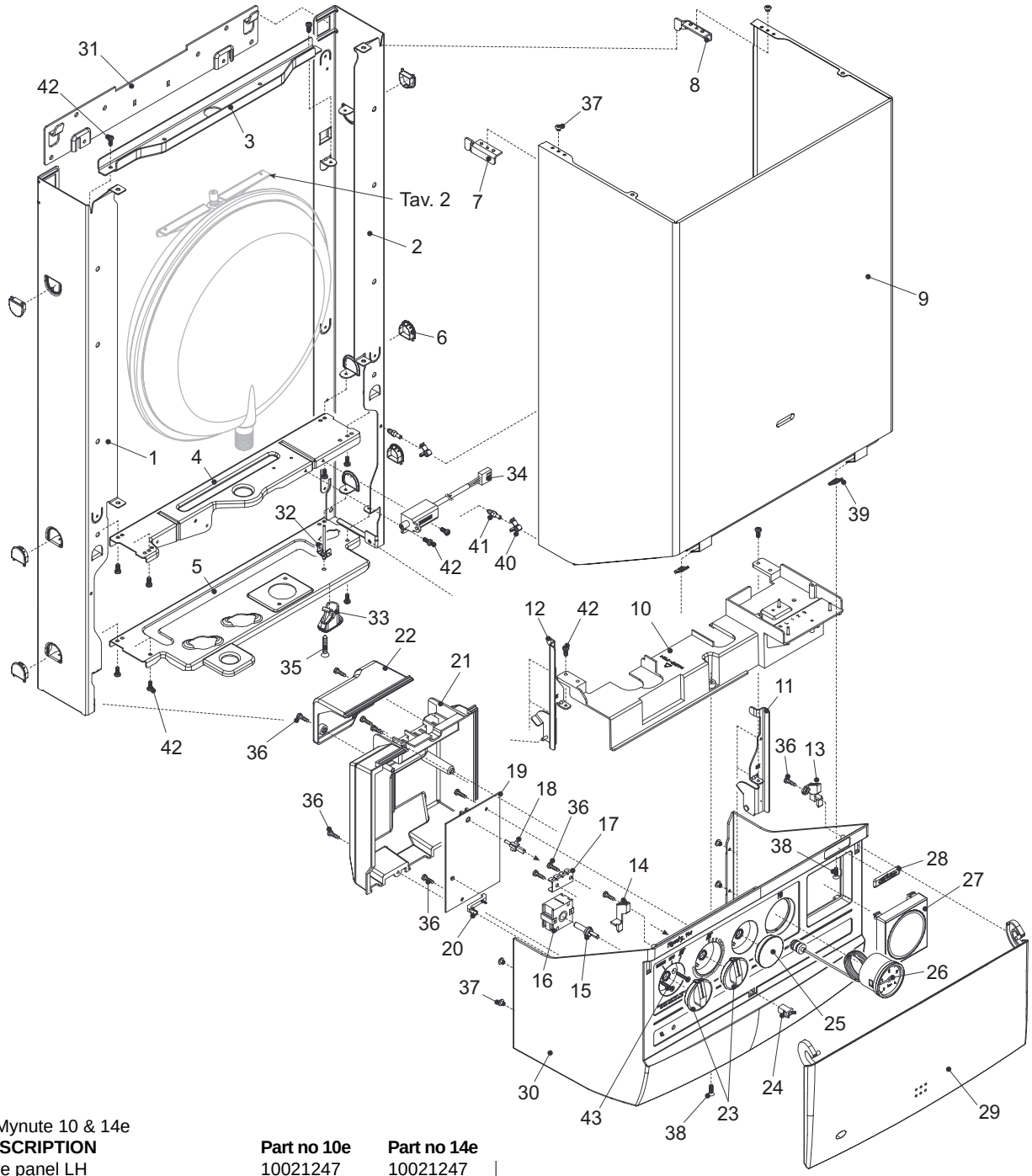

Table 1 Mynute 10 & 14e

KEY	DESCRIPTION	Part no 10e	Part no 14e
1	Side panel LH	10021247	10021247
2	Side panel RH	10021245	10021245
3	Top transverse panel (10e,14e)	10021250	10021250
4	Lower transverse panel	10020951	10020951
5	Distribution panel	10021249	10021249
6	Insert	2127	2127
7	Upper casing hook LH	1882	1882
8	Upper casing hook RH	1881	1881
9	White casing	10020973	10020973
10	Wiring tray	10021233	10021233
11	Control panel strengthener RH	7787	7787
12	Control panel strengthener LH	7788	7788
13	Lower control panel hook RH	10020967	10020967
14	Lower control panel hook LH	10020968	10020968
15	Selector switch extension shaft	10021263	10021263
16	Selector switch	9461	9461
17	Earthing strip	10021484	10021484
18	Thermostat extension shaft	2785	2785
19	PCB	10021984	10021984
20	LED lens	10021267	10021267
21	PCB cover	10021265	10021265
22	Terminal block cover	10021266	10021266
23	Thermostat/mode switch knob	10021264	10021264

KEY	DESCRIPTION	Part no 10e	Part no 14e
24	Plastic catch	1864	1864
25	Blanking disc	1609	1609
26	Pressure gauge	2468	2468
27	Clock blanking plate	8654	8654
28	Vokera logo	1978	1978
29	Front flap	10020966	10020966
30	Controls/fascia panel	10021260	10021287
31	Wall mounting bracket	10021273	10021273
32	Rivet (for earth terminal)	5037	5037
33	Cable entry	5371	5371
34	Ignition transformer	10021272	10021272
35	Self threading screw 4.8mm x 25mm	5171	5171
36	Self threading screw 3.5mm x 12mm	5240	5240
37	Rivet 3.2mm x 7mm	5093	5093
38	Self threading screw 3.9mm x 13mm	5199	5199
39	Edge clip	5128	5128
40	Casing clip	5588	5588
41	Locating stud	5589	5589
42	Self threading screw 3.9mm x 9.5	5079	5079
43	Self threading screw 3.5mm x 12mm	5193	5193

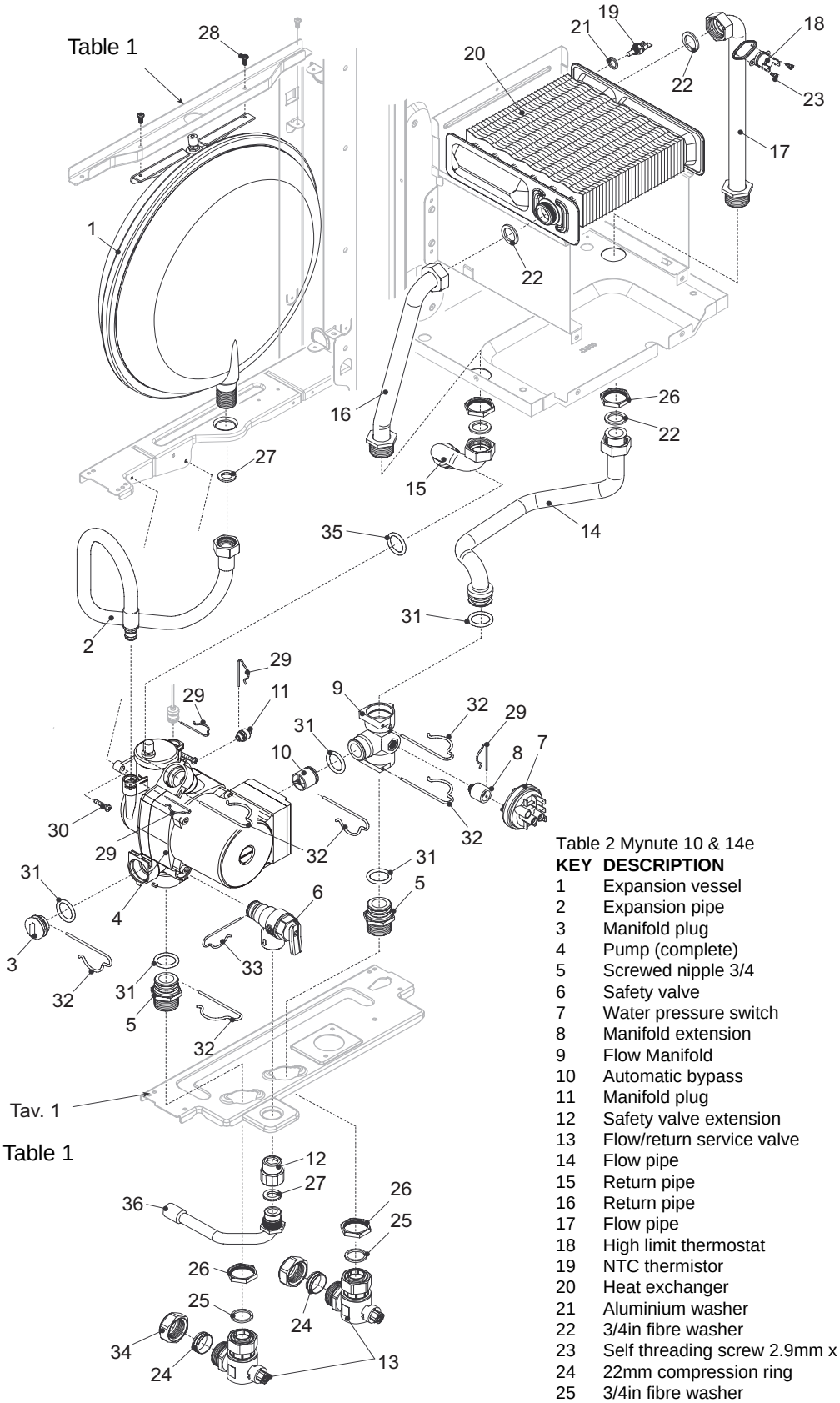

Table 2 Mynute 10 & 14e

KEY	DESCRIPTION	Part no 10e	Part no 14e
1	Expansion vessel	10020840	10020840
2	Expansion pipe	2164	2164
3	Manifold plug	2261	2261
4	Pump (complete)	2225	2225
5	Screwed nipple 3/4	2217	2217
6	Safety valve	1806	1806
7	Water pressure switch	2044	2044
8	Manifold extension	10021251	10021251
9	Flow Manifold	10020621	10020621
10	Automatic bypass	2047	2047
11	Manifold plug	2216	2216
12	Safety valve extension	2260	2260
13	Flow/return service valve	1789	1789
14	Flow pipe	10021259	10021259
15	Return pipe	10021258	10021258
16	Return pipe	10021256	10021256
17	Flow pipe	10021257	10021257
18	High limit thermostat	8367	8367
19	NTC thermistor	8484	8484
20	Heat exchanger	10021231	10021231
21	Aluminium washer	5041	5041
22	3/4in fibre washer	5023	5023
23	Self threading screw 2.9mm x 6.5mm	5077	5077
24	22mm compression ring	1822	1822
25	3/4in fibre washer	5070	5070
26	3/4in locknut	4026	4026
27	1/2in Fibre washer	5026	5026
28	Self threading screw 3.9mm x 9.5mm	5079	5079
29	Locking pin	2165	2165
30	Self threading screw 3.9mm x 19mm	5081	5081
31	‘o’ ring	6898	6898
32	Locking pin	2223	2223
33	Locking pin	2222	2222
34	Nut	1824	1824
35	O-ring	7999	7999
36	Pre-formed pipe	10021906	10021906

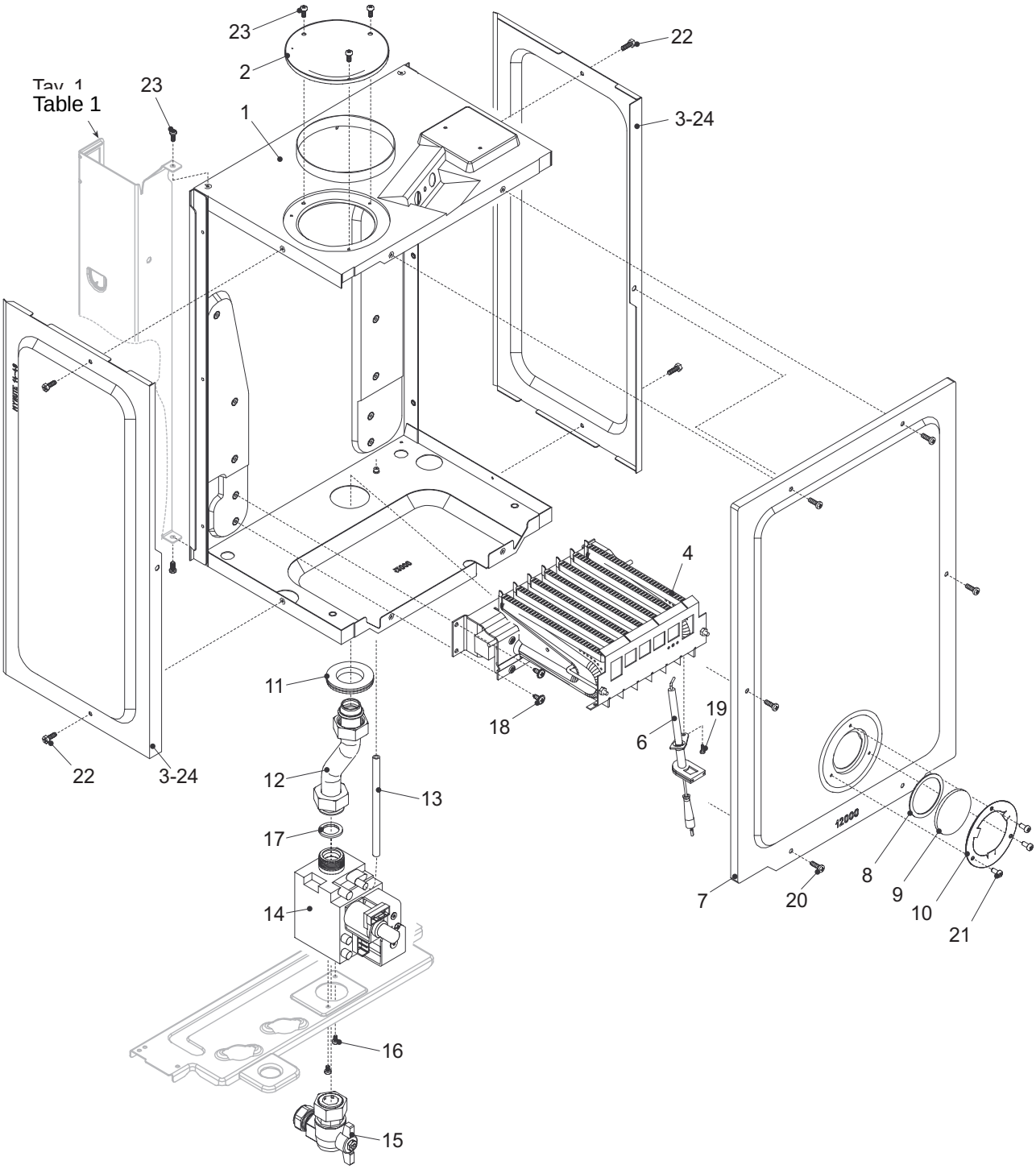

Table 3 Mynute 10 & 14e

KEY	DESCRIPTION	Part no 10e	Part no 14e
1	Air chamber	10021252	10021252
2	Blanking disc	8084	8084
3	Air chamber side panel	7832	7832
4	Burner Nat. Gas	2801	7623
	Burner LPG	2802	7624
6	Spark electrode	10021255	10021255
7	Air chamber front panel	5957	5957
8	Sight glass gasket	5072	5072
9	Sight glass	3139	3139
10	Sight glass retaining ring	4007	4007
11	Gasket	5927	5927
12	Gas valve outlet pipe	10021254	10021254

KEY	DESCRIPTION	Part no 10e	Part no 14e
13	Compensator tube	1457	1457
14	Gas valve	10021253	10021253
15	Gas cock	10020897	10020897
16	Gas valve securing screws	5105	5105
17	3/4in fibre washer	5023	5023
18	Self threading screw 3.9mm x 9.5mm	5212	5212
19	Self threading screw 2.9mm x 9.5mm	5169	5169
20	Self threading screw 3.9mm x 13mm	5080	5080
21	Rivet 2.9mm x 7mm	5222	5222
22	Self threading screw 3.9mm x 9.5mm	5180	5180
23	Self threading screw 3.9mm x 9.5mm	5079	5079
24	Air chamber seal	5905	5905

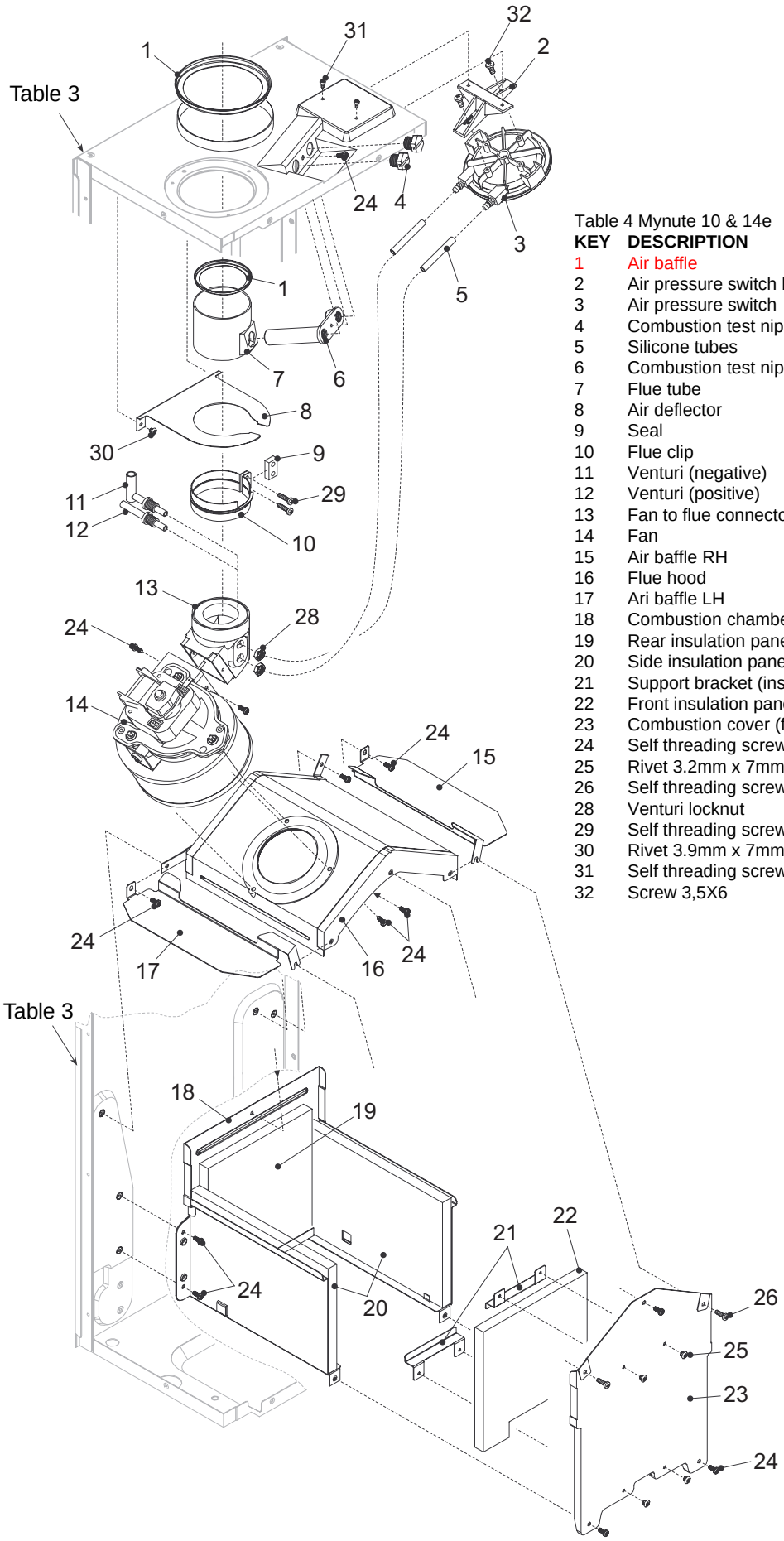

Table 4 Mynute 10 & 14e

KEY	DESCRIPTION	Part no 10e	Part no 14e
1	Air baffle	10021702	10021702
2	Air pressure switch bracket	9233	9233
3	Air pressure switch	9232	9232
4	Combustion test nipple screw	8086	8086
5	Silicone tubes	1457	1457
6	Combustion test nipple	8085	8085
7	Flue tube	1141	1141
8	Air deflector	2928	2928
9	Seal	5917	5917
10	Flue clip	1140	1140
11	Venturi (negative)	7948	7948
12	Venturi (positive)	6985	6985
13	Fan to flue connector	7779	7779
14	Fan	5963	5963
15	Air baffle RH	2820	2820
16	Flue hood	5958	5958
17	Ari baffle LH	2821	2821
18	Combustion chamber	6026	6026
19	Rear insulation panel	5962	5962
20	Side insulation panel	5271	5271
21	Support bracket (insulation panel)	5279	5279
22	Front insulation panel	5961	5961
23	Combustion cover (front)	2819	2819
24	Self threading screw 3.9mm x 13mm	5079	5079
25	Rivet 3.2mm x 7mm	5093	5093
26	Self threading screw 3.9mm x 13mm	5080	5080
28	Venturi locknut	4807	4807
29	Self threading screw 3.9mm x 19mm	5081	5081
30	Rivet 3.9mm x 7mm	5094	5094
31	Self threading screw 3.9mm x 6.5mm	5077	5077
32	Screw 3,5X6	5145	5145

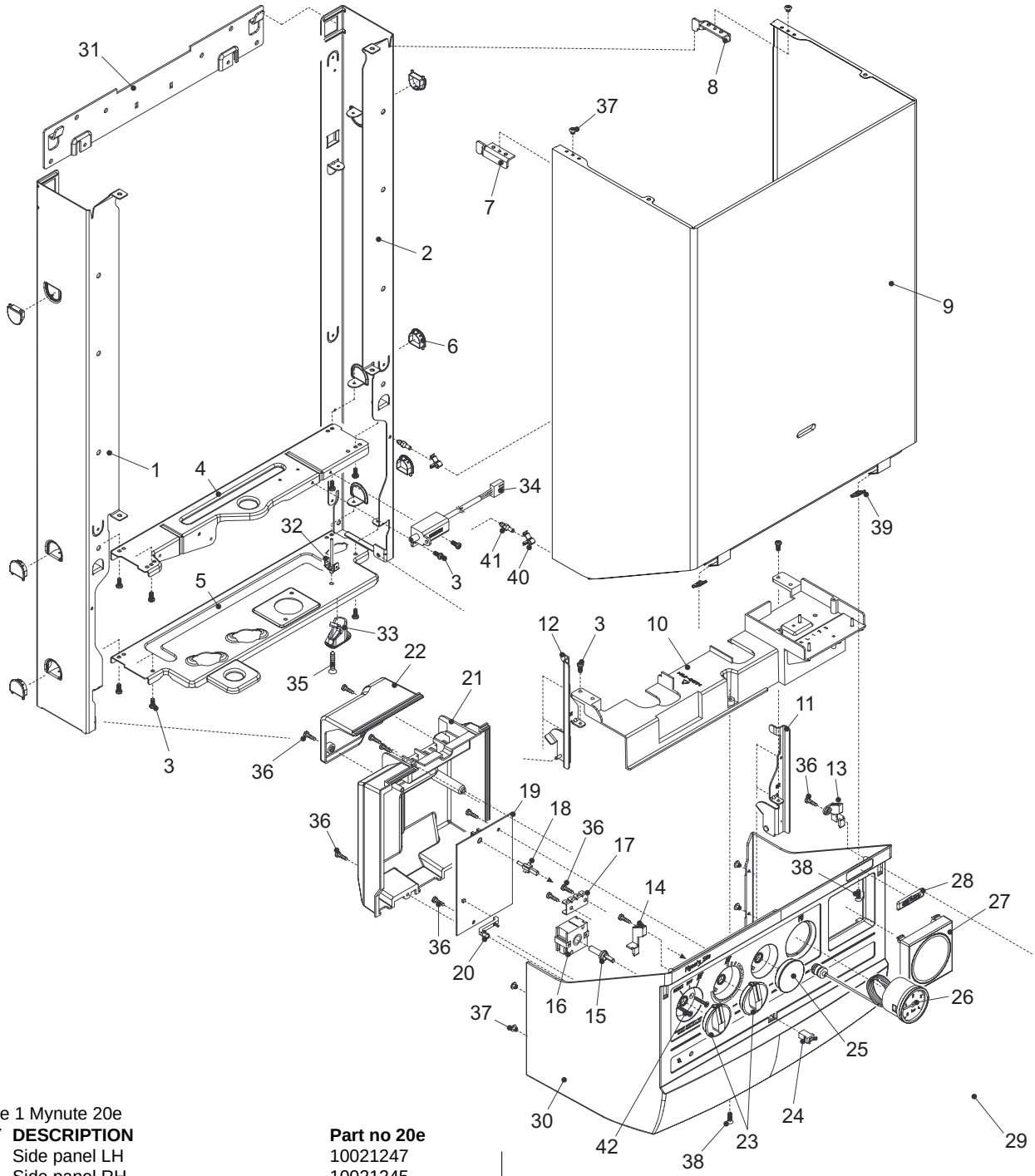

Table 1 Mynute 20e

KEY	DESCRIPTION	Part no 20e
1	Side panel LH	10021247
2	Side panel RH	10021245
3	Self threading screw 3.9mm x 9.5mm	5079
4	Lower transverse panel	10020951
5	Distribution panel	10021249
6	Insert	2127
7	Upper casing hook LH	1882
8	Upper casing hook RH	1881
9	White casing	10020973
10	Wiring tray	10021233
11	Control panel strengthener RH	7787
12	Control panel strengthener LH	7788
13	Lower control panel hook RH	10020967
14	Lower control panel hook LH	10020968
15	Selector switch extension shaft	10021263
16	Selector switch	9461
17	Earthing strip	10021484
18	Thermostat extension shaft	2785
19	PCB	10021984
20	LED lens	10021267
21	PCB cover	10021265
22	Terminal block cover	10021266
23	Thermostat/mode switch knob	10021264

KEY	DESCRIPTION	Part no 20e
24	Plastic catch	1864
25	Blanking disc	1609
26	Pressure gauge	2468
27	Clock blanking plate	8654
28	Vokera logo	1978
29	Front flap	10020966
30	Controls/fascia panel	10021291
31	Wall mounting bracket	10021273
32	Rivet (for earth terminal)	5037
33	Cable entry	5371
34	Ignition transformer	10021272
35	Self threading screw 4.8mm x 25mm	5171
36	Self threading screw 3.5mm x 12mm	5240
37	Rivet 3.2mm x 7mm	5093
38	Self threading screw 3.9mm x 13mm	5199
39	Edge clip	5128
40	Casing clip	5588
41	Locating stud	5589
42	Self threading screw 3.9mm x 9.5	5193

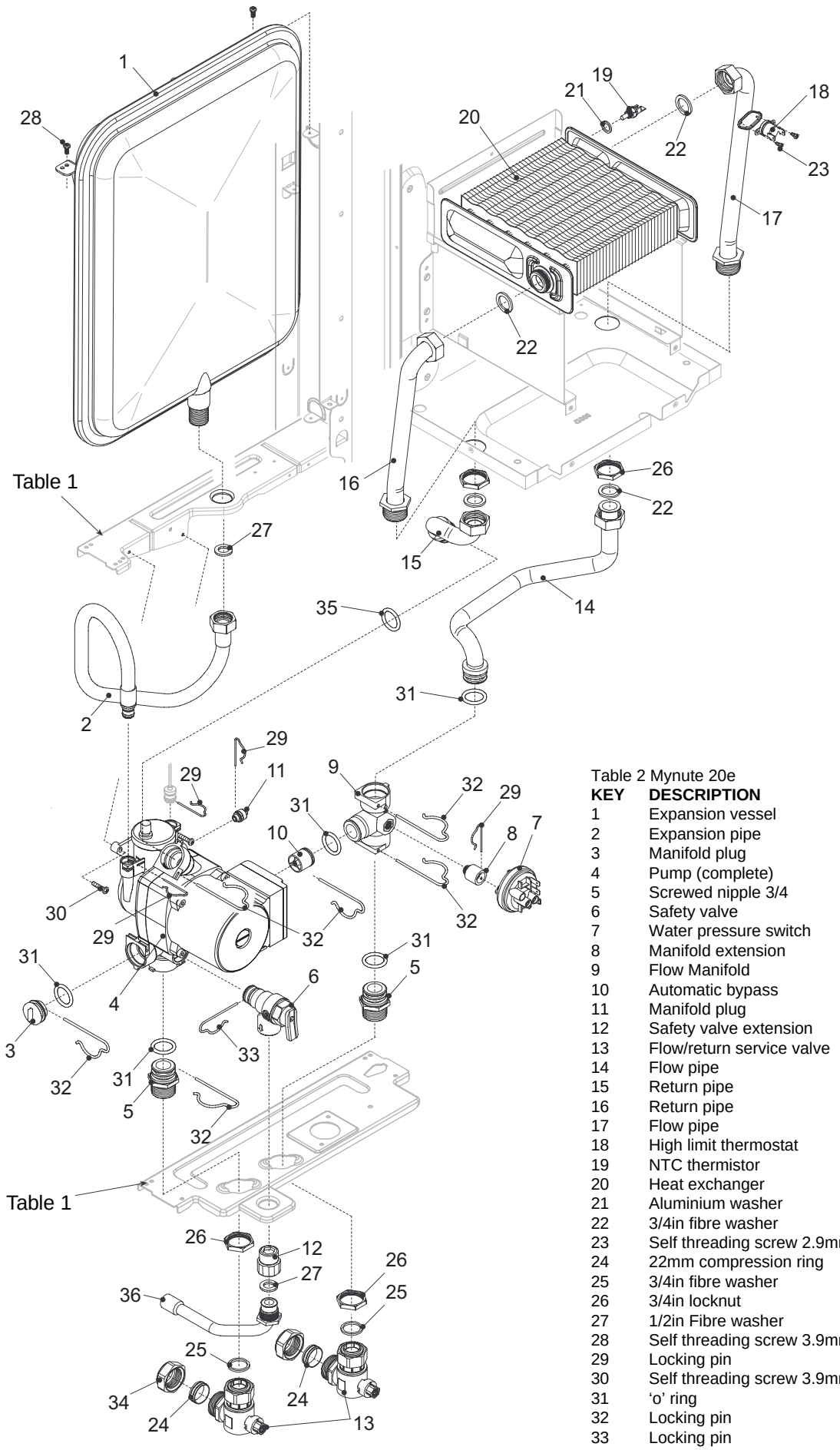

Table 2 Mynute 20e

KEY	DESCRIPTION	Part no 20e
1	Expansion vessel	10020839
2	Expansion pipe	2164
3	Manifold plug	2261
4	Pump (complete)	2225
5	Screwed nipple 3/4	2217
6	Safety valve	1806
7	Water pressure switch	2044
8	Manifold extension	10021251
9	Flow Manifold	10020621
10	Automatic bypass	2047
11	Manifold plug	2216
12	Safety valve extension	2260
13	Flow/return service valve	1789
14	Flow pipe	10021259
15	Return pipe	10021258
16	Return pipe	10021289
17	Flow pipe	10021290
18	High limit thermostat	8367
19	NTC thermistor	8484
20	Heat exchanger	10021232
21	Aluminium washer	5041
22	3/4in fibre washer	5023
23	Self threading screw 2.9mm x 6.5mm	5077
24	22mm compression ring	1822
25	3/4in fibre washer	5070
26	3/4in locknut	4026
27	1/2in Fibre washer	5026
28	Self threading screw 3.9mm x 9.5mm	5079
29	Locking pin	2165
30	Self threading screw 3.9mm x 19mm	5081
31	‘o’ ring	6898
32	Locking pin	2223
33	Locking pin	2222
34	Nut	1824
35	O-ring	7999
36	Pre-formed pipe	10021906

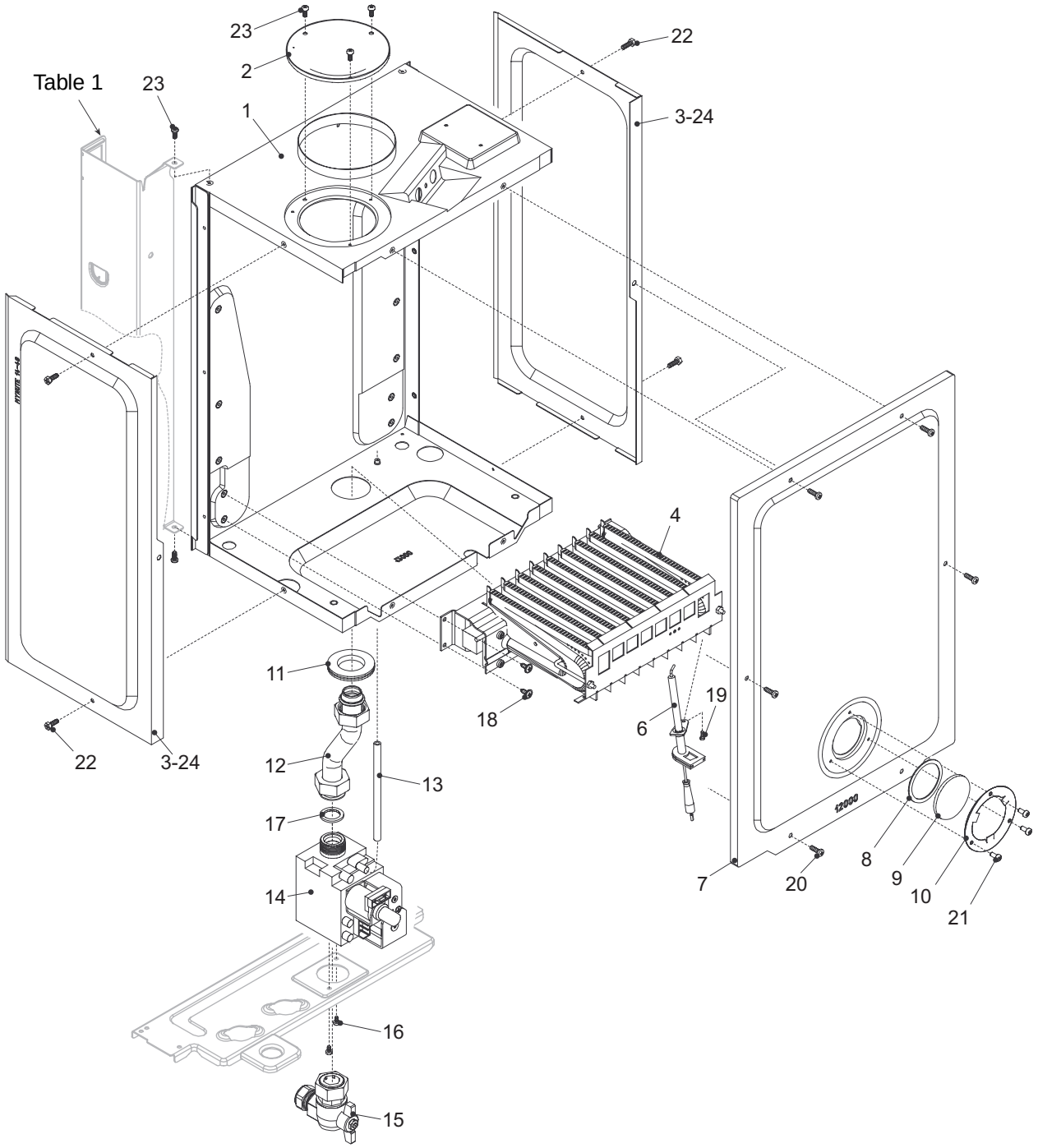

Table 3 Mynute 20e

KEY	DESCRIPTION	Part no 20e
1	Air chamber	10021288
2	Blanking disc	8084
3	Air chamber side panel	7824
4	Burner Nat. Gas	7808
	Burner LPG	7809
6	Spark electrode	10021255
7	Air chamber front panel	7822
8	Sight glass gasket	5072
9	Sight glass	3139
10	Sight glass retaining ring	4007
11	Gasket	5927
12	Gas valve outlet pipe	10021254

KEY	DESCRIPTION	Part no 20e
13	Compensator tube	1457
14	Gas valve	10021253
15	Gas cock	10020897
16	Gas valve securing screws	5105
17	3/4in fibre washer	5023
18	Self threading screw 3.9mm x 9.5mm	5212
19	Self threading screw 2.9mm x 9.5mm	5169
20	Self threading screw 3.9mm x 13mm	5080
21	Rivet 2.9mm x 7mm	5222
22	Self threading screw 3.9mm x 9.5mm	5180
23	Self threading screw 3.9mm x 9.5mm	5079
24	Air chamber seal	5905

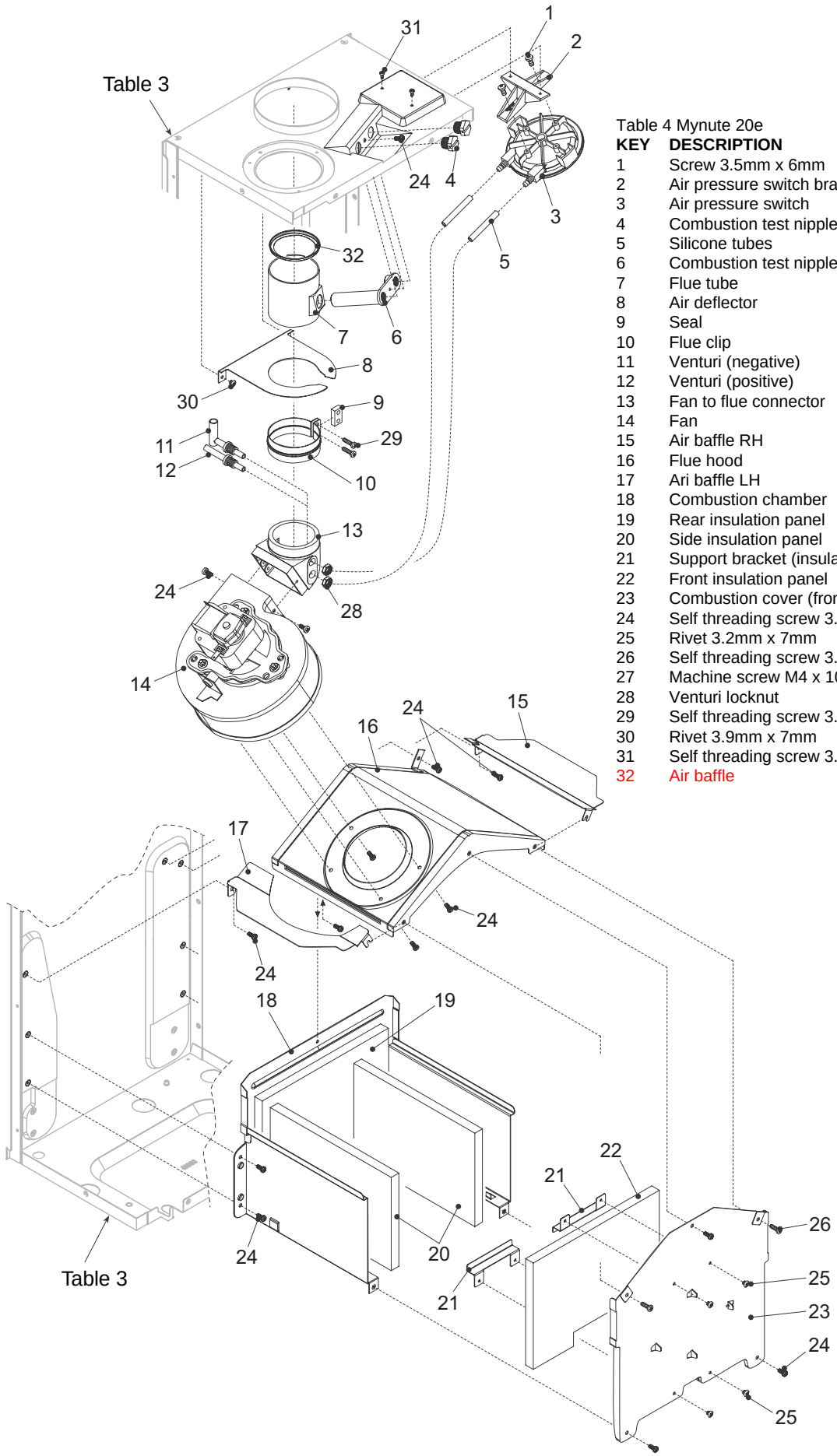

Table 4 Mynute 20e

KEY	DESCRIPTION	Part no 20e
1	Screw 3.5mm x 6mm	5145
2	Air pressure switch bracket	9233
3	Air pressure switch	9232
4	Combustion test nipple screw	8086
5	Silicone tubes	1457
6	Combustion test nipple	8085
7	Flue tube	2939
8	Air deflector	2928
9	Seal	5917
10	Flue clip	5916
11	Venturi (negative)	7948
12	Venturi (positive)	6985
13	Fan to flue connector	7816
14	Fan	5910
15	Air baffle RH	7814
16	Flue hood	2936
17	Ari baffle LH	7815
18	Combustion chamber	9264
19	Rear insulation panel	7818
20	Side insulation panel	5271
21	Support bracket (insulation panel)	5279
22	Front insulation panel	7817
23	Combustion cover (front)	7813
24	Self threading screw 3.9mm x 13mm	5079
25	Rivet 3.2mm x 7mm	5093
26	Self threading screw 3.9mm x 13mm	5080
27	Machine screw M4 x 10mm	5176
28	Venturi locknut	4807
29	Self threading screw 3.9mm x 19mm	5081
30	Rivet 3.9mm x 7mm	5094
31	Self threading screw 3.9mm x 6.5mm	5077
32	Air baffle	10021730

SECTION 10: LPG INSTRUCTIONS

For details of converting boilers to LPG please refer to the instructions supplied with the relevant conversion kit.

10.1 TECHNICAL DATA

	10e	14e	20e
Inlet pressure (LPG)	37 mbar	37 mbar	37 mbar
Maximum burner pressure	36 mbar	36 mbar	36 mbar
Gas rate	0.89 m^3/h	1.20 m^3/h	1.69 m^3/h
Injector size	5 x 0.77mm	7 x 0.77mm	9 x 0.80mm

10.2 RELATED DOCUMENTS

BS 6798		1987	INSTALLATION OF BOILERS OF RATED INPUT NOT EXCEEDING 60 kW
BS 5449	PART 1	1990	FORCED CIRCULATION HOT WATER SYSTEMS
BS 5546		1990	INSTALLATION OF GAS HOT WATER SUPPLIES FOR DOMESTIC PURPOSES
BS 5440	PART 1	1990	FLUES
BS 5482	PART 1	1994	DOMESTIC BUTANE & PROPANE GAS BURNERS IN PERMAMENT DWELLINGS

10.3 GAS SUPPLY

The gas supply must be connected to the appliance by a competent LPG installer and must be of sufficient size to supply the appliance at its maximum output.

An existing supply must be checked to ensure that it is of adequate size to deal with the maximum rated input of this and any other appliances that it serves.

10.4 GAS SUPPLY INSTALLATION

The entire installation including the meter must be purged and checked for gas soundness.

10.5 BURNER PRESSURE

Although the burner pressure is factory set, it is necessary to check it during commissioning, servicing, or if the boiler has been converted. Isolate the appliance from the electrical supply and attach a suitable manometer to the gas valve outlet test nipple.

Light the boiler as described in 5.6 and compare the reading on the manometer with the value described in 10.1 or fig. 25. If adjustment is required remove the compensator tube from the gas valve regulator.

Locate and remove the protective screwed cap that covers the burner pressure adjusting screw. Adjust the screw clockwise to increase the pressure or anti-clockwise to reduce.

Once the pressure has been adjusted, isolate the appliance from the electrical supply, replace the protective screwed cap, refit the compensator tube, remove the manometer, and tighten the outlet test nipple.

IMPORTANT, A GAS SOUNDNESS CHECK MUST BE CARRIED OUT.

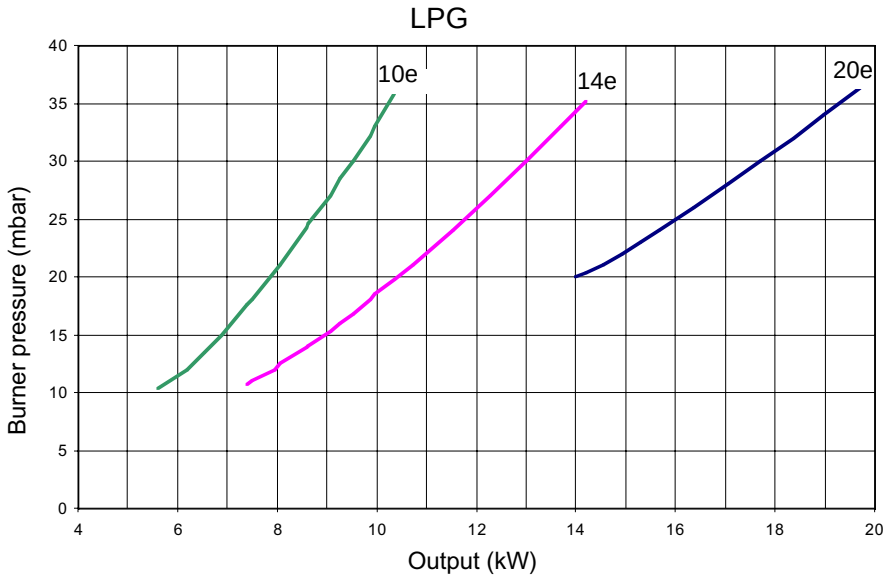

Fig. 25

Cod. 10022254 - 19/01 - Ed. 1

Vokèra

energizing home heating

Vokèra Ltd.
4th Floor, Catherine House, Boundary Way, Hemel Hempstead, Herts, HP2 7RP

Email: enquiries@vokera.co.uk Web: www.vokera.co.uk
General Enquiries - Tel: 01442 281400 Fax: 01442 281460
Technical Advice - Tel: 0141 945 6810
Spare Parts - Tel: 0141 945 68"0
After Sales Service - Tel: 0870 333 0220

Vokèra Ireland
West Court, Callan, Co Kilkenny
Tel: 056 55057 Fax: 056 55060

Vokèra Ltd. reserve the right to change the specifications without prior notice. Consumers' statutory rights are not affected.

A Riello Group Company

benchmark™ COLLECTIVE MARK

"Vokèra"
supports Benchmark