Vokèra

Mynute

28e - 35e

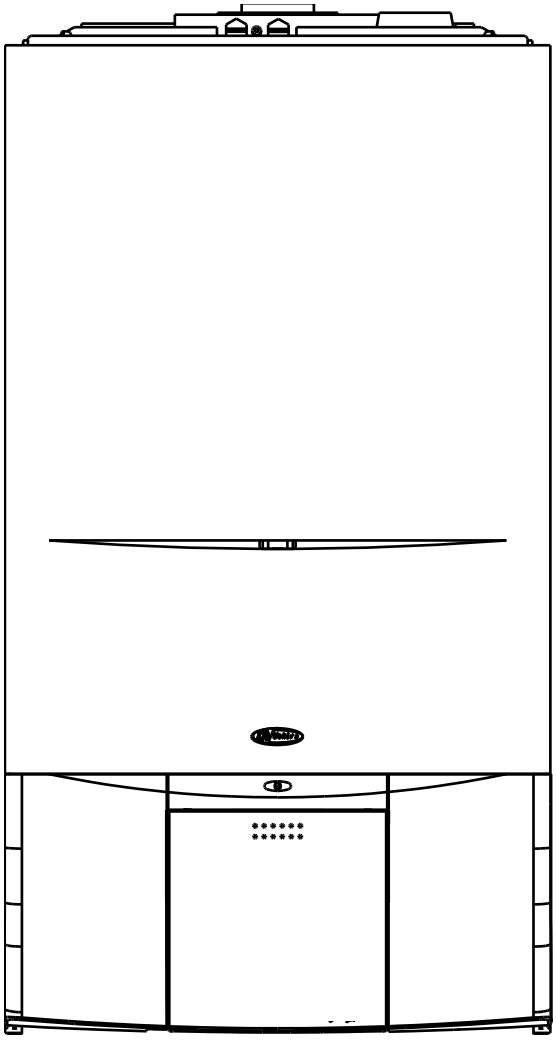

Installation & Servicing Instructions

CE

THESE INSTRUCTIONS TO BE RETAINED BY USER

spares & parts online
IBASIS.co.uk©

Contents

Design principles & operating sequence		Page
1.1	Principle components	2
1.2	Mode of operation	2
1.3	Safety devices	2

Technical data		Page
2.1	Performance	3
2.2	Gas pressure	3
2.3	Expansion vessel	3
2.4	Dimensions	3
2.5	Clearances	3
2.6	Connections	3
2.7	Electrical	3
2.8	Flue details	3
2.9	Efficiency	3
2.10	Pump duty	3

General requirements (UK)		Page
3.1	Related documents	4
3.2	Location of appliance	4
3.3	Gas supply	5
3.4	Flue system	5
3.5	Air supply	5
3.6	Water circulation	5
3.7	Electrical supply	6
3.8	Mounting on a combustible surface	6
3.9	Timber framed buildings	6
3.10	Condensate disposal	6
3.11	Inhibitors	6

General requirements (EIRE)		Page
3A.1	Related documents	6
3A.2	Location of appliance	6
3A.3	Gas supply	7
3A.4	Flue system	7
3A.5	Air supply	7
3A.6	Water circulation	7
3A.7	Electrical supply	8
3A.8	Mounting on a combustible surface	8
3A.9	Timber framed buildings	8
3A.10	Condensate disposal	8
3A.11	Inhibitors	8
3A.12	Declaration of conformity	8

Installation		Page
4.1	Delivery	8
4.2	Contents	8
4.3	Unpacking	8
4.4	Preparation for mounting the appliance	8
4.5	Fitting the flue	9
4.6	Connecting the gas & water	13
4.7	Electrical connections	13

Commissioning		Page
5.1	Gas supply installation	14
5.2	The heating system	14
5.3	Initial filling of the system	14
5.4	Initial flushing	14
5.5	Pre-operation checks	14
5.6	Initial lighting	14
5.7	Checking the burner pressure	15
5.8	Final flushing of the heating system	15
5.9	Setting the boiler operating temperature	15
5.10	Setting the system design pressure	15
5.11	Regulating the central heating system	15
5.12	Final checks	15
5.13	Instructing the user	15

Servicing		Page
6.1	General	16
6.2	Routine annual servicing	16
6.3	Replacement of components	16
6.4	Component removal procedure	16
6.5	Pump head	16
6.6	Safety valve	16
6.7	Automatic air release valve	17
6.8	Water pressure switch	17
6.9	Pressure gauge	17
6.10	NTC thermistors	17
6.11	High limit thermostat	17
6.12	Printed circuit board (PCB)	17
6.13	Gas valve	17
6.14	Integral time switch	17
6.15	Burner, injectors and spark/sense electrode	17
6.16	Flue fan	18
6.17	Heat exchanger	18
6.18	Air pressure switch	18
6.19	Expansion vessel	18

Checks, adjustments, and fault finding		Page
7.1	Checking appliance operation	20
7.2	Appliance mode of operation	20
7.3	Checking/adjusting burner pressure	20
7.4	Combustion analysis test	20
7.5	Checking the expansion vessel	21
7.6	External faults	21
7.7	Electrical checks	21
7.8	Fault finding	22
7.9	Fault codes	22

Wiring diagrams		Page
8.1	External wiring	27
8.2	Installation of Vokera twin channel programmer	27
8.3	Installation of Vokera time clock	27

Exploded diagrams		Page
9.1	Table 1	34
9.2	Table 2	35
9.3	Table 3	36
9.4	Table 4	37
9.5	Table 5	38

L.P.G. instructions		Page
10.1	Technical data	39
10.2	Related documents	39
10.3	Gas supply	39
10.4	Gas supply installation	39
10.5	Checking/Adjusting the burner pressure	39

The Vokera Mynute is a central heating boiler, which - by design - incorporates electronic ignition, circulating pump, expansion vessel, safety valve, pressure gauge and automatic by-pass.

It is produced as a room sealed, category II2H3+ appliance, suitable for wall mounted-internal-applications only. It is provided with a fan powered flue outlet with an annular co-axial combustion air intake that can be rotated – horizontally – through 360 degrees for various horizontal or vertical applications.

The Mynute can also be used with the Vokera twin flue system.

This appliance is designed for use with a sealed system only; consequently it is not intended for use on open vented systems.

The provision of stored hot water is possible by the addition of an indirect cylinder.

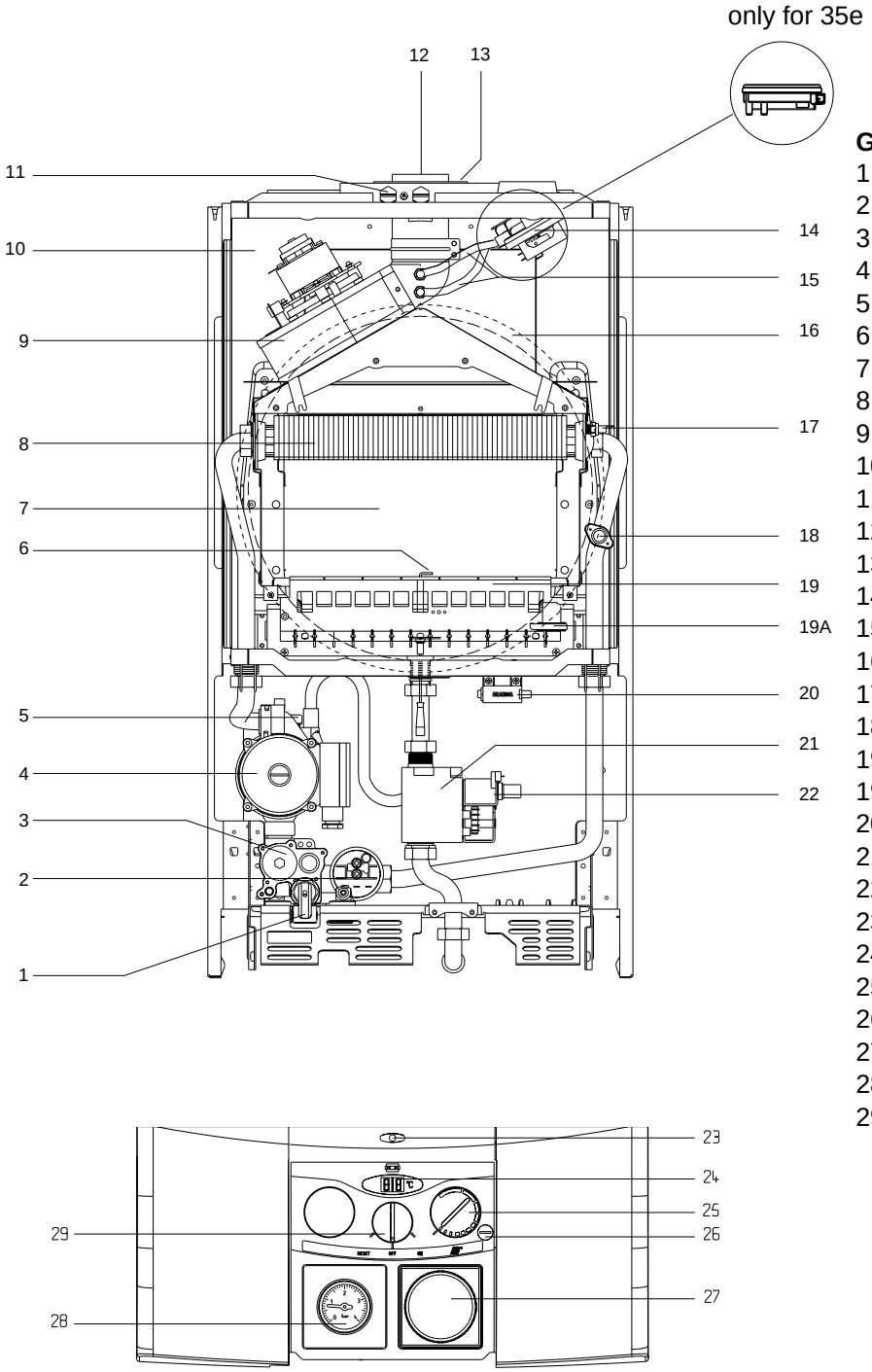

Fig. 1

General layout

1 Safety valve
2 Pressure switch
3 Hydraulic manifold
4 Pump
5 Automatic air release valve
6 Electrode
7 Combustion chamber
8 Main heat exchanger
9 Fan assembly
10 Air chamber (with front removed)
11 Flue gas analysis test point
12 Flue outlet
13 Air intake
14 Pressure differential switch
15 Silicone pressure tubes
16 Expansion vessel
17 Flow NTC
18 High limit thermostat
19 Main burner
19A Burner thermostat (only for 35e)
20 Transformer
21 Gas valve
22 Modulator coil
23 Status LED
24 Led display
25 Heating temperature control
26 Combustion switch
27 Timeclock aperture (optional)
28 Pressure gauge
29 Mode selector switch

1.1 PRINCIPLE COMPONENTS

- A fully integrated electronic control board featuring electronic temperature control, anti-cycle control, pump over-run, self-diagnostic fault indicator, continuous gas modulation.
- Low-water-content, copper heat exchanger.
- Electronic ignition with flame supervision.
- Integral high-head pump.
- Fan.
- Expansion vessel.
- Differential air pressure switch.
- Water pressure switch.
- Two-stage gas valve.
- Pressure gauge.
- Safety valve.

1.2 MODE OF OPERATION

When there is a request for heat and/or hot water via the programmer/time clock and/or any external control, the pump and fan are started, the fan proves the differential air pressure switch which in-turn allows an ignition sequence to begin.

Ignition is sensed by the electronic circuitry to ensure flame stability at the burner.

Once successful ignition has been achieved, the electronic circuitry increases the gas rate to 75% for a period of 15 minutes. Thereafter, the boiler's output will either be increase to maximum or modulate to suit the set requirement.

When the appliance reaches the desired temperature the burner will shut down and the boiler will perform a three-minute anticycle (timer delay). When the request for heat and/or hot water has been satisfied the appliance pump and fan may continue to operate to dissipate any residual heat within the appliance.

1.3 SAFETY DEVICES

When the appliance is in use, safe operation is ensured by:

- a water pressure switch that monitors system water pressure and will deactivate the pump, fan, and burner should the system water pressure drop below the rated tolerance;
- a high limit thermostat that over-rides the temperature control circuit to prevent or interrupt the operation of the burner;
- a differential air pressure switch that checks the operation of the fan and flue thereby allowing safe operation of the burner;
- a safety valve which releases excess pressure from the primary circuit;
- burner temperature control.

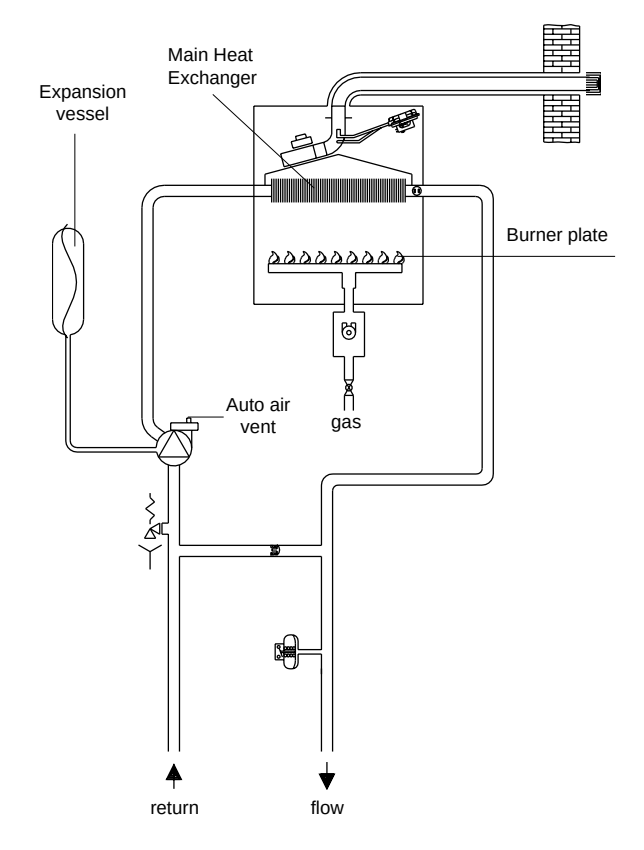

Fig. 2

SECTION 2 TECHNICAL DATA

	28 e	35e
2.1 Performance		
Heat input	31 kW	37,8 kW
Heat output (max)	28 kW	35,2 kW
Heat output (min)	10,50 kW	9,22 kW
Minimum working pressure	0,5 bar	
Maximum working pressure	3 bar	
Minimum flow rate	350 l/h	
2.2 Gas pressure		
Inlet pressure (G20)	20,0 mbar	
Maximum burner pressure	10,1 mbar	9,6 mbar
Minimum burner pressure	1,6 mbar	0,7 mbar
Gas rate	3,27 m^3/h	4,00 m^3/h
Injector size	14 x 1,35mm	16 x 1,4mm
2.3 Expansion vessel		
Capacity	10 litres	
Maximum system volume	91 litres	
Pre-charge pressure	1,0 bar	
2.4 Dimensions		
Height	820 mm	
Width	450 mm	500 mm
Depth	355 mm	
Dry weight	40 kg	47 kg
2.5 Clearances		
Sides	12 mm	
Top	150 mm from casing or 25 mm above flue elbow (whichever is applicable)	
Bottom	150 mm	
Front	600 mm	
2.6 Connections		
Flow & return	22 mm (compression)	
Gas	15 mm (compression)	
Safety valve	15 mm copper	
2.7 Electrical		
Voltage	230V/~ 50hz	
Power consumption	130 W	160 W
Internal fuse	2 AL	
External fuse	3 A	
2.8 Flue details		
Maximum horizontal flue length (concentric)	3,4 metres	2 metres
Maximum vertical flue length (concentric)	4,4 metres	2,8 metres
Maximum twin flue length (horizontal or vertical)	14m/14m + terminal	7m+7m
2.9 Efficiency		
SEBDUK rating	78,0%	80,3%

Ref. Condition 15 °C , 1013,25 mbar, dry gas NOTE: L.P.G. data refer to section 10

2.10 PUMP DUTY

Fig. 3 shows the flow-rate available – after allowing for pressure loss through the appliance – against system pressure loss. When using this graph apply only the pressure loss of the system. The graph is based on 20°C temperature differential.

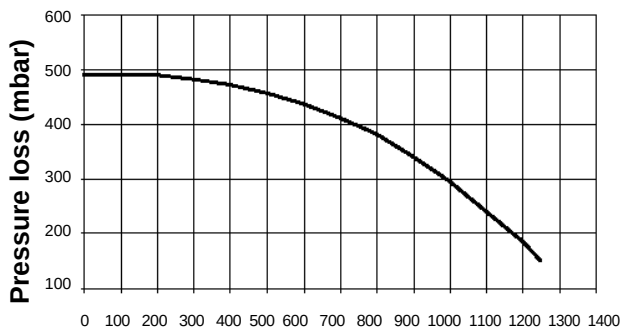

Fig. 3

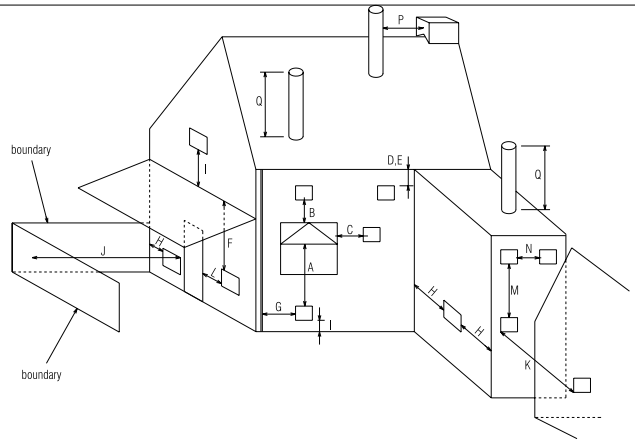

Fig. 4

Key	Location	Minimum distance
A	Below an opening (window, air-brik, etc.)	300 mm
B	Above an opening (window, air-brik, etc.)	300 mm
C	To the side of an opening (window, air-brik, etc.)	300 mm
D	Below gutter, drain-pipe, etc.	75 mm
E	Below eaves	200 mm
F	Below balcony, car-port roof, etc.	200 mm
G	To the side of a soil/drain-pipe, etc.	150 mm
H	From internal/external corner or boundary	300 mm
I	Above ground, roof, or balcony level	300 mm
J	From a surface or boundary facing the terminal	600 mm
K	From a terminal facing a terminal	1200 mm
L	From an opening in the car-port into the building	1200 mm
M	Vertically from a terminal on the same wall	1500 mm
N	Horizontally from a terminal on the same wall	300 mm
P	From a structure to the side of the vertical terminal	300 mm
Q	From the top of the vertical terminal to the roof flashing	As determined by the fixed collar of the vertical terminal

SECTION 3 GENERAL REQUIREMENTS (UK)

This appliance must be installed by a competent person in accordance with the Gas Safety (Installation & Use) Regulations.

3.1 RELATED DOCUMENTS

The installation of this boiler must be in accordance with the relevant requirements of the Gas Safety (Installation & Use) Regulations, the local building regulations, the current I.E.E. wiring regulations, the bylaws of the local water undertaking, the Building Standards (Scotland) Regulation and Building Standards (Northern Ireland) Regulations.

It should be in accordance also with any relevant requirements of the local authority and the relevant recommendations of the following British Standard Codes of Practice.

3.2 LOCATION OF APPLIANCE

The appliance may be installed in any room or internal space, although particular attention is drawn to the requirements of the current I.E.E. wiring regulations, and in Scotland, the electrical provisions of the Building Regulations, with respect to the installation of the appliance in a room or internal space containing a bath or shower.

When an appliance is installed in a room or internal space containing a bath or shower, the appliance or any control pertaining to it must not be within reach of a person using the bath or shower.

The location chosen for the appliance must permit the provision of a safe and satisfactory flue and termination. The location must also permit an adequate air supply for combustion purposes and an adequate space for servicing and air circulation around the appliance.

Where the installation of the appliance will be in an unusual location special procedures may be necessary, BS 6798 gives detailed guidance on this aspect.

BS 5440	**PART 1**	**FLUES**
BS 5440	**PART 2**	**FLUES & VENTILATION**
BS 5449	**PART 1**	**FORCED CIRCULATION HOT WATER SYSTEMS**
BS 6798		**INSTALLATION OF BOILERS OF RATED INPUT NOT EXCEEDING 60kW**
BS 6891		**LOW PRESSURE INSTALLATION PIPES**
BS 7074	**PART 1**	**APPLICATION, SELECTION AND INSTALLATION OF EXPANSION VESSELS AND ANCILLARY EQUIPMENT FOR SEALED WATER SYSTEMS**

A compartment used to enclose the appliance must be designed and constructed specifically for this purpose. An existing compartment/cupboard may be utilised provided that it is modified to suit.

Details of essential features of compartment/ cupboard design, including airing cupboard installations, are given in BS 6798. This appliance is not suitable for external installation.

3.3 GAS SUPPLY

The gas meter – as supplied by the gas supplier – must be checked to ensure that it is of adequate size to deal with the maximum rated input of all the appliances that it serves. Installation pipes must be fitted in accordance with BS 6891. Pipe work from the meter to the appliance must be of adequate size. Pipes of a smaller size than the appliance gas inlet connection must not be used. The installation must be tested for soundness in accordance with BS 6891.

If the gas supply serves more than one appliance, it must be ensured that an adequate supply is maintained to each appliance when they are in use at the same time.

3.4 FLUE SYSTEM

The terminal should be located where the dispersal of combustion products is not impeded and with due regard for the damage and discoloration that may occur to building products located nearby. The terminal must not be located in a place where it is likely to cause a nuisance (fig. 4).

In a cold and/or humid water, water vapour may condense on leaving the terminal; the effect of such pluming must be considered.

If installed less than 2 metres above a pavement or platform to which people have access (including balconies or flat roofs) the terminal must be protected by a guard of durable material. The guard must be fitted centrally over the terminal. Refer to BS 5440 Part 1, when the terminal is 0,5 metres (or less) below plastic guttering or 1 metre (or less) below painted eaves.

3.5 AIR SUPPLY

The following notes are intended for general guidance only.

This appliance is a room sealed, fan-flued boiler, consequently it does not require a permanent air vent for combustion air supply.

When installed in a cupboard or compartment, ventilation for cooling purposes is also not required.

3.6 WATER CIRCULATION

Detailed recommendations are given in BS 5449 Part 1 and BS 6798. The following notes are for general guidance only.

3.6.1 PIPEWORK

It is recommended that copper tubing to BS 2871 Part 1 is used in conjunction with soldered capillary joints.

Where possible pipes should have a gradient to ensure air is carried naturally to air release points and that water flows naturally to drain cocks.

Except where providing useful heat, pipes should be insulated to avoid heat loss and in particular to avoid the possibility of freezing. Particular attention should be paid to pipes passing through ventilated areas such as under floors, loft-space and void areas.

3.6.2 AUTOMATIC BY-PASS

The appliance has a built-in automatic by-pass, consequently there is no requirement for an external by-pass, however the design of the system should be such that it prevents boiler 'cycling'.

3.6.3 DRAIN COCKS

These must be located in accessible positions to facilitate draining of the appliance and all water pipes connected to the appliance. The drain cocks must be manufactured in accordance with BS 2879.

3.6.4 AIR RELEASE POINTS

These must be positioned at the highest points in the system where air is likely to be trapped. They should be used to expel trapped air and allow complete filling of the system.

3.6.5 EXPANSION VESSEL

The appliance has an integral expansion vessel to accommodate the increased volume of water when the system is heated. It can accept up to 10 litres of expansion from within the system, generally this is sufficient, however if the system has an unusually high water content, it may be necessary to provide additional expansion capacity.

3.6.6 FILLING POINT (fig. 5)

A method for initial filling of the system and replacing water lost during servicing etc. has been provided. This method of filling must comply with the current Water Supply (Water Fittings) Regulations 1999 and Water Bylaws 2000 (Scotland). Fig. 5 shows a widely accepted method.

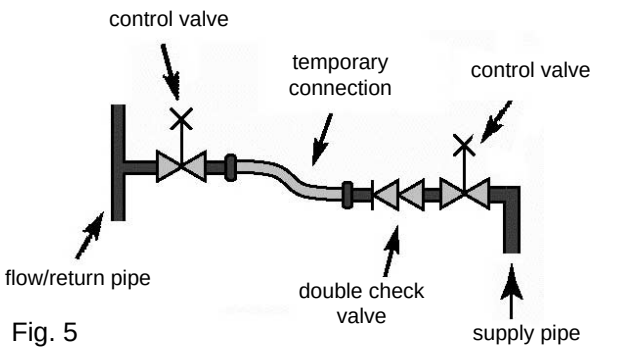

Fig. 5

3.6.7 LOW PRESSURE SEALED SYSTEM

An alternative method of filling the system would be from an independent make-up vessel or tank mounted in a position at least 1 metre above the highest point in the system and at least 5 metres above the boiler (fig. 5A). The cold feed from the make-up vessel or tank must be fitted with an approved non-return valve and stopcock for isolation purposes. The feed pipe should be connected to the return pipe as close to the boiler as possible.

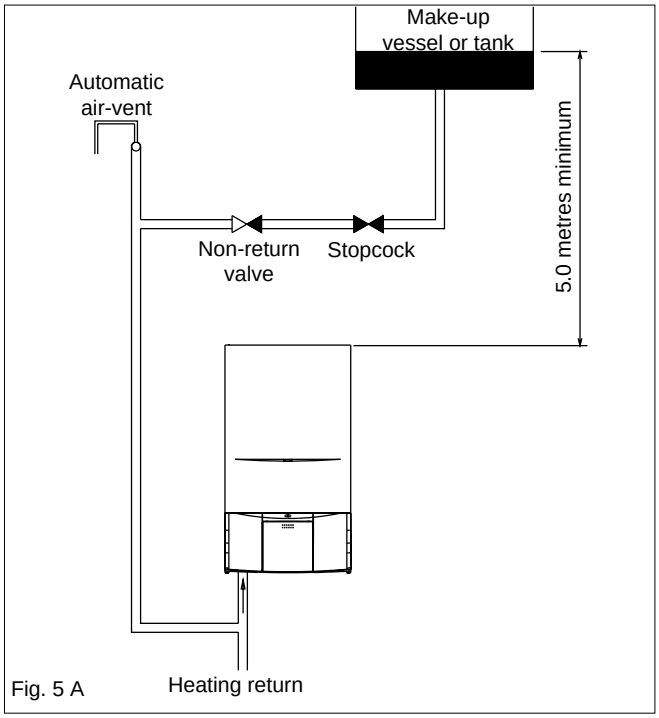

Fig. 5 A

3.6.8 FREQUENT FILLING

Frequent filling or venting of the system may be indicative of a leak. Care should be taken during the installation of the appliance to ensure all aspects of the system are capable of withstanding pressures up to at least 3 bar.

3.7 ELECTRICAL SUPPLY

The appliance is supplied for operation on 230V @ 50Hz electrical supply; it must be protected with a 3-amp fuse. The method of connection to the mains electricity supply must allow for complete isolation from the supply. The preferred method is by using a double-pole switch with a contact separation of at least 3 mm. The switch must only supply the appliance and its corresponding controls, i.e. time clock, room thermostat, etc. Alternatively an un-switched shuttered socket with a fused 3-pin plug both complying with BS 1363 is acceptable.

3.8 MOUNTING ON A COMBUSTIBLE SURFACE

If the appliance is to be fitted on a wall of combustible material, a sheet of fireproof material must protect the wall.

3.9 TIMBER FRAMED BUILDINGS

If the appliance is to be fitted in a timber framed building, it should be fitted in accordance with the Institute of Gas Engineers publication (IGE/UP/7) “Guide for Gas Installations in aTimber Frame Buildings”.

3.10 CONDENSATE DISPOSAL

When choosing a location for the boiler, consideration should be given to the disposal of the condensate discharge into a suitable drain or soil pipe. The condensate outlet pipe must be connected to the drain in accordance with building regulations or other rules in force.

3.11 INHIBITORS

Vokera recommend that a inhibitor – suitable for use with aluminium heat exchangers – is used to protect the boiler and system from the effects of corrosion and/or electrolytic action. The inhibitor must be administered in strict accordance with the manufacturers* instructions.

*Fernox and Sentinel manufacture products that have proved suitable for use with Vokera appliances. Vokera Ltd. cannot comment on the suitability of any other such product with our appliances.

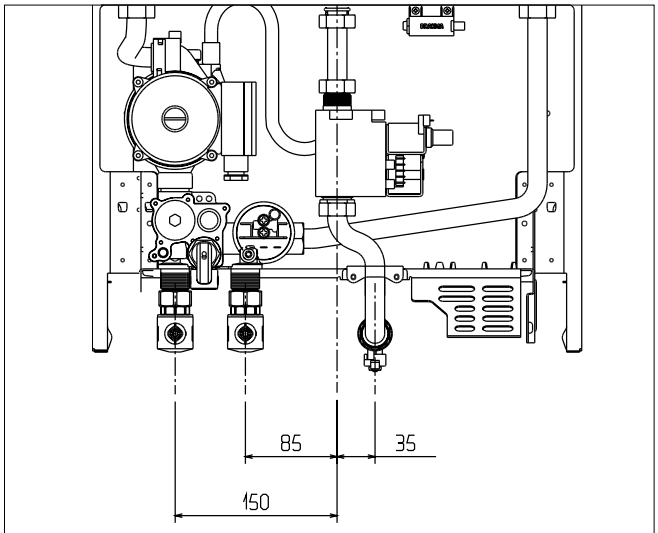

Fig. 6

SECTION 3A GENERAL REQUIREMENTS (EIRE)

This appliance must be installed by a competent person in accordance with and defined by, the Standard Specification (Domestic Gas Installations) Declaration (I.S. 813).

3A.1 RELATED DOCUMENTS

The installation of this boiler must be in accordance with the relevant requirements of the local building regulations, the current ETCI National Rules for Electrical Installations, and the bylaws of the local water undertaking.

It should be in accordance also with any relevant requirements of the local and/or district authority.

3A.2 LOCATION OF APPLIANCE

The appliance may be installed in any room or internal space, although particular attention is drawn to the requirements of the current ETCI National Rules for Electrical Installations, and I.S. 813, Annex K.

When an appliance is installed in a room or internal space containing a bath or shower, the appliance or any control pertaining to it must not be within reach of a person using the bath or shower.

The location chosen for the appliance must permit

the provision of a safe and satisfactory flue and termination. The location must also permit an adequate air supply for combustion purposes and an adequate space for servicing and air circulation around the appliance. Where the installation of the appliance will be in an unusual location special procedures may be necessary, refer to I.S. 813 for detailed guidance on this aspect.

A compartment used to enclose the appliance must be designed and constructed specifically for this purpose. An existing compartment/ cupboard may be utilised provided that it is modified to suit.

This appliance is not suitable for external installation.

3A.3 GAS SUPPLY

The gas meter – as supplied by the gas supplier – must be checked to ensure that it is of adequate size to deal with the maximum rated input of all the appliances that it serves. Installation pipes must be fitted in accordance with I.S. 813.

Pipe work from the meter to the appliance must be of adequate size. Pipes of a smaller size than the appliance gas inlet connection must not be used. The installation must be tested for soundness in accordance with I.S. 813.

If the gas supply serves more than one appliance, it must be ensured that an adequate supply is maintained to each appliance when they are in use at the same time.

3A.4 FLUE SYSTEM

The terminal should be located where the dispersal of combustion products is not impeded and with due regard for the damage and discoloration that may occur to building products located nearby. The terminal must not be located in a place where it is likely to cause a nuisance (see I.S. 813).

In cold and/or humid weather, water vapour may condense on leaving the terminal; the effect of such pluming must be considered.

If installed less than 2m above a pavement or platform to which people have access (including balconies or flat roofs) the terminal must be protected by a guard of durable material. The guard must be fitted centrally over the terminal. Refer to I.S. 813, when the terminal is 0.5 metres (or less) below plastic guttering or 1 metre (or less) below painted eaves.

3A.5 AIR SUPPLY

The following notes are intended for general guidance only.

This appliance is a room-sealed, fan-flued boiler, consequently it does not require a permanent air vent for combustion air supply.

When installed in a cupboard or compartment, ventilation for cooling purposes is also not required.

3A.6 WATER CIRCULATION

Specific recommendations are given in I.S. 813.

The following notes are for general guidance only.

3A.6.1 PIPEWORK

It is recommended that copper tubing be used in conjunction with soldered capillary joints.

Where possible pipes should have a gradient to ensure air is carried naturally to air release points and that water flows naturally to drain cocks.

Except where providing useful heat, pipes should be insulated to avoid heat loss and in particular to avoid the possibility of freezing. Particular attention should be paid to pipes passing through ventilated areas such as under floors, loft space, and void areas.

3A.6.2 AUTOMATIC BY-PASS

The appliance has a built-in automatic by-pass, consequently there is no requirement for an external by-pass, however the design of the system should be such that it prevents boiler 'cycling.

3A.6.3 DRAIN COCKS

These must be located in accessible positions to facilitate draining of the appliance and all water pipes connected to the appliance.

3A.6.4 AIR RELEASE POINTS

These must be positioned at the highest points in the system where air is likely to be trapped. They should be used to expel trapped air and allow complete filling of the system.

3A.6.5 EXPANSION VESSEL

The appliance has an integral expansion vessel to accommodate the increased volume of water when the system is heated. It can accept up to 10 litres of expansion from within the system, generally this is sufficient, however if the system has an unusually high water content, it may be necessary to provide additional expansion capacity.

3A.6.6 FILLING POINT

A method for initial filling of the system and replacing water lost during servicing etc. must be provided. A typical arrangement is shown in figure 5. You should ensure this method of filling complies with the local water authority regulations.

3A.6.7 LOW PRESSURE SEALED SYSTEM

An alternative method of filling the system would be from an independent make-up vessel or tank mounted in a position at least 1 metre above the highest point in the system and at least 5 metres above the boiler (fig. 5).

The cold feed from the make-up vessel or tank must be fitted with an approved non-return valve and stopcock for isolation purposes. The feed pipe should be connected to the return pipe as close to the boiler as possible.

3A.6.8 FREQUENT FILLING

Frequent filling or venting of the system may be indicative of a leak. Care should be taken during

the installation of the appliance to ensure all aspects of the system are capable of withstanding pressures up to at least 3 bar.

3A.7 ELECTRICAL SUPPLY

The appliance is supplied for operation on 230V @ 50Hz electrical supply; it must be protected with a 3-amp fuse. The method of connection to the mains electricity supply must allow for complete isolation from the supply. The preferred method is by using a double-pole switch with a contact separation of at least 3 mm. The switch must only supply the appliance and its corresponding controls, i.e. time clock, room thermostat, etc.

3A.8 MOUNTING ON A COMBUSTIBLE SURFACE

If the appliance is to be fitted on a wall of combustible material, a sheet of fireproof material must protect the wall.

3A.9 TIMBER FRAMED BUILDINGS

If the appliance is to be fitted in a timber framed building, it should be fitted in accordance with I.S. 813 and local Building Regulations.

The Institute of Gas Engineers publication (IGE/UP/7) 'Guide for Gas Installations in Timber Frame Buildings' gives specific advice on this type of installation.

3A.10 CONDENSATE DISPOSAL

When choosing a location for the boiler, consideration should be given to the disposal of the condensate discharge into a suitable drain or soil pipe. The condensate outlet pipe must be connected to the drain in accordance with building regulations or other rules in force.

3A.11 INHIBITORS

Vokera recommend that a inhibitor – suitable for use with aluminium heat exchangers – is used to protect the boiler and system from the effects of corrosion and/or electrolytic action. The inhibitor must be administered in strict accordance with the manufacturers* instructions.

*Fernox and Sentinel manufacture products that have proved suitable for use with Vokera appliances. Vokera Ltd. cannot comment on the suitability of any other such product with our appliances.

3A.12 DECLARATION OF CONFORMITY

A Declaration of Conformity (as defined in I.S. 813) must be provided on completion of the installation.

A copy of the declaration must be given to the responsible person and also to the gas supplier if required.

SECTION 4 INSTALLATION

4.1 DELIVERY

The appliance is delivered in a heavy-duty cardboard carton. Lay the carton on the floor with the writing the correct way up.

4.2 CONTENTS

Contained within the carton is:

- the boiler;
- the wall mounting bracket;
- template;
- an accessories pack containing the appliance service valves and washers;
- the instruction pack containing the installation & servicing instructions, user instructions, Benchmark logbook, guarantee registration card, and a 3amp fuse.

4.3 UNPACKING

At the top of the carton pull both sides open – do not use a knife – unfold the rest of the carton from around the appliance, carefully remove all protective packaging from the appliance, and lay the accessories etc. to one side.

4.4 PREPARATION FOR MOUNTING THE APPLIANCE

The appliance should be mounted on a smooth, vertical, surface, which must be capable of supporting the full weight of the appliance. Care should be exercised when determining the position of the appliance with respect to hidden obstructions such as pipes, cables, etc.

When the position of the appliance has been decided – using the template supplied – carefully mark the position of the wall-mounting bracket (see fig. 7) and flue-hole (if applicable).

4.4.1 IMPORTANT

There are two holes on the template.
The lower hole should be used with the telescopic flue kit (part n° 0225705 & 0225710). The upper hole is for use with all other horizontal flue kits.

4.4.2 MAXIMUM FLUE LENGTHS

Flue system	**28e**	**35e**
Concentric Horizontal	3,4m	2 m
Concentric Vertical	4,4m	2,8 m
Twin flue	14m/14m + terminal	7m+7m

4.5 FITTING THE FLUE

The top flue outlet permits both horizontal and vertical flue applications to be considered, alternatively, the Vokera twin flue system can be utilised if longer flue runs are required.

4.5.1 CONCENTRIC HORIZONTAL FLUE

(For concentric vertical flue, see 4.5.2).
(For twin flue applications, see 4.5.3).
The appliance flue outlet elbow can be rotated through 360° on its vertical axis. In addition the flue may be extended from the outlet elbow in the horizontal plane (see 4.4.2), however if the flue is to be extended or additional bends are to be fitted, the standard horizontal flue kit (part n° 2359029) **must** be used. A reduction must also be made to the maximum length (see table) when additional bends are used.

Reduction for additional bends

Bend	
45° bend	0,5 metre
90° bend	1,0 metre

Horizontal flue terminals and accessories

Part No.	Description	Min-Max length
0225705	Standard telescopic flue	380mm-600mm (dimension X)
0225710	Extended telescopic flue	600mm-920mm (dimension X)
2359029	Horizontal flue kit for use with add. bends & extensions	833mm (dimension X)
2359069	750mm extension	750mm
2359079	1500mm extension	1500mm
2359049	45° bend (pair)	N/A
2359059	90° bend	N/A
0225760	Wall bracket (5)	N/A

Using the template provided, mark and drill a 115mm hole for the passage of the flue pipe. The hole should have a 1° drop from the boiler to outside, to eliminate the possibility of rainwater entering the appliance via the flue.

The fixing holes for the wall-mounting bracket should now be drilled and plugged, an appropriate type and quantity of fixing should be used to ensure that the bracket is mounted securely. Once the bracket has been secured to the wall, mount the appliance onto the bracket.

IMPORTANT

The flue restrictor ring must be inserted into the appliance flue outlet if the total flue length is less than 1.0m

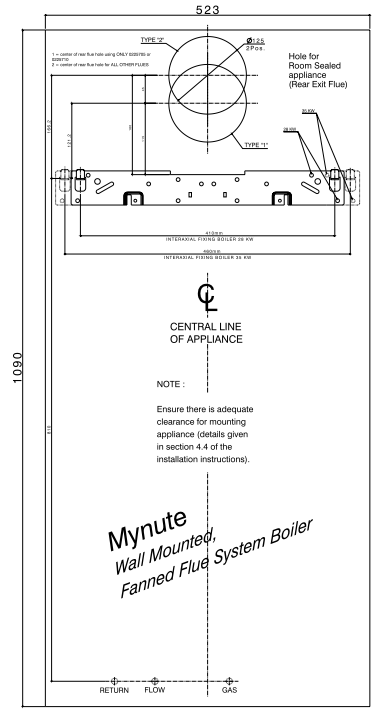

Fig. 7

FITTING THE TELESCOPIC FLUE KIT (0225705 & 0225710)

Carefully measure the distance from the centre of the appliance flue outlet to the face of the outside wall (dimension X see fig. 8). Add 50mm to dimension X to give the overall flue length (dimension Y). Using the complete telescopic flue assembly adjust the length to suit dimension Y. Once the telescopic flue terminal has been adjusted to the correct length, secure the flue assembly with the screw supplied.

Insert the flue assembly into the previously drilled flue hole and locate the flue bend over the appliance flue outlet. Push the flue bend down over the appliance flue outlet and ensure the correct seal is made. Pull the flue assembly towards and over the flue bend - using a twisting action - ensuring the correct seal is made. Check that the terminal protrudes past the finished outside wall by the correct length (115mm).

NOTE

You must ensure that the entire flue system is properly supported and connected.

Seal the flue assembly to the wall using cement or a suitable alternative that will provide satisfactory weatherproofing. The interior and exterior trim can now be fitted.

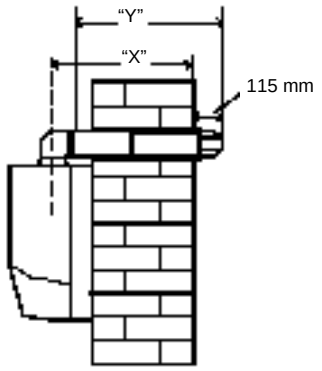

Fig. 8

"X" + 50 mm = "Y"

FITTING THE STANDARD (2359029) HORIZONTAL FLUE KIT (see 4.4.1)

Carefully measure the distance from the centre of the appliance flue outlet to the face of the outside wall (dimension X see fig. 8A). Ensure the inner (60mm) pipe is fully inserted into the outer (100mm) pipe (when the inner pipe is fully inserted, it stands proud of the outer pipe by 7,5mm). Add 32mm to dimension X to give the overall flue length (dimension Y). The standard horizontal flue kit (part no.2359029) is suitable for a distance (dimension Y) of up to 865mm.

NOTE

Dimension Y is measured from the end of the terminal to the end of the outer (100mm) pipe.

The internal trim should be fitted to the flue pipe before connection of the 90° bend.

If the horizontal flue kit (2359029) requires to be cut to the correct size (dimension Y), you must ensure that the inner (60mm) pipe stands proud of the outer (100mm) pipe by 7,5 mm (see fig. 8B). Ensure any burrs are filed or removed and any seals are located properly before assembly. Hold the inner (60mm) pipe of the terminal assembly and connect to the push-fit end of the 90° bend (supplied) using a twisting action. Insert the assembled flue into the previously drilled hole. Using the clips & screws supplied, connect the flue assembly to the boiler, ensuring that the terminal protrudes past the finished outside wall by the correct length (135mm).

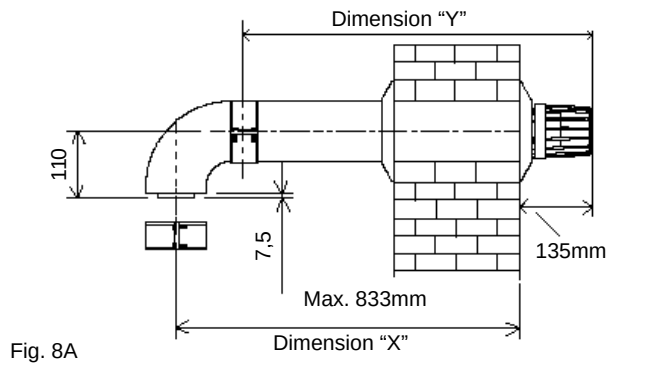

Fig. 8A

You must ensure that the entire flue system is properly supported and connected.

Seal the flue assembly to the wall using cement or a suitable alternative that provides satisfactory weatherproofing. The exterior trim can now be fitted.

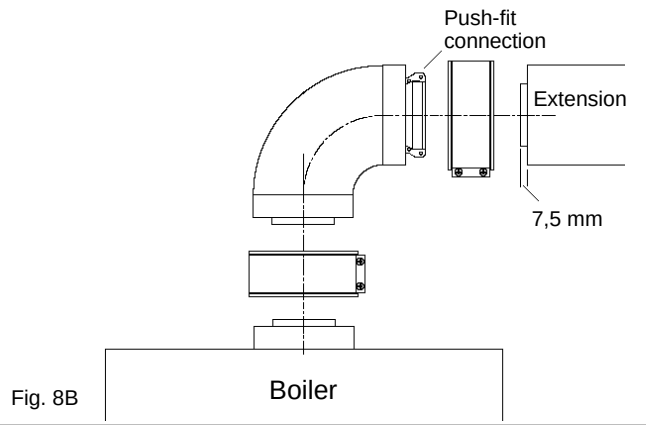

Fig. 8B

EXTENDING THE HORIZONTAL FLUE

If the horizontal flue requires extension/s or additional bend/s, the horizontal flue terminal kit (2359029) must be used. Connect the bend - supplied with the terminal kit - to the top of the boiler using the clips, screws, & gaskets supplied. The additionalbend & extensions have an internal push-fit connection, care should be taken to ensure that the correct seal is made when assembling the flue system. Connect the required number of flue extensions or bends (up to the maximum equivalent flue length) to the flue terminal using the clips, screws, & gaskets supplied (see fig. 8 & 8A).

IMPORTANT

The flue restrictor ring must be removed or discarded if the total flue length - including bends- exceeds 1.0m (28e only).

NOTE

When cutting the horizontal flue terminal or an extension to the required length, you must ensure that the excess is cut from the plain end of the terminal or extension, and that the inner (60mm) pipe is 7,5mm longer than outer (100mm) pipe (see fig. 8A & 8B). Remove any burrs, and check that any seals are located properly.

You must ensure that the entire flue system is properly supported and connected.

Seal the flue assembly to the wall using cement or a suitable alternative that will provide satisfactory weatherproofing. The interior and exterior trim can now be fitted.

4.5.2 CONCENTRIC VERTICAL FLUE

The vertical flue terminal can be connected directly to the appliance flue outlet.

Alternatively, an extension or bend can be connected to the appliance flue outlet if desired (see 4.4.2), however if additional bends are fitted, a reduction must be made to the maximum flue length (see table below).

Reduction for bends

Bend	Reduction in maximum flue length for each bend
45° bend	0,5 metre
90° bend	1,0 metre

Vertical flue terminal and accessories

Part No.	Description	Length
2359039	Vertical flue terminal	1000 mm
0225770	Pitched roof flashing plate	N/A
0225765	Flat roof flashing plate	N/A
2359069	750mm extension	750mm
2359079	1500mm extension	1500mm
2359049	45° bend (pair)	N/A
2359059	90° bend	N/A
0225760	Wall bracket (5)	N/A

Using the dimensions given in fig. 9 as a reference, mark and cut a 105mm hole in the ceiling and/or roof. Fit the appropriate flashing plate to the roof and insert the vertical flue terminal through the flashing plate from the outside, ensuring that the collar on the flue terminal fits over the flashing.

The fixing holes for the wall-mounting bracket should now be drilled and plugged, an appropriate type and quantity of fixing should be used to ensure that the bracket is mounted securely. Once the bracket has been secured to the wall, mount the appliance onto the bracket.

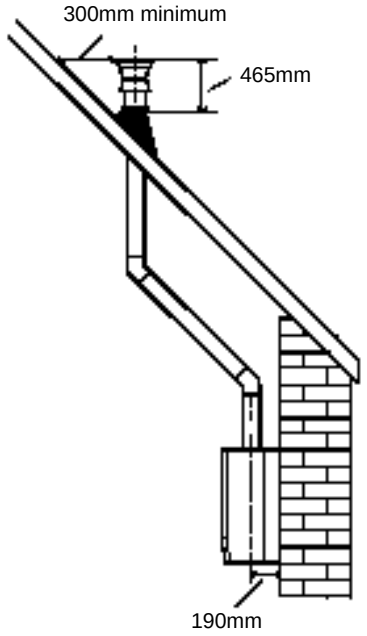

Fig. 9

IMPORTANT

The vertical flue terminal is 1.0 metre in length and cannot be cut; therefore it may be necessary to adjust the height of the appliance to suit or use a suitable extension.

Remove or discard the flue restrictor ring from the appliance flue outlet (see fig. 1), if the total flue length - including the allowance for any additional bends - exceeds 1.0metre (28e only).

Connect the vertical flue assembly to the boiler flue spigot using the 60mm & 100mm clips, gaskets & screws (supplied), ensuringthe correct seal is made. The flue support bracket (supplied with the vertical flue kit) can now be fitted.

If the vertical flue requires extension/s or additional bend/s, connect the required number of flue extensions or bends (up to the maximum equivalent flue length) between the boiler and vertical flue assembly (see fig. 8B).

NOTE

When cutting an extension to the required length, you must ensure that the excess is cut from the plain end of the extension and that the inner (60mm) pipe is 7,5mm longer than outer (100mm) pipe (see fig. 8B). Remove any burrs, and check that any seals are located properly.

You must ensure that the entire flue system is properly supported and connected.

4.5.3 TWIN FLUE SYSTEM

The Vokera twin flue system enables greater flue distances to be achieved (see 4.4.2) than that of the standard concentric flue system. It can be used for horizontal or vertical applications, however the twin flue system must be converted to the dedicated concentric flue kit for termination. It is essential that the installation of the twin flue system be carried out in strict accordance with these instructions.

GUIDANCE NOTES ON TWIN FLUE INSTALLATION

- The flue must have a fall back of 1° back to the appliance to allow any condensate that may form in the flue system to drain via the condensate drain. Consideration must also be given to the fact that there is the possibility of a small amount of condensate dripping from the terminal.
- Ensure that the entire flue system is adequately supported, use at least one bracket for each extension.
- The entire flue system must be adequately insulated to maintain heat within the flue system thereby reducing the possibility of condensate production.
- As the exhaust outlet pipe can reach very high temperatures it must be protected to prevent persons touching the hot surface.
- The condensate drain pipe must be connected in accordance with biulding regulations.

Twin flue accessories

Part No.	Description	Length
0225805	Horizontal flue terminal	1000 mm
0225810	Vertical flue terminal	1000 mm
300	Twin adapter kit 28e	N/A
362	Twin adapter kit 35e	N/A
0225770	Pitched roof flashing plate	N/A
0225765	Flat roof flashing plate	N/A
0225815	Condensate drain kit	N/A
0225820	0,25m extension (pair)	250mm
0225825	0,5m extension (pair)	500mm
0225830	1,0m extension (pair)	1000mm
0225835	2,0m extension (pair)	2000mm
0225840	45° bend (pair)	N/A
0225845	90° bend (pair)	N/A
0225850	Twin bracket (5)	N/A
0225855	Single bracket (5)	N/A

MOUNTING THE BOILER

The fixing holes for the wall-mounting bracket should now be drilled and plugged, an appropriate type and quantity of fixing should be used to ensure that the bracket is mounted securely. Once the bracket has been secured to the wall, mount the appliance onto the bracket.

Reduction for bends

Bend	Reduction in maximum flue length for each bend
45° bend	1,0 metre
90° bend	1,0 metre

4.5.3.1 INSTALLATION OF TWIN ADAPTOR KIT (see fig. 10)

- Remove the flue restrictor ring from the appliance flue outlet (if fitted).
- Insert the small restrictor ring (supplied with the twin adapter kit) if the total flue length - including the allowance for any bends - is less than 8 metres (only for 28e).
- Insert the exhaust connection manifold onto the appliance flue outlet.
- Place the silicone seal (supplied with twin adapter kit) over the rim of the exhaust connection manifold.
- Remove the blanking plate (located to the left of the appliance flue outlet) and – using the same screws – install the air baffle.

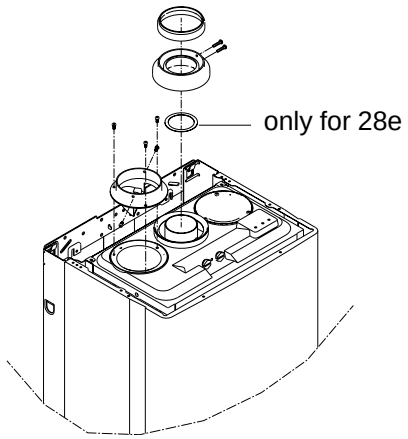

Fig. 10

4.5.3.2 INSTALLATION OF CONDENSATE DRAIN KIT (see fig. 11)

The condensate drain kit must be fitted within 1 metre of the appliance flue outlet. It is recommended that the condensate drain kit should be fitted in the vertical plane, however it can be fitted horizontally with care.

- Fit the first bend to the condensate drain kit or exhaust connection manifold by firmly pushing in to position.
- Using the two holes in the exhaust connection manifold as a guide, drill a 3mm hole in each and secure using the screws provided.
- Connect the air inlet pipe to the air baffle as above.
- The twin flue pipes extensions and accessories can now be installed by pushing together (the plain end of each extension or bend should be pushed approximately 50mm into the female socket of the previous piece).

Condensate drain kit

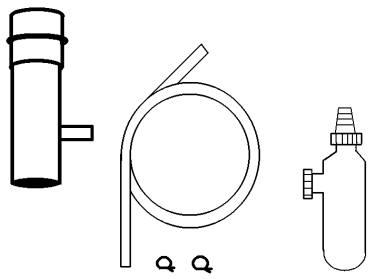

Fig. 11

4.5.3.3 HORIZONTAL TERMINATION (see fig. 12)

The twin flue system must be converted to the dedicated concentric flue kit for termination.

- The horizontal terminal is supplied with a built-in converter box and cannot be shortened.
- A 130mm hole is required for the passage of the concentric terminal through the wall.
- The air inlet pipe must always be level with or below, that of the exhaust pipe.

Depending on site conditions it may be preferable to install the terminal assembly prior to fitting the twin flue pipes.
Mark and drill a 125mm hole for the passage of the horizontal flue terminal, ensuring that there is a 1° fall back to the boiler (17mm per 1000mm).
Insert the terminal assembly into the flue hole.

Push-fit the twin flue pipes onto the concentric to twin converter box ensuring that the exhaust pipe connects to the exhaust connection on the concentric to twin converter.
If necessary cut the plain ends (male) of the twin flue pipes to allow connection to the concentric to twin converter.

NOTE

- Before cutting twin flue pipes ensure allowances have been made for connection onto the previous piece and onto the concentric to twin converter. The last twin flue pipes must be pushed 50mm onto the male spigots of the concentric to twin converter.
- You must ensure that the entire flue system is properly supported and connected.
- Seal the flue terminal assembly to the wall using cement or a suitable alternative that will provide satisfactory weatherproofing. The interior and exterior trim can now be fitted.

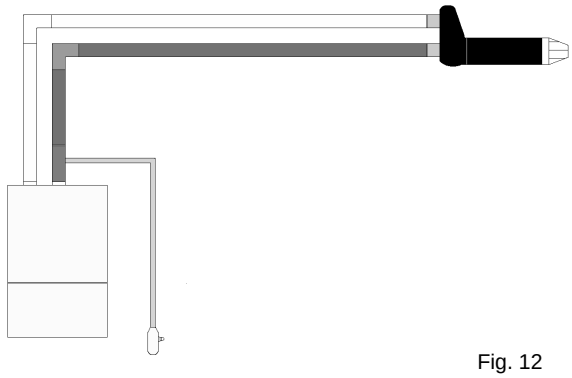

Fig. 12

4.5.3.4 VERTICAL TERMINATION (see fig. 13)

The twin flue system must be converted to the dedicated concentric flue kit for termination.

- The vertical terminal is supplied with a built-in converter box and cannot be shortened.
- A 125mm hole is required for the passage of the concentric terminal through the ceiling and/or roof.

Depending on site conditions it may be preferable to install the terminal assembly prior to fitting the twin flue pipes.
Fit the appropriate flashing plate to the roof and insert the vertical flue terminal through the flashing plate from the outside, ensuring that the collar on the flue terminal fits over the flashing.

Push-fit the twin flue pipes onto the concentric to twin converter ensuring that the exhaust pipe connects to the exhaust connection on the concentric to twin converter.
If necessary cut the plain ends (male) of the twin flue pipes to allow connection to the concentric to twin converter.

NOTE

- Before cutting twin flue pipes ensure allowances have been made for connection onto the previous piece and onto the concentric to twin converter. The last twin flue pipes must be pushed 50mm onto the male spigots of the concentric to twin converter.
- You must ensure that the entire flue system is properly supported and connected.
- Ensure that any horizontal sections of pipe have a 1° fall towards the appliance (17mm per 1000mm).

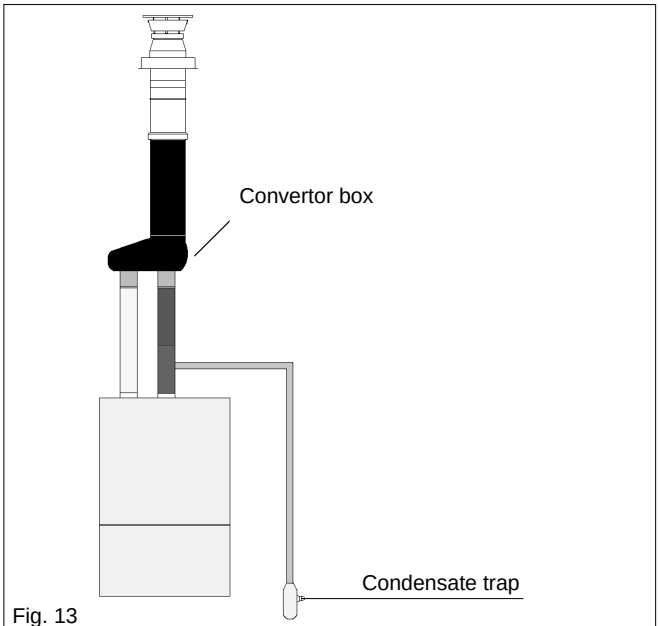

Fig. 13

4.6 CONNECTING THE GAS AND WATER

The appliance is supplied with an accessories pack that contains sealing washers and service valves. The service valves are of the compression type. When connecting pipe work to the valves, tighten the compression end first, then insert the sealing washers before tightening the valve to the appliance.

NOTE

It will be necessary to hold the valve with one spanner whilst tightening with another.

4.6.1 GAS (see fig. 6)

The appliance is supplied with a 15mm service valve, connect a 15mm pipe to the inlet of the valve and tighten both nuts.

NOTE

It will be necessary to calculate the diameter of the gas supply pipe to ensure the appliance has an adequate supply of gas.

4.6.2 FLOW & RETURN (see fig. 6)

The appliance is supplied with 22mm service valves for the flow and return connections, connect a 22mm pipe to the inlet of each valve and tighten both nuts.

NOTE

Depending on system requirments, it may be necessary to increase the size of the flow+return pipe work after the service value connections.

4.6.3 SAFETY VALVE (see fig. 6)

Connect the safety valve discharge pipe to the safety valve outlet and tighten.The discharge pipe must have a continuous fall away from the appliance to outside and allow any water to drain away thereby eliminating the possibility of freezing. The discharge pipe must terminate in a position where any water - possibly boiling - discharges safely without causing damage or injury, but is still visible.

4.7 ELECTRICAL CONNECTIONS

The electrical supply must be as specified in 3.7. A qualified electrician should connect the electrical supply to the appliance. If controls - external to the appliance - are required, a competent person must undertake the design of any external electrical circuits, please refer to section 8 for detailed instructions.

Any external control or wiring must be served from the same isolator as that of the appliance.

The supply cable from the isolator to the appliance must be 3-core flexible sized 0,75mm to BS 6500. Wiring to the appliance must be rated for operation in contact with surfaces up to 90°C.

4.7.1 CASING REMOVAL

To gain internal access to the appliance you must first remove the casing, proceed as follows outlined below:

- press the controls cover to release the controls cover catch;
- locate and unscrew the 2 screws that secure the controls fascia to the appliance casing (see fig. 14);
- gently lower the control fascia until it rests;
- remove the 2 screws located at either side of the casing (see fig. 6);
- lift the casing upward to disengage it from the top locating hooks and then remove.
- store the casing and screws safely until required. Re-fit in the reverse order.

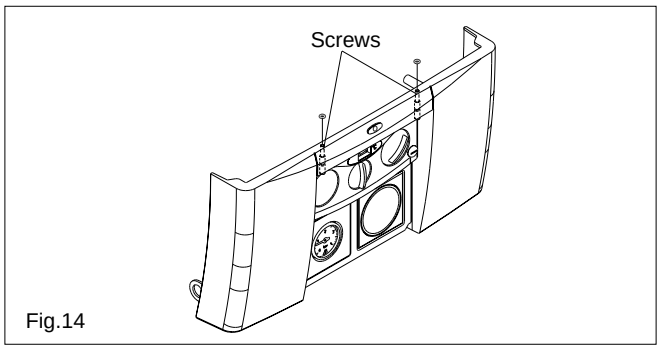

Fig.14

4.7.2 APPLIANCE TERMINAL BLOCK

The appliance terminal block is located on the left side of the control fascia (see fig.15). Locate and remove the screws securing the terminal block cover.

NOTE

The appliance comes with a factory fitted link to allow basic operation of the boiler via the mode selector switch. If it is anticipated that external controls will be required please refer to the wiring diagrams in section 8 for more detailed information.

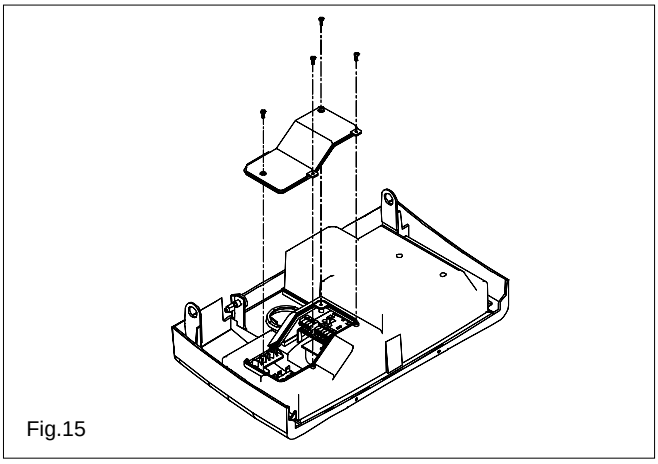

Fig.15

4.7.3 CONNECTING THE MAINS (230V) INPUT (see fig. 16)

Remove the terminal block cover as described in 4.7.2. Pass the cable through the cable anchorage (see fig. 6). On the terminal block there are 7 terminals from Right to Left, they are:

1 LIVE
2 NEUTRAL
3 230V output
4 230V input
5 (spare)
6 (spare)
7 (spare)
8 (spare)

Connect the supply cable wires (live & neutral) to their corresponding terminals on the appliance terminal block. Connect the EARTH wire to the EARTH block (see fig. 16) ensuring that it's left slightly longer that the others, this will prevent strain on the earth wire should the cable become taut.

Do not remove the link wire (between 3 & 4) unless additional external controls are to be fitted (see section 8). Re-fit the appliance terminal block cover.

The securing screw on the cable anchorage should now be tightened. This must be done before the control fascia is re-fitted in the upright position. The appliance casing and screws can now be re-fitted.

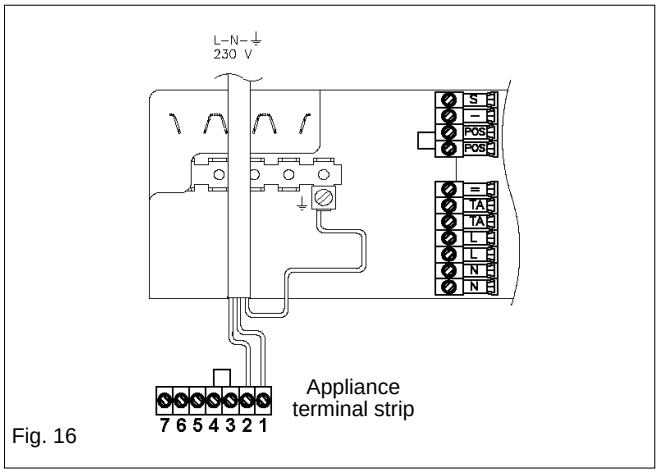

Fig. 16

SECTION 5 COMMISSIONING

5.1 GAS SUPPLY INSTALLATION

Inspect the entire installation including the gas meter, test for soundness and purge. Refer to BS 6891 for specific instruction.

5.2 THE HEATING SYSTEM

The appliance contains components that may become damaged or rendered inoperable by oils and/or debris that are residual from the installation of the system, consequently it is essential that the system be flushed in accordance with the following instructions.

5.3 INITIAL FILLING OF THE SYSTEM

Ensure both flow & return service valves are open, remove appliance casing as described in 4.7.1, identify the automatic air release valve and loosen the dust cap by turning cap anti-clockwise one full turn. IMPORTANT, THERE ARE NO MANUAL AIR RELEASE VALVES LOCATED ON THE APPLIANCE. Ensure all manual air release valves located on the heating system are closed. Using the method of filling as described in fig. 5, slowly proceed to fill the system. As water enters the system the pressure gauge will begin to rise. Once the gauge has reached 1bar close the filling valve and begin venting all manual air release valves, starting at the lowest first. It may be necessary to go back and top-up the pressure until the entire system has been filled. Inspect the system for water soundness, rectifying any leaks.

5.4 INITIAL FLUSHING

The whole of the heating system must be flushed as detailed in 5.8. Open all radiator or heating valves and the appliance flow & return service valves. Drain the boiler and system from the lowest points. Open the drain valve full bore to remove any installation debris from the boiler prior to lighting. Refill the boiler and heating system as described in 5.3.

5.5 PRE-OPERATION CHECKS

Before attempting to initial lighting of the appliance, the following checks must be carried out:

- ensure all gas service valves from the meter to the appliance are open and the supply pipe has been properly purged;
- ensure the proper electrical checks have been carried out (see 7.7), particularly continuity, polarity and resistance to earth;
- ensure the 3 amp fuse – supplied with the appliance – has been fitted;
- ensure the system has been filled, vented, and the pressure set to 1 bar;
- ensure the flue system has been fitted properly and in accordance with the instructions;
- ensure all appliance service valves are open.

5.6 INITIAL LIGHTING

Ensure the electrical supply to the appliance is switched on. Switch the time clock or programmer to an 'on' position and ensure all external controls

are also calling for heat. Turn the mode selector knob to the 'on' position (fig. 1).

The appliance will now go through an ignition sequence as described in 1.2. Should the appliance fail to ignite, refer to 5.5 and/or section 7 (fault finding).

5.7 CHECKING THE BURNER PRESSURE

Although the burner pressure is factory set, it is necessary to check it during commissioning. Isolate the appliance from the electrical supply and attach a suitable manometer to the gas valve outlet test nipple (see fig. 17). Light the boiler as described in 5.6 and compare the reading on the manometer with the value described in 2.2. If adjustement is required, follow the detailed instructions in section 7 (7.3).

Once the burner pressure has been checked, isolate the appliance from the electrical supply, remove the manometer, and tighten the gas valve outlet test nipple.

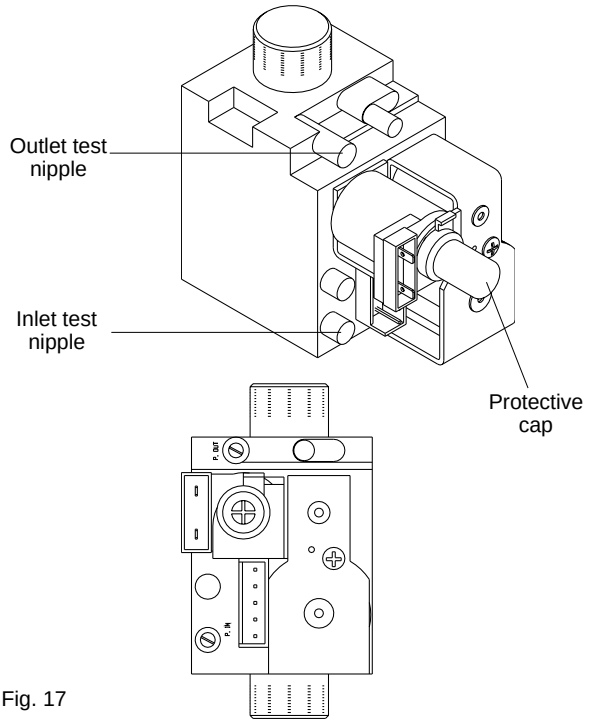

Fig. 17

5.8 FINAL FLUSHING OF THE HEATING SYSTEM

The system shall be flushed in accordance with BS 7593. If a cleanser is to be used, it shall be from a reputable manufacturer* and shall be administered in strict accordance with the manufacturers instructions.

*Both Sentinel and Fernox manufacture products that have proved suitable for use with Vokera appliances. Vokera Ltd. cannot comment on the suitability of any other such product with our appliances.

5.8.1 INHIBITORS

See 3.8.

5.9 SETTING THE BOILER OPERATING TEMPERATURE

The flow oulet temperature can be adjusted between 40°C - 80°C via the thermostat knob (see fig. 1).

5.10 SETTING THE SYSTEM DESIGN PRESSURE

The design pressure should be a minimum of 1 bar and a maximum of 1,5 bar.

The actual reading should ideally be 1 bar plus the equivalent height in metres (0,1 bar = 1 metre) to the highest point in the system above the base of the appliance (up to the maximum of 1,5 bar total).

N.B. The safety valve is set to lift at 3 bar/30 metres/45 psig. To lower the system pressure to the required value, pull lever on head of safety valve to release water until the required figure registers on the pressure gauge (see fig. 1).

5.11 REGULATING THE CENTRAL HEATING SYSTEM

Fully open all radiator and circuit valves and run the appliance for both heating and hot water until heated water is circulating. If conditions are warm remove any thermostatic heads. Adjust radiator return valves and any branch circuit return valves until the individual return temperatures are correct and are approximately equal.

5.12 FINAL CHECKS

- ENSURE ALL TEST NIPPLES ON THE APPLIANCE GAS VALVE HAVE BEEN TIGHTENED AND CHECKED FOR SOUNDNESS.
- ENSURE THE APPLIANCE FLUE SYSTEM IS FITTED CORRECTLY AND IS PROPERLY SECURED.
- ENSURE ALL PIPE WORK IS RE-CHECKED FOR SOUNDNESS.
- RE-FIT APPLIANCE CASING.
- COMPLETE APPLIANCE LOGBOOK.

Complete details of the boiler, controls, installation and commissioning in the logbook supplied with the boiler. This is an important document, which must be correctly completed and handed to the user. Failure to install and commission the appliance to the manufacturers instructions may invalidate the warranty.

5.13 INSTRUCTING THE USER

Hand over all documentation supplied with this appliance – including these instructions – and explain the importance of keeping them in a safe place.

Explain to the user how to isolate the appliance from the gas, water and electricity supplies, and the locations of all drain points.

Show the user how to operate the appliance and its associated controls correctly.

Show the user the location of the filling valve and how to top-up the system pressure correctly, and show the location of all manual air release points.

Explain to the user how to turn off the appliance for both long and short periods, and advise on the necessary precautions to prevent frost damage. Explain to the user that for continued safe and efficient operation, the appliance must be serviced annually by a competent person.

6.1 GENERAL

To ensure the continued safe and efficient operation of the appliance, it is recommended that it is checked and serviced at regular intervals.

The frequency of servicing will depend upon the particular installation conditions, but in general, once per year should be adequate.

It is the law that any servicing work is carried out by a competent person such as a Vokera engineer, an approved service agent, British Gas, or other CORGI registered personnel.

The following instructions apply to the appliance and its controls, but it should be remembered that the central heating and the domestic hot water system will also require attention from time to time.

6.2 ROUTINE ANNUAL SERVICING

- Check the operation of the appliance and ensure it functions as described in section 7.
- Compare the performance of the appliance with its design specification. The cause of any noticeable deterioration should be identified and rectified without delay.
- Thoroughly inspect the appliance for signs of damage or deterioration especially the flue system and the electrical apparatus.
- Check and adjust – if necessary – all burner pressure settings (see 7.3).
- Check and adjust – if necessary – the system design pressure (see 5.10).
- Carry out an analysis of the flue gases (see 7.4), and visually check the condition of the entire flue assembly.
- Compare the results with the appliance design specification. Any deterioration in performance must be identified and rectified without delay.
- Ensure both flue venturis are clean and free from any debris or obstruction.
- Ensure both the burner and heat exchanger are clean and free from any debris or obstruction.
- Inspect all joints for signs of leakage and repair if necessary.
- Refer to the commissioning section and/or replacement of parts section for detailed instruction if required.

6.3 REPLACEMENT OF COMPONENTS

Although it is anticipated that this appliance will give years of reliable, trouble free service, the life span of components will be determined by factors such as operating conditions and usage. Should the appliance develop a fault, the fault finding section will assist in determining which component is malfunctioning.

6.4 COMPONENT REMOVAL PROCEDURE

To remove a component, access to the interior of the appliance is essential. Isolate the appliance from the electrical supply and remove the fuse. And when necessary, close all service valves on the appliance, remove the appliance casing as described in section 4.7.1, drain the water content from the appliance via the safety valve. Ensure some water absorbent cloths are available to catch any residual water that may drip from the appliance or removed component. Undertake a complete commissioning check as detailed in section 5, after replacing any component. **ALWAYS TEST FOR GAS SOUNDNESS IF ANY GAS CARRYING COMPONENTS HAVE BEEN REMOVED OR DISTURBED.**

6.5 PUMP HEAD (see fig. 18)

Carry out component removal procedure as described in 6.4.
Using a 4mm Allen key or 'T' bar, unscrew and remove the four Allen screws that hold the pump in position, pull firmly on the pump head to release it from the base. Disconnect the electrical leads. Replace in the reverse order.

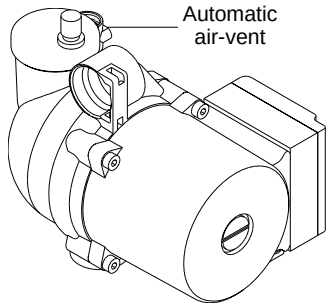

Fig. 18 Complete pump assembly

6.6 SAFETY VALVE (see fig. 19)

Carry out component removal procedure as described in 6.4.
Disconnect the outlet pipe from the safety valve, remove safety valve locking screw from appliance manifold.
Replace in the reverse order.

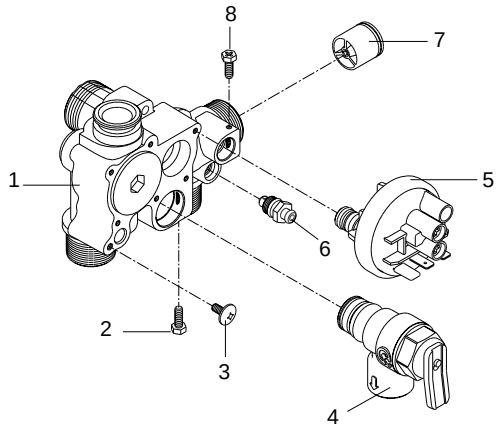

1 Hydraulic manifold
2 Safety valve locking screw
3 Pressure gauge locking screw
4 Safety valve
5 Water pressure switch
6 Bleed/drain nipple
7 Automatic bypass
8 Water pressure switch, locking screw

Fig. 19

6.7 AUTOMATIC AIR RELEASE VALVE (see fig. 18) (AAV)

Carry out component removal procedure as described in 6.4.
Using a suitable pair of pump pliers, unscrew the AAV from pump base.
Replace in the reverse order.

6.8 WATER PRESSURE SWITCH (see fig. 19)

Carry out component removal procedure as described in 6.4.
Remove locking screw and the water pressure switch from the heating manifold, and - after taking note of the electrical connections - disconnect the wiring.
Replace in the reverse order.

6.9 PRESSURE GAUGE (see fig. 19)

Carry out component removal procedure as described in 6.4.
Remove pressure gauge locking screw, located on pump base, and withdraw the pressure gauge pipe, locate the spring tabs on the pressure gauge body, push and hold tabs in, to enable extraction of the gauge from its location.
Replace in the reverse order.

6.10 NTC THERMISTORS (see fig. 20)

Carry out component removal procedure as described in 6.4.

Unclip and remove the air chamber cover, and remove the right side air baffle. Disconnect thermistor electrical plug. Using a 13mm spanner slacken and remove the thermistor and sealing washer.
Replace in the reverse order.

6.11 HIGH LIMIT THERMOSTAT (see fig. 20)

Carry out component removal procedure as described in 6.4.
Unclip and remove the air chamber cover. Pull of electrical connections from the high limit thermostat, slacken and remove retaining screws.
Replace in the reverse order.

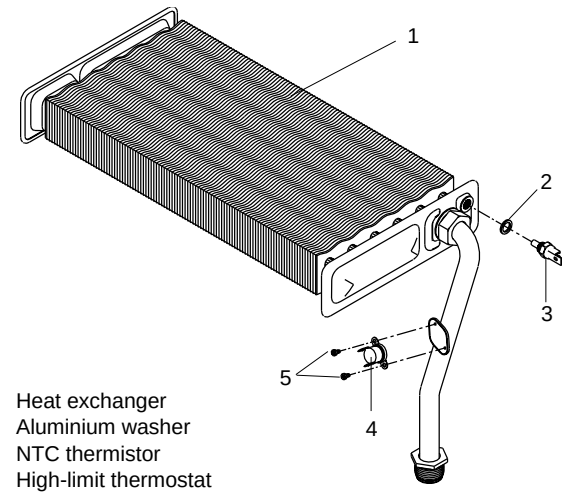

1 Heat exchanger
2 Aluminium washer
3 NTC thermistor
4 High-limit thermostat
5 Retaining screws

Fig. 20

6.12 PRINTED CIRCUIT BOARD (PCB)

Carry out component removal procedure as described in 6.4. Located and remove the five screws which secure the PCB cover & terminal cover, then remove cover, after carefully taking note of all wiring connections, disconnect all wiring from the PCB, locate and remove the PCB securing screws, remove PCB.
Replace in the reverse order.

NOTE

Ensure that the replacement PCB has the correct "Jumper Tag" configuration (see section 8).

6.13 GAS VALVE (see fig. 21)

Carry out component removal procedure as described in 6.4.
The gas valve must be changed as complete unit. Disconnect the electrical plug and leads from the gas valve. Disconnect compensator tube from gas valve regulator. Slacken and unscrew gas valve inlet and outlet connections. **Please note**, the sealing washers must be discarded and replaced with new sealing washers. Locate and remove gas valve retaining screws on the underside of the boiler if required, the gas valve can now be removed. Replace in the reverse order. Check and adjust burner pressure settings.
WARNING, A GAS SOUNDNESS CHECK MUST BE CARRIED OUT.

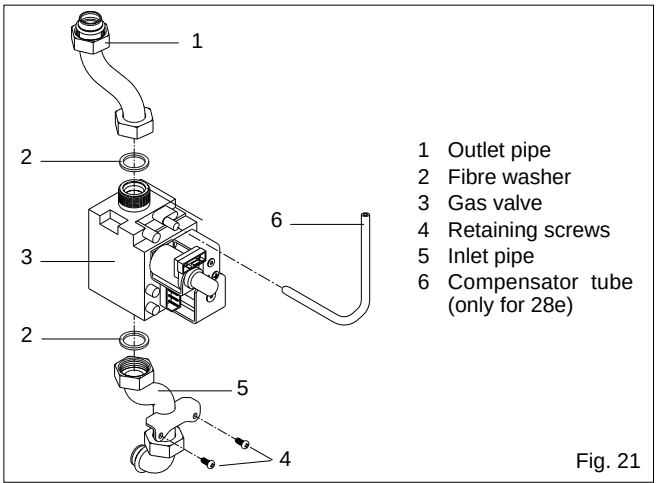

1 Outlet pipe
2 Fibre washer
3 Gas valve
4 Retaining screws
5 Inlet pipe
6 Compensator tube (only for 28e)

Fig. 21

6.14 INTEGRAL TIME SWITCH (if fitted)

Carry out component removal procedure as described in 6.4.
Locate and remove the terminal cover and securing screws (2), locate and remove the time clock retaining screws, remove time clock. Disconnect wiring after carefully taking note of alla electrical connections.
Replace in the reverse order.

6.15 BURNER, INJECTORS AND SPARK/SENSE ELECTRODE (see fig. 22)

Carry out component removal procedure as described in 6.4.
Unclip and remove the air chamber cover.
Locate and remove the screws securing the front combustion cover, pull the cover towards you before lifting and disengaging.

Disconnect the electrode lead from its connector at the rear of the boiler. Remove the retaining screw for the burner thermostat and remove the thermostat. Locate and remove the four screws which secure the burner in position, gently ease the burner out of its location whilst also easing the electrode sealing grommet from its seating. Once the burner has been removed, locate the burner injectors - located to the rear of the combustion chamber - and remove (if necessary).
Replace in the reverse order. **Please note**, the injector sealing washers must be replaced if the injectors have been removed, ensure all seals are in good condition, taking care to ensure they are replaced correctly.

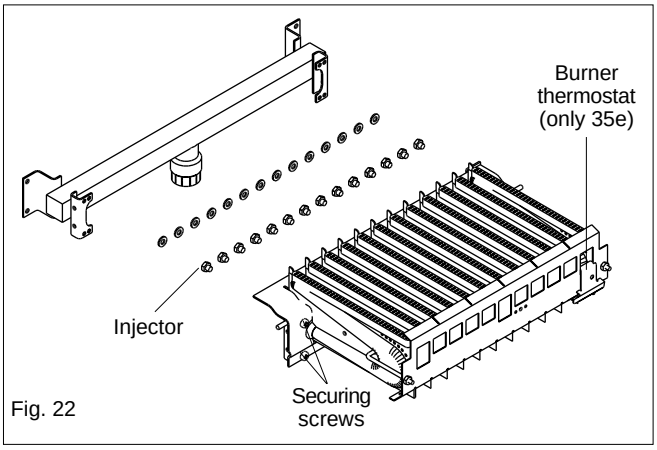

Fig. 22

6.16 FLUE FAN (see fig. 23)

Carry out component removal procedure as described in 6.4.
Unclip and remove the air chamber cover, gently pull the cover towards you before lifting and disengaging. Locate and remove the six screws that secure the front combustion cover, then remove the cover. Disconnect the electrical connections and silicone tubes attached to the fan, noting their positions. Locate and remove the three screws that secure the flue hood and air baffles, ease the fan & flue hoos assembly from its location. Locate and remove the four screws that secure the fan to the flue hood. Remove the fan to flue elbow.
Replace in the reverse order. Ensure all seals are in good condition, taking care to ensure they are replaced correctly.

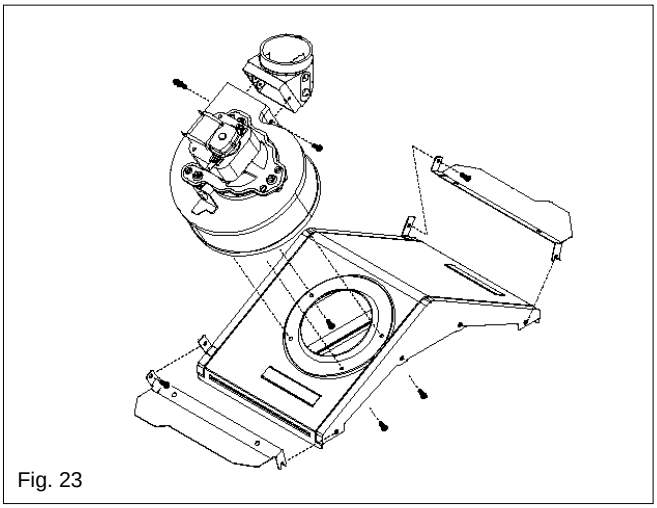
Fig. 23

6.17 HEAT EXCHANGER (see fig. 24)

Carry out component removal procedure as described in 6.4.
Unclip and remove the air chamber cover, gently pull the cover towards you before lifting and disengaging. Locate and remove the six screws that secure the front combustion cover, then remove the cover. Disconnect the flow and return connections on the heat exchanger. The heat exchanger can now be withdrawn from the appliance.
Replace in the reverse order. Ensure all seals are in good condition, taking care to ensure they are replaced correctly.

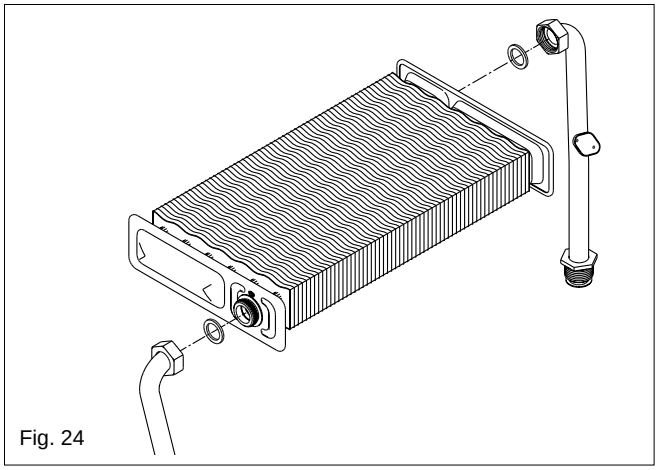
Fig. 24

6.18 AIR PRESSURE SWITCH (see fig. 1)

Carry out component removal procedure as described in 6.4.
Unclip and remove the air chamber cover, gently pull the cover towards you before lifting and disengaging. Locate and remove the two screws holding the air pressure switch to the air chamber. Disconnect the electrical connections and silicone tubes attached to the air pressure switch, noting their positions.
Replace in the reverse order. Ensure all seals are in good condition, taking care to ensure they are replaced correctly.

6.19 EXPANSION VESSEL fig. 1

Should the removal and replacement of the expansion vessel be deemed impractical, an external expansion vessel may be fitted to the return pipe as close to the appliance as possible.

6.19.1 EXPANSION VESSEL REMOVAL (with sufficient clearance above)

Carry out component removal procedure as described in 6.4.
Disconnect the flue from the appliance.
Disconnect the flexible expansion pipe from the vessel (Fig. 24A). Locate and remove the four screws that secure the vessel top holding plate, remove the plate. The expansion vessel can now be removed. Replace in the reverse order. Ensure all seals are in good condition, taking care to ensure they are replaced correctly.

6.19.2 EXPANSION VESSEL REMOVAL (with insufficient clearance above)

Carry out component removal procedure as described in 6.4.

Disconnect the flue elbow or pipe from the appliance flue outlet. Unclip and remove the air chamber cover, gently pull the cover towards you before lifting and disengaging. Remove the RH side panel of the air chamber. Disconnect the wiring to the fan, pressure switch, primary thermistor, & overheat thermostat. Carefully unclip the wires from the air chamber and withdraw the wiring & grommet from the air chamber. Disconnect the electrode lead and burner thermostat wires

Disconnect the outlet gas pipe and the flow & return pipes from the air chamber.

Locate and remove the 2-screws that secure the lower section of the air chamber. Locate and remove the 2-screws that secure the upper section of the air chamber. The complete air chamber assembly can now be lifted clear from the appliance. Disconnect the flexible expansion pipe from the vessel (fig. 40). Locate and remove the 2-screws that secure the vessel (1). The expansion vessel can now be removed. Replace in the reverse order. Take extreme care when refitting the wiring to the air chamber. Ensure all seals are in good condition, taking care to ensure they are replaced correctly.

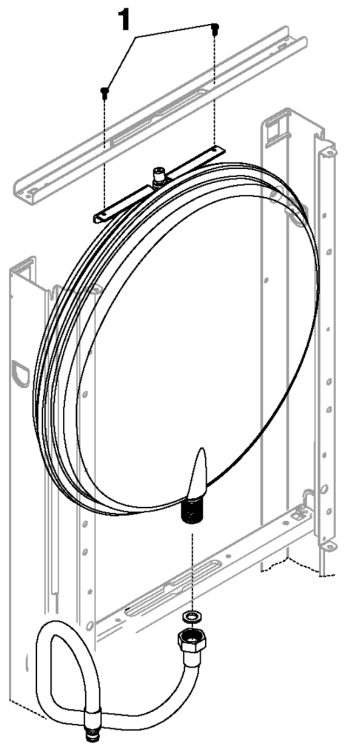

Fig. 24A

7.1 CHECKING APPLIANCE OPERATION

When carrying out any repairs or servicing to the appliance, the relevant commissioning procedure must be undertaken to ensure the continued safe operation of the appliance. Particular attention should be made to ensure gas soundness, water soundness, and the electrical integrity of the appliance.

7.2 APPLIANCE MODE OF OPERATION

When there is a request for heat and/or hot water via the programmer/time clock and/or any external control, the pump and fan are started.

NOTE

There must be sufficient system water pressure (min. 0,5 bar) to ensure the water pressure switch is activated. If there is insufficient system pressure, the pump and fan will be prevented from operating. When the fan runs, it proves the differential air pressure switch which in-turn allows an ignition sequence to begin.

NOTE

The ignition sequence lasts approximately 5 seconds, during which the appliance will continue to spark even if the burner has already lit. If the spark/sensing electrode does not sense ignition the appliance will then go to lockout. Ignition is sensed by the electronic circuitry to ensure flame stability at the burner. Once successful ignition has been achieved, the electronic circuitry allows 75% of the full gas rate though the appliance. After 15 minutes the gas rate is increased to maximum (100%).

When the appliance reaches the desired temperature the burner will shut down and the boiler will perform a three-minute anti-cycle (timer delay).

NOTE

The timer delay can be de-activated by the insertion of a “jumper” on the PCB or by isolating the appliance from the electrical supply for 30 seconds. When the request for heat and/or hot water has been satisfied, the appliance pump and/or fan, will continue to circulate to dissipate any residual heat within the appliance.

7.3 CHECKING AND ADJUSTING BURNER PRESSURE (see fig. 17)

Altough the burner pressure is factory set, it is necessary to check it during servicing or if the gas valve has been removed. Isolate the appliance from the electrical supply and attach a suitable manometer to the gas valve outlet test nipple. Remove the compensator tube (28e only).

7.3.1 SETTING THE MAXIMUM BURNER PRESSURE

Light the boiler as described in 5.6 and compare the reading on the manometer with the value described in 2.2. If adjustement is required, remove the protective cap from the gas valve modulating coil assembly and turn the outer (10mm) nut clockwise to increase, or counter-clockwise to decrease the burner pressure.

NOTE

You should ensure that all radiators or heat emitters are fully open during the above procedure. This will ensure that the output of the boiler (burner pressure) is not compromised due to a high flow temperature.

7.3.2 SETTING THE MINIMUM BURNER PRESSURE

Once the maximum burner pressure has been checked and/or adjusted, remove one of the grey wires from the modulating coil. Compare the reading on the manometer with the value described in 2.2. If adjustement is required, turn the inner (red) cross-head screw clockwise to increase, or counter-clockwise to decrease the burner pressure, whilst ensuring that the outer(10mm) nut does not move. When checking and/or adjustement has been completed, isolate the appliance from the electrical supply, replace the protective cap, refit the compensator tube, refit the grey wire to the modulating coil, remove the manometer, and tighten the outlet test nipple.

IMPORTANT: A GAS SOUNDNESS CHECK MUST BE CARRIED OUT.

7.4 COMBUSTION ANALYSIS TEST

A combustion analysis check can easily be caried out on the appliance via the test points located on the top of the appliance, however you must check that the burner pressures are set correctly (see 7.3).

- Insert the flue gas analyser probe into the right hand test point (see fig. 25).
- Locate and remove the protective cap that conceals the “CO mode” button (see fig. 25A).
- Light the boiler as described in 5.6 and press the “CO mode” button once.
- The boiler will now enter the combustion analysis mode (CO mode) for a period of 15 minutes. During this time it will remain on full gas and “CO” will be displayed on the LED display.
- Once the flue gas analysis has been made, press the “CO mode” to resume normal operation.

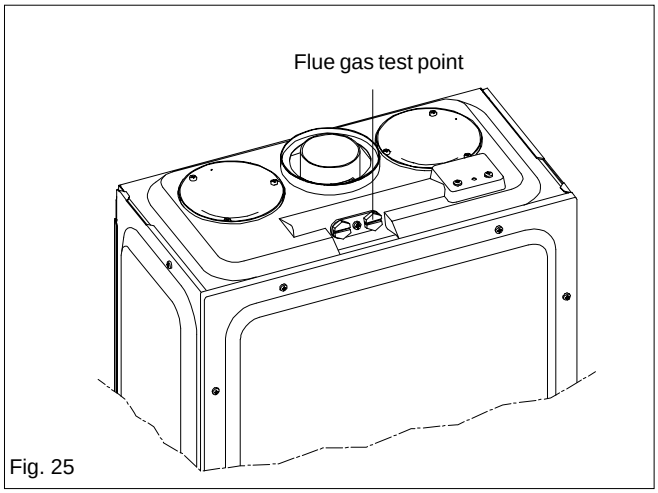

Fig. 25

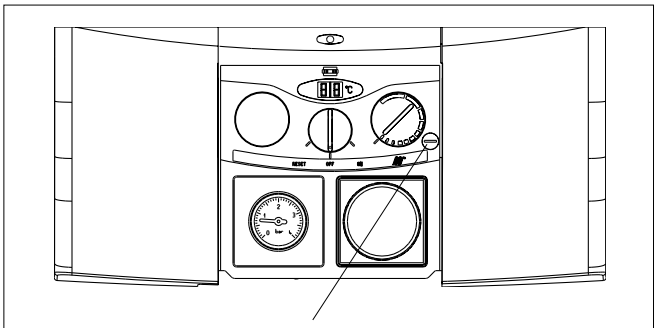

Fig. 25A CO mode button (beneath protective cap)

7.5 CHECKING THE EXPANSION VESSEL

Carry out the component removal procedure as described in 6.4. You must ensure that the boiler is completely drained of water.

Using a suitable pressure gauge, remove dust cap on expansion vessel and check the charge pressure. The correct charge pressure should be 1,0 bar +/- 0,1 bar. If the charge pressure is less, use a suitable pump to increase the charge.

NOTE

You must ensure the safety valve is in the open position whilst re-charging takes place. Replace the dust cap and carry out the relevant commissioning procedure (section 5).

7.6 EXTERNAL FAULTS

Before carrying out any fault-finding or component replacement, ensure the fault is not attributable to any aspect of the installation.

7.6.1 INSTALLATION FAULTS

SYMPTOM	POSSIBLE CAUSE
No ignition	Check external wiring. Check external controls.
No hot water	Check external controls.
No central heating	Check external controls.

FAULT CODE	POSSIBLE CAUSES
01	Gas supply turned off. Gas line requires purging. Reversed polarity. Broken, internal flue joint.
02	Flow/return valves closed. Stuck pump.
03	Debris in flue system. Debris in flue venturi. Flue exceeds max. length
04	Insufficient pressure. Air in boiler.

7.7 ELECTRICAL CHECKS

Any electrical checks must be carried out by a suitably qualified person.

7.7.1 EARTH CONTINUITY TEST

Isolate the appliance from the electrical supply, and using a suitable multi-meter carry out a resistance test. Connect test leads between an appliance earth point and the earth wire of the appliance supply cable. The resistance should be less than 1 ohm. If the resistance is greater than 1 ohm check all earth wires and connectors for continuity and integrity.

7.7.2 SHORT CIRCUIT CHECK

Isolate the appliance from the electrical supply, and using a suitable multi-meter, carry out a short circuit test between the Live & Neutral connections at the appliance terminal strip (see fig.16).

Repeat above test on the Live & Earth connections at the appliance terminal strip (see fig.16).

NOTE

Should it be found that the fuse has failed but no fault is indicated, a detailed continuity.

Check will be required to trace the fault. A visual inspection of components may also assist in locating the fault.

7.7.3 POLARITY CHECK

With the appliance connected to the electrical supply and using a suitable multi-meter, carry out the following voltage tests:

- connect test leads between the Live & Neutral connections at the appliance terminal strip (see fig.16), the meter should read approximately 230V ac. If so proceed to next stage. If not, see 7.7.4.
- connect test leads between the Live & Earth connections at the appliance terminal strip (see fig.16), the meter should read approximately 230V ac. If so proceed to next stage. If not, see 7.7.4.
- Connect test leads between the Neutral & Earth connections at the appliance terminal strip (see fig.16), the meter should read approximately 0 – 15Vac. If so polarity is correct. If not, see 7.7.4.

7.7.4 REVERSED POLARITY OR SUPPLY FAULT

Repeat the above tests at the appliance isolator, if testing reveals correct polarity and/or supply at the isolator, re-check wiring and connections between the isolator and the appliance.

If tests on the isolator also reveal reversed polarity or a supply fault, consult the local electricity supplier for advice.

7.7.5 RESISTANCE TO EARTH CHECK

Isolate the appliance from the electrical supply, and using a suitable multi-meter carry out a resistance test. Connect test leads between the Live & Earth connections at the appliance terminal strip (see fig. 16), if the meter reads other than infinity there is a fault that must be isolated, carry out a detailed continuity check to identify the location of the fault.

IMPORTANT

These series of checks must be carried out before attempting any fault-finding procedures on the appliance. On completion of any task that required the disconnection and re-connection of any electrical wiring or component, these checks must be repeated.

7.8 FAULT FINDING

Before attempting any fault-finding, the electrical checks as detailed in 7.7 must be carried out.

Isolate the appliance from the electrical supply. Disconnect any external controls from terminals 3 & 4 of the appliance terminal strip, and make safe. Insert a solid link-wire between terminals 3 & 4.

Ensure jumper tags are fitted to the main PCB at:

- JP5
- JP7
- JP8 (natural gas only).
- M7

Restore the electrical supply to the boiler and turn the selector switch to the on position. The boiler should now function as described in section 7.2. Should the boiler fail to respond, the internal fuses and connectors should be checked to ensure integrity and continuity. If the boiler still fails to respond, refer to the detailed fault-finding flowcharts overleaf.

7.9 FAULT CODES

When the boiler displays a fault code, the appropriate code is shown on the display, accompanied by a flashing red LED. To reset the boiler, slowly turn the mode selector switch to the reset position then back to the on position.

If the boiler does not reset, refer to the following section and the detailed fault-finding flowcharts overleaf.

FAULT CODE 01

Fault code 01 appears when the burner has failed to ignite, or the flame supervision system has failed to detect a flame.

- Check incoming gas supply.
- Check spark electrode.
- Check polarity.
- Check integrity of flue system.
- Check gas valve.
- Check ignition control PCB.

FAULT CODE 02

Fault code 02 appears if the boiler has overheated.

- Check high limit thermostat.
- Check thermistor.
- Check pump.
- Check gas pressures.

FAULT CODE 03

Fault code 03 appears if the boiler of flue system has developed a fault.

- Check operation of fan.
- Check flue venturi.
- Check air pressure switch.
- Check flue system.

FAULT CODE 04

Fault code 04 appears if the pressure in the boiler is low.

- Check water pressure.
- Check water pressure switch.
- Check water pressure gauge.

FAULT CODE 05

PCB fault.

FAULT CODE 06

PCB fault (ensure JP5 is inserted)

FAULT CODE 07

Fault code 07 appears if the thermistor has developed a fault.

- Check thermistor.
- Check wiring continuity.

FAULT CODE 08 (only for 35e)

Fault code 08 appears if the burner thermostat has been activated.

- Check gas pressures
- Check burner thermostat
- Check wiring continuity

FAULT CODE 09

PCB fault.

FAULT FINDING TEST ‘A’ (Mynute 28e-35e): turn the selector switch to the reset position

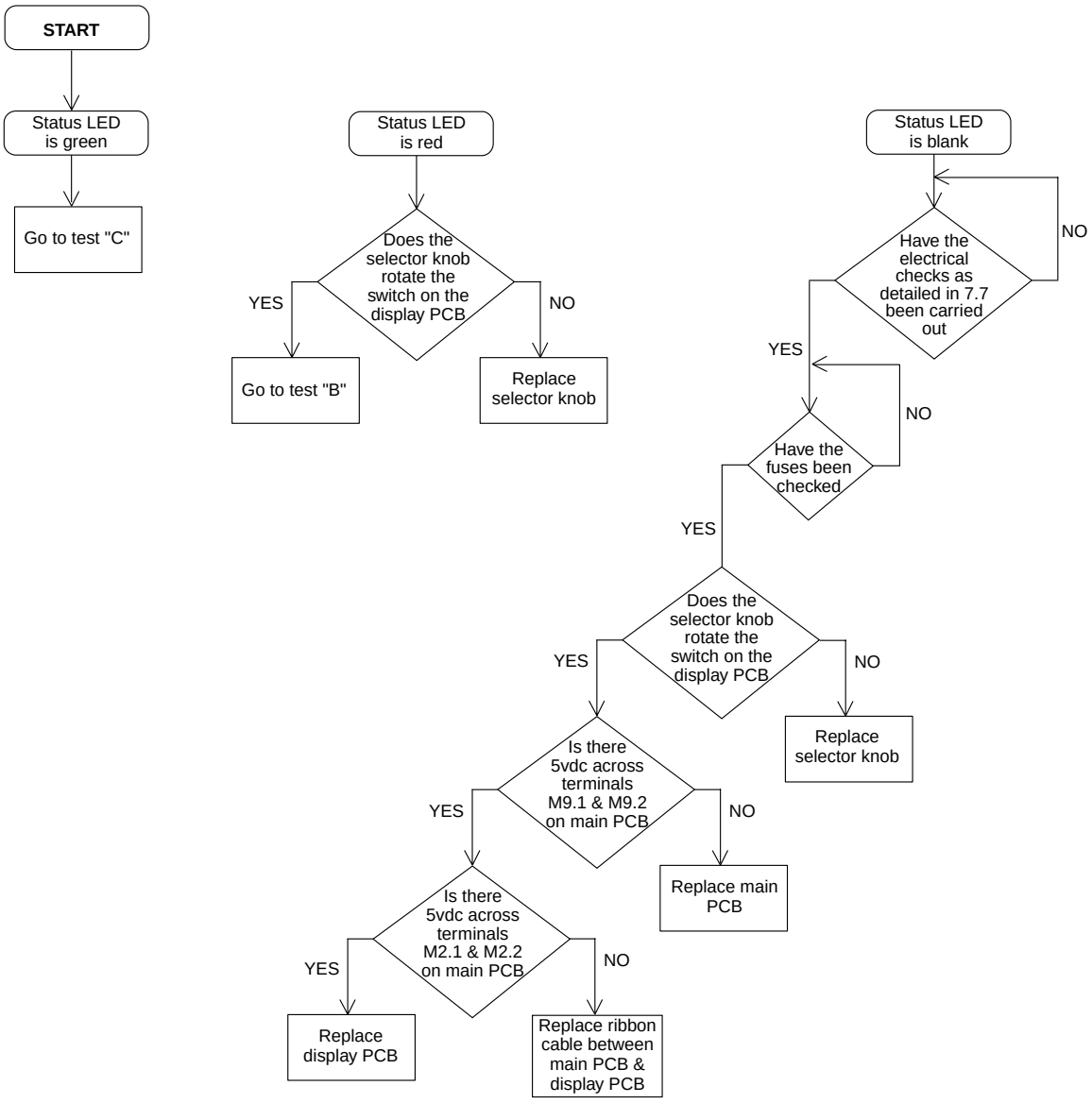

FAULT FINDING TEST ‘B’ (Mynute 28e-35e): turn the selector switch to the “on” position

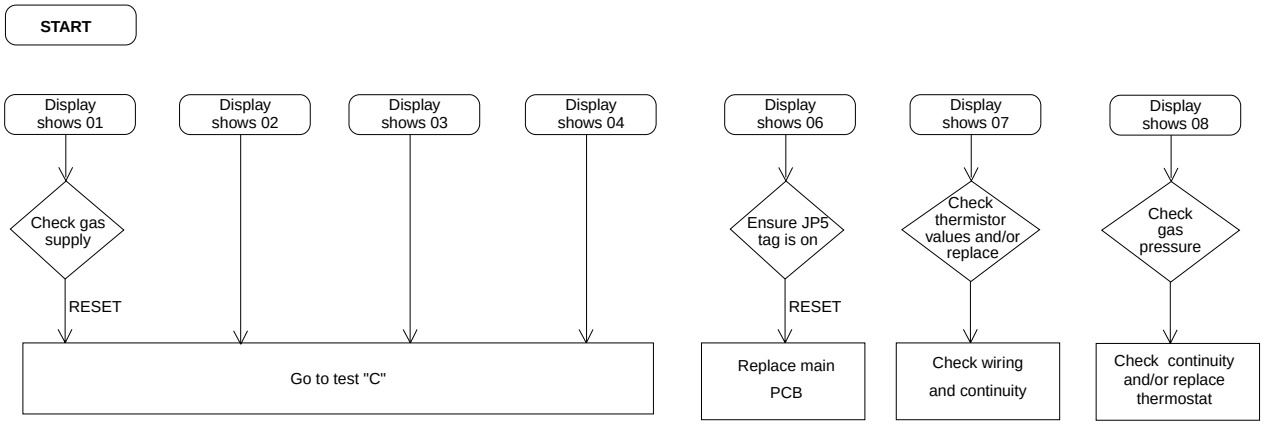

FAULT FINDING TEST ‘C’(Mynute 28e): turn the selector to the “on” position

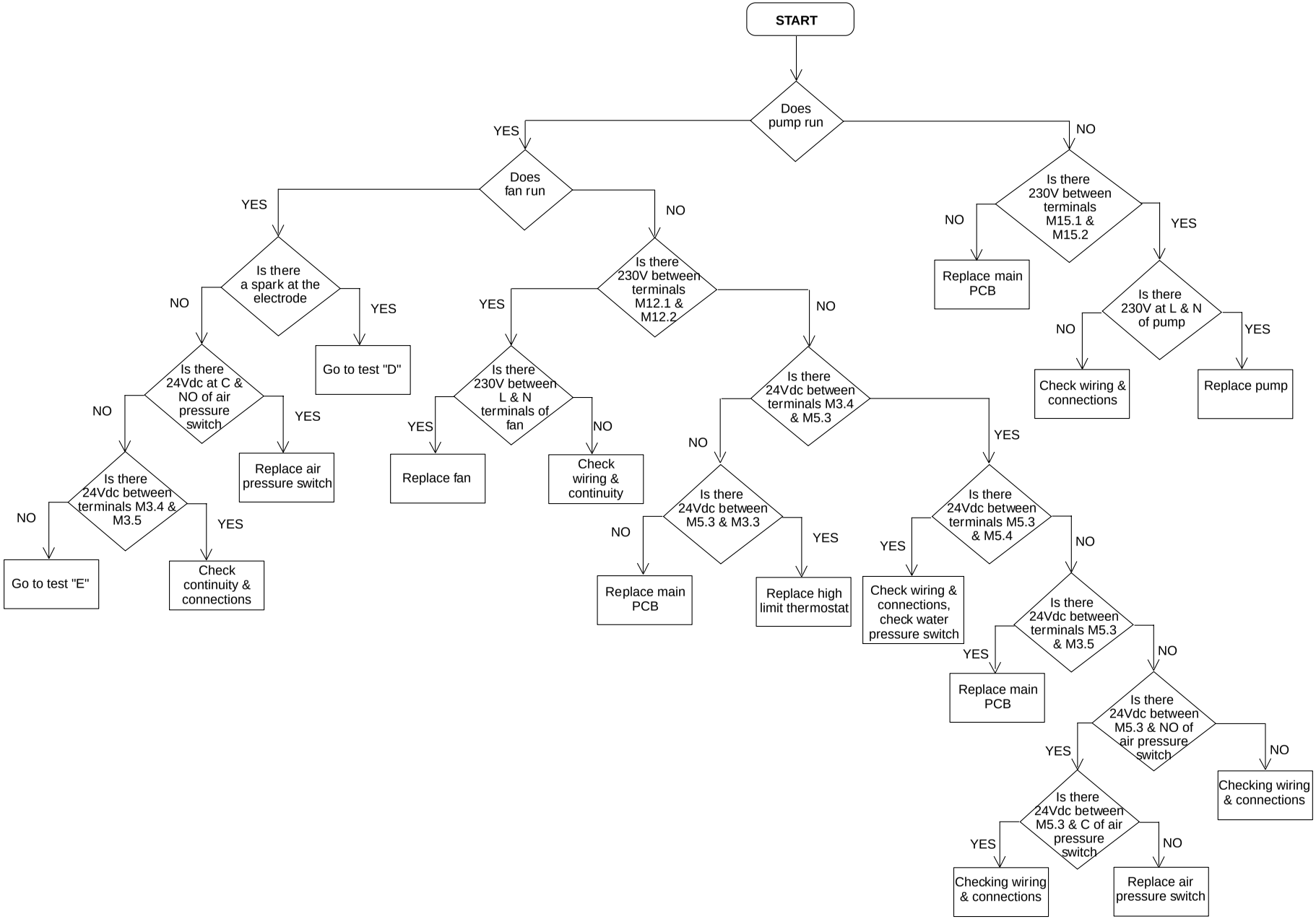

FAULT FINDING TEST ‘C’(Mynute 35e): turn the selector to the “on” position

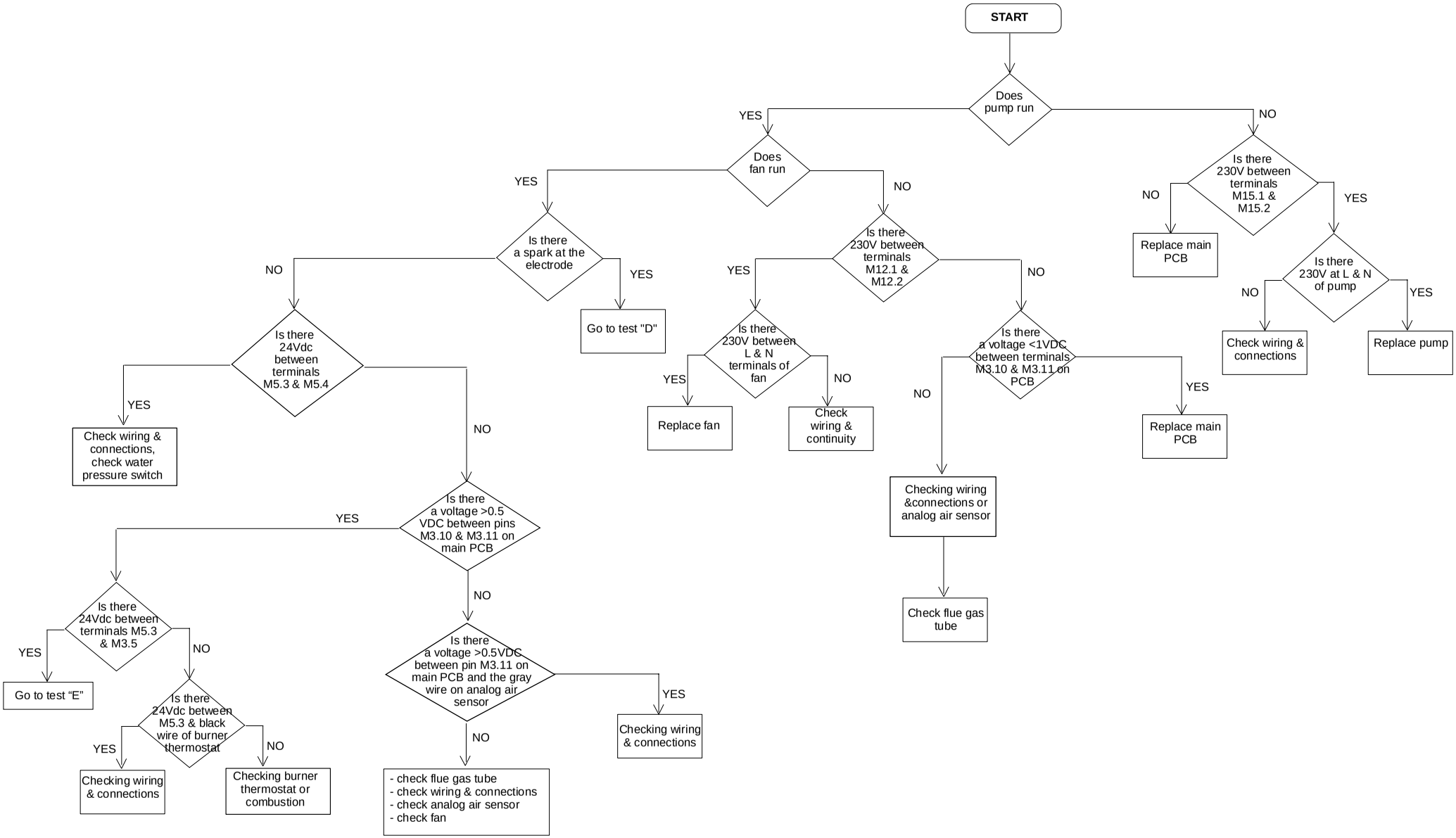

FAULT FINDING TEST ‘D’ (Mynute 28e-35e): turn the selector to the “on” position

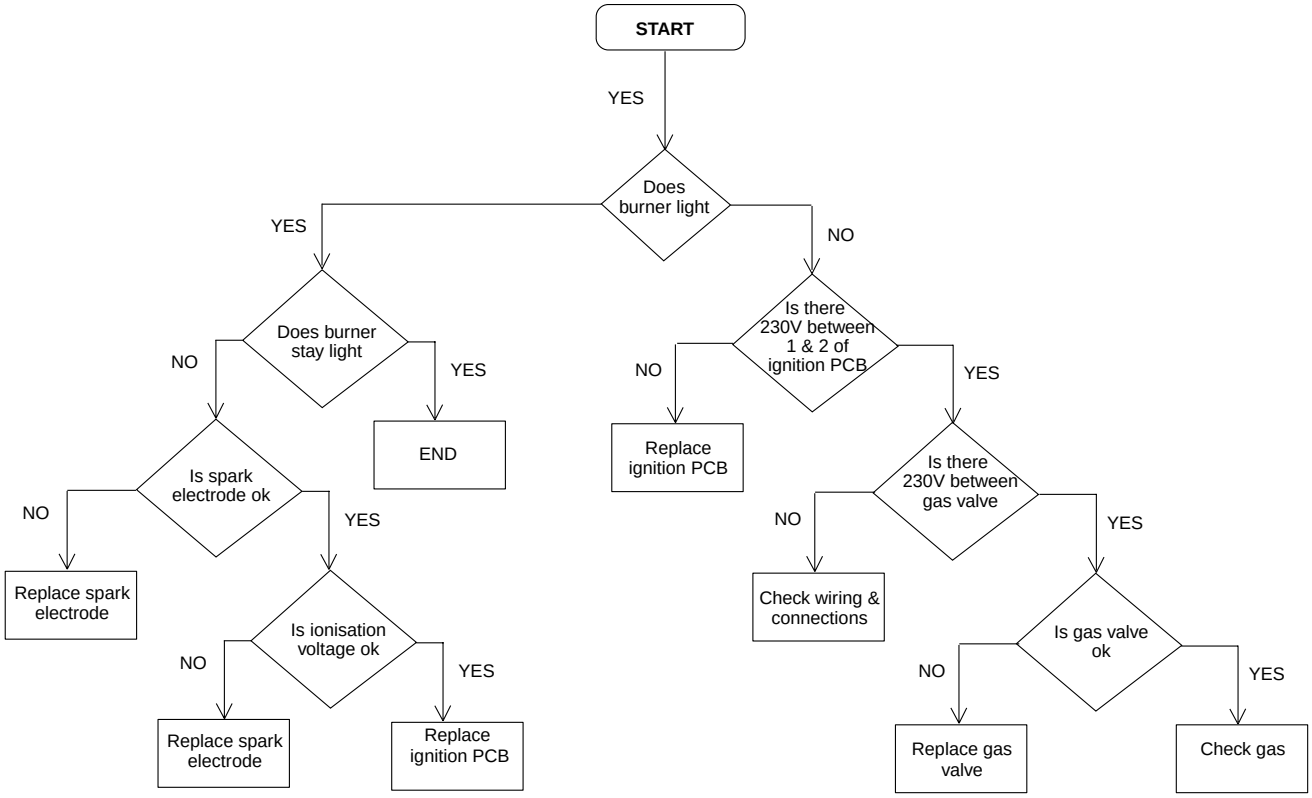

FAULT FINDING TEST ‘E’ (Mynute 28e-35e): turn the selector to the “on” position

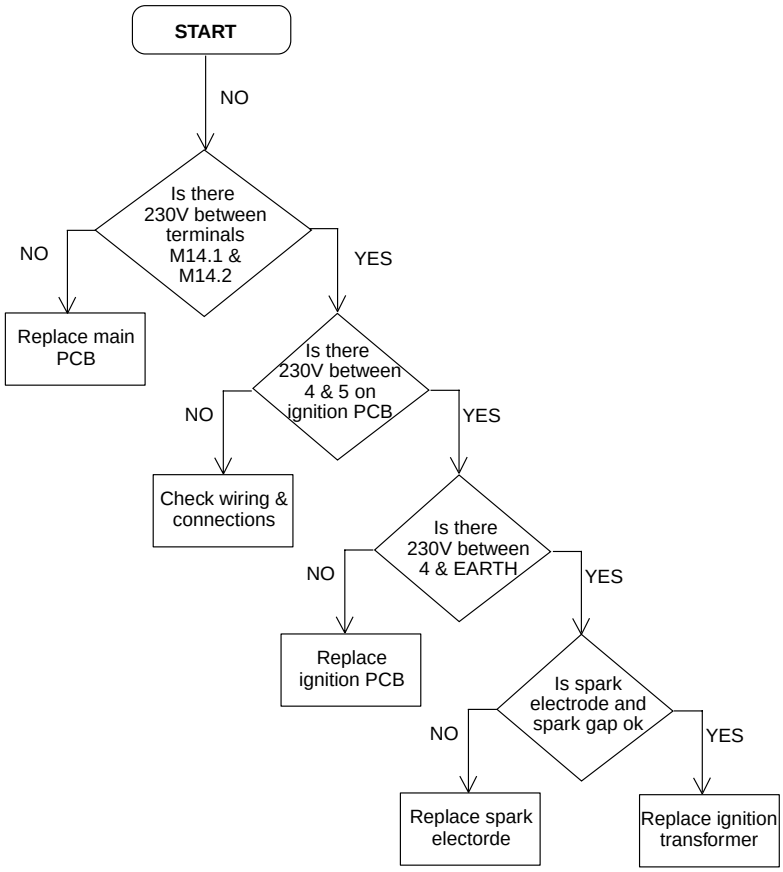

8.1 EXTERNAL WIRING

The appliance comes with a factory fitted link to allow basic operation of the boiler via the mode selector switch. If external controls are to be added to the system, they must be connected to the boiler as shown in the following diagrams. For advice on controls that are not featured in this book, please contact Vokera technical on 0141 945 6810.

8.2 INSTALLATION OF VOKERA TWIN CHANNEL PROGRAMMER

- Isolate the appliance from the electrical supply and remove the casing as described in 4.7.1.
- Remove the blanking plate from the clock aperture.
- Remove the appliance PCB cover.
- Remove the factory fitted link between terminals 3 & 4 of the appliance terminal strip.
- Take the wires supplied with the programmer and connect them as shown in fig. 26.
- Mount the programmer to the clock aperture plate ensuring it's secured in place.
- Connect any external controls as detailed in 8.4 or 8.5.
- Replace the PCB cover and casing once the programmer installation has been completed.

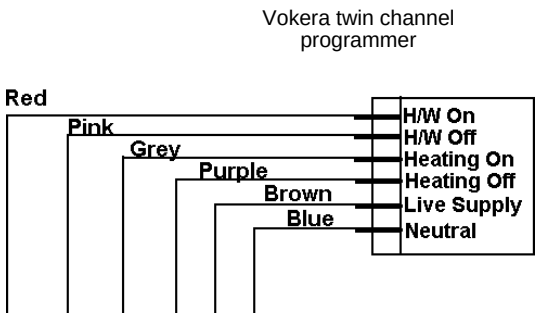

Fig. 26

8.3 INSTALLATION OF VOKERA TIME CLOCK (24 hours & 7 day versions)

- Isolate the appliance from the electrical supply and remove the casing as described in 4.7.1.
- Remove the circular blanking disc from the clock aperture plate.
- Remove the PCB cover from the appliance.
- Connect the wires to the clock as shown in fig. 27.
- Mount the clock to the clock aperture plate using the screws provided.
- Remove the factory fitted link between terminals 3 & 4 on the appliance terminal strip.
- Connect the clock wires to the appliance terminal strip as shown in fig. 27.
- Replace the PCB cover and casing once the clock installation has been completed.

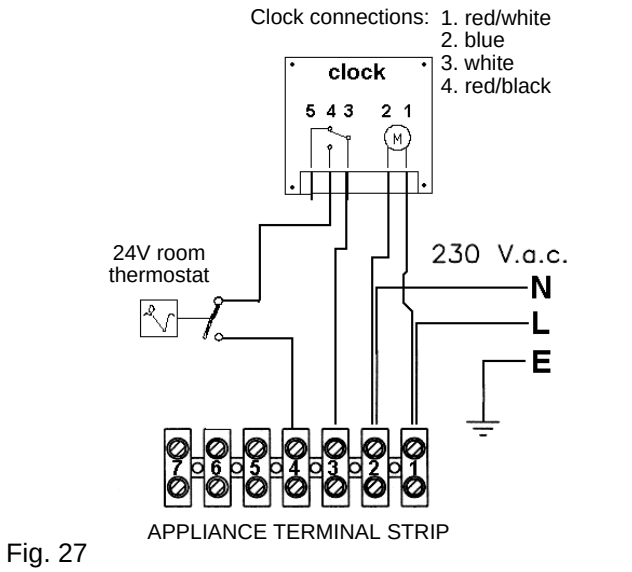

Fig. 27

NOTE

If the connection of a room thermostat is also required, the spare terminals on the appliance terminal strip can be used for this purpose.

If any external time clock is preferred, it must have "voltage free connections". This appliance requires a permanent electrical supply.

NOTE

The appliance and integral programmer/clock must be connected as described in these instructions, to ensure the safe and correct operation of this appliance.

S plan system:external programmer or integral Vokera programmer

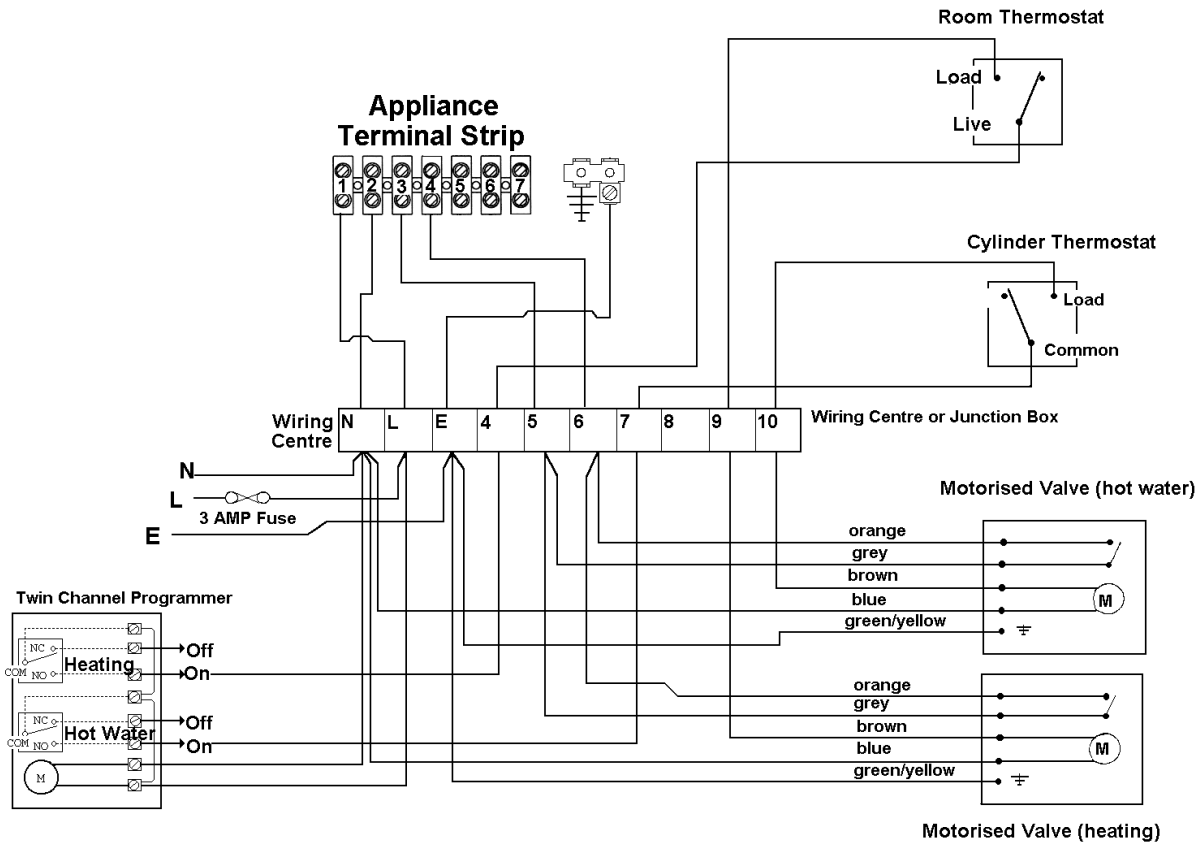

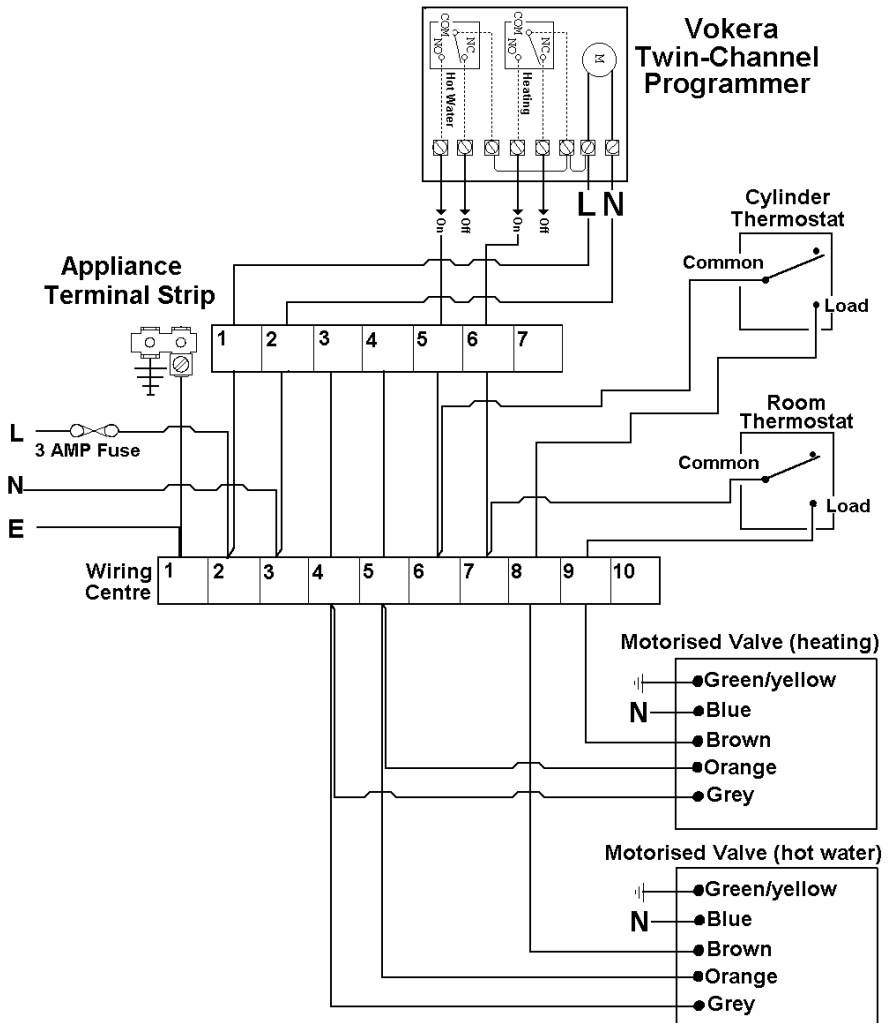

Fig. 28

Y plan system: external programmer or integral Vokera programmer

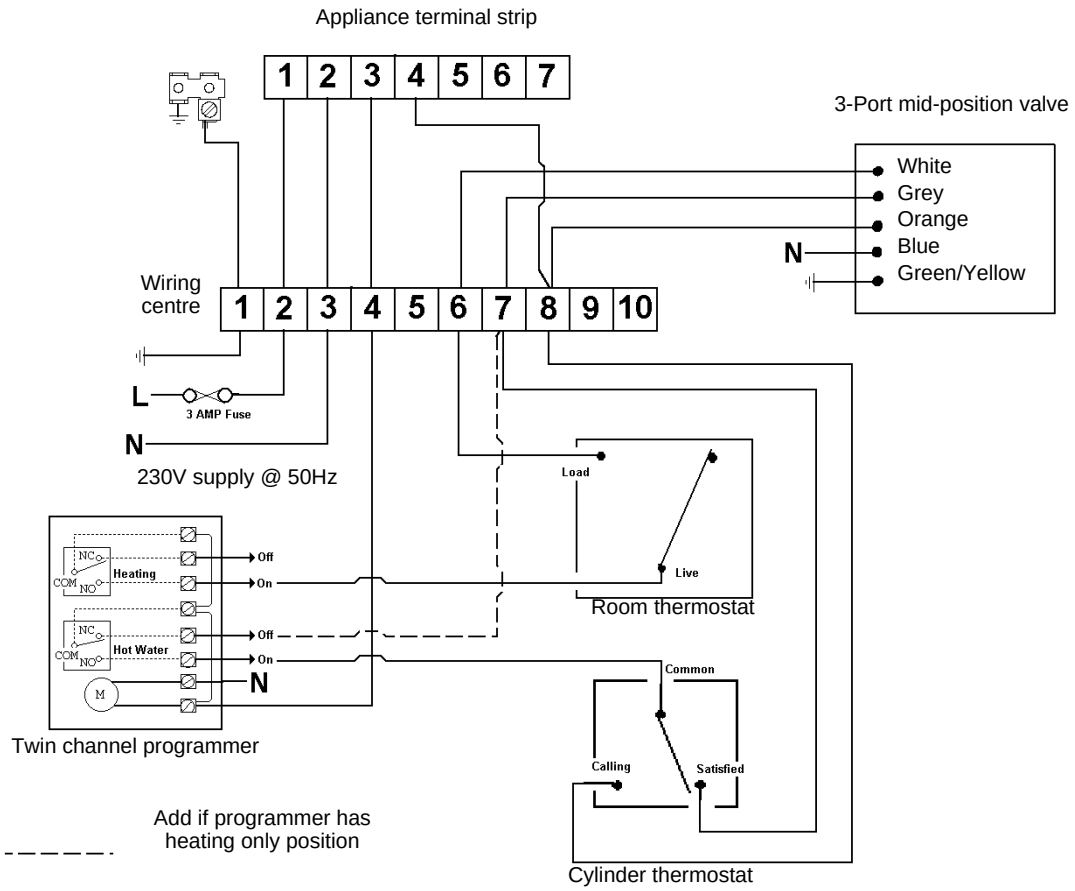

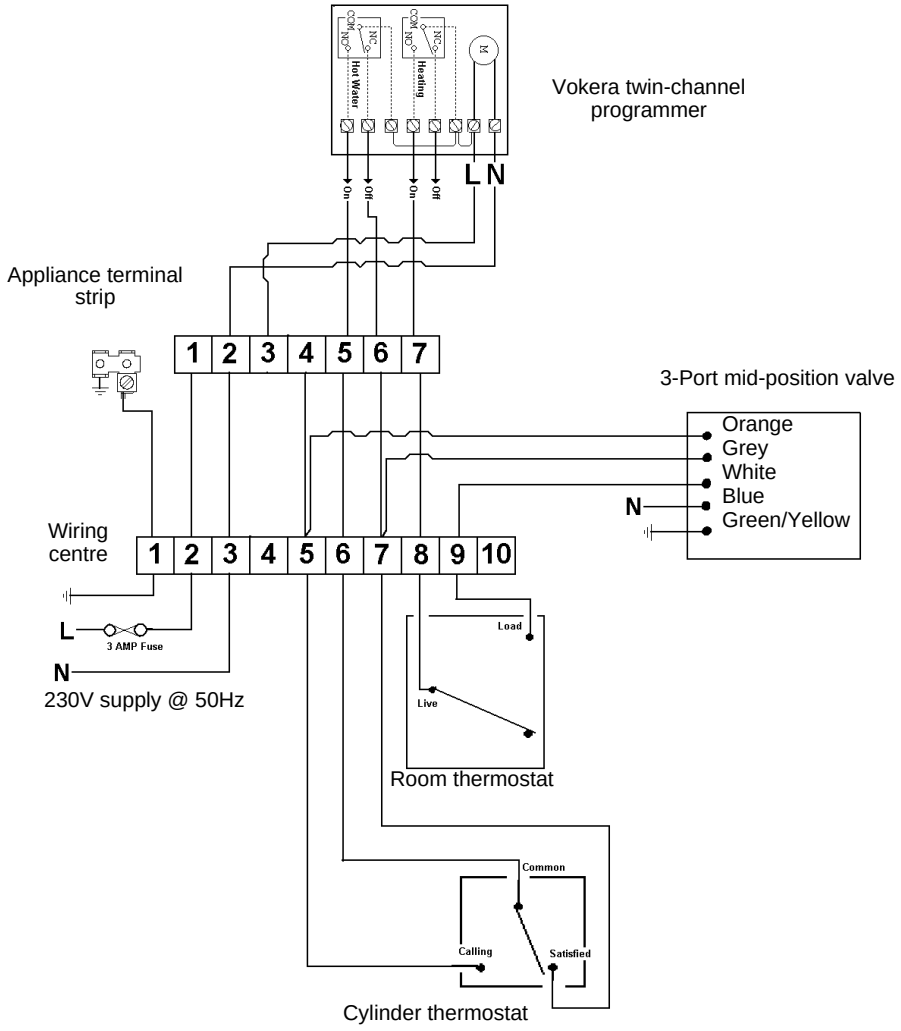

Fig. 29

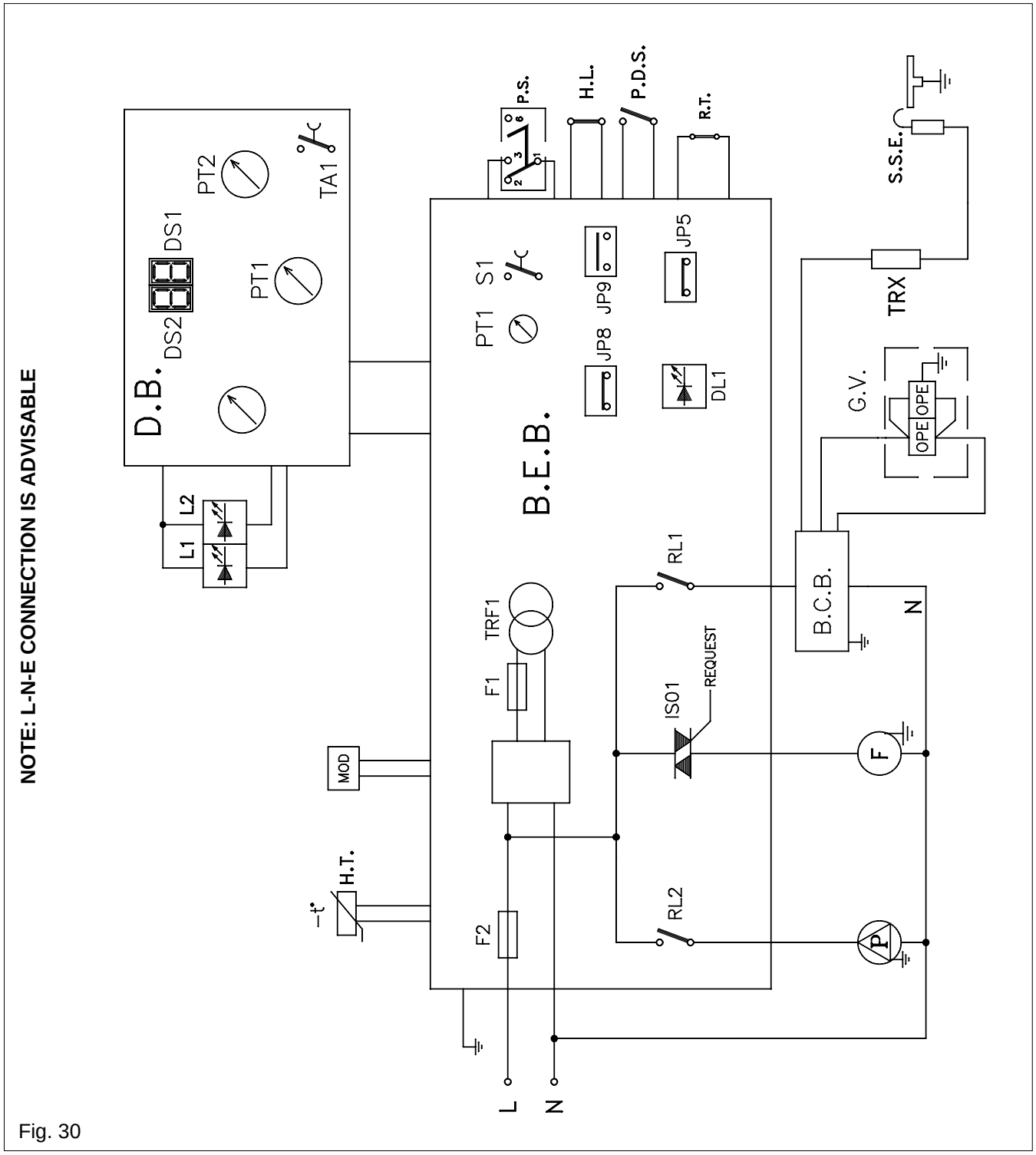

Fig. 30

Key

R.T.	Room thermostat (external controls)	**JP9**	Timer on/off selector
P.S.	Water pressure switch	**PT2**	Central heating temperature control
P.D.S.	Differential pressure switch	**PT1**	Selection of 0-reset/ winter-summer
H.L.	High limit thermostat	**DS1-DS2**	Temperature/alarm display
S.R.	Heat thermistor	**TA1**	Combustion test
MOD	Modulator	**F1**	Fuse 100mA F (on 24V circuit)
F	Fan	**F2**	Fuse 2 A F (on 230V circuit)
P	Pump	**RL1**	Ignition relay
S.S.E	Sense/ignition electrode	**RL2**	Pump relay
OPE	Gas valve solenoids	**IS01**	Fan triac
B.C.B.	Burner control board	**L1**	Led OK (green)
B.E.B.	Boiler control board	**L2**	Led alarm (blink red)
D.B.	Secondary board	**TRF1**	Transformer
JP8	Natural gas or L.P.G. selector	**G.V.**	Gas valve

FUNCTIONAL DIAGRAM 35e

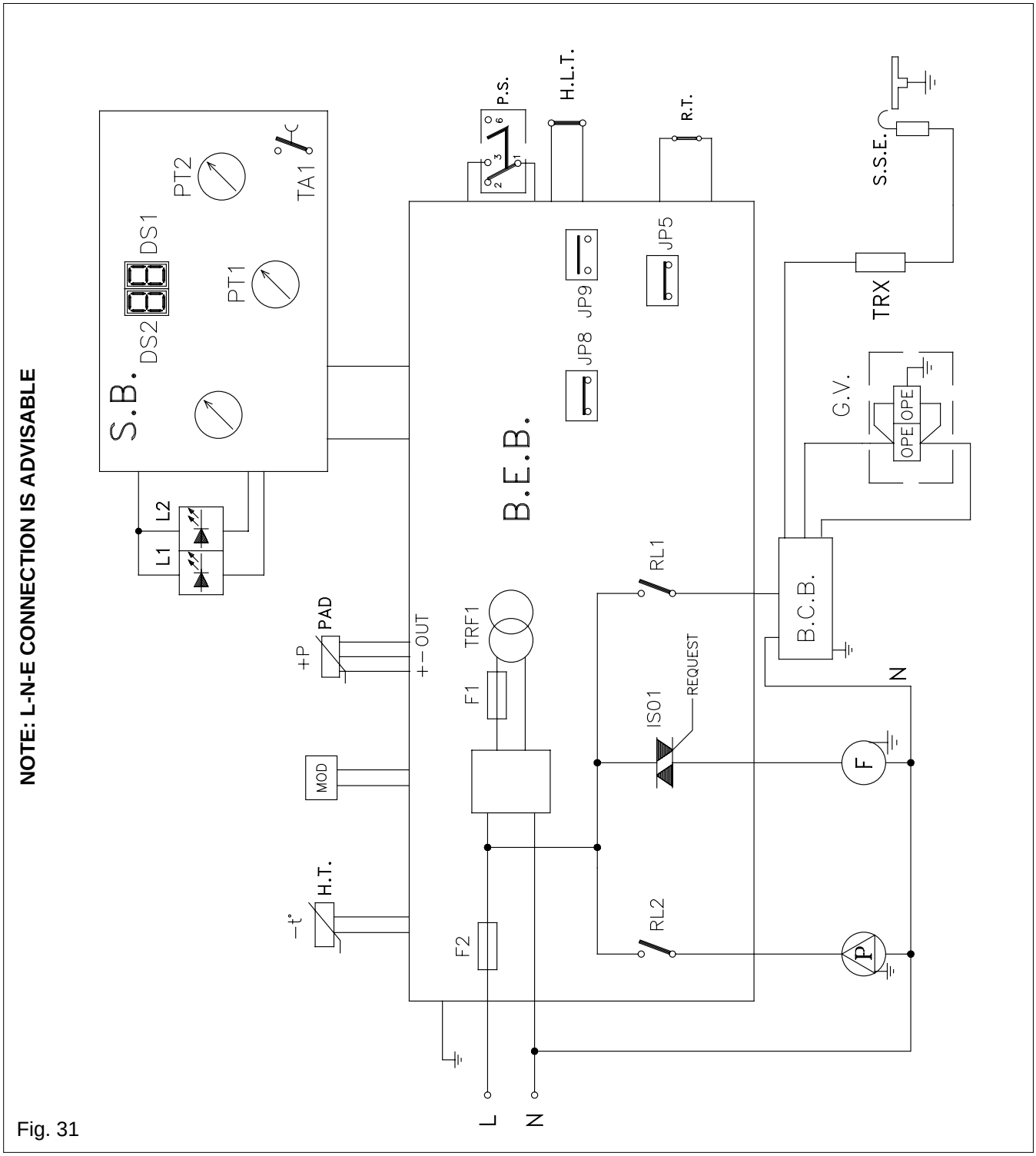

Fig. 31

Key

R.T. Room thermostat (external controls)
P.S. Water pressure switch
D.A.P.S. Differential analogue pressure switch
H.L. Hight limit thermostat
H.T. Heat thermistor
MOD Modulator
F Fan
P Pump
S.S.E. Sense / ignition electrode
OPE Gas valve solenoids
B.C.B. Burner control board
B.E.B. Boiler control board
S.B. Secondary board
JP8 Natural gas or L.P.G. selector
JP9 Timer on- off selector
PT2 Central heating temperature control
PT1(S.B.) Selection of 0-reset / winter - summer
DS1-DS2 Temperature / allarm display
TA1 Combustion test
F1 Fuse 100 mA F (on 24V circuit)
F2 Fuse 2 A F (on 230 V circuit)
RL1 Ignition relay
RL2 Pump relay
IS01 Fan triac
L1 Led OK (green)
L2 Led alarm (blink red)
TRF1 Transformer
G.V. Gas valve
B.T. Burner thermostat

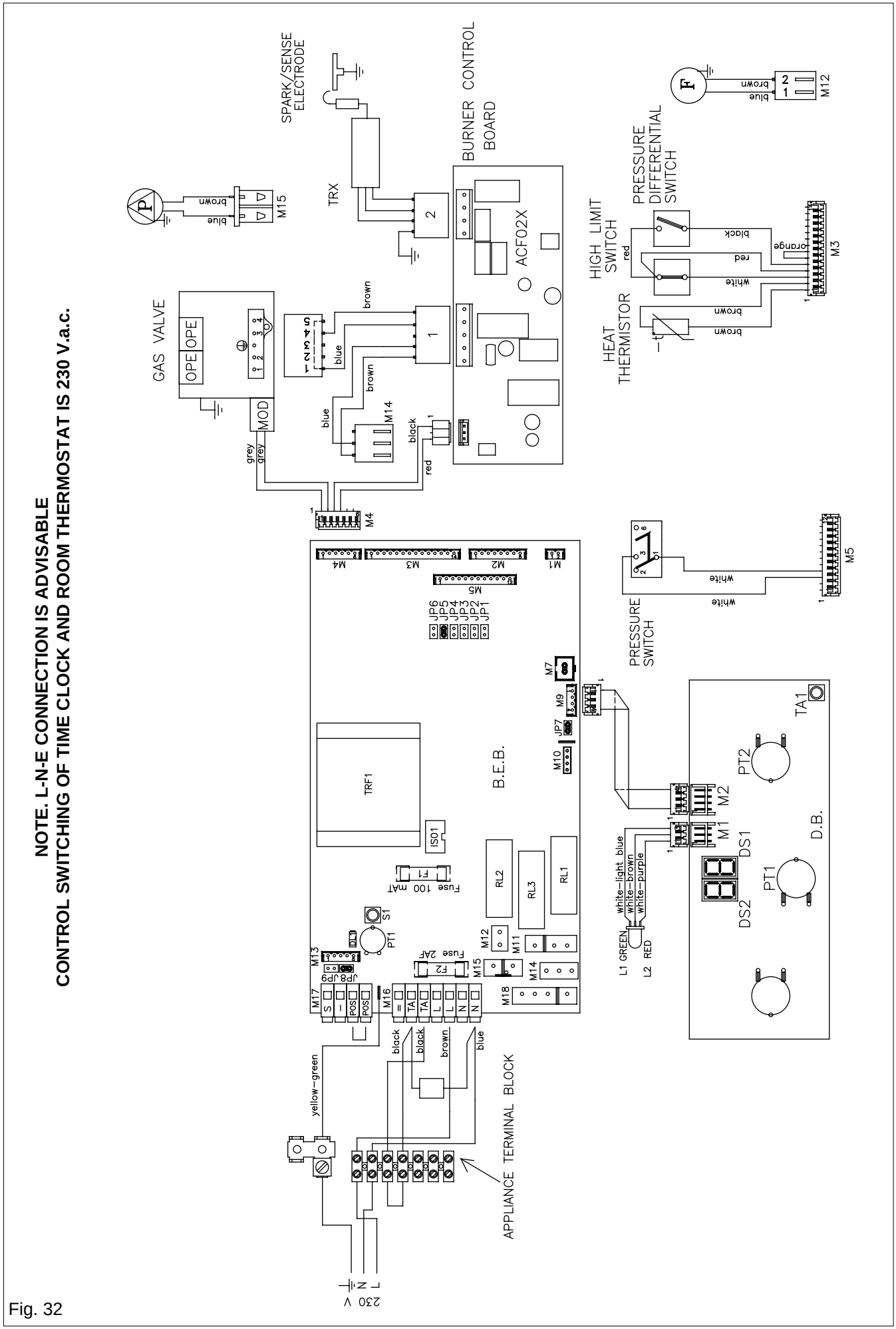
NOTE. L-N-E CONNECTION IS ADVISABLE
CONTROL SWITCHING OF TIME CLOCK AND ROOM THERMOSTAT IS 230 V.a.c.
SPARK/SENSE ELECTRODE
TRX
BURNER CONTROL BOARD
ACF02X
GAS VALVE
OPE
MOD
M15
M14
M4
M12
M3
M5
HIGH LIMIT SWITCH
PRESSURE DIFFERENTIAL SWITCH
HEAT THERMISTOR
PRESSURE SWITCH
B.E.B.
TRF1
ISO1
Fuse 100 mAT
Fuse 2AT
RL1
RL2
RL3
PT1
S1
M13
JP8 JP9
M17
M16
M18
M11
M10
M9
M7
JP7
JP6 JP5 JP4 JP3 JP2 JP1
M1
M2
M3
M4
M5
D.B.
TA1
PT2
DS1
DS2
L1 GREEN
L2 RED
white-light blue
white-brown
white-purple
yellow-green
APPLIANCE TERMINAL BLOCK
230 V
L N

Fig. 32

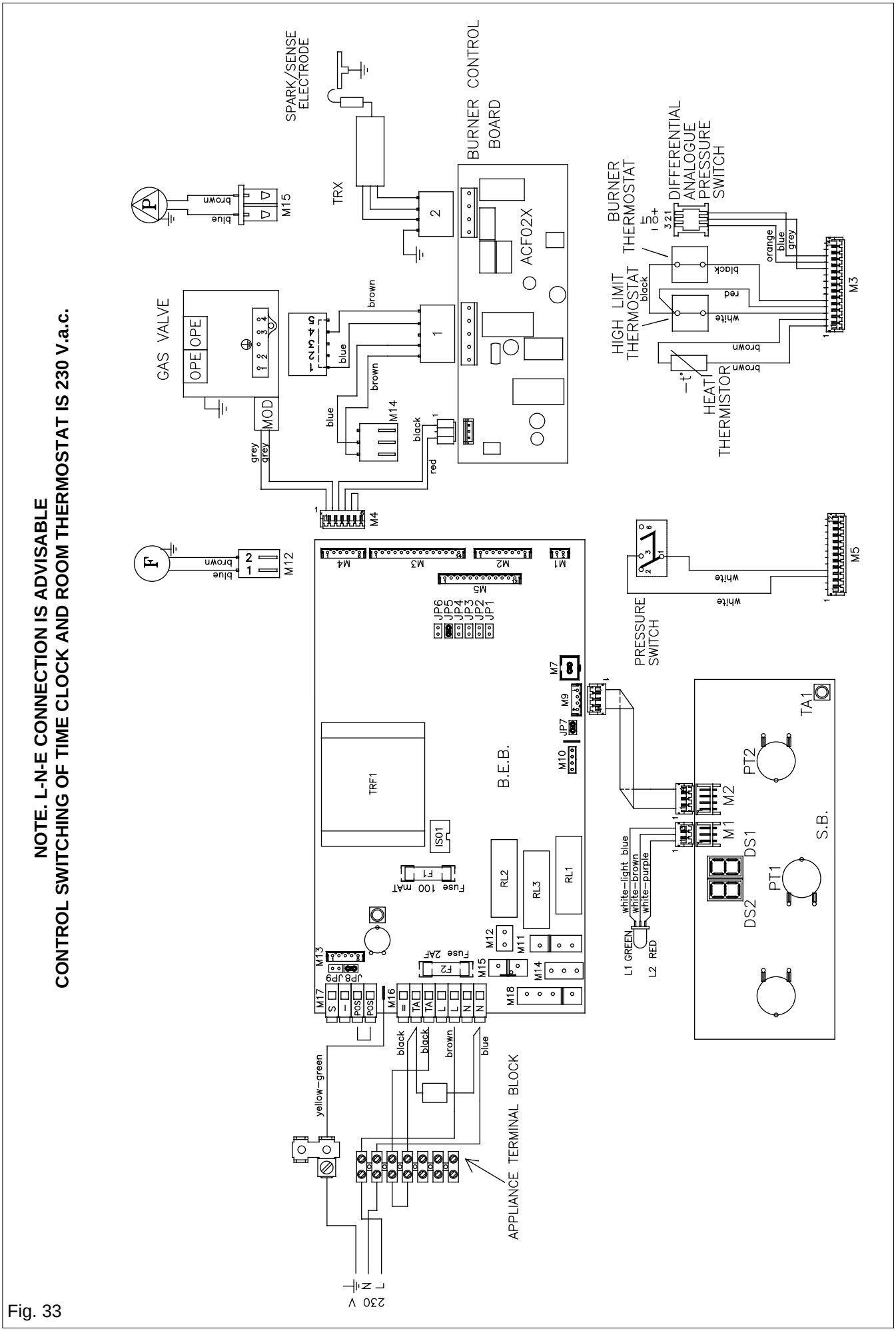
NOTE. L-N-E CONNECTION IS ADVISABLE
CONTROL SWITCHING OF TIME CLOCK AND ROOM THERMOSTAT IS 230 V.a.c.
SPARK/SENSE ELECTRODE
TRX
BURNER CONTROL BOARD
ACF02X
BURNER THERMOSTAT
DIFFERENTIAL ANALOGUE PRESSURE SWITCH
HIGH LIMIT THERMOSTAT
HEAT THERMISTOR
GAS VALVE
OPE
MOD
M15
M14
M4
M3
M12
M5
PRESSURE SWITCH
B.E.B.
TRF1
ISO1
Fuse 100 mAT
Fuse 2AT
RL1
RL2
RL3
JP1
JP2
JP3
JP4
JP5
JP6
JP7
JP8
JP9
M1
M2
M7
M9
M10
M11
M13
M16
M17
M18
S.B.
TA1
PT1
PT2
DS1
DS2
L1 GREEN
L2 RED
white-light blue
white-brown
white-purple
APPLIANCE TERMINAL BLOCK
230 V

Fig. 33

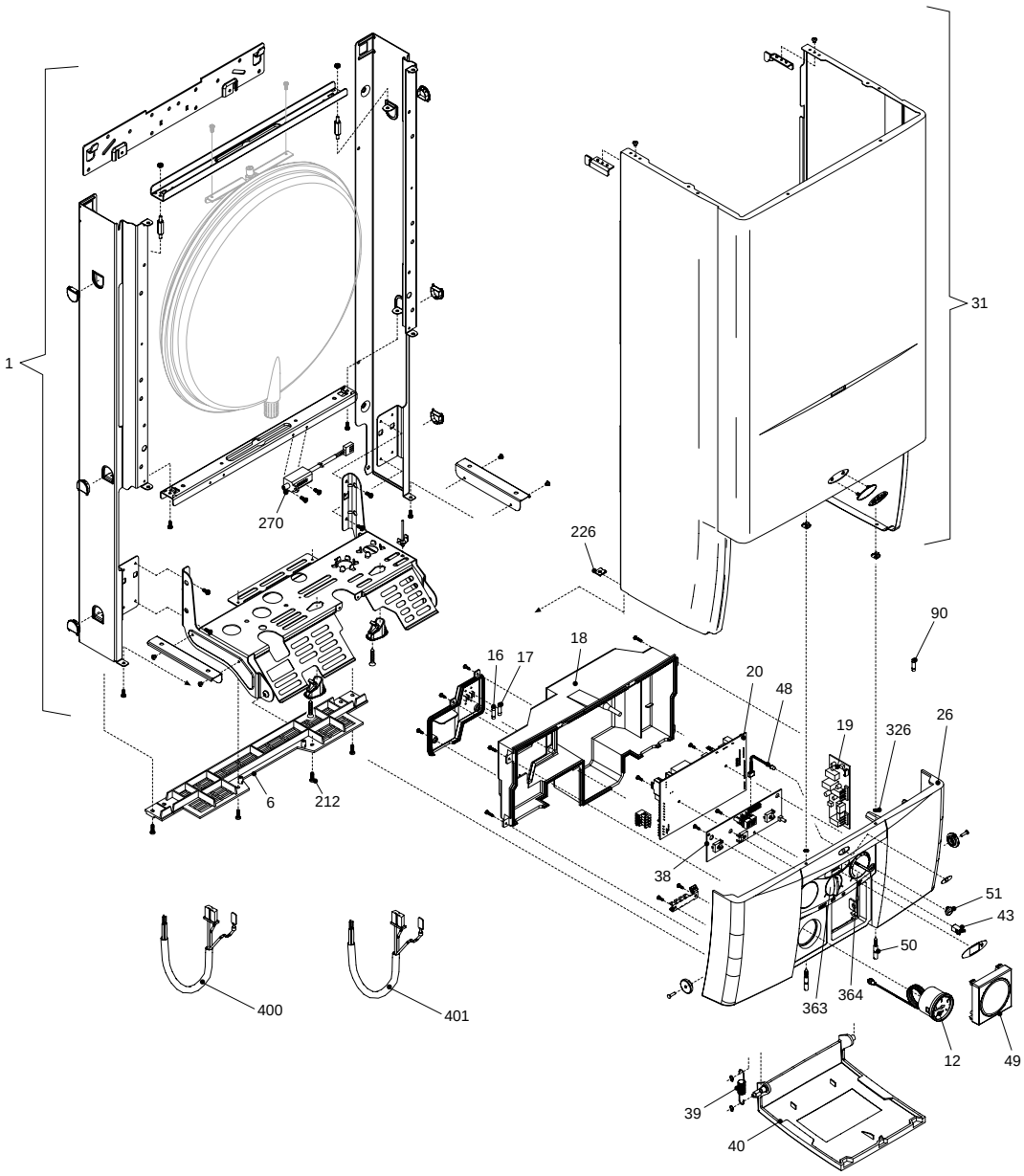

POS.	DESCRIPTION	28 E	35 E
1	Frame	R01005134	R01005212
6	Guard	R1913	R1913
12	Quick primer pressure gauge	R1857	R1857
16	2A fuse	R8968	R8968
17	100mA fuse	R1947	R1947
18	Printed Circuit Board cover	R10021849	R10021849
19	Ignition module	R10021848	R10021848
20	Printed Circuit Board	R10024731	R10024731
26	Instrumental panel	R10023051	R10024756
31	Case	R1922	R2062
38	Control printed circuit board	R10020477	R10020477
39	Spring	R1862	R1862
40	Door panel	R10022860	R10024757
43	Push-push cover	R1864	R1864
48	Green-red led	R1858	R1858
49	Plastic bezel	R8654	R8654
50	Pin	R1867	R1867
51	Hole cover	R1861	R1861
90	3 A fuse	R3478	R3478
212	Self tapping screw	R5080	R5080
226	Edge clip	R5128	R5128
326	O-ring	R1869	R1869
362	Transformer	R10022659	R10022659
363	Selector knob kit	R01005072	R01005072
364	Control knob kit	R01005073	R01005073
400	Wiring harness	R10021117	R10021117
401	Wiring harness	R10023066	R10023066

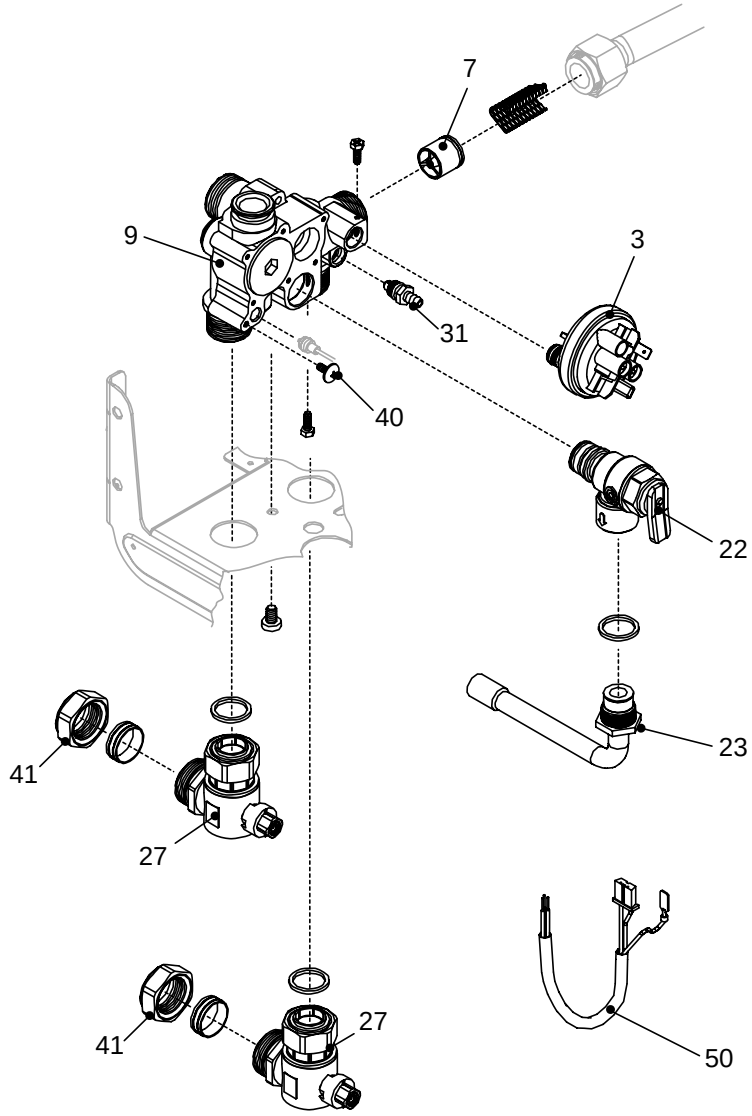

POS.	DESCRIPTION	28 E	35 E
3	Pressure switch	R2044	R2044
7	Heating by-pass valve	R1552	R1552
9	Heating distributor manifold	R10021821	R10021821
22	Safety valve	R1806	R1806
23	Pipe	R10023065	R10023065
27	Heating cock	R1789	R1789
31	Venting plugs kit	R01005137	R01005137
40	Screw	R6903	R6903
41	Ogive	R1824	R1824
50	Wiring harness	R10023067	R10023067

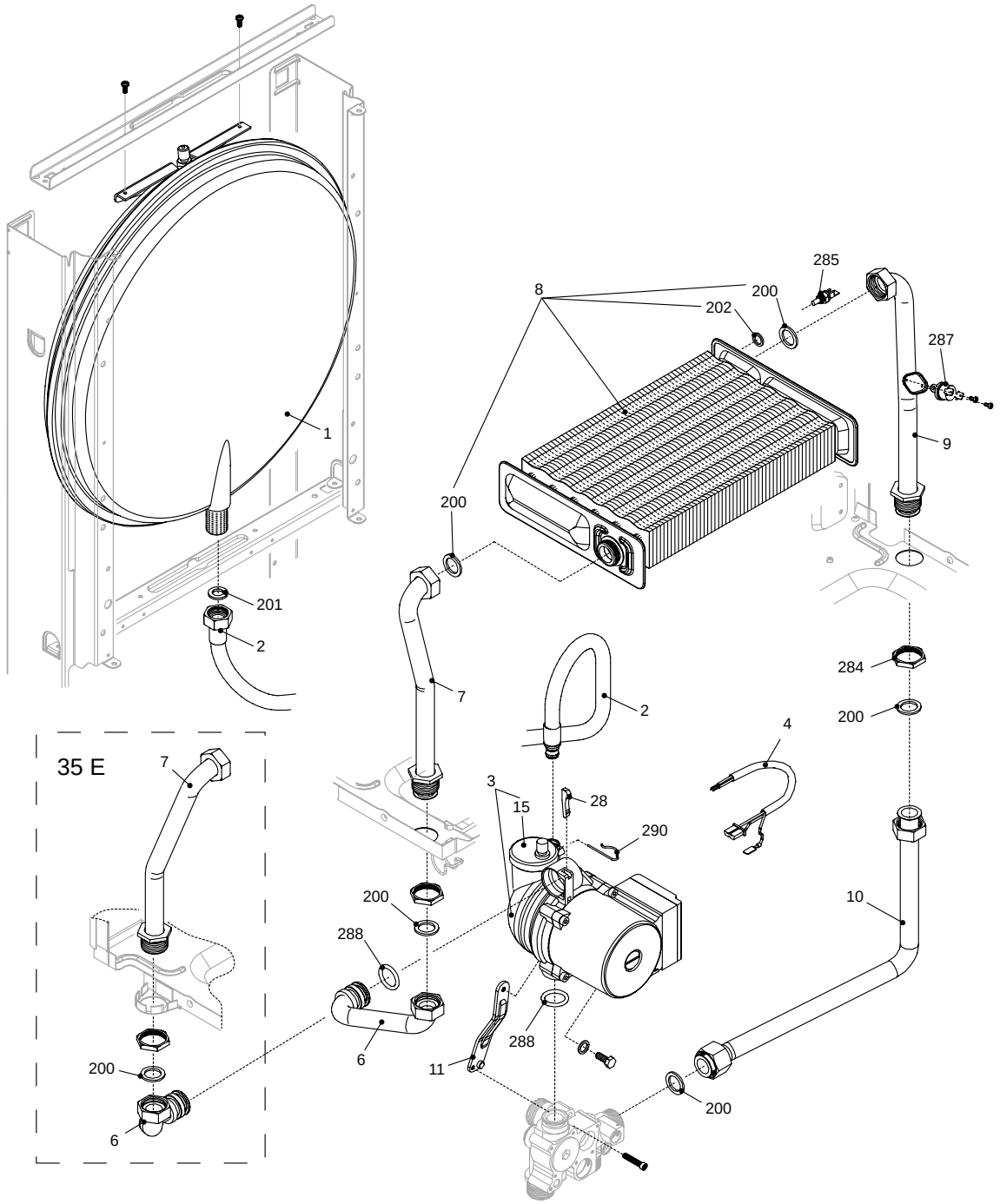

POS.	DESCRIPTION	28 E	35 E
1	Expansion vessel	R2573	R2573
2	Flexible pipe	R2164	R2164
3	Up 15-60 pump	R10020438	R10020438
4	Wiring harness	R1845	R1845
6	Pump pipe	R1917	R10023209
7	Pipe	R1847	R2051
8	Heat exchanger	R2378	R10024580
9	Pipe	R10021041	R10020519
10	Pipe	R10022859	R10024754
11	Bracket	R1642	R1642
15	Automatic air vent bottle	R0439	R0439
28	Pump lock key	R9263	R9263
200	Washer	R5023	R5023
201	Washer	R5026	R5026
202	Washer	R5041	R5041
285	NTC sensor	R8484	R8484
287	Hight limit thermostat	R2258	R2258
288	O ring	R6898	R6898
290	Clip	R2165	R2165

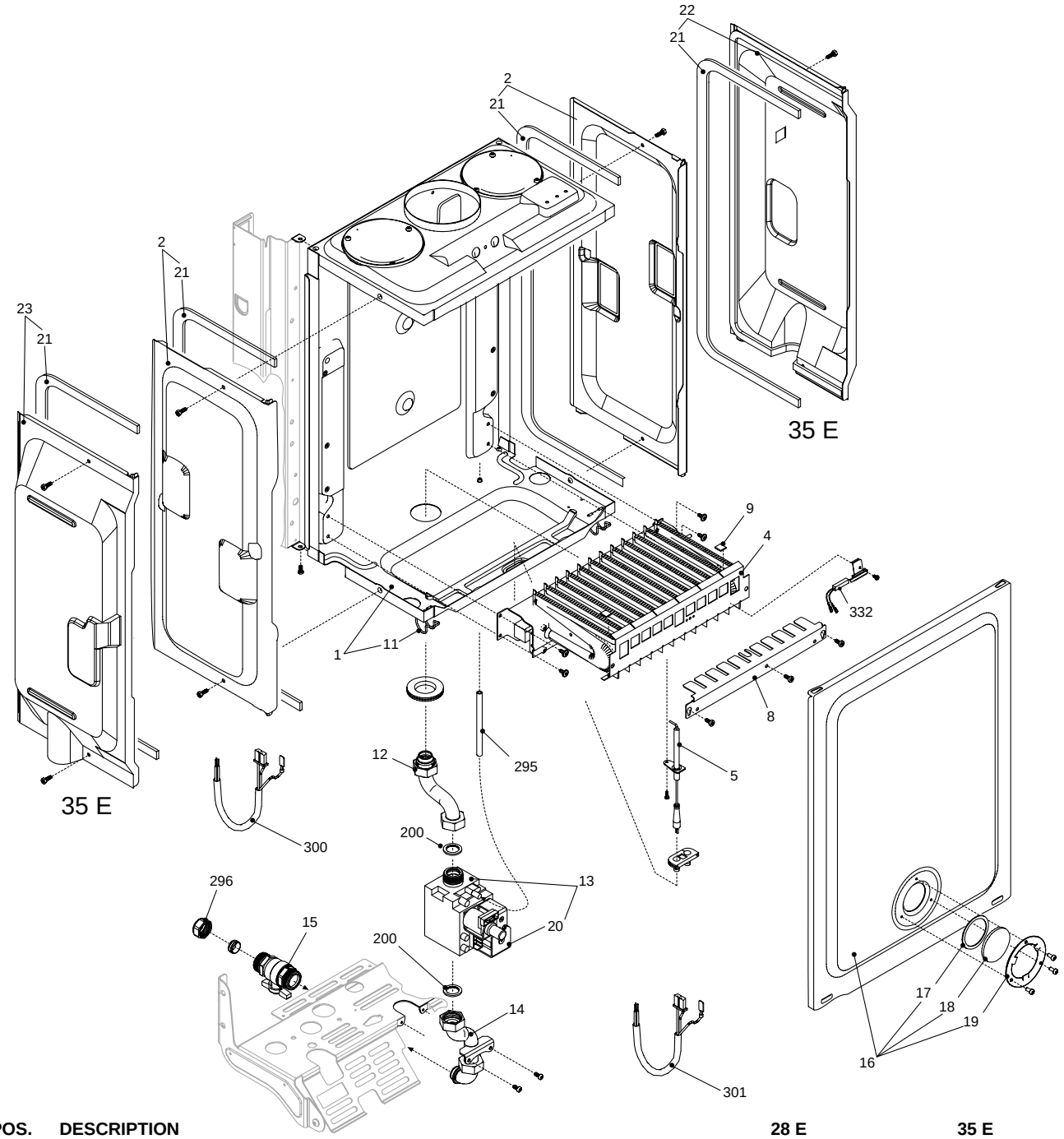

POS.	DESCRIPTION	28 E	35 E
1	Air box bottom	R2073	R10024792
2	Air box side	R1549	-
4	NG Burner	R5317	R10024752
4	LPG burner	R5319	R10024753
5	Spark electrode	R10022027	R10022027
8	Flame propagation baffle	R2069	-
9	Burner plate	R5172	-
11	Air box clip	R0442	R0442
12	Gas pipe	R1839	R1839
13	Gas valve	R10021021	R10021021
14	Gas pipe	R1840	R1840
15	Gas cock	R1787	R1787
16	Cover assembly	R10020217	R10020430
17	Washer	R5072	R5072
18	Pilot sight glass	R3139	R3139
19	Fixing glass flange	R4007	R4007
21	Washer	R5905	R5905
22	Air box side	-	R2059
23	Air box side	-	R2060
200	Washer	R5023	R5023
295	Silicone Tube	R1457	-
296	Brass nut	R1823	R1823
300	Wiring harness	R10021947	R10021947
301	Wiring harness	R10022112	R10024466

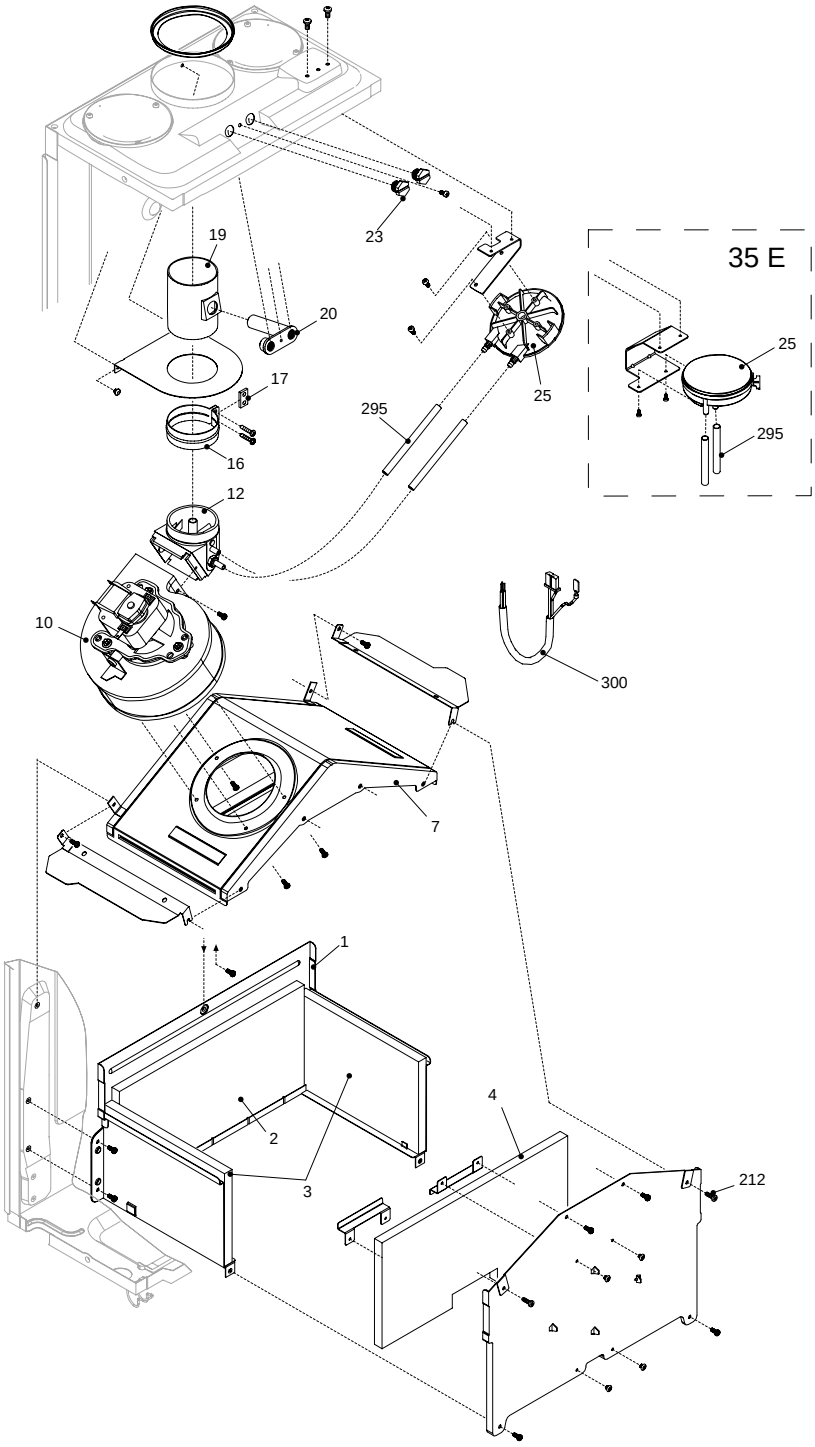

POS.	DESCRIPTION	28 E	35 E
1	Combustion chamber assembly	R6028	R10024751
2	Rear panel	R5316	R10020518
3	Lateral panel	R5271	R5271
4	Front panel	R5315	R10020517
7	Hood assembly	R5907	R1968
10	Fan	R6492	R10024577
12	Fan to flue connector	R10023183	R10023183
16	Clamp for 60 diam. tube	R5916	R5916
17	Washer clamp	R5917	R5917
19	Fan flue connection	R8083	R8083
20	Block with combustion analysis	R8085	R8085
23	Brass cap	R8086	R8086
25	Pressure differential switch kit	R01005272	R2677
212	Selt tapping screw	R5080	R5080
295	Silicone tube	R1457	R1457
300	Wiring harness	R1870	R1870
300	Wiring harness	-	R10020529

SECTION 10 L.P.G. INSTRUCTIONS

For details of converting boilers to LPG please refer to the instructions supplied with the relevant conversion kit.

10.1 TECHNICAL DATA

Mynute	28e	35e
Inlet pressure (LPG)	37 mbar	37 mbar
Burner pressure maximum	36 mbar	36 mbar
Burner pressure minimum	5,5 mbar	2,8 mbar
Maximum gas rate	2,41 kg/h	2,94 kg/h
Minimum gas rate	0,97 kg/h	0,77 kg/h
Injector size	14 x 0,77mm	16 x 0,8 mm

10.2 RELATED DOCUMENTS

BS 6798		**INSTALLATION OF BOILERS OF RATED INPUT NOT EXCEEDING 60 kW**
BS 5449	**PART 1**	**FORCED CIRCULATION HOT WATER SYSTEMS**
BS 5546		**INSTALLATION OF GAS HOT WATER SUPPLIES FOR DOMESTIC PURPOSES**
BS 5440	**PART 1**	**FLUES**
BS 5482	**PART 1**	**DOMESTIC BUTANE & PROPANE GAS BURNERS IN PERMAMENT DWELLINGS**

10.3 GAS SUPPLY

The gas supply must be connected to the appliance by a competent LPG installer and must be of sufficient size to supply the appliance at its maximum output.

An existing supply must be checked to ensure that it is of adequate size to deal with the maximum rated input of this and any other appliances that it serves.

10.4 GAS SUPPLY INSTALLATION

The entire installation, including the meter, must be purged and checked for gas soundness.

10.5 CHECKING AND ADJUSTING BURNER PRESSURE (see fig. 17)

Although the burner pressure is factory set, it is necessary to check it during servicing or if the gas valve has been removed. Isolate the appliance from the electrical supply and attach a suitable manometer to the gas valve outlet test nipple. Remove the compensator tube (28e only).

10.5.1 SETTING THE MAXIMUM BURNER PRESSURE

Light the boiler as described in 5.6 and compare the reading on the manometer with the value described in 2.2. If adjustement is required, remove the protective cap from the gas valve modulating coil assembly and turn the outer (10mm) nut clockwise to increase, or counter-clockwise to decrease the burner pressure.

NOTE

You should ensure that all radiators or heat emitters are fully open during the above procedure. This will ensure that the output of the boiler (burner pressure) is not compromised due to a high flow temperature.

10.5.2 SETTING THE MINIMUM BURNER PRESSURE

Once the maximum burner pressure has been checked and/or adjusted, remove one of the grey wires from the modulating coil. Compare the reading on the manometer with the value described in 2.2. If adjustement is required, turn the inner (red) cross-head screw clockwise to increase, or counter-clockwise to decrease the burner pressure, whilst ensuring that the outer (10mm) nut does not move. When checking and/ or adjustement has been completed, isolate the appliance from the electrical supply, replace the protective cap, refit the compensator tube, refit the grey wire to the modulating coil, remove the manometer, and tighten the outlet test nipple.

IMPORTANT, A GAS SOUNDNESS CHECK MUST BE CARRIED OUT.

Cod. 10024759 - 49/03 - Ed. 2

Vokèra

energizing home heating

Vokèra Ltd.
4th Floor, Catherine House, Boundary Way, Hemel Hempstead, Herts, HP2 7RP

Email: enquiries@vokera.co.uk Web: www.vokera.co.uk
Sales, Technical Advice, General Enquiries - Tel: 0870 333 0520 Fax: 01442 281403
After Sales Service - Tel: 0870 333 0220

Vokèra Ireland
West Court, Callan, Co Kilkenny
Tel: 05677 55057 Fax: 05677 55060

Vokèra Ltd. reserve the right to change the specifications without prior notice. Consumers' statutory rights are not affected.

A Riello Group Company

benchmark™
COLLECTIVE MARK

"Vokèra"
supports Benchmark