spares & parts online
IBASIS.co.uk©

Vokèra
heating for life

Mynute HE

High efficiency system boiler

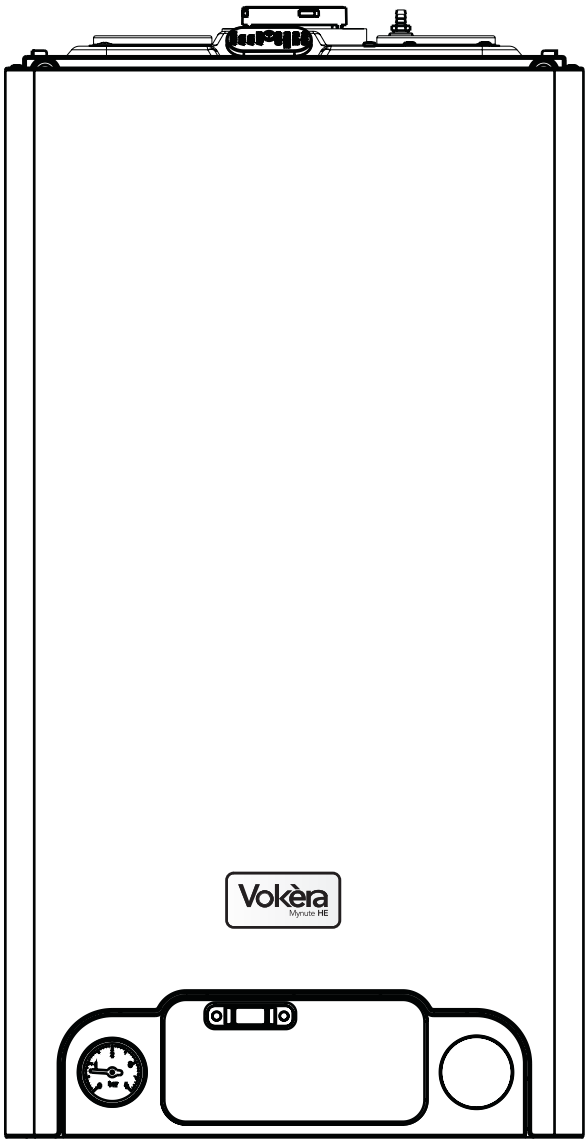

Installation
& Servicing
Instructions

CE

THESE INSTRUCTIONS
TO BE RETAINED
BY USER

benchmark
COLLECTIVE MARK
THE MARK OF QUALITY FOR THE INSTALLATION, COMMISSIONING AND SERVICING OF DOMESTIC HEATING AND HOT WATER SYSTEMS

Vokèra is a licensed member of the Benchmark scheme which aims to improve the standards of installation and commissioning of domestic hot water systems in the UK.

Contents

Design principles & operating sequence		Page
1.1	Principle components	3
1.2	Mode of operation (at rest)	3
1.3	Mode of operation	3
1.4	Safety devices	3

Technical data		Page
2.1	Central heating	4
2.2	Gas pressures	4
2.3	Expansion vessel	4
2.4	Dimensions	4
2.5	Clearances	4
2.6	Connections	4
2.7	Electrical	4
2.8	Flue details (concentric)	4
2.8A	Flue details (twin pipes)	4
2.8B	Flue details (80/125)	4
2.9	Efficiency	4
2.10	Emissions	4
2.11	Pump duty	5

General requirements (UK)		Page
3.1	Related documents	6
3.2	Location of appliance	6
3.3	Gas supply	6
3.4	Flue system	6
3.5	Air supply	6
3.6	Water circulation	6
3.7	Electrical supply	7
3.8	Mounting on a combustible surface	7
3.9	Timber framed buildings	7
3.10	Inhibitors	7

General requirements (EIRE)		Page
3A.1	Related documents	8
3A.2	Location of appliance	8
3A.3	Gas supply	8
3A.4	Flue system	8
3A.5	Air supply	8
3A.6	Water circulation	8
3A.7	Electrical supply	9
3A.8	Mounting on a combustible surface	9
3A.9	Timber framed buildings	9
3A.10	Inhibitors	9
3A.11	Declaration of conformity	9

Installation		Page
4.1	Delivery	10
4.2	Contents	10
4.3	Unpacking	10
4.4	Preparation for mounting the appliance	10
4.5	Fitting the flue	10
4.6	Connecting the gas & water	14
4.7	Electrical connections	14

Commissioning		Page
5.1	Gas supply installation	16
5.2	The heating system	16
5.3	Initial filling of the system	16
5.4	Initial flushing of the system	16
5.5	Pre-operation checks	16
5.6	Initial lighting	16
5.7	Checking gas pressure & combustion analysis	16
5.8	Final flushing of the heating system	17
5.9	Setting the boiler operating temperature	17
5.10	Setting the system design pressure	17
5.11	Regulating the central heating system	17
5.12	Final checks	17
5.13	Instructing the user	17

Servicing		Page
6.1	General	18
6.2	Routine annual servicing	18
6.3	Replacement of components	18
6.4	Component removal procedure	18
6.5	Pump assembly	18
6.6	Safety valve	18
6.7	Lower automatic air release valves	19
6.8	Water pressure switch	19
6.9	Primary thermistor	19
6.10	Return thermistor	19
6.11	Printed circuit board	19
6.12	Gas valve	19
6.13	Electrodes and condense sensor	20
6.14	Flue fan & mixer	20
6.15	Burner	20
6.16	Main heat exchanger	20
6.17	Automatic by-pass	21
6.18	Expansion vessel	21
6.19	Condense trap removal	21
6.20	Flue collector removal	22

Checks, adjustments and fault finding		Page
7.1	Checking appliance operation	22
7.2	Appliance modes of operation	22
7.3	Appliance fan speed	23
7.4	Checking the CO2 & adjusting the valve	24
7.5	Combustion analysis test	24
7.6	Checking the expansion vessel	24
7.7	External faults	24
7.8	Electrical checks	24
7.9	Fault finding	25
7.10	Component values & characteristics	25
7.11	Boiler configuration	27
7.12	Final fault codes	26

Wiring diagrams		Page
8.1	External wiring	27
8.2	Typical control applications	27
8.3	Other devices	27
8.4	Vokera twin-channel programmer	27

Exploded diagrams		Page
9.1	Table 1	31
9.2	Table 2	32
9.3	Table 3	33
9.4	Table 4	34
9.5	Table 5	35

L.P.G. instructions		Page
10.1	Related documents	36
10.2	Technical data	36
10.3	Converting the appliance gas type	36
10.4	Gas supply	36
10.5	Gas supply installation	36
10.6	Adjusting the gas valve	36
10.7	Appliance fan speed	37

	Benchmark	38-39

INTRODUCTION

The **Mynute HE** comprises a range of high-efficiency system boilers with outputs ranging from 12 to 35kW. These appliances – by design – incorporate electronic ignition, circulating pump, expansion vessel, safety valve, pressure gauge, and automatic by-pass.

The Mynute HE range are produced as room sealed, category II2H3P appliances, suitable for internal wall mounting applications only. Each appliance is provided with a fan powered flue outlet with an annular co-axial combustion air intake that can be rotated – horizontally – through 360 degrees for various horizontal or vertical applications. The Mynute HE can also be used with the Vokera twin flue system. The Mynute HE is approved for use with C13 & C33 type flue applications.

These appliances are designed for use with a sealed system only; consequently they are not intended for use on open vented systems.

This booklet is an integral part of the appliance. It is therefore necessary to ensure that the booklet is handed to the person responsible for the property in which the appliance is located/installed. A replacement copy can be obtained from Vokera customer services.

Mynute 12-15-20-25 HE

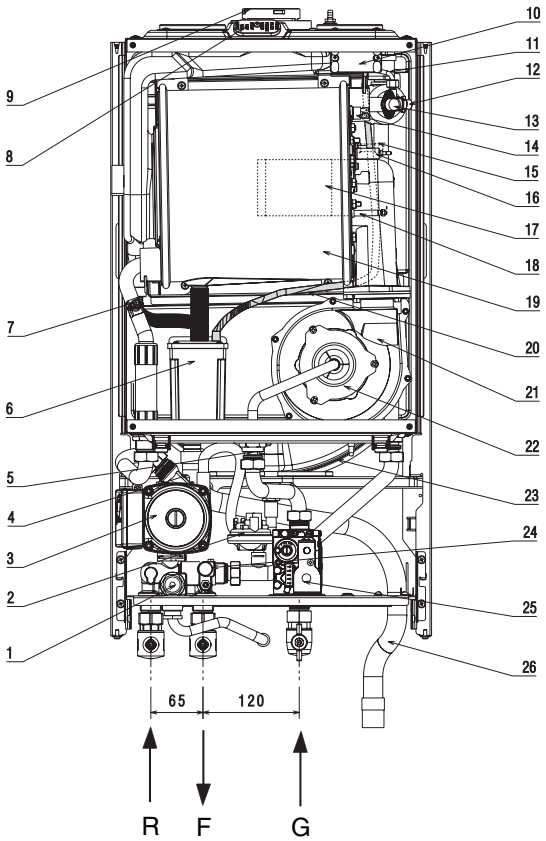

Fig. 1

Mynute 30-35 HE

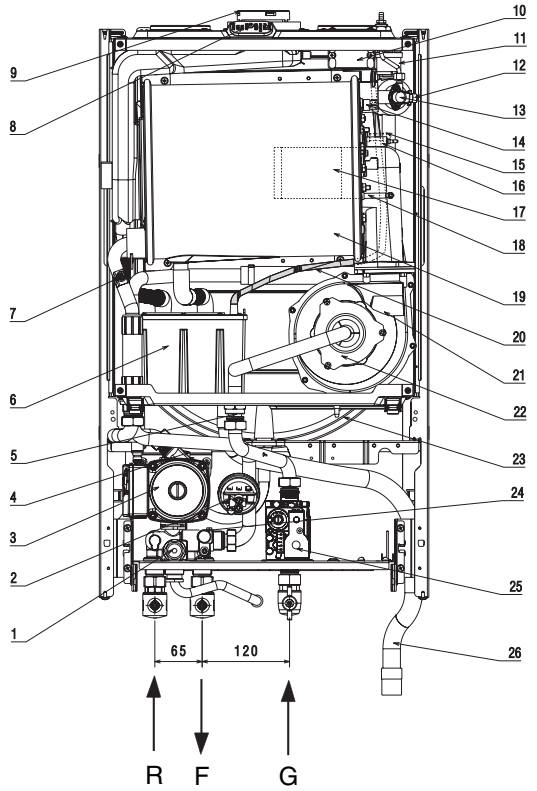

General layout (fig. 1)

1 Safety valve
2 Pressure switch
3 Pump
4 Bottom auto air vent (AAV)
5 Injector
6 Condense trap
7 Return sensor
8 Flue gas analysis test point
9 Flue outlet & air intake
10 Ignition transformer
11 Top AAV
12 Flow sensor
13 High limit thermostat
14 Limit thermostat
15 Sensing Electrode
16 Spark Electrode
17 Cylindric Burner
18 Condensate level sensor
19 Main heat exchanger
20 Top AAV pipe
21 Fan assembly
22 Mixer
23 Expansion vessel
24 Hydraulic manifold
25 Gas valve
26 Condensing drain

R Heating return connection
F Heating flow connection
G Gas connection

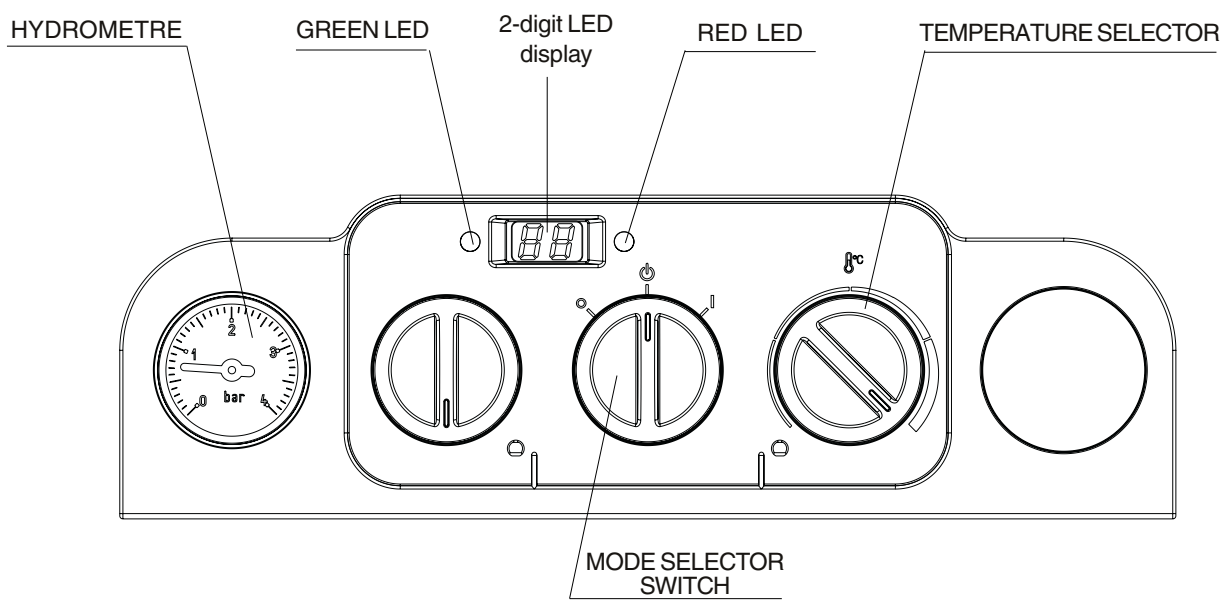

Fig. 1A

	Boiler at reset/standby	Select this position if/when the boiler requires to be reset
	Boiler switched OFF	Select this position if you want the boiler to remain OFF (this will over-ride any heating/hot water request from the time-clock/programmer)
	Boiler switched ON	Select this position when you want the boiler to respond to a heating/hot water request from the time-clock/programmer
°C	Temperature selector	Move the temperature selector clockwise to increase the boiler outlet temperature, or counter-clockwise to reduce the outlet flow temperature
	2-digit LED display	Displays the current outlet temperature of the boiler. During a fault condition, the appropriate fault code will be displayed (refer to the users handbook for instructions regarding fault codes)
	Green LED lit	Boiler is working/responding to a heating/hot water request
	Red LED lit	Boiler has identified a fault and has failed-safe. Refer to users handbook for instructions on how to reset
	Pressure gauge	Ensure the system pressure is set correctly (minimum 0.5-bar)

1.1 PRINCIPLE COMPONENTS

A fully integrated electronic control board featuring electronic temperature control, anti-cycle control, pump over-run, self-diagnostic fault indicator, full air/gas modulation.

- Radial aluminium heat exchanger.
- Electronic ignition with flame supervision
- Integral high-head pump
- Fan
- Expansion vessel
- Water pressure switch
- Condensate level sensor
- Pressure gauge
- Safety valve

1.2 MODE OF OPERATION (at rest)

When the appliance is at rest and there are no requests for heating or hot water, the following functions are active:

- 2-stage frost-protection system – the frost-protection system protects the appliance against the risk of frost damage. The first stage enables activation of the pump should the temperature of the appliance fall to 6°C. Should the first stage become active, the appliance will function on minimum +25% power until it reaches 35°C.
- Anti-block function – the anti-block function enables the pump to be energised for short periods, when the appliance has been inactive for more than 24-hours.

1.3 MODE OF OPERATION

When there is a request for heat and/or hot water, via the programmer/time clock and/or any external control, the pump and fan are started, the fan speed will modulate until the correct signal voltage is received at the control PCB. At this point an ignition sequence is enabled.

Ignition is sensed by the electronic circuitry to ensure flame stability at the burner. Once successful ignition has been achieved, the electronic circuitry increases the gas rate to 75% of the MAX Heating (set by the corresponding HTG trimmer) for a period of 15 minutes. Thereafter, the boiler's output will either be increase to maximum or modulate to suit the set requirement. When the appliance reaches the desired temperature the burner will shut down and the boiler will perform a three-minute anti-cycle (timer delay).

When the request for heat has been satisfied the appliance pump and fan may continue to operate to dissipate any residual heat within the appliance.

1.4 SAFETY DEVICES

When the appliance is in use, safe operation is ensured by:

- a water pressure switch that monitors system water pressure and will de-activate the pump (when lockout condition is reached), fan and burner should the system water pressure drop below the rated tolerance;
- fan speed sensor to ensure safe operation of the burner;
- a high limit thermostat that over-rides the temperature control circuit to prevent or interrupt the operation of the burner;
- flame sensor that will shut down the burner when no flame signal is detected;
- a sensor that interrupts the operation of the appliance if the condense pipe becomes blocked;
- a safety valve which releases excess pressure from the primary circuit.

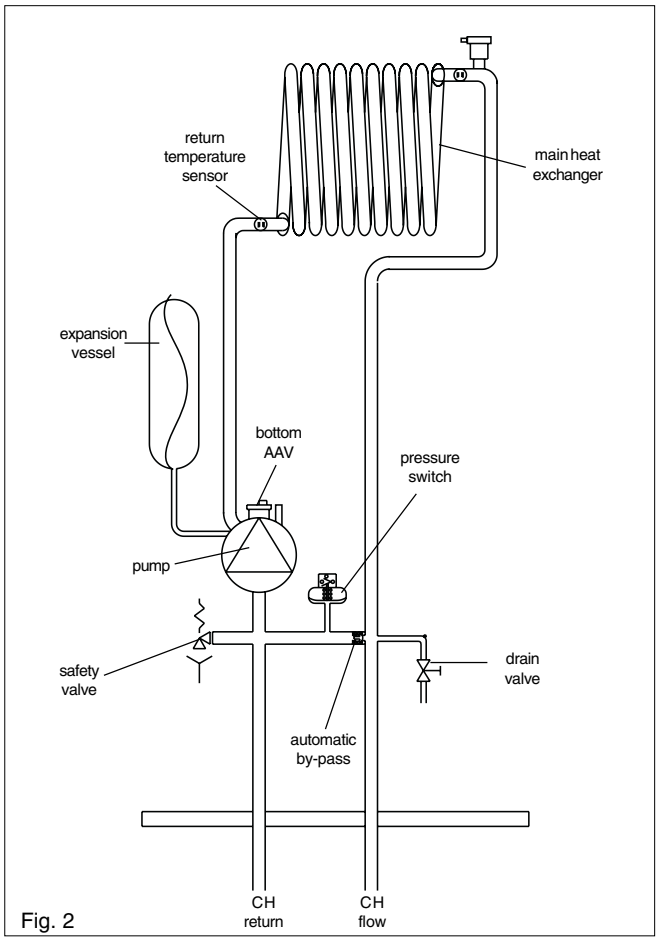

Fig. 2

SECTION 2 TECHNICAL DATA

2.1 Central Heating	12HE	15HE	20HE	25HE	30HE	35HE
Heat input (kW)	12	15	20	25	30	34.6
Maximum heat output (kW) 60/80°C	11.84	14.81	19.68	24.53	29.31	33.67
Minimum heat output (kW) 60/80°C	3.5	3.5	5	6	7	7
Maximum heat output (kW) 30/50°C	12.74	15.90	21.16	26.30	6.84	36.54
Minimum heat output (kW) 30/50°C	3.7	3.71	5.30	6.37	7.41	7.41
Minimum working pressure	0.5 bar					
Maximum working pressure	2.7 bar					
Minimum flow rate	350 l/h					
2.2 Gas Pressures	**12HE**	**15HE**	**20HE**	**25HE**	**30HE**	**35HE**
Inlet pressure (G20)	20.0 mbar					
Maximum gas rate (m^3/hr)	1.27	1.59	2.12	2.64	3.17	3.66
Minimum gas rate (m^3/hr)	0.37	0.37	0.53	0.63	0.74	0.74
Injector size	4.6mm	4.6mm	4.6mm	6.7mm	7.0mm	7.0mm
2.3 Expansion Vessel	**12HE**	**15HE**	**20HE**	**25HE**	**30HE**	**35HE**
Capacity	6-litres			8-litres	10-litres	
Maximum system volume	63-litres			76-litres	91-litres	
Pre-charge pressure	1.0 bar					
2.4 Dimensions	**12HE**	**15HE**	**20HE**	**25HE**	**30HE**	**35HE**
Height	740mm			780mm	780mm	
Width	400mm			400mm	450mm	
Depth	340mm			358mm	358mm	
Dry weight (kg)						
2.5 Clearances	**Mynute HE Range**					
Sides	12mm					
Top	150mm from casing or 25mm above flue elbow (whichever is applicable)					
Bottom	150mm					
Front	600mm					
2.6 Connections	**Mynute HE Range**					
Flow & return	22mm					
Gas	15mm					
Safety valve	15mm					
Condense	21mm					
2.7 Electrical	**12HE**	**15HE**	**20HE**	**25HE**	**30HE**	**35HE**
Power consumption (Watts)	150	150	150	150	165	165
Supply (V/Hz)	230/50					
Internal fuse	3.15A T (for PCB) - 3.15A F (for connections block)					
External fuse	3A					
2.8 Flue Details (concentric - 60/100)	**12HE**	**15HE**	**20HE**	**25HE**	**30HE**	**35HE**
Maximum horizontal flue length (60/100mm)	7.8m	7.8m	7.8m	7.8m	7.8m	7.8m
Maximum vertical flue length (60/100mm)	8.8m	8.8m	8.8m	8.8m	8.8m	8.8m
2.8A Flue Details (concentric 80/125mm)	**12HE**	**15HE**	**20HE**	**25HE**	**30HE**	**35HE**
Maximum horizontal flue length (80/125mm)	20m	20m	20m	20m	20m	20m
Maximum vertical flue length (80/125mm)	25m	25m	25m	25m	25m	25m
2.8A Flue Details (twin pipes)	**12HE**	**15HE**	**20HE**	**25HE**	**30HE**	**35HE**
Maximum horizontal flue length (80mm/80mm)	40m/40m	40m/40m	40m/40m	40m/40m	40m/40m	40m/40m
Maximum vertical flue length (80mm/80mm)	40m/40m	40m/40m	40m/40m	40m/40m	40m/40m	40m/40m
2.9 Efficiency	**12HE**	**15HE**	**20HE**	**25HE**	**30HE**	**35HE**
SEDBUK (%)	90.7 Band 'A'	90.7 Band 'A'	90.5 Band 'A'	90.4 Band 'A'	90.2 Band 'A'	90.0 Band 'A'
2.10 Emissions	**12HE**	**15HE**	**20HE**	**25HE**	**30HE**	**35HE**
CO_2 @ maximum output (%)	9.0	9.0	9.0	9.0	9.0	9.0
CO_2 @ minimum output (%)	9.0	9.0	9.0	9.0	9.0	9.0
CO/CO_2 ratio @ maximum output	0.001 to 1	0.001 to 1	0.001 to 1	0.0002 to 1	0.0002 to 1	0.0002 to 1
CO/CO_2 ratio @ minimum output	0.0002 to 1	0.0002 to 1	0.0004 to 1	0.0003 to 1	0.0003 to 1	0.0003 to 1
CO @ maximum output (mg/kWh)	107.5	129.0	161.3	204.3	215	268.8
CO @ minimum output (mg/kWh)	21.5	21.5	43.0	32.3	32.3	32.3
NOx @ maximum output mg/kWh)	88.3	88.3	79.4	88.3	88.3	88.3
NOx @ minimum output (mg/kWh)	35.3	35.5	53.0	61.8	70.6	70.6
NOx rating	class 5	class 5	class 5	class 5	class 5	class 5

Ref. Condition 15 °C, 1013,25 mbar, dry gas
NOTE: L.P.G. data refer to section 10

2.11 PUMP DUTY

Fig. 3 shows the flow-rate available – after allowing for pressure loss through the appliance – for system requirements. When using this graph, apply only the pressure loss of the system. The graph is based on a 20 °C temperature differential.

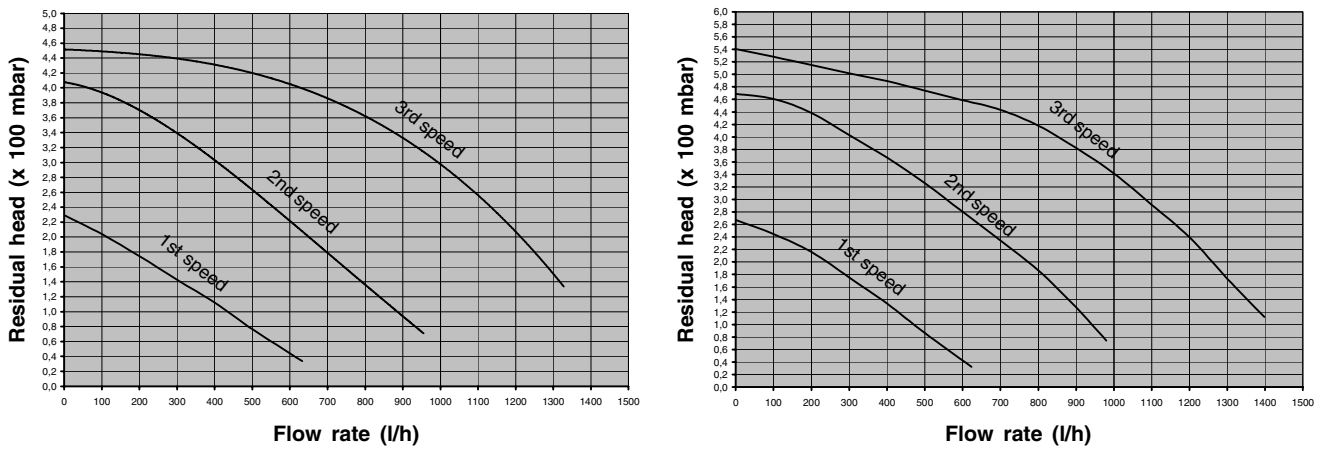

Fig. 3

Fig. 4

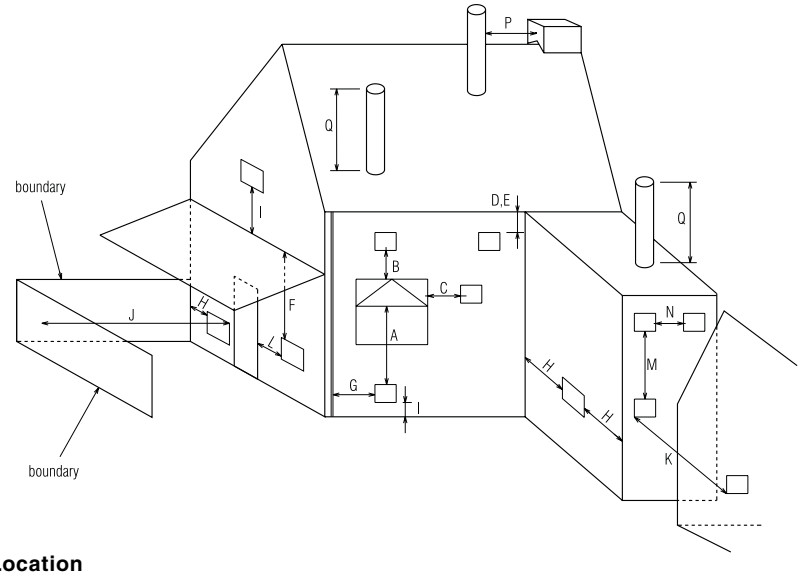

Key	Location	Minimum distance
A	Below an opening (window, air-brick, etc.)	300 mm
B	Above an opening (window, air-brick, etc.)	300 mm
C	To the side of an opening (window, air-brick, etc.)	300 mm
D	Below gutter, drain-pipe, etc.	25 mm
E	Below eaves	25 mm
F	Below balcony, car-port roof, etc.	25 mm
G	To the side of a soil/drain-pipe, etc.	25 mm
H	From internal/external corner or boundary	300 mm
I	Above ground, roof, or balcony level	300 mm
J	From a surface or boundary facing the terminal	1200 mm
K	From a terminal facing a terminal	1200 mm
L	From an opening in the car-port into the building	1200 mm
M	Vertically from a terminal on the same wall	1500 mm
N	Horizontally from a terminal on the same wall	300 mm
P	From a structure to the side of the vertical terminal	500 mm
Q	From the top of the vertical terminal to the roof flashing	As determined by the fixed collar of the vertical terminal

This appliance must be installed by a competent person in accordance with the Gas Safety (Installation & Use) Regulations.

3.1 RELATED DOCUMENTS

The installation of this boiler must be in accordance with the relevant requirements of the Gas Safety (Installation & Use) Regulations, the local building regulations, the current I.E.E. wiring regulations, the bylaws of the local water undertaking, the Building Standards (Scotland) Regulation, and Building Standards (Northern Ireland) Regulations.

It should be in accordance also with any relevant requirements of the local authority and the relevant recommendations of the following British Standard Codes of Practice.

3.2 LOCATION OF APPLIANCE

The appliance may be installed in any room or internal space, although particular attention is drawn to the requirements of the current I.E.E. wiring regulations, and in Scotland, the electrical provisions of the Building Regulations, with respect to the installation of the appliance in a room or internal space containing a bath or shower.

When an appliance is installed in a room or internal space containing a bath or shower, the appliance or any control pertaining to it must not be within reach of a person using the bath or shower.

BS 5440	**PART 2**	**FLUES & VENTILATION**
BS 5449	**PART 1**	**FORCED CIRCULATION HOT WATER SYSTEMS**
BS 6798		**INSTALLATION OF BOILERS OF RATED INPUT NOT EXCEEDING 60kW**
BS 6891		**LOW PRESSURE INSTALLATION PIPES**
BS 7074	**PART 1**	**APPLICATION, SELECTION, AND INSTALLTION OF EXPANSION VESSELS AND ANCILLARY EQUIPMENT FOR SEALED WATER SYSTEMS**

The location chosen for the appliance must permit the provision of a safe and satisfactory flue and termination. The location must also permit an adequate air supply for combustion purposes and an adequate space for servicing and air circulation around the appliance. Where the installation of the appliance will be in an unusual location special procedures may be necessary, BS 6798 gives detailed guidance on this aspect.

A compartment used to enclose the appliance must be designed and constructed specifically for this purpose. An existing compartment/cupboard may be utilised provided that it is modified to suit. Details of essential features of compartment/cupboard design including airing cupboard installations are given in BS 6798. This appliance is not suitable for external installation.

3.3 GAS SUPPLY

The gas meter – as supplied by the gas supplier – must be checked to ensure that it is of adequate size to deal with the maximum rated input of all the appliances that it serves. Installation pipes must be fitted in accordance with BS 6891.

Pipe work from the meter to the appliance must be of adequate size. Pipes of a smaller size than the appliance gas inlet connection must not be used. The installation must be tested for soundness in accordance with BS6891.

If the gas supply serves more than one appliance, it must be ensured that an adequate supply is maintained to each appliance when they are in use at the same time.

3.4 FLUE SYSTEM

The terminal should be located where the dispersal of combustion products is not impeded and with due regard for the damage and discoloration that may occur to building products located nearby. The terminal must not be located in a place where it is likely to cause a nuisance (see fig. 4).

In cold and/or humid weather, water vapour will condense on leaving the terminal; the effect of such pluming must be considered.

If installed less than 2m above a pavement or platform to which people have access (including balconies or flat roofs) the terminal must be protected by a guard of durable material. The guard must be fitted centrally over the terminal. Refer to BS 5440 Part 1, when the terminal is 0.5 metres (or less) below plastic guttering or 1 metre (or less) below painted eaves.

3.5 AIR SUPPLY

The following notes are intended for general guidance only.

This appliance is a room-sealed, fan-flued boiler, consequently it does not require a permanent air vent for combustion air supply.

When installed in a cupboard or compartment, ventilation for cooling purposes is also not required.

3.6 WATER CIRCULATION

Detailed recommendations are given in BS 5449 Part 1 and BS 6798. The following notes are for general guidance only.

3.6.1 PIPEWORK

It is recommended that copper tubing to BS 2871 Part 1 is used in conjunction with soldered capillary joints.

Where possible pipes should have a gradient to ensure air is carried naturally to air release points and that water flows naturally to drain cocks.

Except where providing useful heat, pipes should be insulated to avoid heat loss and in particular to avoid the possibility of freezing. Particular attention should be paid to pipes passing through

ventilated areas such as under floors, loft space, and void areas.

3.6.2 AUTOMATIC BY-PASS

The appliance has a built-in automatic by-pass, consequently there is no requirement for an external by-pass, however the design of the system should be such that it prevents boiler 'cycling'.

3.6.3 DRAIN COCKS

These must be located in accessible positions to facilitate draining of the appliance and all water pipes connected to the appliance. The drain cocks must be manufactured in accordance with BS 2879.

3.6.4 AIR RELEASE POINTS

These must be positioned at the highest points in the system where air is likely to be trapped. They should be used to expel trapped air and allow complete filling of the system.

3.6.5 EXPANSION VESSEL

The appliance has an integral expansion vessel to accommodate the increased volume of water when the system is heated. It can accept up to 6 litres (12-15-20HE), 8 (25HE) and 10 litres (30-35HE) of expansion from within the system, generally this is sufficient, however if the system has an unusually high water content, it may be necessary to provide additional expansion capacity (see 6.19).

3.6.6 FILLING POINT

A method for initial filling of the system and replacing water lost during servicing etc. is required (see fig. 5). This method of filling must comply with the current Water Supply (Water Fittings) Regulations 1999 and Water Bylaws 2000 (Scotland).

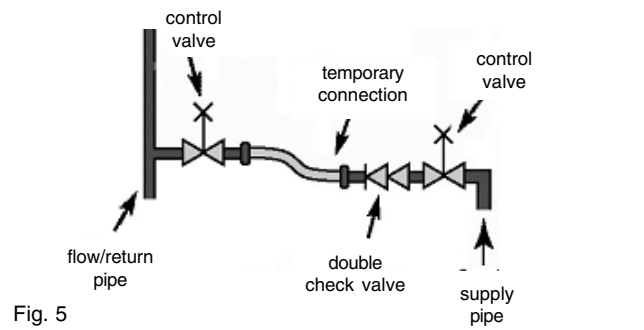

Fig. 5

3.6.7 LOW PRESSURE SEALED SYSTEM

An alternative method of filling the system would be from an independent make-up vessel or tank mounted in a position at least 1 metre above the highest point in the system and at least 5 metres above the boiler (see fig. 5A).

The cold feed from the make-up vessel or tank must be fitted with an approved non-return valve and stopcock for isolation purposes. The feed pipe should be connected to the return pipe as close to the boiler as possible.

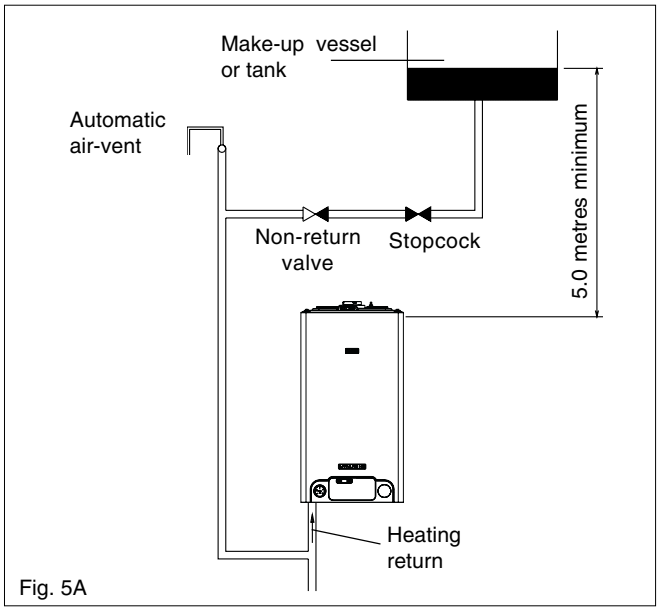

Fig. 5A

3.6.8 FREQUENT FILLING

Frequent filling or venting of the system may be indicative of a leak. Care should be taken during the installation of the appliance to ensure all aspects of the system are capable of withstanding pressures up to at least 3 bar.

3.7 ELECTRICAL SUPPLY

The appliance is supplied for operation on 230V @ 50Hz electrical supply; it must be protected with a 3-amp fuse. The method of connection to the mains electricity supply must allow for complete isolation from the supply. The preferred method is by using a double-pole switch with a contact separation of at least 3,5mm (3° high-voltage category). The switch must only supply the appliance and its corresponding controls, i.e. time clock, room thermostat, etc. Alternatively an unswitched shuttered socket with a fused 3-pin plug both complying with BS 1363 is acceptable.

3.8 MOUNTING ON A COMBUSTIBLE SURFACE

If the appliance is to be fitted on a wall of combustible material, a sheet of fireproof material must protect the wall.

3.9 TIMBER FRAMED BUILDINGS

If the appliance is to be fitted in a timber framed building, it should be fitted in accordance with the Institute of Gas Engineers publication (IGE/UP/7) 'Guide for Gas Installations in Timber Frame Buildings'.

3.10 INHIBITORS

Vokera recommend that an inhibitor - suitable for use with copper and aluminium heat exchangers - is used to protect the boiler and system from the effects of corrosion and/or electrolytic action. The inhibitor must be administered in strict accordance with the manufacturers instructions*.

*Water treatment of the complete heating system - including the boiler - should be carried out in accordance with BS 7593 and the Domestic Water Treatment Association's (DWTA) code of practice.

This appliance must be installed by a competent person in accordance with and defined by, the Standard Specification (Domestic Gas Installations) Declaration (I.S. 813).

3A.1 RELATED DOCUMENTS

The installation of this boiler must be in accordance with the relevant requirements of the local building regulations, the current ETCI National Rules for Electrical Installations and the bylaws of the local water undertaking.

It should be in accordance also with any relevant requirements of the local and/or district authority.

3A.2 LOCATION OF APPLIANCE

The appliance may be installed in any room or internal space, although particular attention is drawn to the requirements of the current ETCI National Rules for Electrical Installations, and I.S. 813, Annex K.

When an appliance is installed in a room or internal space containing a bath or shower, the appliance or any control pertaining to it must not be within reach of a person using the bath or shower.

The location chosen for the appliance must permit the provision of a safe and satisfactory flue and termination. The location must also permit an adequate air supply for combustion purposes and an adequate space for servicing and air circulation around the appliance. Where the installation of the appliance will be in an unusual location special procedures may be necessary, refer to I.S. 813 for detailed guidance on this aspect.

A compartment used to enclose the appliance must be designed and constructed specifically for this purpose. An existing compartment/cupboard may be utilised provided that it is modified to suit.

This appliance is not suitable for external installation.

3A.3 GAS SUPPLY

The gas meter – as supplied by the gas supplier – must be checked to ensure that it is of adequate size to deal with the maximum rated input of all the appliances that it serves. Installation pipes must be fitted in accordance with I.S. 813.

Pipe work from the meter to the appliance must be of adequate size. Pipes of a smaller size than the appliance gas inlet connection must not be used. The installation must be tested for soundness in accordance with I.S. 813.

If the gas supply serves more than one appliance, it must be ensured that an adequate supply is maintained to each appliance when they are in use at the same time.

3A.4 FLUE SYSTEM

The terminal should be located where the dispersal of combustion products is not impeded and with due regard for the damage and discoloration that may occur to building products located nearby. The terminal must not be located in a place where it is likely to cause a nuisance (see I.S. 813).

In cold and/or humid weather, water vapour will condense on leaving the terminal; the effect of such pluming must be considered.

If installed less than 2m above a pavement or platform to which people have access (including balconies or flat roofs) the terminal must be protected by a guard of durable material. The guard must be fitted centrally over the terminal. Refer to I.S. 813, when the terminal is 0.5 metres (or less) below plastic guttering or 1 metre (or less) below painted eaves.

3A.5 AIR SUPPLY

The following notes are intended for general guidance only.

This appliance is a room-sealed, fan-flued boiler, consequently it does not require a permanent air vent for combustion air supply.

When installed in a cupboard or compartment, ventilation for cooling purposes is also not required.

3A.6 WATER CIRCULATION

Specific recommendations are given in I.S. 813. The following notes are for general guidance only.

3A.6.1 PIPEWORK

It is recommended that copper tubing be used in conjunction with soldered capillary joints.

Where possible pipes should have a gradient to ensure air is carried naturally to air release points and that water flows naturally to drain cocks.

Except where providing useful heat, pipes should be insulated to avoid heat loss and in particular to avoid the possibility of freezing. Particular attention should be paid to pipes passing through ventilated areas such as under floors, loft space, and void areas.

3A.6.2 AUTOMATIC BY-PASS

The appliance has a built-in automatic by-pass, consequently there is no requirement for an external by-pass, however the design of the system should be such that it prevents boiler 'cycling'.

3A.6.3 DRAIN COCKS

These must be located in accessible positions to facilitate draining of the appliance and all water pipes connected to the appliance.

3A.6.4 AIR RELEASE POINTS

These must be positioned at the highest points in the system where air is likely to be trapped. They should be used to expel trapped air and allow complete filling of the system.

3A.6.5 EXPANSION VESSEL

The appliance has an integral expansion vessel to accommodate the increased volume of water when the system is heated. It can accept up to 6 litres (12-15-20HE), 8 (25HE) and 10 litres (30-35HE) of expansion from within the system, generally this is sufficient, however if the system has an unusually high water content, it may be necessary to provide additional expansion capacity (see 6.19).

3A.6.6 FILLING POINT

A method for initial filling of the system and replacing water lost during servicing etc. is required. You should ensure this method of filling complies with the local water authority regulations.

3A.6.7 LOW PRESSURE SEALED SYSTEM

An alternative method of filling the system would be from an independent make-up vessel or tank mounted in a position at least 1 metre above the highest point in the system and at least 5 metres above the boiler (see fig. 5).

The cold feed from the make-up vessel or tank must be fitted with an approved non-return valve and stopcock for isolation purposes. The feed pipe should be connected to the return pipe as close to the boiler as possible.

3A.6.8 FREQUENT FILLING

Frequent filling or venting of the system may be indicative of a leak. Care should be taken during the installation of the appliance to ensure all aspects of the system are capable of withstanding pressures up to at least 3 bar.

3A.7 ELECTRICAL SUPPLY

The appliance is supplied for operation on 230V @ 50Hz electrical supply; it must be protected with a 3-amp fuse. The method of connection to the mains electricity supply must allow for complete isolation from the supply. The preferred method is by using a double-pole switch with a contact separation of at least 3,5mm (3° high-voltage category). The switch must only supply the appliance and its corresponding controls, i.e. time clock, room thermostat, etc.

3A.8 MOUNTING ON A COMBUSTIBLE SURFACE

If the appliance is to be fitted on a wall of combustible material, a sheet of fireproof material must protect the wall.

3A.9 TIMBER FRAMED BUILDINGS

If the appliance is to be fitted in a timber framed building, it should be fitted in accordance with I.S. 813 and local Building Regulations.

The Institute of Gas Engineers publication (IGE/UP/7) 'Guide for Gas Installations in Timber Frame Buildings' gives specific advice on this type of installation.

3A.10 INHIBITORS

Vokera recommend that an inhibitor - suitable for use with aluminium heat exchangers - is used to protect the boiler and system from the effects of corrosion and/or electrolytic action. The inhibitor must be administered in strict accordance with the manufacturers instructions*.

*Water treatment of the complete heating system - including the boiler - should be carried out in accordance with I.S. 813 and the Domestic Water Treatment Association's (DWTA) code of practice.

3A.11 DECLARATION OF CONFORMITY

A Declaration of Conformity (as defined in I.S. 813) must be provided on completion of the installation. A copy of the declaration must be given to the responsible person and also to the gas supplier if required.

Mynute 12-15-20 HE

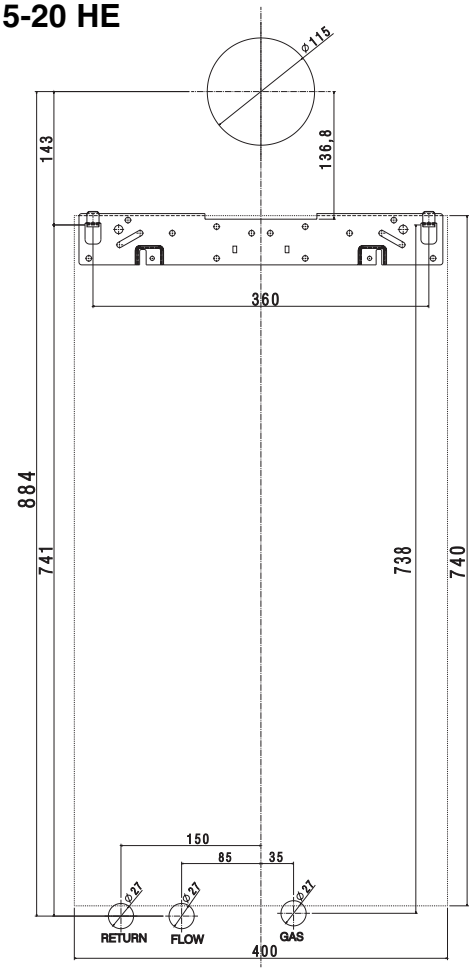

Mynute 25-30-35 HE

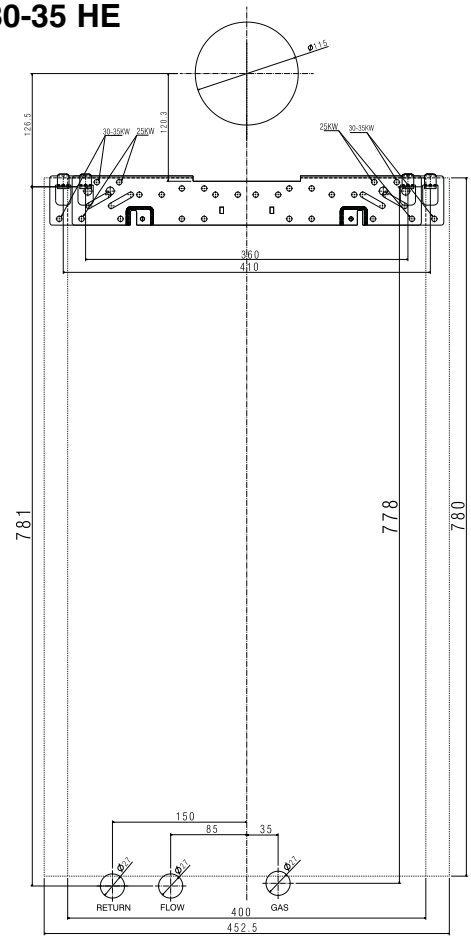

Fig. 6

4.1 DELIVERY

Due to the weight of the appliance it may be necessary for two people to lift and attach the appliance to its mounting. The appliance is contained within a heavy-duty cardboard carton. Lay the carton on the floor with the writing the correct way up.

4.2 CONTENTS

Contained within the carton is:

- the boiler
- the wall bracket
- template
- an accessories pack containing appliance service connections and washers
- the instruction pack containing the installation & servicing instructions, user instructions, guarantee registration card, and a 3-amp fuse.

4.3 UNPACKING

At the top of the carton pull both sides open – do not use a knife – unfold the rest of the carton from around the appliance, carefully remove all protective packaging from the appliance, and lay the accessories etc. to one side. Protective gloves should be used to lift the appliance, the appliance back-frame should be used for lifting points.

4.4 PREPARATION FOR MOUNTING THE APPLIANCE

The appliance should be mounted on a smooth, vertical, non-combustible surface, which must be capable of supporting the full weight of the appliance. Care should be exercised when determining the position of the appliance with respect to hidden obstructions such as pipes, cables, etc.

When the position of the appliance has been decided – using the template supplied – carefully mark the position of the wall- mounting bracket (see fig. 6) and flue-hole (if applicable).

4.5 FITTING THE FLUE

The top flue outlet permits both horizontal and vertical flue applications to be considered, alternatively, the Vokera twin flue system can be utilised if longer flue runs are required.

4.5.1 CONCENTRIC HORIZONTAL FLUE

(For concentric vertical flue, see 4.5.2)
(For twin flue applications, see 4.5.3)

The appliance can be used with either the Vokera condensing 60/100mm concentric flue system or the optional 80/125mm concentric flue system.

NOTE

These instructions relate **only** to the Vokera condensing 60/100mm concentric flue system. For specific details on the installation of the 80/125mm concentric flue system please refer to the instructions supplied.

The appliance flue outlet elbow can be rotated through 360° on its vertical axis. In addition the flue may be extended from the outlet elbow in the horizontal plane (see 2.8). A reduction must also be made to the maximum length (see table below) when additional bends are used.

Reduction for additional bends

Bend	Reduction in maximum flue length for each bend
45° bend	0.5 metre
90° bend	1.0 metre

Horizontal flue terminals and accessories

Part No.	Description	Length
520	Horizontal flue kit	900 mm
521	Telescopic flue kit	350 /530 mm
522	Plume management kit	1370 mm
523	90-degree bend	N/A
524	45-degree bends (pair)	N/A
525	500mm extension	500mm
526	1000mm extension	1000 mm
527	2000m extension	2000 mm
528	Telescopic extension	350 /730 mm
529	Wall bracket pack (5)	208mm

Using the template provided, mark and drill a 115mm hole for the passage of the flue pipe. The hole should be drilled to ensure any condense fluid that forms, is allowed to drain back to the appliance (see fig. 7A).

The fixing holes for the wall-mounting bracket should now be drilled and plugged, an appropriate type and quantity of fixing should be used to ensure that the bracket is mounted securely. Once the bracket has been secured to the wall, mount the appliance onto the bracket.

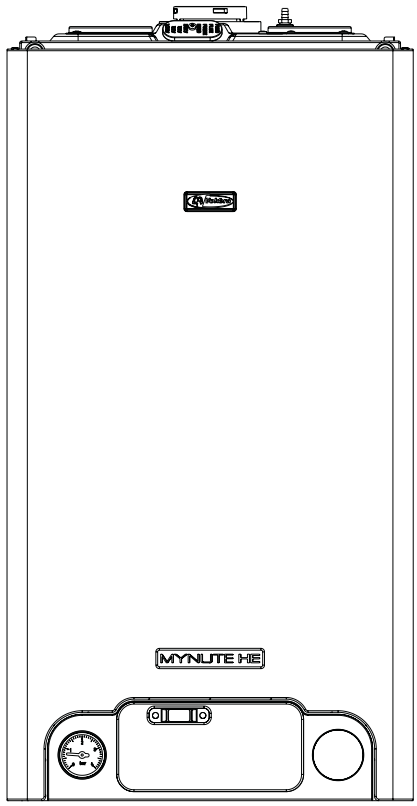

Fig. 7

FITTING THE HORIZONTAL FLUE KIT

Carefully measure the distance from the centre of the appliance flue outlet to the edge of the finished outside wall (dimension X). Add 65mm to dimension X to give you Dimension Y (see fig 7A). Measure dimension Y from the terminal end of the concentric flue pipe and cut off the excess ensuring any burrs are removed. Pass the concentric flue pipe through the previously drilled hole. Fit the flue bend to the boiler flue outlet and insert the concentric flue pipe into the flue bend ensuring the correct seal is made.

Using the clamp, gasket, and screws supplied, secure the flue bend to the appliance flue spigot.

NOTE

Fit the internal (white) trim to the flue assembly prior to connecting the flue pipe to the bend.

You must ensure that the entire flue system is properly supported and connected.

Seal the flue assembly to the wall using cement or a suitable alternative that will provide satisfactory weatherproofing. The exterior trim can now be fitted.

4.5.1.1 EXTENDING THE FLUE

Connect the bend – supplied with the terminal kit – to the top of the boiler using clamp (supplied) see fig. 7. The additional bends & extensions have push-fit connections, care should be taken to ensure that the correct seal is made when assembling the flue system. Connect the required number of flue extensions or bends (up to the maximum equivalent flue length) to the flue terminal (see fig. 7 & 8).

The flue system should have a minimum of 1°; maximum of 3° rise from the boiler to outside, to ensure any condense fluid that forms, is allowed to drain back to the appliance.

NOTE

When cutting an extension to the required length, you must ensure that the excess is cut from the plain end of the extension (see fig. 7 & 8). Remove any burrs, and check that all seals are located properly.

You must ensure that the entire flue system is properly supported and connected.

Seal the flue assembly to the wall using cement or a suitable alternative that will provide satisfactory weatherproofing. The interior and exterior trim can now be fitted.

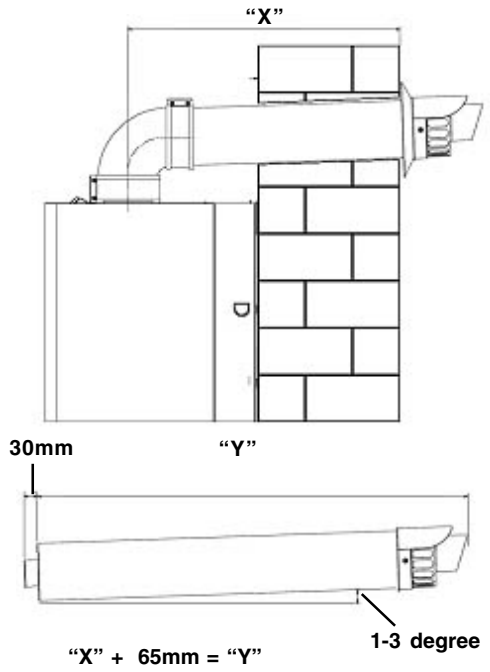

Fig. 7A

4.5.2 CONCENTRIC VERTICAL FLUE

The appliance can be used with either the Vokera condensing 60/100mm concentric flue system or the optional 80/125mm concentric flue system.

NOTE

These instructions relate **only** to the Vokera condensing 60/100mm concentric flue system. For specific details on the installation of the 80/125mm concentric flue system please refer to the instructions supplied.

The vertical flue terminal can be connected directly to the appliance flue outlet. Alternatively, an extension or bend can be connected to the appliance flue outlet if desired (see 4.4.2), however if additional bends are fitted, a reduction must be made to the maximum flue length (see table in the next page).

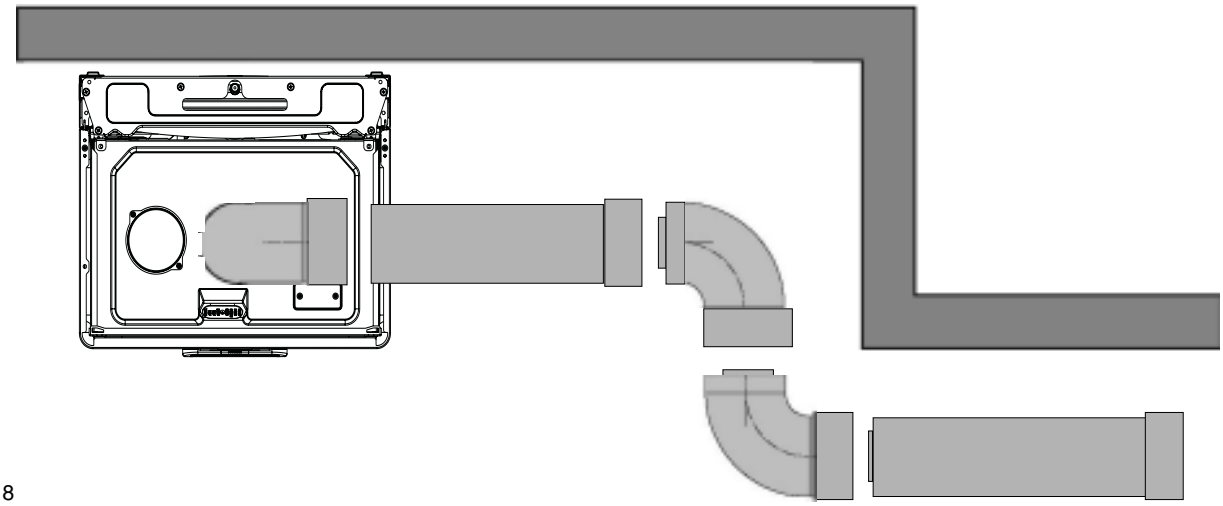

Fig. 8

Reduction for bends

Bend	Reduction in maximum flue length for each bend
45° bend	0.5 metre
90° bend	1.0 metre

Vertical flue terminal and accessories

Part No.	Description	Min-Max length
530	Vertical flue terminal	1000 mm
531	Pitched roof flashing plate	N/A
532	Flat roof flashing plate	N/A
523	90-degree bend	N/A
524	45-degree bends (pair)	N/A
525	500mm extension	500mm
526	1000mm extension	1000 mm
527	2000mm extension	2000 mm
528	Telescopic extension	350/730mm
529	Wall bracket pack (5)	208mm

Using the dimensions given in fig. 9 as a reference, mark and cut a 115mm hole in the ceiling and/or roof.

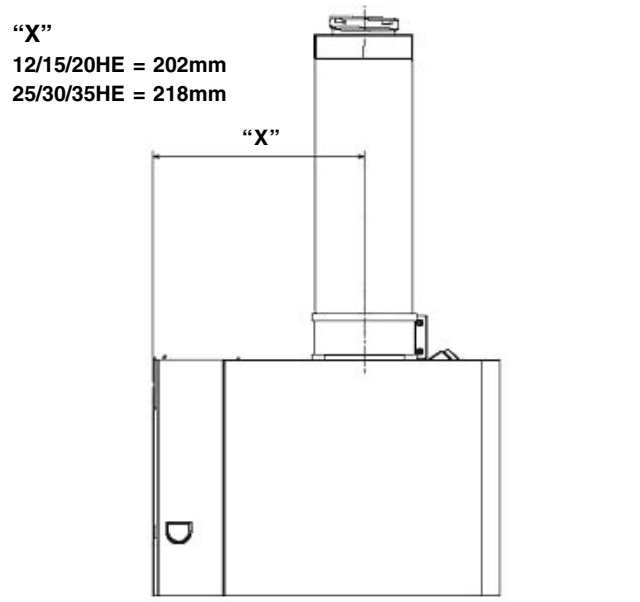

Fig. 9

Fit the appropriate flashing plate to the roof and insert the vertical flue terminal through the flashing plate from the outside, ensuring that the collar on the flue terminal fits over the flashing.

The fixing holes for the wall-mounting bracket should now be drilled and plugged, an appropriate type and quantity of fixing should be used to ensure that the bracket is mounted securely. Once the bracket has been secured to the wall, mount the appliance onto the bracket.

IMPORTANT

The vertical flue terminal is 1.0 metre in length and cannot be cut; therefore it may be necessary to adjust the height of the appliance to suit or use a suitable extension.

Connect the vertical flue assembly to the boiler flue spigot using the 100mm clip, gasket, & screws (supplied), ensuring the correct seal is made. The flue support bracket (supplied with the vertical flue kit) can now be fitted.

If the vertical flue requires extension/s or additional bend/s, connect the required number of flue extensions or bends (up to the maximum equivalent flue length) between the boiler and vertical flue assembly (see fig. 8).

Ensure that any horizontal sections of the flue system have a minimum 1°; maximum 3° fall back to the boiler (1° = 17mm per 1000mm)

NOTE

When cutting an extension to the required length, you must ensure that the excess is cut from the plain end of the extension (see fig. 8). Remove any burrs, and check that any seals are located properly.

You must ensure that the entire flue system is properly supported and connected.

4.5.3 TWIN FLUE SYSTEM

The Vokera twin flue system enables greater flue distances to be achieved (see 4.4.2) than that of a concentric flue system. It can be used for horizontal or vertical applications, however the twin flue system must be converted to the dedicated concentric flue kit for termination. It is essential that the installation of the twin flue system be carried out in strict accordance with these instructions.

GUIDANCE NOTES ON TWIN FLUE INSTALLATION

- The flue must have a minimum 1°; maximum 3° (1° = 17mm per 1000mm) fall back to the appliance to allow any condensate that may form in the flue system to drain via the condensate drain. Consideration must also be given to the fact that there is the possibility of a small amount of condensate dripping from the terminal.
- Ensure that the entire flue system is adequately supported, use at least one bracket for each extension.
- The entire flue system must be adequately insulated to maintain heat within the flue system thereby reducing the possibility of condensate production.
- As the exhaust outlet pipe can reach very high temperatures it must be protected to prevent persons touching the hot surface.
- The condensate drain pipe must be connected in accordance with building regulations

Reduction for bends

Bend	Reduction in maximum flue length for each bend
45° bend	1.0 metre
90° bend	1.0 metre

Twin flue accessories

Part No.	Description	Length
0225805	Horizontal flue terminal	1.0 metre
0225810	Vertical flue terminal	1.0 metre
430	Twin adapter kit	N/A
531	Pitched roof flashing plate	N/A
532	Flat roof flashing plate	N/A
0225815	Condensate drain kit	N/A
0225820	0.25m extension (pair)	250mm
0225825	0.5m extension (pair)	500mm
0225830	1.0m extension (pair)	1000mm
0225835	2.0m extension (pair)	2000mm
0225840	45º bend (pair)	N/A
0225845	90º bend (pair)	N/A
0225850	Twin bracket (5)	N/A
0225855	Single bracket (5)	N/A

MOUNTING THE BOILER

The fixing holes for the wall-mounting bracket should now be drilled and plugged, an appropriate type and quantity of fixing should be used to ensure that the bracket is mounted securely. Once the bracket has been secured to the wall, mount the appliance onto the bracket.

4.5.3.1 INSTALLATION OF TWIN ADAPTOR KIT (fig. 10 & 11)

- Insert the exhaust connection manifold (**A**) onto the appliance flue outlet.
- Remove the blanking plate (located to the right of the appliance flue outlet) and – using the same screws – install the air inlet plate (**B**).
- Using the hole in the exhaust connection manifold as a guide, drill a 3mm hole in the appliance flue spigot and secure the exhaust manifold connection to the flue spigot using the screw provided (**C**).
- Using the two holes in the air inlet plate as a guide, drill a 3mm hole in each and secure the air inlet pipe/bend using the screws provided.
  The twin flue pipes extensions and accessories can now be installed by pushing together (the plain end of each extension or bend should be pushed approximately 50mm into the female socket of the previous piece).

Fig. 10

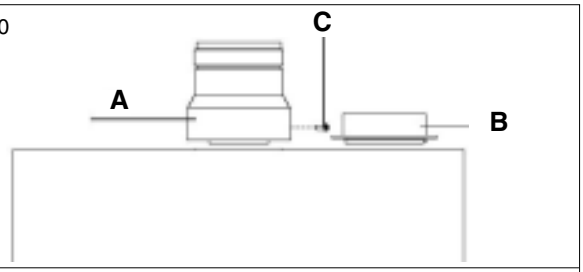

Fig. 11

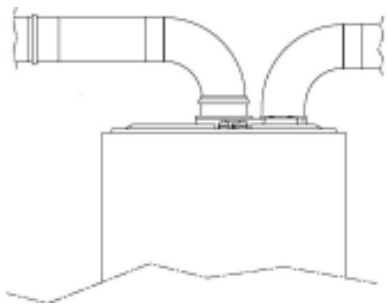

4.5.3.2 HORIZONTAL TERMINATION (fig. 12)

The twin flue system must be converted to the dedicated concentric flue kit for termination.

- The horizontal terminal is supplied with a built-in converter box and cannot be shortened.
- A 130mm hole is required for the passage of the concentric terminal through the wall.
- The air inlet pipe must always be level with or below, that of the exhaust pipe.

Depending on site conditions it may be preferable to install the terminal assembly prior to fitting the twin flue pipes.

Mark and drill a level 130mm hole for the passage of the horizontal flue terminal. Insert the terminal assembly into the flue hole.

Push-fit the twin flue pipes onto the concentric to twin converter box ensuring that the exhaust pipe connects to the exhaust connection on the concentric to twin converter.

If necessary cut the plain ends (male) of the twin flue pipes to allow connection to the concentric to twin converter.

NOTE

Before cutting twin flue pipes ensure allowances have been made for connection onto the previous piece and onto the concentric to twin converter. The last twin Flue pipes must be pushed 50mm onto the male spigots of the concentric to twin converter.

NOTE

Seal the flue terminal assembly to the wall using cement or a suitable alternative that will provide satisfactory weatherproofing. The interior and exterior trim can now be fitted.

4.5.3.3 VERTICAL TERMINATION (fig. 13)

The twin flue system must be converted to the dedicated concentric flue kit for termination.

- The vertical terminal is supplied with a built-in converter box and cannot be shortened.
- A 130mm hole is required for the passage of the concentric terminal through the ceiling and/ or roof.

Depending on site conditions it may be preferable to install the terminal assembly prior to fitting the twin flue pipes.

Fit the appropriate flashing plate to the roof and insert the vertical flue terminal through the flashing plate from the outside, ensuring that the collar on the flue terminal fits over the flashing.

Push-fit the twin flue pipes onto the concentric to twin converter ensuring that the exhaust pipe connects to the exhaust connection on the concentric to twin converter.

If necessary cut the plain ends (male) of the twin flue pipes to allow connection to the concentric to twin converter.

NOTE

- Before cutting twin flue pipes ensure allowances have been made for connection onto the previous piece and onto the concentric to twin converter. The last twin flue pipes must be pushed 50mm onto the male spigots of the concentric to twin converter.

- You must ensure that the entire flue system is properly supported and connected.
- Ensure that any horizontal sections of pipe have a 1° fall towards the appliance (17mm per 1000mm).

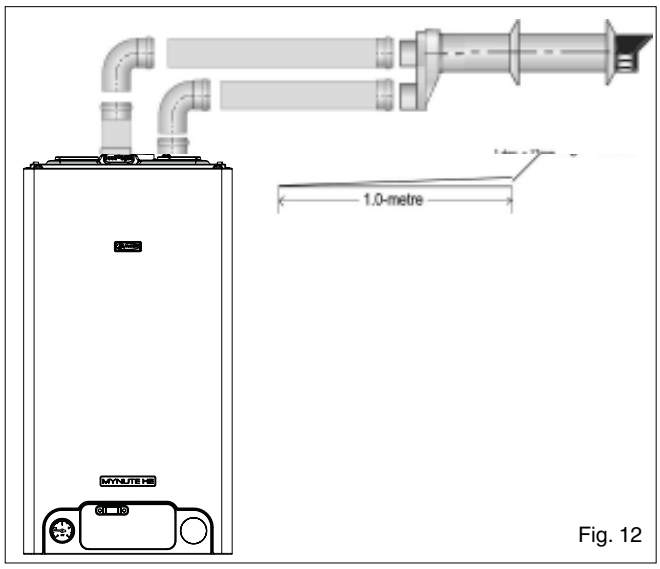

Fig. 12

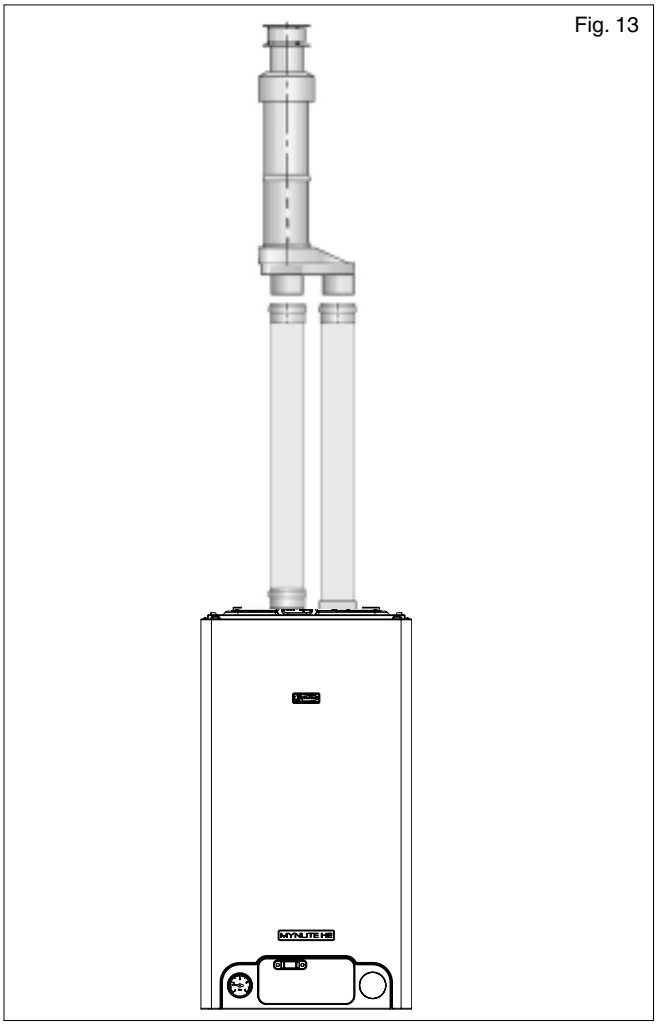
Fig. 13

4.6 CONNECTING THE GAS AND WATER

The appliance is supplied with service valves. The service valves are of the compression type. The accessories pack contains sealing washers etc, for use with the service valves.

When connecting pipe work to the valves, tighten the compression end first then insert the sealing washers before tightening the valve to the appliance.

NOTE

It will be necessary to hold the valve with one spanner whilst tightening with another.

4.6.1 GAS (fig. 6)

The appliance is supplied with a 15mm service valve, connect a 15mm pipe to the inlet of the valve and tighten both nuts.

NOTE

It will be necessary to calculate the diameter of the gas supply pipe to ensure the appliance has an adequate supply of gas.

4.6.2 FLOW & RETURN (fig. 6)

The appliance is supplied with 22mm service valves for the flow and return connections, connect a 22mm pipe to the inlet of each valve and tighten both nuts.

NOTE

Depending on system requirements, it may necessary to increase the size of the flow & return pipe work after the service valve connections.

4.6.3 SAFETY VALVE (fig. 6)

Connect the safety valve connection pipe to the safety valve outlet. Connect a discharge pipe to the other end of the safety valve connection pipe and tighten. The discharge pipe must have a continuous fall away from the appliance to outside and allow any water to drain away thereby eliminating the possibility of freezing. The discharge pipe must terminate in a position where any water – possibly boiling – discharges safely without causing damage or injury, but is still visible.

4.6.4 CONDENSE PIPE

During normal operation the boiler produces condense which is collected in a trap located in the lower part of the boiler. A flexible pipe (condense outlet pipe) is connected to the outlet of the trap. The flexible pipe must be connected to a plastic waste pipe only. The plastic waste pipe must have a minimum of a 3° fall towards the drain. Any external run of pipe should be insulated to prevent the risk of freezing.

CONNECTING THE CONDENSATE OUTLET

Gently pull the condense outlet pipe down from its location inside the boiler until approximately 100mm protrudes from the underside of the boiler. Connect a suitable plastic (not copper) pipe (no less than 20mm diameter) to the outlet pipe and ensure it discharges in accordance with building regulations or other rules in force.

4.7 ELECTRICAL CONNECTIONS

The electrical supply must be as specified in section 3/3A. A qualified electrician should connect the electrical supply to the appliance. If controls – external to the appliance – are required, a competent person must undertake the design of any external electrical circuits, please refer to section 8 for detailed instructions. ANY EXTERNAL CONTROL OR WIRING MUST BE SERVED FROM THE SAME ISOLATOR AS THAT OF THE APPLIANCE. The supply cable from the

isolator to the appliance must be 3-core flexible sized 0.75mm to BS 6500 or equivalent. Wiring to the appliance must be rated for operation in contact with surfaces up to 90ºC.

4.7.1 CASING REMOVAL (fig. 14)

To gain internal access to the appliance you must first remove the casing, proceed as outlined below:

- remove the 4 screws (**B**) located at the Left & Right of the underside of the casing
- lift the casing upward to disengage it from the top locating hooks and then remove
- store the casing and screws (**B**) safely until required. Re-fit in the reverse order.

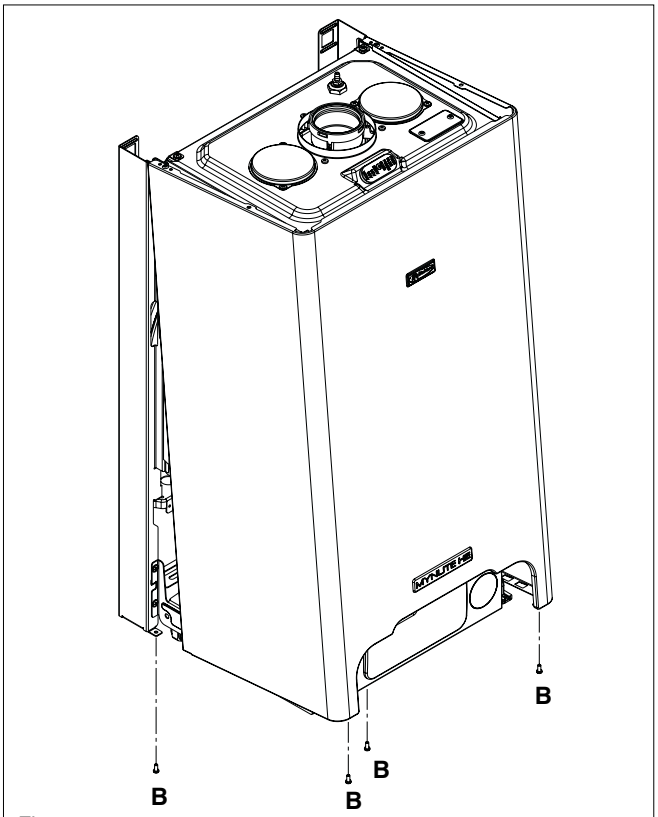

Fig. 14

4.7.2 APPLIANCE TERMINAL BLOCK

The appliance terminal block is located on the rear of the control fascia. Remove the casing as described in 4.7.1. Gently pull the control panel forwards and down. Locate the terminal block cover (see fig. 15).

NOTE

The appliance comes with a factory fitted link ('TA') to allow basic operation of the boiler via the mode selector switch. If it is anticipated that external controls will be required please refer to the wiring diagrams in section 8 for more detailed information.

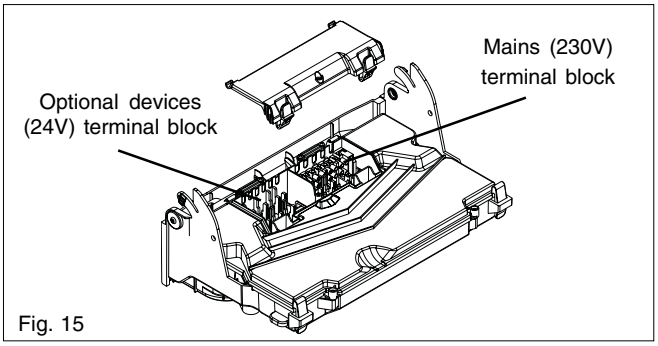

Fig. 15

4.7.3 CONNECTING THE MAINS (230V) INPUT (see fig. 16).

Unhook and remove the terminal block cover (230V). Pass the cable through the cable anchorage point.

Connect the supply cable wires (LIVE, NEUTRAL & EARTH) to their corresponding terminals (L, N & E) on the appliance - 230V - terminal block. When connecting the EARTH wire, ensure that it's left slightly longer (about 2cm) that the others, this will prevent strain on the EARTH wire should the cable become taut.

Do not remove the link wire unless additional external controls are to be fitted (see section 8). The securing screw on the cable anchorage should now be tightened. This must be done before the control fascia is re-fitted in the upright position. The appliance casing, screws and lower cover can now be re-fitted.

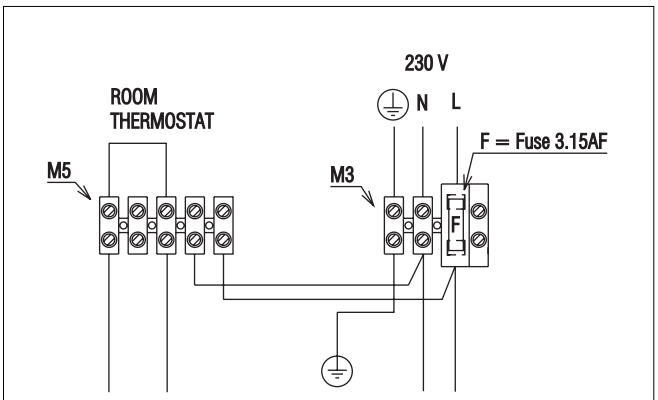

Fig. 16

5.1 GAS SUPPLY INSTALLATION

Inspect the entire installation including the gas meter, test for soundness and purge. Refer to BS 6891 (I.S. 813 in ROI) for specific instruction.

5.2 THE HEATING SYSTEM

The appliance contains components that may become damaged or rendered inoperable by oils and/or debris that are residual from the installation of the system, consequently it is essential that the system be flushed in accordance with the following instructions.

5.3 INITIAL FILLING OF THE SYSTEM

Ensure both flow and return service valves are open, remove appliance casing as described in 4.7.1, identify the automatic air release valves (AAV) and loosen the dust cap/s by turning the cap anti-clockwise one full turn.

Ensure all manual air release valves located on the heating system are closed. Connect the filling loop as shown in fig. 5, slowly proceed to fill the system by firstly opening the inlet valve connected to the flow pipe, and then turning the lever on the fill valve, to the open position. As water enters the system the pressure gauge will begin to rise. Once the gauge has reached 1 BAR close both valves and begin venting all manual air release valves, starting at the lowest first. It may be necessary to go back and top-up the pressure until the entire system has been filled. Inspect the system for water soundness, rectifying any leaks.

5.3.1 MANUAL AIR RELEASE (fig. 17)

When the boiler has been filled for the first time or the system has been drained and refilled, it will be necessary to release any air that may have become trapped within the appliance heat exchanger. Slacken the bleed screw until water is released and then close.

IMPORTANT, THERE ARE NO OTHER MANUAL AIR RELEASE VALVES LOCATED ON THE APPLIANCE.

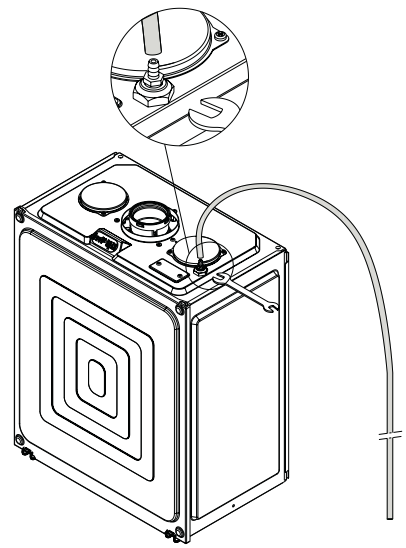

Fig. 17

5.4 INITIAL FLUSHING OF THE SYSTEM

The whole of the heating system must be flushed both cold and hot as detailed in 5.8. Open all radiator or heating valves and the appliance flow & return service valve. Drain the boiler and system from the lowest points. Open the drain valve full bore to remove any installation debris from the boiler prior to lighting. Refill the boiler and heating system as described in 5.3.

5.5 PRE-OPERATION CHECKS

Before attempting the initial lighting of the appliance, the following checks must be carried out:

- Ensure all gas service valves from the meter to the appliance are open and the supply pipe has been properly purged;
- Ensure the proper electrical checks have been carried out, (see 7.8) particularly continuity, polarity, and resistance to earth;
- Ensure the 3 AMP fuse – supplied with the appliance – has been fitted;
- Ensure the system has been filled, vented, and the pressure set to 1 BAR;
- Ensure the flue system has been fitted properly and in accordance with the instructions;
- Ensure all appliance service valves are open.

5.6 INITIAL LIGHTING

Ensure the electrical supply to the appliance is switched on. Ensure any external controls are switched to an 'ON' position and are calling for heat.

Move the selector switch to the ON position, the appliance will now operate as described in 1.2. Should the appliance fail to ignite, refer to 5.6 and/or section 7.

5.7 CHECKING GAS PRESSURE AND COMBUSTION ANALYSIS

The appliance is factory set and requires no additional adjustment once installed. However to satisfy the requirements of GSIUR 26/9 (I.S. 813 ROI), it will be necessary to gas rate the appliance using the gas meter that serves the appliance.

If the installation does not include a gas meter (for example LPG) and there are no means by which to calculate the gas rate, then a combustion analysis test must be carried out in accordance with BS 7967 (UK) to ensure the appliance is left working safely and correctly.

Additionally, if the gas valve has been adjusted, replaced, or the appliance has been converted for use with another gas type, then it becomes necessary to carry out a combustion analysis/check to ensure that correct combustion is occurring.

If there are no means to gas rate the appliance and/or carry out a combustion analysis check, then it will not be possible to complete the commissioning procedure.

Details on how to carry out the combustion analysis can be found in section 7.

IMPORTANT
It's imperative that a sufficient dynamic – gas – pressure is maintained at all times. Should the dynamic gas pressure fall below an acceptable level, the appliance may malfunction or sustain damage.

5.8 FINAL FLUSHING OF THE HEATING SYSTEM

The system shall be flushed in accordance with BS 7593 (I.S. 813 ROI). A cleanser - suitable for aluminium heat exchangers - should be used. It shall be from a reputable manufacturer and shall be administered in strict accordance with the manufacturers' instructions and the DWTA code of practice.

5.8.1 INHIBITORS

See Section 3 "General Requirements".

5.9 SETTING THE BOILER OPERATING TEMPERATURE

The flow outlet temperature can be adjusted between 40 °C - 80 °C for standard CH systems and between 20 °C - 45°C for under-floor CH systems (see par. 7.11) via the Heating thermostat knob (see fig.1).

5.10 SETTING THE SYSTEM DESIGN PRESSURE

The design pressure should be a minimum of 0.5 BAR and a maximum of 1.5 BAR. The actual reading should ideally be 1 BAR plus the equivalent height in metres (0.1 BAR = 1 metre) to the highest point in the system above the base of the appliance (up to the maximum of 1.5 BAR total). **N.B.** The safety valve is set to lift at 3 BAR/ 30 metres/45 psig. To lower the system pressure to the required value, drain off some water from the appliance drain valve until the required figure registers on the pressure gauge (see fig. 1).

5.11 REGULATING THE CENTRAL HEATING SYSTEM

Fully open all radiator and circuit valves and run the appliance for both heating and hot water until heated water is circulating. If conditions are warm remove any thermostatic heads. Adjust radiator return valves and any branch circuit return valves until the individual return temperatures are correct and are approximately equal.

5.12 FINAL CHECKS

- ENSURE ALL TEST NIPPLES ON THE APPLIANCE GAS VALVE ARE TIGHT AND CHECKED FOR SOUNDNESS.
- ENSURE THE APPLIANCE FLUE SYSTEM IS FITTED CORRECTLY AND IS PROPERLY SECURED.
- ENSURE ALL PIPE WORK IS RE-CHECKED FOR SOUNDNESS.
- RE-FIT APPLIANCE CASING.
- COMPLETE BENCHMARK CHECKLIST.

FOR UK ONLY
Complete details of the boiler, controls, installation and commissioning in the Benchmark checklist at the back of this book. It is important that the Benchmark checklist is correctly completed and handed to the user. Failure to install and commission the appliance to the manufacturers instructions may invalidate the warranty.

5.13 INSTRUCTING THE USER

Hand over all documentation supplied with this appliance – including these instructions – and explain the importance of keeping them in a safe place.
Explain to the user how to isolate the appliance from the gas, water and electricity supplies, and the locations of all drain points. Show the user how to operate the appliance and any associated controls correctly.
Show the user the location of the filling valve and how to top-up the system pressure correctly and show the location of all manual air release points.
Explain to the user how to turn off the appliance for both long and short periods and advise on the necessary precautions to prevent frost damage.
Explain to the user that for continued safe and efficient operation, the appliance must be serviced annually by a competent person.

IMPORTANT
To validate the appliance warranty, it's necessary to register the appliance details with us. The warranty can be registered in several ways:

- by completing the warranty registration card and posting to us using the pre-paid envelope supplied
- online at: vokera.co.uk
- for UK residents by calling: 0870 607 0281
- for ROI residents by calling: 1850 221121.

6.1 GENERAL

To ensure the continued safe and efficient operation of the appliance, it is recommended that it is checked and serviced at regular intervals. To ensure correct and safe operation of the appliance, it is essential that any worn or failed component be replaced only with a **genuine Vokera spare part**. It should be remembered that although certain generic components may look similar, they will be specific to an individual appliance or product range. Use of non-genuine Vokera spare parts could invalidate your warranty and may pose a potential safety hazard. The frequency of servicing will depend upon the particular installation conditions, but in general, once per year should be sufficient. It is the law that any servicing work is carried out by competent person such as a Vokera engineer, an approved service agent, British Gas, CORGI registered personnel or other suitably qualified personnel. The following instructions apply to the appliance and its controls, but it should be remembered that the central heating and the domestic hot water systems would also require attention from time to time.

6.2 ROUTINE ANNUAL SERVICING

- Check the operation of the appliance and ensure it functions as described in section 7.
- Compare the performance of the appliance with its design specification. The cause of any noticeable deterioration should be identified and rectified without delay.
- Thoroughly inspect the appliance for signs of damage or deterioration especially the flue system and the electrical apparatus.
- Check and adjust – if necessary – all burner pressure settings (see 7.4).
- Check and adjust – if necessary – the system design pressure (see 5.10).
- Carry out an analysis of the flue gases (see 7.5), and visually check the condition of the entire flue assembly.
- Compare the results with the appliance design specification. Any deterioration in performance must be identified and rectified without delay.
- Check that the burner and main heat exchanger are clean and free from any debris or obstruction.
- Check and clean – if necessary – the condense trap to ensure correct operation.

6.3 REPLACEMENT OF COMPONENTS

Although it is anticipated that this appliance will give years of reliable, trouble free service, the life span of components will be determined by factors such as operating conditions and usage. Should the appliance develop a fault, the fault finding section will assist in determining which component is malfunctioning.

6.4 COMPONENT REMOVAL PROCEDURE

To remove a component, access to the interior of the appliance is essential. Isolate the appliance from the electrical supply and remove the fuse. And when necessary, close all service valves on the appliance, remove the appliance casing as described in section 4.7.1 and drain the water content from the appliance via the drain valve. Ensure some water absorbent cloths are available to catch any residual water that may drip from the appliance or removed component. Undertake a complete commissioning check as detailed in section 5, after replacing any component.

ALWAYS TEST FOR GAS SOUNDNESS IF ANY GAS CARRYING COMPONENTS HAVE BEEN REMOVED OR DISTURBED.

6.4.1 AIR BOX FRONT COVER REMOVAL (fig. 18)

Locate the two clips and remove air box front cover. If it's necessary to remove the air box side cover, locate and remove the 4 securing screws.

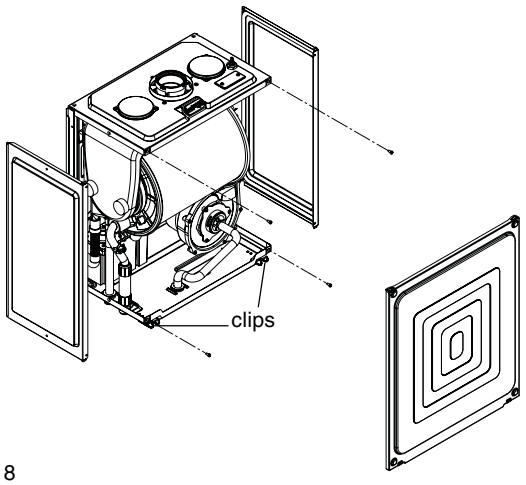

Fig. 18

6.5 PUMP ASSEMBLY (fig. 19)

Carry out component removal procedure as described in 6.4. Locate and remove the 2 securing screws **(A)** at the rear of the pump assembly. Disconnect the flow pipe **(B, only for 30-35HE)** from the combustion chamber connection, slacken the pipe at the hydraulic assembly and swing/rotate clear of the pump assembly.

Disconnect and remove the pump outlet pipe **(C)** from the pump assembly/combustion chamber connection. Remove the expansion pipe locking pin from the top of the pump assembly and withdraw the flexible pipe **(D)**. Locate and remove the pressure gauge securing pin (**D**) and disconnect the pressure gauge from the pump assembly.

Disconnect the electrical wiring from the pump's electrical connection point **(E)**. Remove locking pin **(F)** from pump base and lift pump assembly clear of the hydraulic manifold. The pump assembly can now be removed from the appliance. Replace carefully in the reverse order.

6.6 SAFETY VALVE (fig. 19)

Carry out component removal procedure as described in 6.4. Disconnect the outlet pipe from the safety valve, remove safety valve locking screw from the hydraulic manifold. Replace in the reverse order.

6.7 LOWER AUTOMATIC AIR RELEASE VALVE (fig. 19)

Carry out component removal procedure as described in 6.4. Remove the expansion pipe locking pin **(D)** from the pump assembly and remove the expansion pipe. Locate and remove the AAV locking pin **(G)** from the pump assembly and remove the AAV assembly **(H)**. Replace in the reverse order.

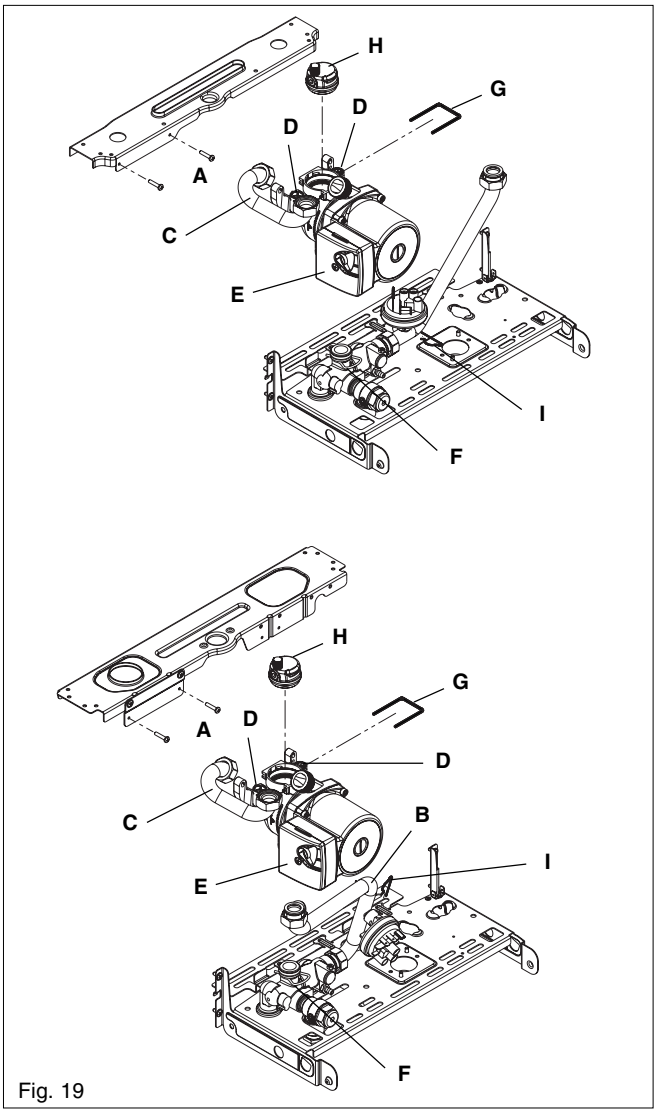

Fig. 19

6.7.1 TOP AUTOMATIC AIR RELEASE VALVE (fig. 20)

Carry out component removal procedure as described in 6.4.

Remove the drain pipe **(A)**. Unscrew the top AAV (**B**). Replace in the reverse order. Loctite or similar should be used as a thread sealant for the AAV.

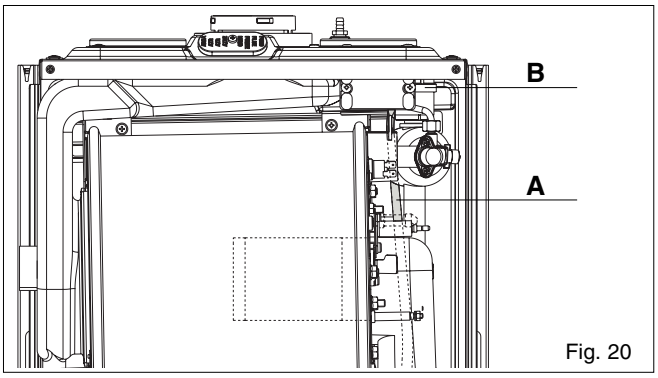

Fig. 20

6.8 WATER PRESSURE SWITCH (fig. 19)

Carry out component removal procedure as described in 6.4. Locate and remove the locking pin **(I)** from the water pressure switch. Remove the wiring. Carefully withdraw the switch. Replace in the reverse order.

6.9 PRIMARY THERMISTOR (fig. 1)

Carry out component removal procedure as described in 6.4. Unclip and remove the air chamber front cover. Unclip the primary thermistor from the flow outlet pipe. Disconnect thermistor electrical plug. Replace in the reverse order.

6.10 RETURN THERMISTOR (fig. 1)

Carry out component removal procedure as described in 6.4. Unclip and remove the air chamber front cover. Unclip the return thermistor from the return inlet pipe. Disconnect thermistor electrical plug. Replace in the reverse order.

6.11 PRINTED CIRCUIT BOARD (fig. 21)

Carry out component removal procedure as described in 6.4. Pull the control fascia forward and lower it. Push the clips **(A)** and remove cover, after carefully taking note of all wiring connections and jumper tag configuration; unhook and remove connection block (**B**). Disconnect all wiring from the PCB, locate and remove the PCB securing screws, remove the required PCB. Replace in the reverse order ensuring that the position of the 3 control knobs are correctly aligned with the respective potentiometers on the PCB.

Ensure that the correct jumper tag configuration has been respected. It will be necessary to check the functioning of the PCB is set for the correct boiler type/application.

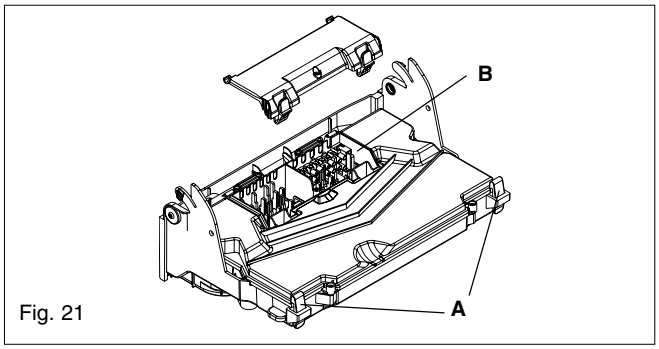

Fig. 21

6.12 GAS VALVE (fig. 22)

Carry out component removal procedure as described in 6.4. The gas valve must be changed as complete unit. Disconnect the electrical plug and leads from the gas valve, slacken and unscrew gas valve inlet and outlet connections. **Please note,** the sealing washers **(B)** must be discarded and replaced with new sealing washers. Disconnect the compensation pipe **(C)**. Locate and remove gas valve retaining screws **(D)** on the underside of the boiler if required, the gas valve can now be removed. Replace in the reverse order. Check and adjust burner pressure settings.

WARNING, A GAS SOUNDNESS CHECK MUST BE CARRIED OUT.

6.12.1 INJECTOR (fig. 22)

Carry out component removal procedure as described in 6.4. Unscrew and remove gas pipe connections **(A & E)**. Locate and remove the injector **(F)** inside the pipe. Replace in the reverse order. Check and adjust burner pressure settings. **WARNING, A GAS SOUNDNESS CHECK MUST BE CARRIED OUT.**

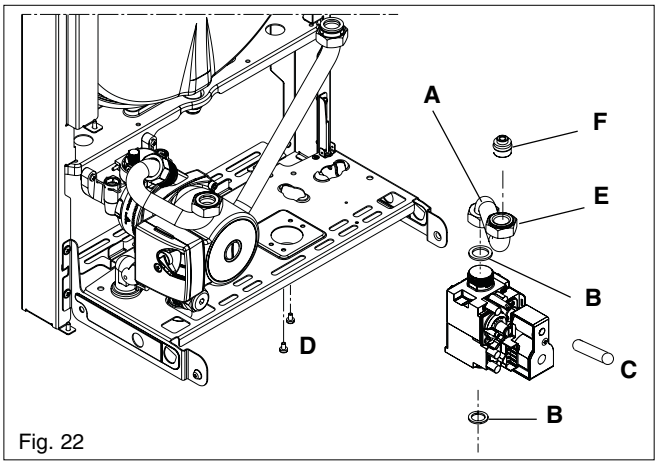

Fig. 22

6.13 ELECTRODES & CONDENSE SENSOR (fig. 23)

Carry out component removal procedure as described in 6.4. Unclip and remove the air chamber front and RH side covers. Disconnect the electrode leads and ancillary wiring from their respective connectors. Remove the retaining screws **(A)** for spark and sensing electrodes and remove. Remove the retaining nut **(C)** for condense sensor **(D)** and remove.

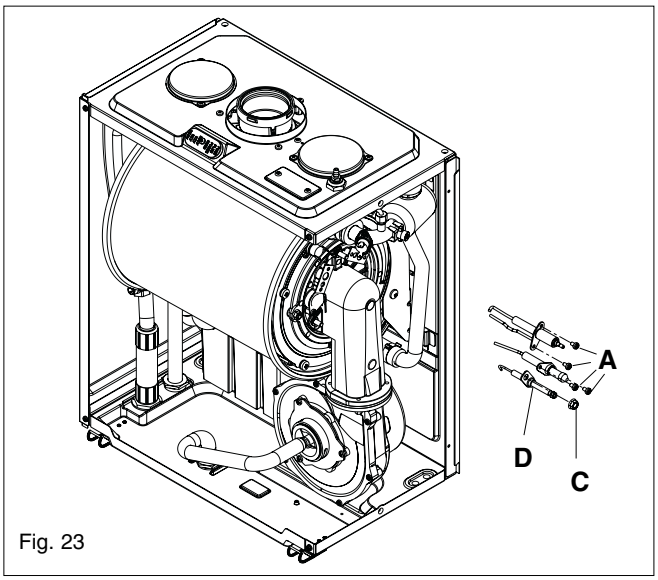

Fig. 23

6.14 FLUE FAN & MIXER (fig. 24)

Carry out component removal procedure as described in 6.4. Unclip and remove the air chamber front and the RH side covers. Slacken the gas pipe **(A)** at the air box connection and swing/rotate away from the fan assembly. To remove the mixer **(B)** locate and remove the three screws **(C)**. To remove the fan **(D)**, disconnect the electrical connections attached to the fan, locate and remove the four screws **(E)**. Gently ease the fan from its location.

Replace in the reverse order. Ensure all seals are in good condition, taking care to ensure they are replaced correctly.

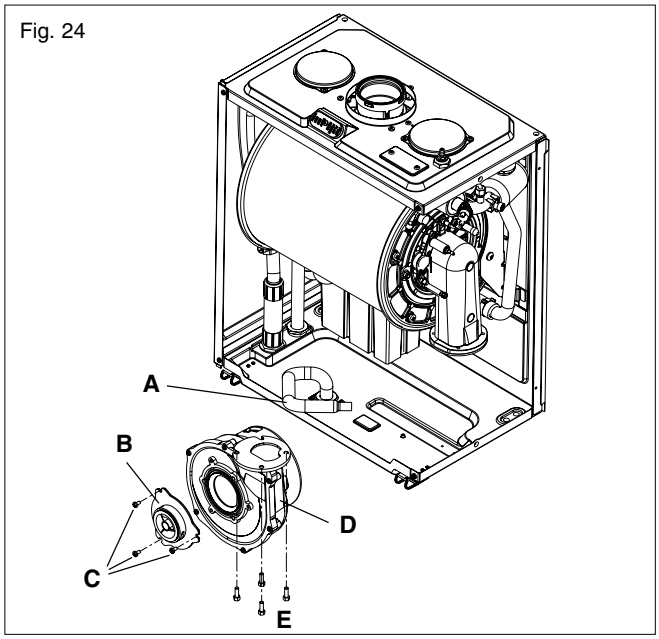

Fig. 24

6.15 BURNER (fig. 25)

Carry out component removal procedure as described in 6.4. Unclip and remove the air chamber front and the RH side covers. Slacken the gas pipe **(A)** at the air box connection and swing/rotate of the fan assembly. Locate and remove the 3 internal nuts **(B)** which secure the fan assembly in position **(C)** to the heat exchanger **(D)**. Disconnect the electrode leads and ancillary wiring from their respective connectors. Remove the retaining screws **(A, fig. 24)** for sensing electrode and remove. Remove the retaining nut **(C, fig. 24)** for condense sensor **(D, fig. 24)** and remove. Gently ease the fan assembly out of its location. Once the assembly has been removed, the burner **(E)** can be withdrawn from the heat engine. Ensure the seal **(F)** is in good condition, taking care to ensure it is replaced correctly. Replace in the reverse order.

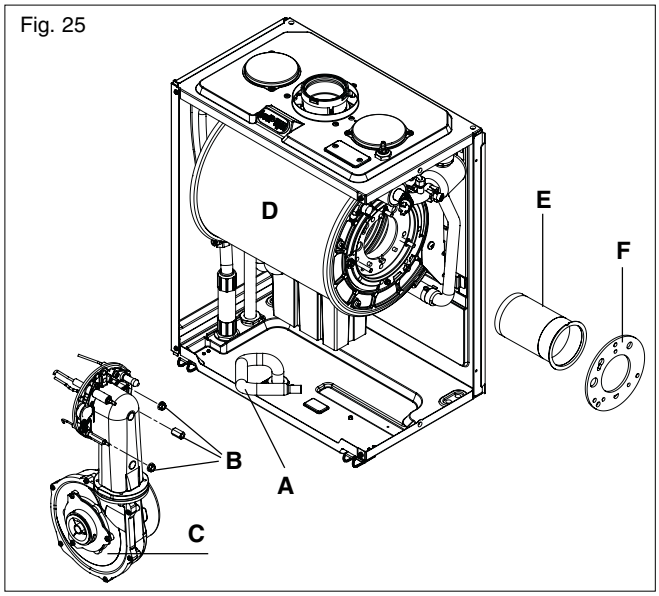

Fig. 25

6.16 MAIN HEAT EXCHANGER (fig. 26 & 27)

Carry out component removal procedure as described in 6.4. Unclip and remove the three air chamber covers (front, LH, RH sides). Disconnect all the wiring connections.

Fig. 26: Slacken the gas pipe **(A)** at the air box connection and swing/rotate of the fan assembly.

Disconnect the flow **(B)**, return **(C)** and condense connections on the heat exchanger. Locate and remove the 4-screws that secure the heat exchanger to the combustion chamber **(D)**. Move the heat exchanger to the right and disconnect it from the flue collector **(E)**. The heat exchanger can now be lifted up and withdrawn from the appliance.

Fig. 26

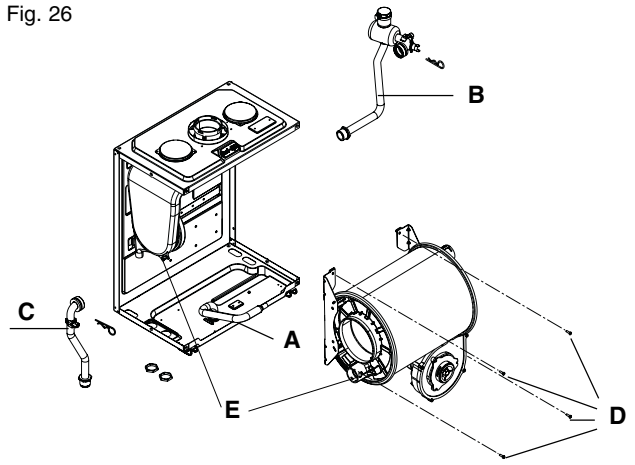

Fig. 27: To remove the fan burner assembly **(A)** locate and remove the 3 external nuts **(B)**. Replace in the reverse order. Ensure all seals are in good condition, taking care to ensure they are replaced correctly.

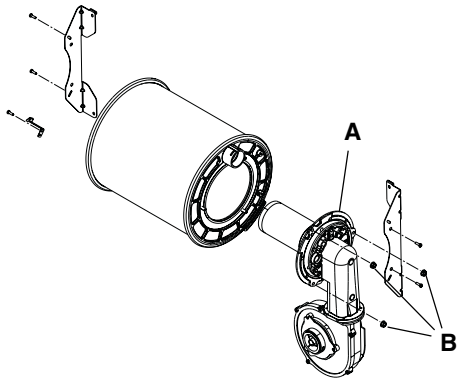

Fig. 27

6.17 AUTOMATIC BY-PASS (fig. 28)

Carry out component removal procedure as described in 6.4.

Disconnect and remove the flow pipe at the heating manifold **(1)** and at the connection to the air chamber. Using a hooked piece of wire, carefully withdraw the bypass cartridge **(2)**.

Ensure all seals are in good condition, taking care to ensure they are replaced correctly. Replace in the reverse order ensuring the cartridge is facing the correct way.

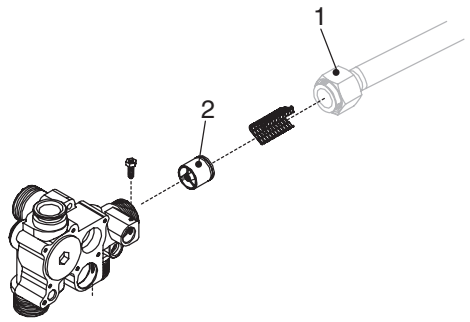

Fig. 28

6.18 EXPANSION VESSEL (fig. 1)

Should the removal and replacement of the expansion vessel be deemed impractical, an external expansion vessel may be fitted to the return pipe as close to the appliance as possible.

6.18.1 EXPANSION VESSEL REMOVAL (with sufficient clearance above, fig. 29)

Carry out component removal procedure as described in 6.4. Disconnect the flue from the appliance.

Disconnect the flexible expansion pipe from the vessel. Unscrew the nut that secures the vessel to the lower frame. Locate and remove the screws **(A)** that secure the vessel top holding plate **(B)**, remove the plate. The expansion vessel can now be removed. Replace in the reverse order. Ensure all seals are in good condition, taking care to ensure they are replaced correctly.

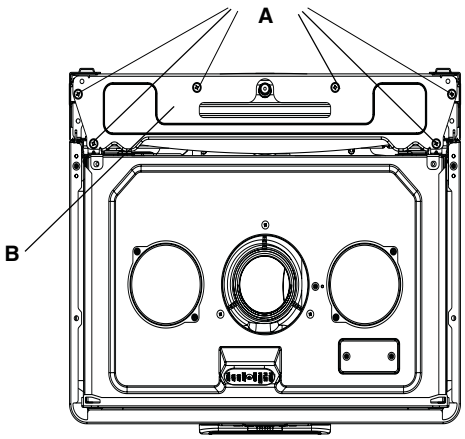

Fig. 29

6.19 CONDENSE TRAP REMOVAL (fig. 30)

Carry out component removal procedure as described in 6.4. Disconnect the 2 upper rubbers condense pipe **(A)**. Remove the pin **(B)** that secures the trap to the air box plate. Disconnect the lower rubber condense pipe **(C)** from the condense trap. Carefully remove the condense trap. Replace in the reverse order.

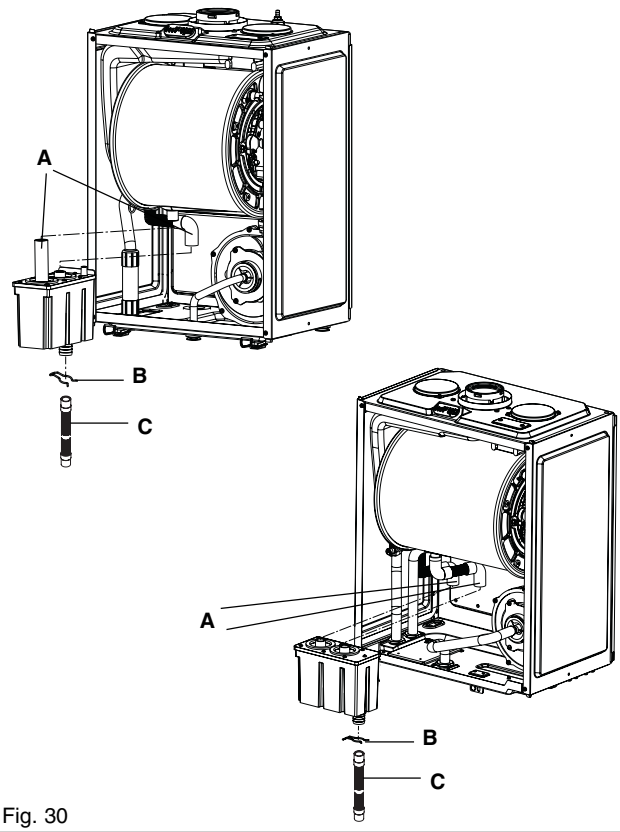

Fig. 30

6.20 FLUE COLLECTOR REMOVAL (fig. 31)

Carry out component removal procedure as described in 6.4. Unclip and remove the air chamber front and left side covers. Locate and remove the screw **(A)** that secures the flue gas analysis test point cover **(B)**. Gently pull down and to the left and ease the flue collector from its location. Replace in the reverse order.

Fig. 31

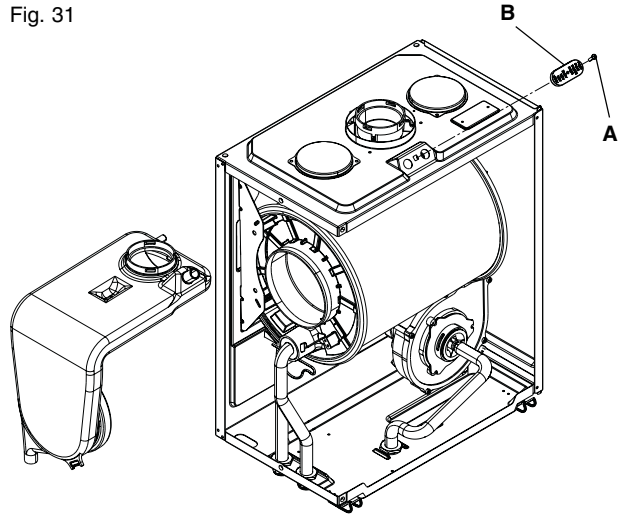

SECTION 7 CHECKS, ADJUSTMENTS AND FAULT FINDING

7.1 CHECKING APPLIANCE OPERATION

When carrying out any repairs or servicing to the appliance, the relevant commissioning procedure must be undertaken to ensure the continued safe operation of the appliance. Particular attention should be made to ensure gas soundness, water soundness, and the electrical integrity of the appliance.

7.2 APPLIANCE MODES OF OPERATION

NOTE

There must be sufficient system water pressure (min. 0.5 bar) to ensure the water pressure switch is activated. If there is insufficient system pressure the pump and fan will be prevented from operating and the low-pressure fault code will be displayed.

The 2-digit display can show several different modes of operation:

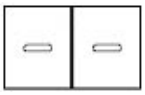

OFF mode

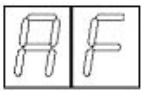

Frost protection mode active

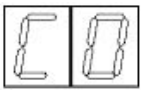

Combustion analysis mode active

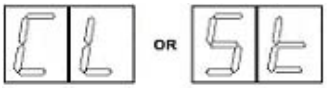

Autostop function active

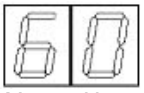

Normal heating request (example 60°C).

7.2.1 SELECTOR SWITCH IN THE OFF/STANDBY POSITION

When the selector switch is in the OFF/STANDBY position, the following functions are active.

Active functions:

- Frost-protection system
- Pump anti-block

7.2.1 ON-BOARD FUNCTIONS

- **THERMOREGULATION:** when an external sensor is connected to the appliance, the electronic circuitry will automatically adjust the flow outlet temperature to suit local weather conditions in order to maintain comfort and efficiency. A specific operating curve that is most suited to the system type and geographical area can also be selected.
- **OPENTHERM +:** OT+ is a communication protocol that enables the boiler to be linked or connected to other OT+ controls. These controls have been designed to further increase fuel economy by ensuring the boiler remains in the modulation phase during any heating requests. This reduces the amount of ON/OFF periods and therefore increases fuel efficiency.
- **AUTOSTOP:** further information on the AUTO-STOP function, can be obtained from your local Vokera Sales Representative.
- **CO FUNCTION:** the CO function when activated, will allow the appliance to run at maximum and minimum output whilst a combustion analysis check is being carried out. Whilst the CO function is active, all other functions are disabled (minimum power operating period, anti-cycle, set-point, etc). Once enabled, the CO function will remain active for a 15-minute period, or until the function is manually deactivated
- **FROST-PROTECTION:** this function is only active when there are no requests for heating or HW. If the temperature drops below 6°C, the boiler will operate on minimum power until the temperature of the primary thermistor reaches 35°C. Thereafter the pump & fan will over-run for 30-seconds.
- **ANTI-CYCLE FUNCTION:** the anti-cycle function ensures the burner remains switched off for at least 3-minutes after the set-point hysterisis (set-point + 5-deg).
- **PUMP ANTI-BLOCK FUNCTION:** when there has been no heating or HW request for 24-hours, the anti-block cycle is activated. The pump will be activated for a period of 30-seconds.

7.2.5 HEATING MODE

With the selector switch in the ON position and any additional controls (time clock, programmer, room thermostat, etc,) calling for heat, the appliance will operate in the heating mode. The pump and fan will be activated via the flow temperature sensor. When the fan is sensed to be operating correctly (tacho signal), the ignition sequence commences. Ignition is sensed by the electronic circuitry to ensure flame stability at the burner. Once successful ignition has been achieved, the electronic circuitry increases the gas rate to 75% of the MAX Heating (set by the corresponding HTG trimmer) for a period of 15 minutes. The speed of the fan and therefore the output of the boiler is determined by the temperature of the water sensed by the flow temperature sensor, consequently a high temperature at the flow sensor results in a lower fan speed. As the water temperature increases, the temperature sensors – located on the flow pipe of the boiler – reduce the fan speed via the electronic circuitry. Depending on the load, either the water temperature will continue to rise until the set point is achieved or the water temperature will fall whereby fan speed will increase relative to the output required. When the boiler has reached the set point (+ hysterisis), the burner will switch off. The built-in anti-cycle device prevents the burner from re-lighting for approximately 3-minutes. When the temperature of the flow sensor falls below the set point (- hysterisis), the burner will re-light.

NOTE

If the spark/sensing electrode does not sense ignition the appliance will re-attempt ignition a further 4-times then go to lockout. When the set-point has been reached (the position of the heating temperature selector) as measured at the primary thermistor, the appliance will begin the modulation phase whereby the fan and gas valve will continuously modulate to maintain the set-point. If the temperature continues to rise and exceeds the set-point by 5°C (hysterisis), the burner will shut down. A new ignition sequence will be enabled when the 3- minute anti-cycle has been performed and the temperature at the primary thermistor has dropped 5°C (hysterisis) below the set-point.

NOTES

When the request for heating and/or hot water has been satisfied, the appliance pump and fan may continue to circulate to dissipate any residual heat within the appliance.

7.3 APPLIANCE FAN SPEEDS

The appliance fan speeds require to be checked and/or adjusted prior to making any adjustments to the gas valve or if the main PCB has been replaced.

ATTENTION

Gas type and appliance fan speed (output) **must be set** according to the specific appliance specification. Vokera accepts no responsibility if the gas type and/or fan speed is not correctly adjusted according to the respective appliance specification as detailed on the appliance data badge.

7.3.1 CHECKING/ADJUSTING THE APPLIANCE FAN SPEEDS

Move the selector switch to the OFF position and remove the 3-selector knobs.

7.3.2 ABSOLUTE MAX FAN SPEED

Locate the MAX trimmer (fig. 32) and gently adjust clockwise or counter clockwise to achieve the correct fan speed (see table 7.3.6).

NOTE

The display shows the fan RPM in multiples of 1000, i.e. 2.5 = 2500RPM.

7.3.3 ABSOLUTE MIN FAN SPEED

Locate the MIN trimmer (fig. 32) and gently adjust clockwise or counter clockwise to achieve the correct fan speed (see table 7.3.6).

NOTE

The display shows the fan RPM in multiples of 1000, i.e. 2.5 = 2500RPM.

7.3.4 IGNITION FAN SPEED

ATTENTION

Do this operation only after the adjusting of absolute max and min fan speed.

Locate the IGN trimmer (fig. 32) and gently adjust clockwise or counter clockwise to achieve the correct fan speed (see table 7.3.6).

NOTE

The display shows the fan RPM in multiples of 1000, i.e. 2.5 = 2500RPM.

7.3.5 HEATING FAN SPEED

Locate the HTG trimmer (fig. 32) and gently adjust clockwise or counter clockwise to achieve the correct fan speed (see table 7.3.6). speed (see table 7.3.6).

NOTE

The display shows the fan RPM in multiples of 1000, i.e. 2.5 = 2500RPM.

Fig. 32

7.3.6 FAN SPEED TABLE

Use the following table to set the corresponding fan speeds that are relative to the appliance you are working on.

FAN SPEED (rpm) TABLE

MODEL	MAX	MIN	HTG	IGN
12HE	3.700	1.300	3.500	3.700
15HE	4.200	1.300	4.200	3.700
20HE	5.400	1.700	5.400	3.700
25HE	5.500	1.700	5.500	3.700
30HE	5.200	1.400	5.200	3.700
35HE	6.000	1.400	6.000	3.700

7.4 CHECKING THE CO2 AND ADJUSTING THE GAS VALVE

THE GAS VALVE MUST BE SET-UP OR ADJUSTED WITH THE AID OF A PROPERLY CALIBRATED FLUE GAS ANALYSER.

Isolate the appliance from the electrical supply and remove the appliance casing as described in 4.7.1. Set the flue gas analyser to read CO2 and insert the probe into the flue analysis test point (**A, B** fig. 31). Restore the electrical supply to the boiler and switch the boiler to the OFF mode. To adjust the gas valve you must first ensure that the fan speed potentiometers (trimmers) have been set correctly (see 7.3).

Remove the 3-selector knobs, locate and press the CO button (see fig. 32). The appliance will now operate in CO mode for approximately 15-minutes (see 7.10).

7.4.1 GAS VALVE MAXIMUM SETTING

Locate and gently turn the HTG trimmer till the maximum value (fan speed) is obtained and check that it corresponds with the appropriate CO2 value (Maximum) for the respective appliance. If the CO2 reading is correct, proceed to gas valve minimum setting (7.4.2). However, if the CO2 reading is incorrect, the maximum gas pressure must be adjusted as follows:

- Using a suitable screwdriver, very slowly turn the maximum adjustment screw (see fig. 33) – clockwise to decrease, counter clockwise to increase – until the correct value is displayed on the CO2 analyser (allow time for the analyser to stabilise).

7.4.2 GAS VALVE MINIMUM SETTING

Locate and gently turn the HTG trimmer till the minimum value (fan speed) is obtained and check that it corresponds with the appropriate CO2 value (Minimum) for the respective appliance. If the CO2 reading is correct, rotate the HTG trimmer until the correct value is obtained for the respective appliance (see fan speed table) and proceed to 7.4.3.

However, if the CO2 reading is incorrect, the minimum gas pressure must be adjusted as follows:

- Using a suitable screwdriver, very slowly turn the minimum adjustment screw (see fig. 33) – clockwise to increase, counter clockwise to decrease - until the correct value is displayed on the CO2 analyser (allow time for the analyser to stabilise).

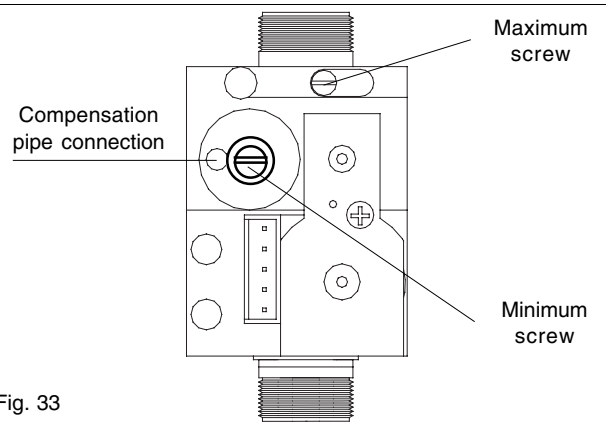

Fig. 33

7.4.3 COMPLETION

On completion of the combustion analysis check and/or any gas valve adjustment, set the HTG trimmer to the corresponding value as detailed in the fan speed table. Refit the 3-selector knobs and move the mode selector to the OFF position. Remove the test probe from the test point and refit the sealing screw/s and/or cap.

IMPORTANT

A GAS SOUNDNESS CHECK MUST BE CARRIED OUT IF ANY GAS CARRYING COMPONENTS HAVE BEEN REMOVED, REPLACED, OR DISTURBED.

7.5 COMBUSTION ANALYSIS TEST

A combustion analysis check can easily be carried out on the appliance via the test points located on the top of the appliance (see 7.4).

- Insert the flue gas analyser probe into the flue gas test point (see fig. 31).
- Operate the boiler in CO mode and compare the values with those shown in section 2 (Nat. Gas) or section 10 (LPG). If different adjust the gas valve according to 7.4.1, 7.4.2, & 7.4.3.

7.6 CHECKING THE EXPANSION VESSEL

Carry out the component removal procedure as described in 6.4. You must ensure that the boiler is completely drained of water. Using a suitable pressure gauge, remove dust cap on expansion vessel and check the charge pressure. The correct charge pressure should be 1.0 bar ± 0.1 bar. If the charge pressure is less, use a suitable pump to increase the charge.

NOTE

You must ensure the drain valve is in the open position whilst re-charging takes place. Replace the dust cap and carry out the relevant commissioning procedure (section 5).

7.7 EXTERNAL FAULTS

Before carrying out any faultfinding or component replacement, ensure the fault is not attributable to any aspect of the installation.

7.7.1 INSTALLATION FAULTS

Symptom	Possible cause
No display/ignition	Check wiring/check electrical supply
No hot water	Check external controls
No heating	Check external controls

Fault code	Possible cause
10	Check gas supply, check flue system, check polarity

7.8 ELECTRICAL CHECKS

Any electrical checks must be carried out by a suitably qualified person.

7.8.1 EARTH CONTINUITY TEST

Isolate the appliance from the electrical supply, and using a suitable multi-meter carry out a resistance test. Connect test leads between an appliance earth point and the earth wire of the appliance supply cable. The resistance should be less than 1 OHM. If the resistance is greater than 1 OHM check all earth wires and connectors for continuity and integrity.

7.8.2 SHORT CIRCUIT CHECK

Isolate the appliance from the electrical supply, and using a suitable multi-meter, carry out a short circuit test between the Live & Neutral connections at the appliance terminal strip (fig.16). Repeat above test on the Live & Earth connections at the appliance terminal strip (fig.16).

NOTE

Should it be found that the fuse has failed but no fault is indicated, a detailed continuity check will be required to trace the fault. A visual inspection of components may also assist in locating the fault.

7.8.3 POLARITY CHECK

With the appliance connected to the electrical supply and using a suitable multimeter, carry out the following voltage tests:

- Connect test leads between the Live & Neutral connections at the appliance terminal strip (fig.16). The meter should read approximately 230V ac. If so proceed to next stage. If not, see 7.8.4.
- Connect test leads between the Live & Earth connections at the appliance terminal strip (fig.16). The meter should read approximately 230V ac. If so proceed to next stage. If not, see 7.8.4.
- Connect test leads between the Neutral & Earth connections at the appliance terminal strip (fig.16). The meter should read approximately 0 – 15Vac. If so polarity is correct. If not, see 7.8.4.

7.8.4 REVERSED POLARITY OR SUPPLY FAULT

Repeat the above tests at the appliance isolator, if testing reveals correct polarity and/or supply at the isolator, re-check wiring and connections between the isolator and the appliance. If tests on the isolator also reveal reversed polarity or a supply fault, consult the local electricity supplier for advice.

7.8.5 RESISTANCE TO EARTH CHECK

Isolate the appliance from the electrical supply, and using a suitable multi-meter carry out a resistance test. Connect test leads between the Live & Earth connections at the appliance terminal strip (fig. 16). If the meter reads other than infinity there is a fault that must be isolated, carry out a detailed continuity check to identify the location of the fault.

These series of checks must be carried out before attempting any faultfinding procedures on the appliance. On completion of any task that required the disconnection and re-connection of any electrical wiring or component, these checks must be repeated.

7.9 FAULT FINDING

Before attempting any faultfinding, the electrical checks as detailed in 7.8 must be carried out. Isolate the appliance from the electrical supply.

Disconnect any external controls from terminal plug M5 (fig. 16), and insert a link-wire between the two wires at the 'TA' connections (fig. 16).

NOTE

Restore the electrical supply to the boiler and turn the selector switch to the on position. The boiler should now function as described in section 7.2. Should the boiler fail to respond, the internal fuses and connectors should be checked to ensure integrity and continuity. If the boiler still fails to respond, refer to the detailed faultfinding flowcharts located at the end of this section.

7.10 COMPONENT VALUES & CHARACTERISTICS

COMPONENT	VALUE
Fan	230Vac
Pump	230Vac
Valve actuator (Combi only)	230Vac
Ignition transformer	230Vac
Gas valve	230Vac
Room thermostat connection	230Vac
NTC thermistor (dry contact)	10Kohm
NTC thermistor (wet contact)	10Kohm
FUNCTION	**VALUE**
Standard Heating Range (°C)	40 – 80
Floor Heating Range (°C)	20 – 45
CH limited power at 75%	15 Min
Heating OFF hysterisis (°C)	SP + 5
Heating ON hysterisis (°C)	SP – 5
Anti-cycle delay	3-min
Pump over-run	30-sec
Low output (min. output + %)	Min+25
CO function max temp. (°C)	95
CO re-light temp. (°C)	75
CO function time	15-min
Flow NTC max temp. (°C)	95
High limit thermostat (°C)	105
Burner thermostat (°C)	170
Maximum differential (°C)	35
IGNITION CONTROL	**VALUE**
Ignition attempts before L/O (lockout).	5
Re-ignition attempts after loss of flame signal	5

7.11 BOILER CONFIGURATION

The boiler can be configured by means of the JUMPER Tag which configuration is shown in the below:

JP4 CONFIGURATION

- JUMPER ON POSITION 1: FLOOR HEATING (IF SET) / STANDARD HEATING (IF NOT USED)
- JUMPER ON POSITION 2: (UNUSED)
- JUMPER ON POSITION 3: (UNUSED)
- JUMPER ON POSITION 4: (UNUSED)
- JUMPER ON POSITION 5: (UNUSED)
- JUMPER ON POSITION 6: CH HEATING ONLY.

FOR CONFIGURATION SEE REFERENCE NUMBER (PIN1 ON PCB) AS SHOWN IN BELOW.

JP4

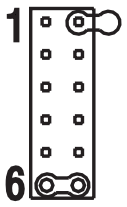

7.12 FAULT CODES

When the boiler detects a temporary fault condition, the appropriate code is shown flashing on the display. If/when the fault code is final, the pump will perform a 60-second post circulation and the red LED will be illuminated.

CODE	CAUSE	ALARM TYPE	ACTION
AL10	Ignition failure/not flame sensed, condense sensor activated	Final	Reset, check appliance operation
AL20	Limit thermostat fault	Final	Reset, check appliance operation
AL21	External device fault (UHT/CPA)	Final	Reset, check appliance
AL26	Return temperature too high	Final	Reset, check pump, ensure there is sufficient flow sensor temperature). circulation around heating circuit/s
AL28	Temperature differential inverted (return sensor temperature higher than flowsensor temperature)	Final	Reset, check pump, ensure there is sufficient circulation around heating circuit/s thermistors
AL34	Fan tacho signal fault	Final	Reset check appliance operation, check fan
AL40	Insufficient system water pressure	Final	Check/refill system pressure, reset, check appliance operation
AL41	Insufficient system water pressure	Temporary	Check/refill system pressure, check appliance operation
AL52	Internal fault	Final	Reset, check appliance operation
AL55	Jumper tag fault	Final	Check jumper tag configuration
AL60	Jumper tag fault	Temporary	Check jumper tag configuration
AL71	Primary (flow) thermistor fault	Temporary	Check primary thermistor, check wiring
AL73	Return thermistor fault	Temporary	Check return thermistor, check /wiring
AL74	Variation on temperature of primary and/or return too high	Final	Reset, check appliance operation, check pump, ensure there is sufficient circulation around heating circuit/s
AL79	Flow temperature too high, or temperature differential between primary and return too high	Final	Reset, check appliance operation, check thermistors

8.1 EXTERNAL WIRING

The appliance comes with a factory fitted (TA) link to allow basic operation of the boiler via the mode selector switch. If external controls are to be added to the system, they must be connected to the appliance as shown in the following diagrams. For advice on controls that are not featured in this book, please contact Vokera technical on 0870 333 0520.

8.1.1 EXTERNAL WIRING LIMITATIONS

Any external wiring must remain within the limits as detailed in the table below

CONNECTION	MAX. LENGTH
External sensor	30-metres
Room thermostat	30-metres
OT+ connection	30-metres

8.2 TYPICAL CONTROL APPLICATIONS

The appliance can be used with the following controls:

- single-channel, voltage-free time clocks (fig. 34a)
- programmable room thermostats (fig. 34b)
- twin-channel programmers (figs 39 & 40). The appliance can be used in conjunction with typical 'S'-Plan/'Y'-Plan systems (see 8.4.1 & 8.4.2), please contact Vokera technical should you require further detailed instruction.

8.3 OTHER DEVICES

Although it's permissible to use/connect certain OT+ (Opentherm Plus) controls or the Vokera external sensor, you should ensure that these controls do not inhibit or limit the response to any heat request from a DHW cylinder.

Contact the controls manufacturer and/or Vokera technical department should you require more specific information on the suitability of a particular control. Further guidance on the recommended practice for the installation of external controls, can be found in CHeSS – HC5/HC6 (www.energyefficiency.gov.uk).

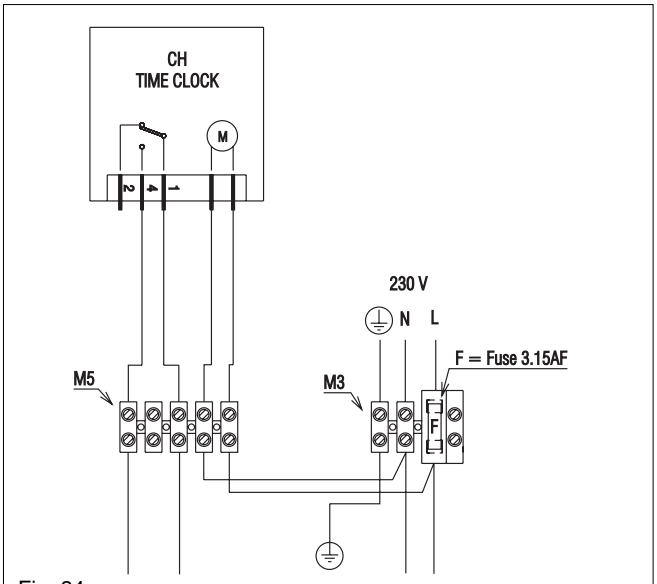

Fig. 34a

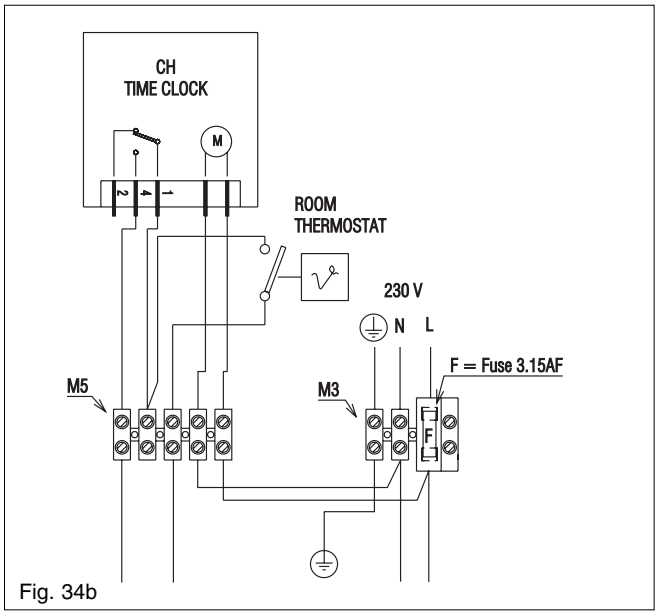

Fig. 34b

OPTIONAL DEVICE (24V) TERMINAL BLOCK

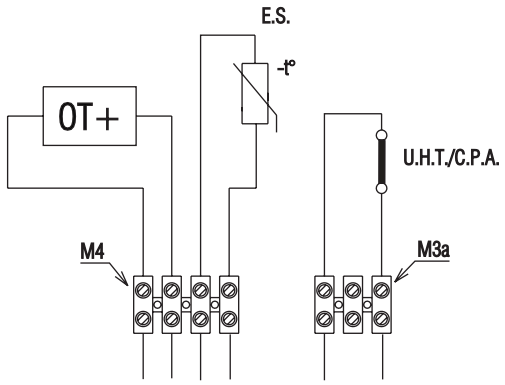

U.H.T. = underfloor heating thermostat
C.P.A.= condensate pump alarm
E.S.= external sensor
OT+= opentherm + connection

Fig. 35

8.4 VOKERA TWIN-CHANNEL PROGRAMMER (code 514)

The Vokera 2-channel programmer kit (product code 514) has been developed specifically for the Mynute HE range and eliminates the need for an external programmer.

The kit is comprised of the following:

- 2-channel programmer
- 24V wiring harness
- 230V wiring harness & terminal strip
- instructions.

Isolate the appliance from the electrical supply; unhook and remove the control PCB cover. Remove the clock blanking disc from the clock aperture on the boiler. Secure the programmer to the clock aperture using the screws previously removed.

Fig. 36

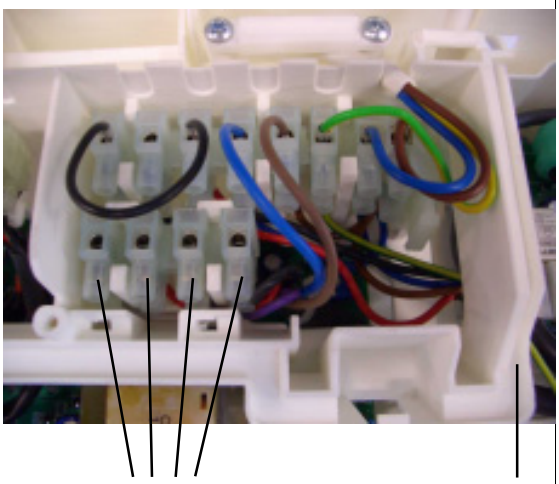

Fig. 37

Unhook and lift the connection casing; connect the end of the 24V harness to the 24V connection on the main PCB (A1, see fig. 38).

Unhook and remove the cover of connection casing. Passing under connection casing insert the four terminal strip (M4) and the 230V wiring harness in the opening. Position the four terminal strip in the own seat (see photos 36 & 37) and connect the 230 wiring harness as indicated in the figs 39 & 40.

The programmer can be used with a typical 'S' – Plan or 'Y' – Plan controls arrangement as detailed in figures 39 & 40.

IMPORTANT

- The boiler must always be supplied with a permanent 230V electrical supply.
- Always remove the link between TA & TA on the appliance 230V terminal strip whenever additional controls are connected to the appliance.
- Do not connect any controls or auxiliary equipment to the 24V terminal strip, other than that approved/supplied by Vokera Ltd.

FUNCTIONAL DIAGRAM

Fig. 38

NOTE. L-N-E CONNECTION MUST NOT BE INTERCHANGED
CONTROL SWITCHING OF TIME CLOCK AND ROOM THERMOSTAT RATED IS 230 V.a.c.

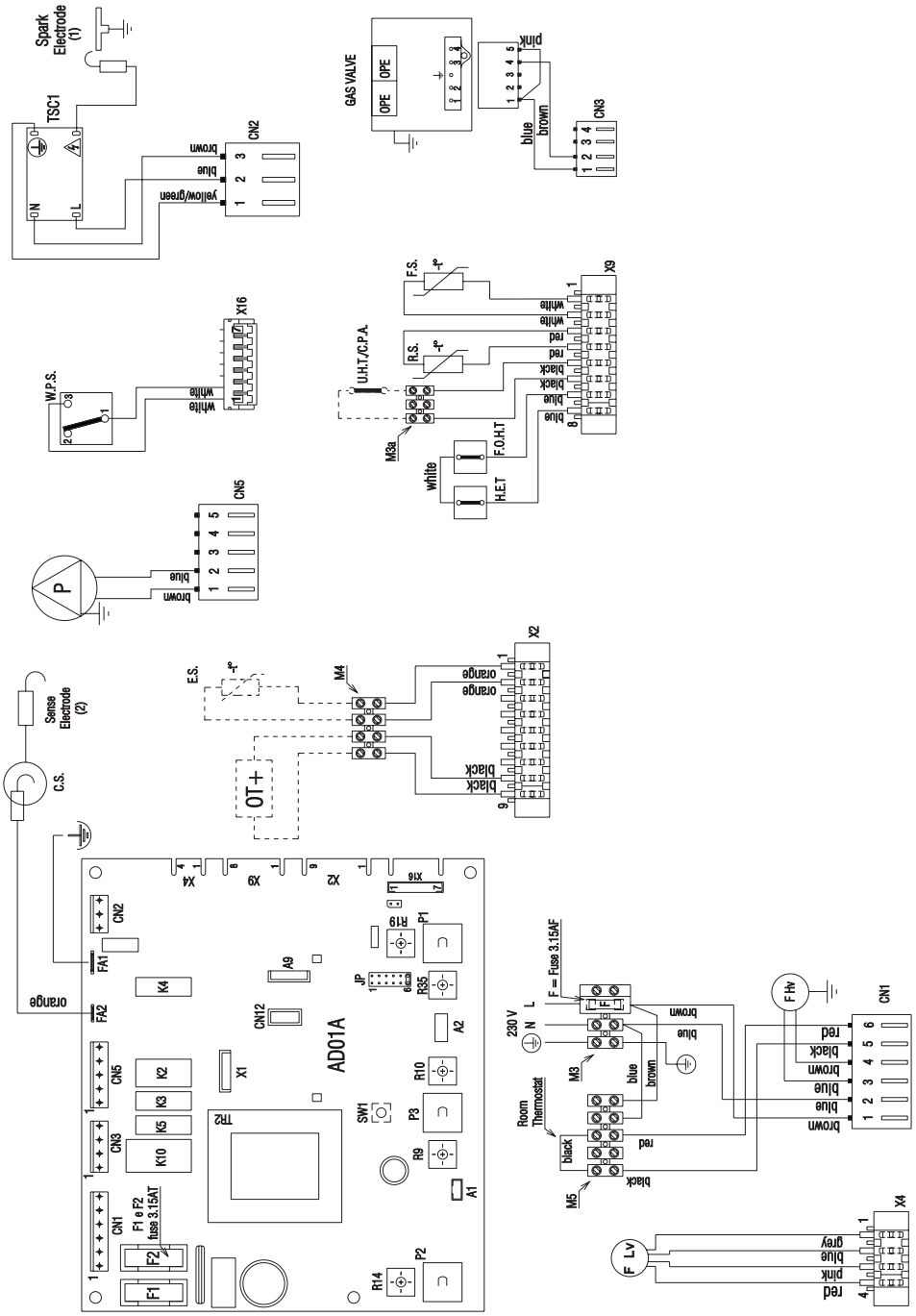

Key

F Hv	Fan power supply 230 V	**H.E.T.**	Heat exchanger thermostat
F Lv	Fan signal control	**M3-M5**	Terminal strip for supply in/clock/room thermostat
P	Pump	**M3a-M4**	Terminal strip for esternal sensor/condense pump / low temperature thermostat
F	Fuse 3.15A F (fast)		
F1-F2	Fuse 3.15A T (delay)	**OT+**	Open therm + connection
OPE	Gas valve solenoids	**JP6**	For system open vent boilers
S.E. (1)	Spark electrode	**X1**	Connector minitank (unused)
S.E. (2)	Sense electrode	**CN12**	Service connector
C.S.	Condensate sensor	**SW1**	Co button
G.V.	Gas valve	**A1**	24V output to 2CH - programmer
TSC1	Ignition transformer	**P1**	DHW potentiometer (unused)
TR2	PCB transformer	**P2**	Heating potentiometer
E.S.	External sensor	**P3**	Selector switch
WPS	Water pressure switch	**R9**	Trimmer for maximum output
FS	Flow thermistor (NTC)	**R10**	Trimmer for minimum output
RS	Return thermistor (NTC)	**R14**	Trimmer for ignition fan speed
AD01A	Main PCB	**R19**	Trimmer for heating fan speed
CN1÷CN5	Connection to PCB 230V	**R35**	Trimmer thermoregulation
X2÷X16	Connection to PCB 24V	**UHT**	Underfloor heating thermostat
F.O.H.T.	Flow over heat thermostat	**CPA**	Condensate pump alarm

Fig. 39

8.4.1. "S" - Plan with Vokera 2-channel programmer

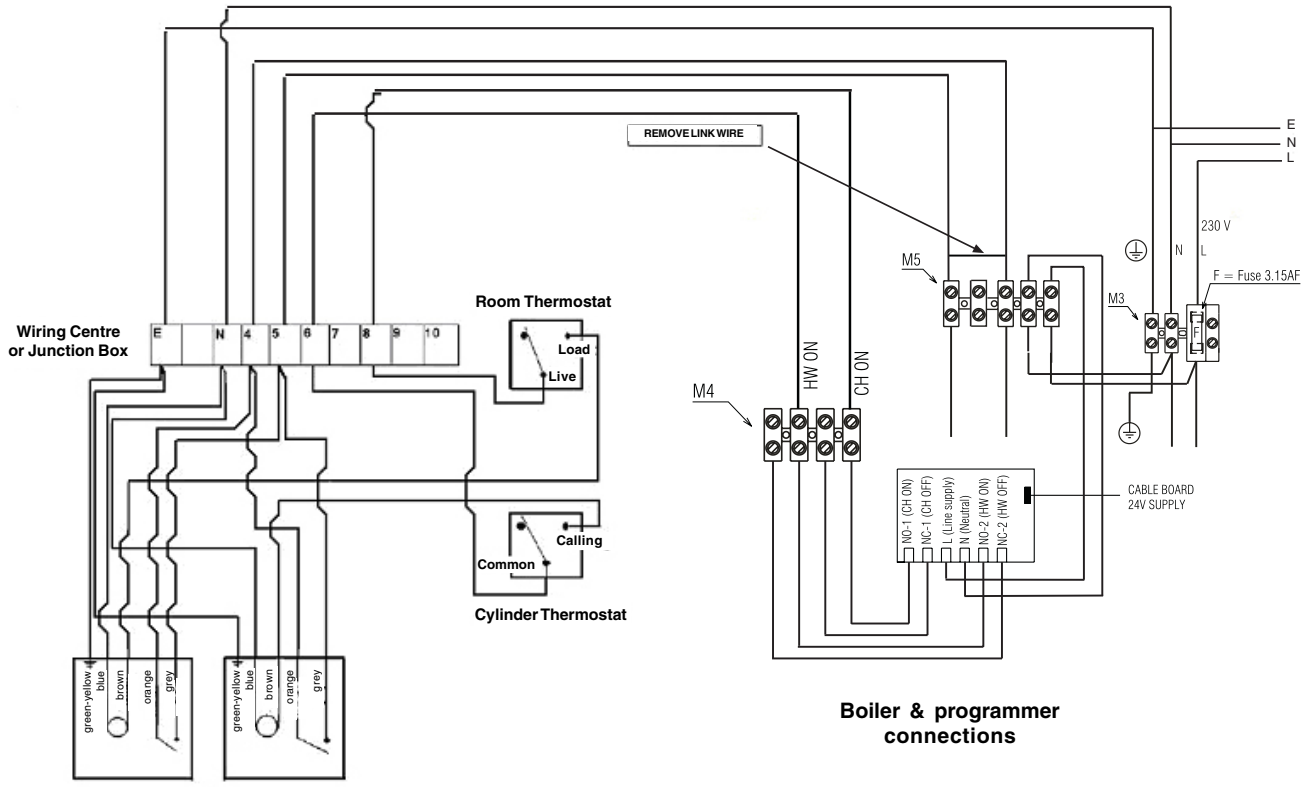

Fig. 40

8.4.2. "Y" - Plan with Vokera 2-channel programmer

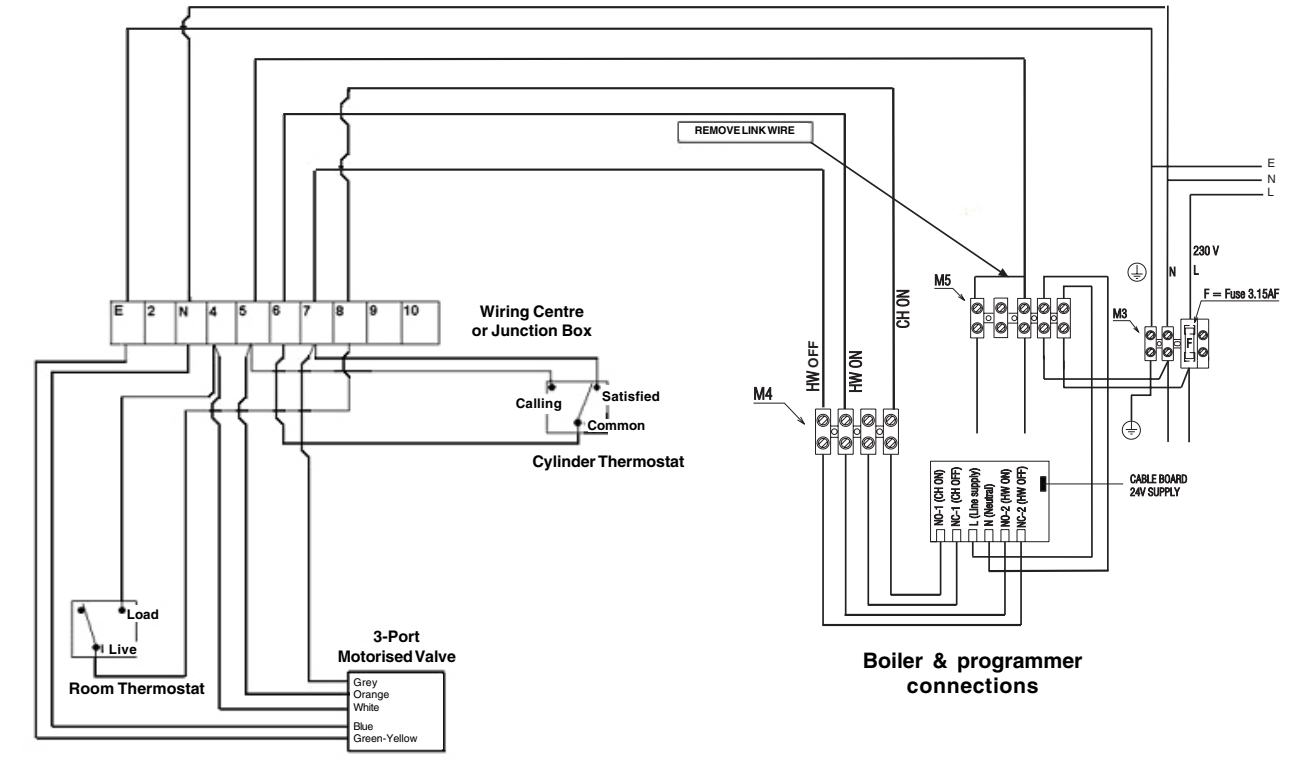

Table 1

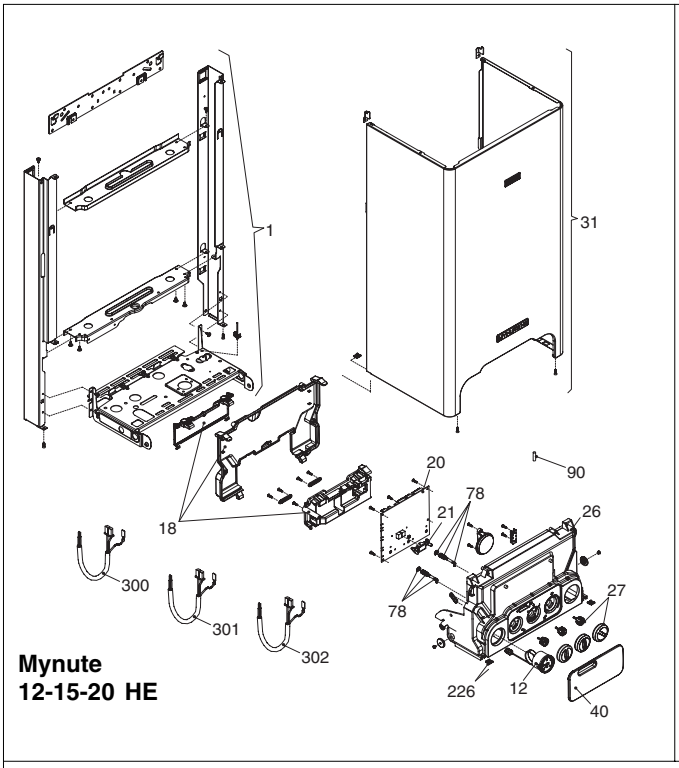

Mynute 12-15-20 HE

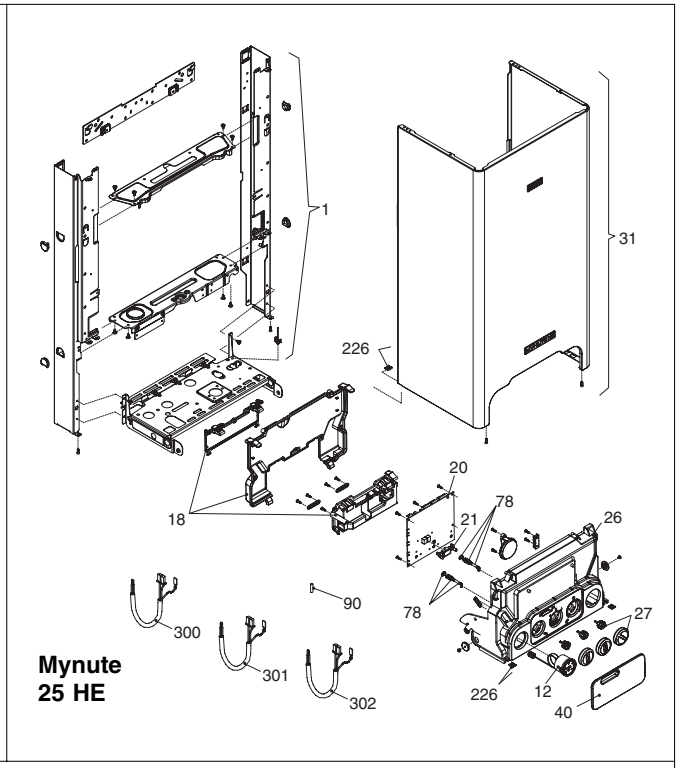

Mynute 25 HE

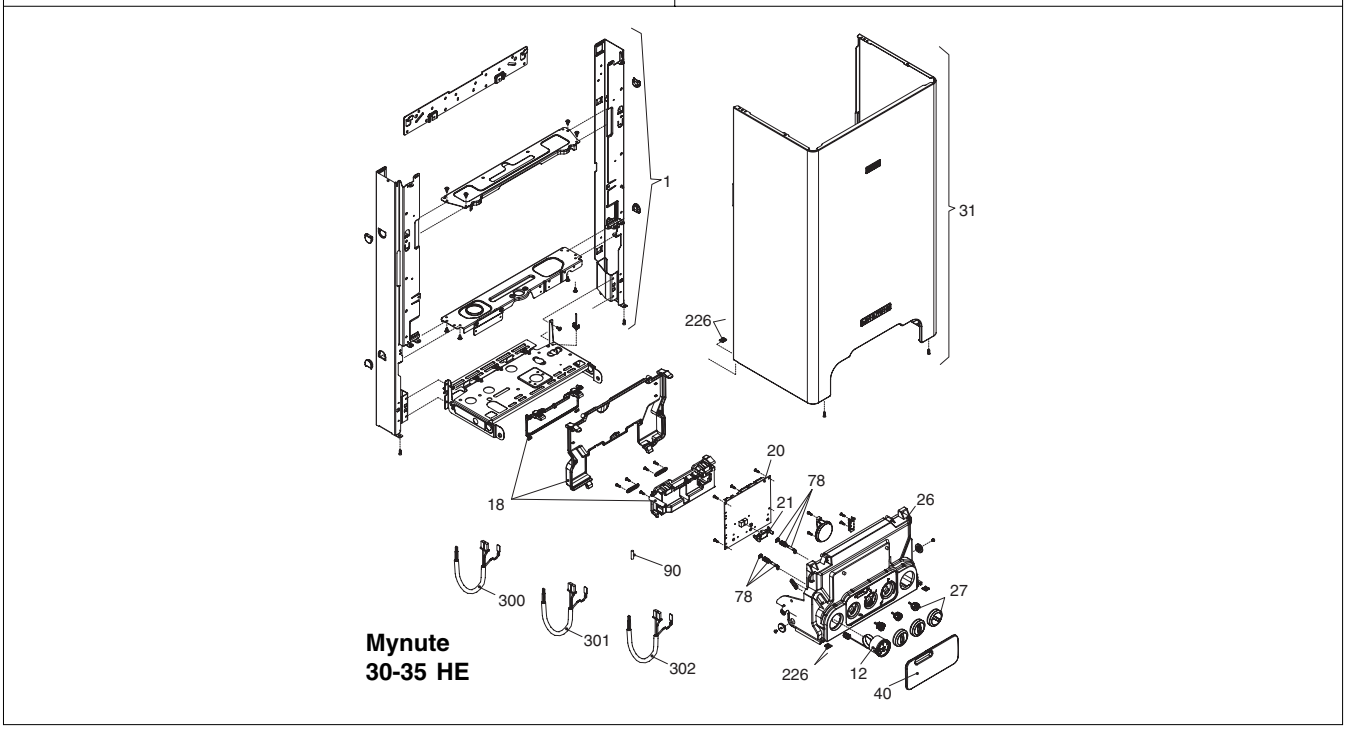

Mynute 30-35 HE

POS.	DESCRIPTION	12 HE	15 HE	20 HE	25 HE	30 HE	35 HE
1	Frame assembly	01005441	01005441	01005441	01005444	01005445	01005445
12	Pressure gauge	2564	2564	2564	2564	2564	2564
18	Cover assembly	10028554	10028554	10028554	10028554	10028554	10028554
20	Printed Circuit Board	10028558	10028558	10028558	10028558	10028558	10028558
21	Led light guide	10028557	10028557	10028557	10028557	10028557	10028557
26	Front panel	10028551	10028551	10028551	10028551	10028551	10028551
27	Knob assembly	10028559	10028559	10028559	10028559	10028559	10028559
31	Case assembly	10028432	10028432	10028432	10028448	10028451	10028451
40	Door panel	10028553	10028553	10028553	10028553	10028553	10028553
78	Cover assembly	01005442	01005442	01005442	01005442	01005442	01005442
90	Fuse	3478	3478	3478	3478	3478	3478
226	Edge clip	5128	5128	5128	5128	5128	5128
300	Wiring harness	10028598	10028598	10028598	10028598	10028596	10028596
301	Wiring harness	10028593	10028593	10028593	10028593	10028598	10028598
302	Wiring harness	10028596	10028596	10028596	10028596	10028593	10028593

Table 2

Mynute 12-15-20 HE

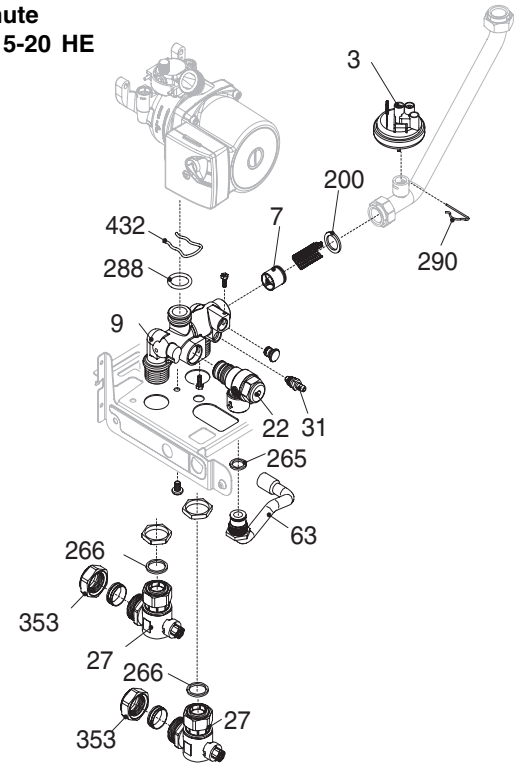

Mynute 25 HE

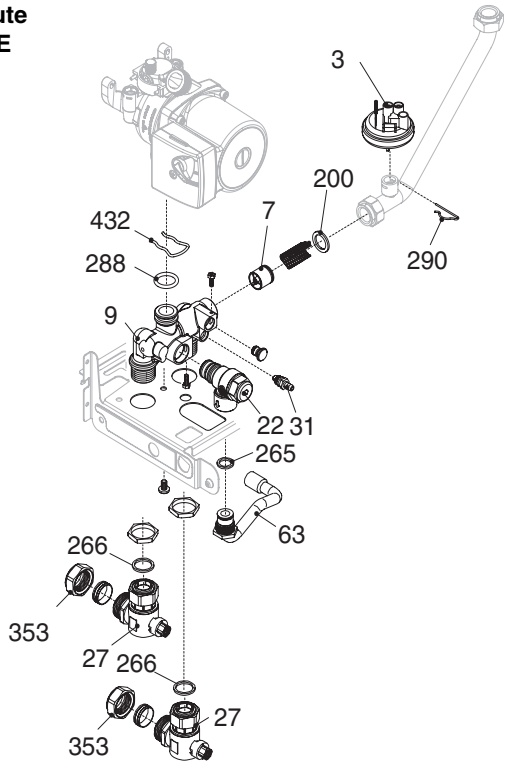

Mynute 30-35 HE

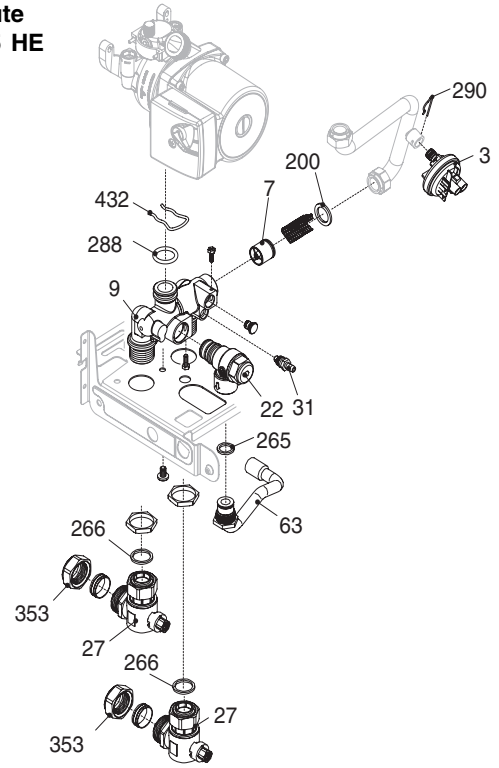

POS.	DESCRIPTION	12 HE	15 HE	20 HE	25 HE	30 HE	35 HE
3	Pressure switch	2044	2044	2044	2044	2044	2044
7	Heating by-pass valve	2047	2047	2047	2047	1552	1552
9	Heating manifold	10028415	10028415	10028415	10028415	10028415	10028415
22	Safety valve	2907	2907	2907	2907	2907	2907
27	Heating cock	1789	1789	1789	1789	1789	1789
31	Drain tap	01005137	01005137	01005137	01005137	01005137	01005137
63	Pipe	10020898	10020898	10020898	10020898	10020898	10020898
200	Washer	5023	5023	5023	5023	5023	5023
265	Washer	5236	5236	5236	5236	5236	5236
266	Washer	5237	5237	5237	5237	5237	5237
288	Ring	6898	6898	6898	6898	6898	6898
290	Clip	2165	2165	2165	2165	2165	2165
353	Nut	1824	1824	1824	1824	1824	1824
432	Clip	10024958	10024958	10024958	10024958	10024958	10024958

Table 3

Mynute 12-15-20 HE

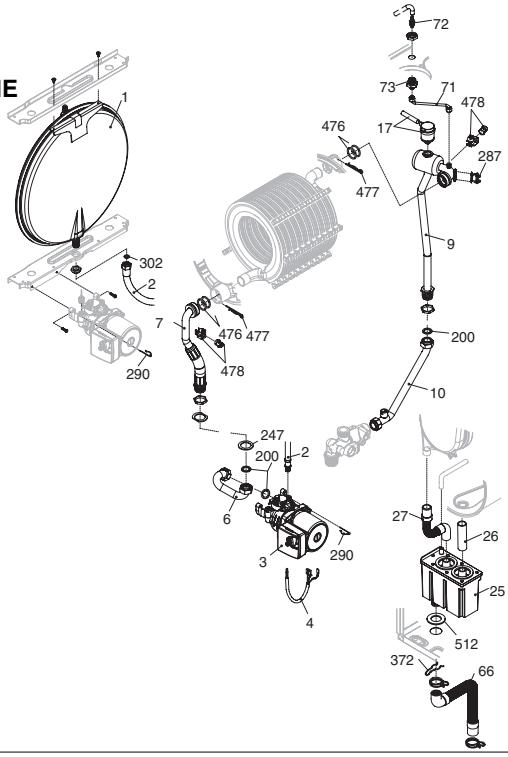

Mynute 25 HE

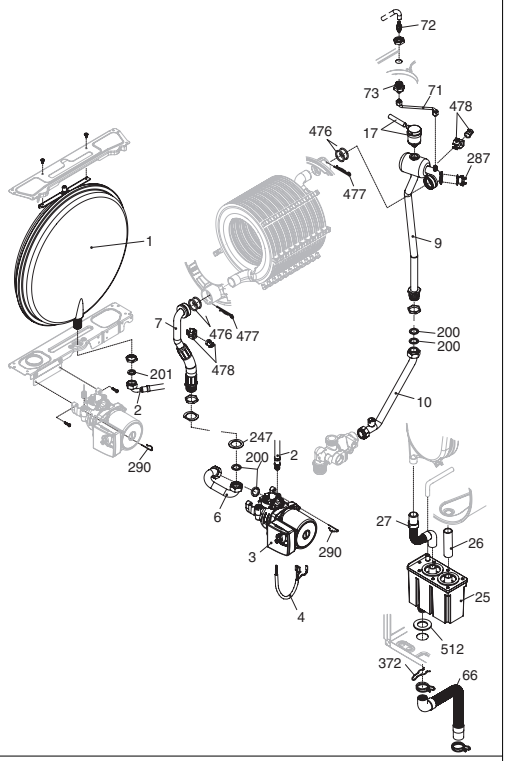

Mynute 30-35 HE

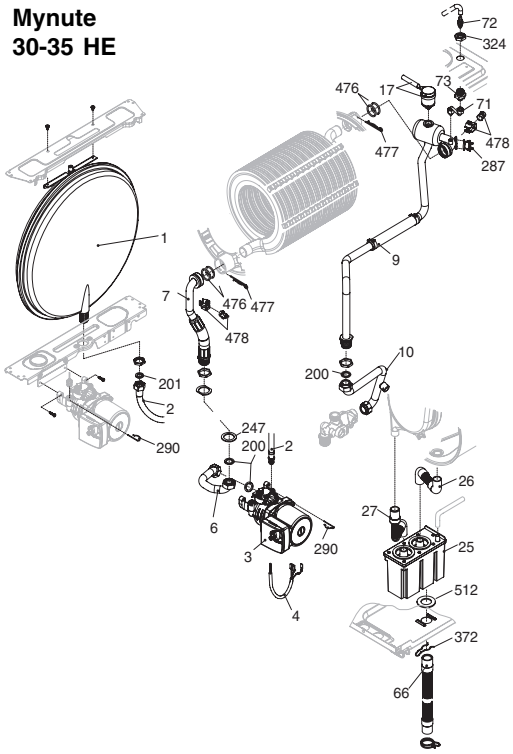

POS.	DESCRIPTION	12 HE	15 HE	20 HE	25 HE	30 HE	35 HE
1	Expansion vessel	10028535	10028535	10028535	2204	2573	2573
2	Pipe	10028603	10028603	10028603	10023603	10023603	10023603
3	Pump	10027571	10027571	10027571	10027571	10027258	10027258
4	Wiring harness (pump)	10028594	10028594	10028594	10028594	10028594	10028594
6	Pipe	10028428	10028428	10028428	10028617	10028624	10028624
7	Pipe	10027317	10027317	10027317	10027317	10027317	10027317
9	Pipe	10028429	10028429	10028429	10028429	10028264	10028264
10	Pipe	10028904	10028904	10028904	10028906	10028905	10028905
17	Air venting plug	10026275	10026275	10026275	10026275	10026275	10026275
25	Siphon	10028405	10028405	10028405	10028405	10028405	10028405
26	Condensing pipe	10028540	10028540	10028540	10028540	10027191	10027191
27	Condensing pipe	10027192	10027192	10027192	10027192	10027192	10027192
66	Condensing pipe	10028539	10028539	10028539	10028539	10026272	10026272
71	Pipe	10028430	10028430	10028430	10028430	10028515	10028515
72	Venting-plug	01005137	01005137	01005137	01005137	01005137	01005137
73	Cock	10028431	10028431	10028431	10028431	10028431	10028431
200	Washer	5023	5023	5023	5023	5023	5023
201	Washer	-	-	-	5026	5026	5026
247	Washer	5203	5203	5203	5203	5203	5203
287	High limit thermostat	2258	2258	2258	2258	2258	2258
290	Clip	2165	2165	2165	2165	2165	2165
302	Washer	5025	5025	5025	-	-	-
372	Clip	2588	2588	2588	2588	2588	2588
476	O ring	10026324	10026324	10026324	10026324	10026324	10026324
477	Split pin	10026269	10026269	10026269	10026269	10026269	10026269
478	Ntc sensor	10026273	10026273	10026273	10026273	10026273	10026273
512	Washer	10027193	10027193	10027193	10027193	10027193	10027193

Table 4

Mynute 12-15-20 HE

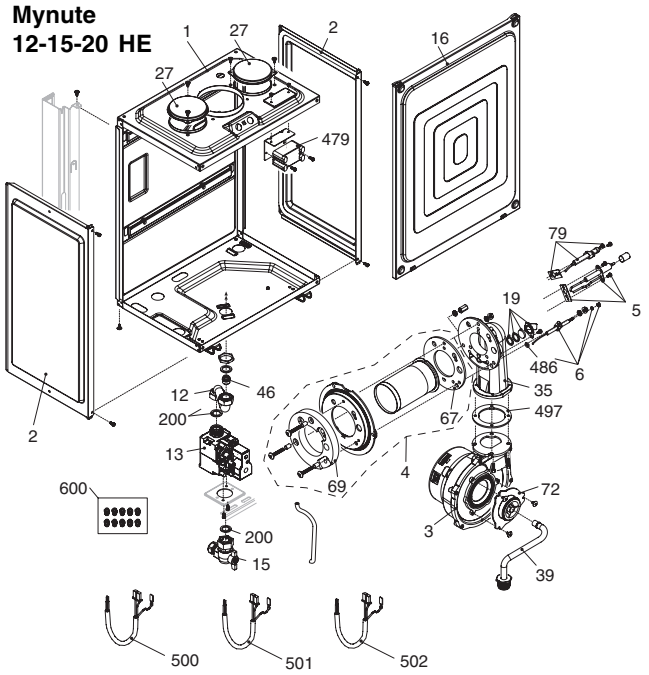

Mynute 25 HE

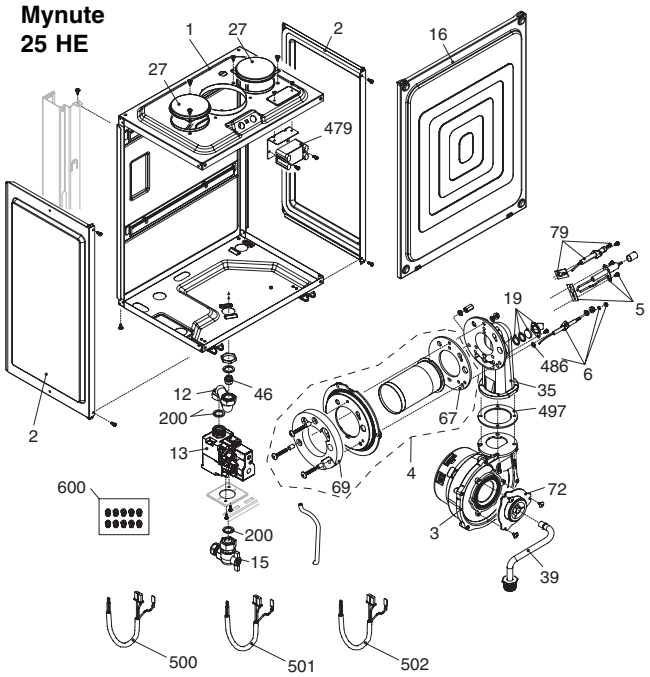

Mynute 30-35 HE

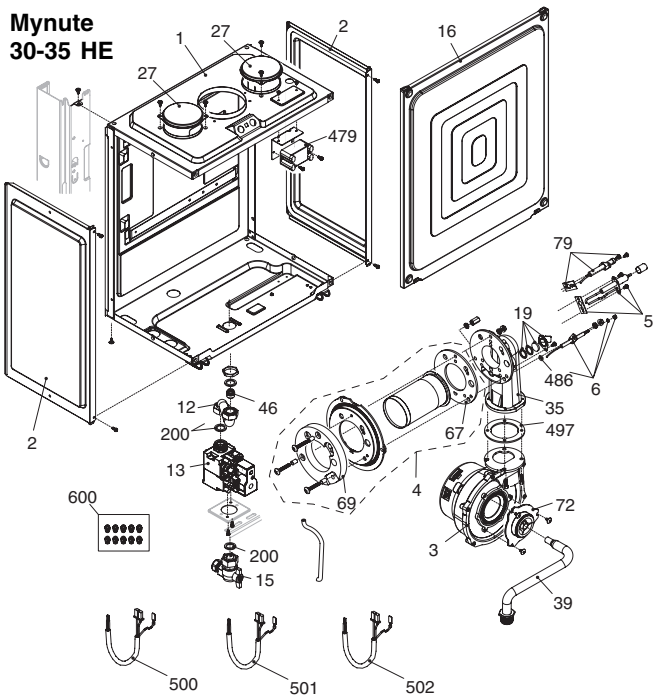

POS.	DESCRIPTION	12 HE	15 HE	20 HE	25 HE	30 HE	35 HE
1	Roomsealed chamber	10028341	10028341	10028341	10028341	10028447	10028447
2	Side	10026231	10026231	10026231	10026231	10026231	10026231
3	Fan	10028456	10028456	10028456	10028456	10028456	10028456
4	Burner	10028537	10028537	10028537	10028537	10028537	10028537
5	Spark/ignition electrode	10027864	10027864	10027864	10027864	10027864	10027864
6	Condense electrode	10026316	10026316	10026316	10026316	10026316	10026316
12	Gas pipe	10028423	10028423	10028423	10028628	10028629	10028629
13	Gas valve	10028538	10028538	10028538	10028538	10028538	10028538
15	3/4" gas cock	10020897	10020897	10020897	10020897	10020897	10020897
16	Air box cover	10028345	10028345	10028345	10028345	10026230	10026230
19	Glass stopper assembly	10026328	10026328	10026328	10026328	10026328	10026328
27	Plug	10023805	10023805	10023805	10023805	10023805	10023805
35	Air gas conveyor	10028420	10028420	10028420	10028420	10028420	10028420
39	Gas pipe	10028424	10028424	10028424	10028424	10028206	10028206
46	Gas diaphragm	10020265	10020265	10020265	10027161	10027162	10027162
67	Washer	10026322	10026322	10026322	10026322	10026322	10026322
69	Tryton	10028425	10028425	10028425	10028425	10028425	10028425
72	Mixer	10027408	10027408	10027408	10024295	10024295	10024295
79	Flame detection electrode	10028422	10028422	10028422	10028422	10028422	10028422
200	Washer	5023	5023	5023	5023	5023	5023
479	Transformer	10026237	10026237	10026237	10026237	10026237	10026237
486	O ring	10026325	10026325	10026325	10026325	10026325	10026325
497	Washer	10026796	10026796	10026796	10026796	10026796	10026796
500	Wiring harness	10028599	10028599	10028599	10028599	10028599	10028599
501	Wiring harness (gas valve)	10028600	10028600	10028600	10028600	10028626	10028626
502	Spark electrode cable	10026558	10026558	10026558	10026558	10026558	10026558
600	Lpg conversion kit	01005446	01005446	01005446	01005447	01005448	01005448

Table 5

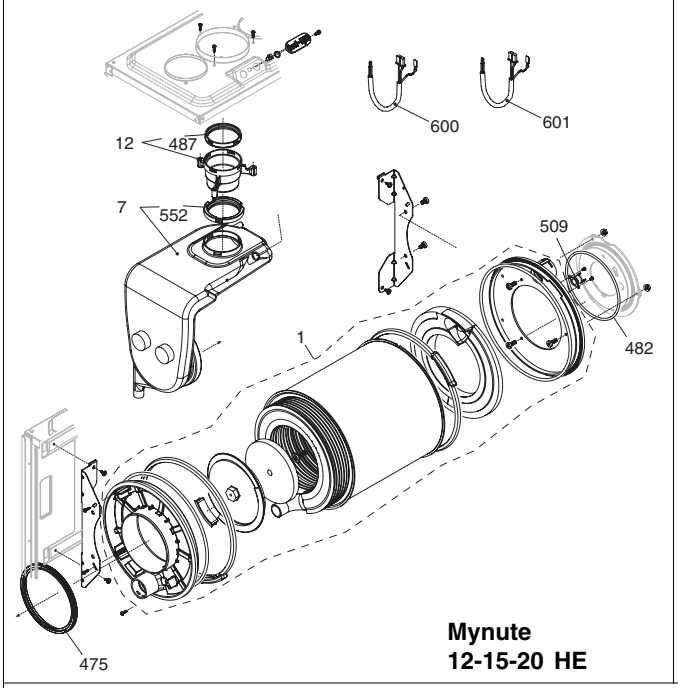

Mynute 12-15-20 HE

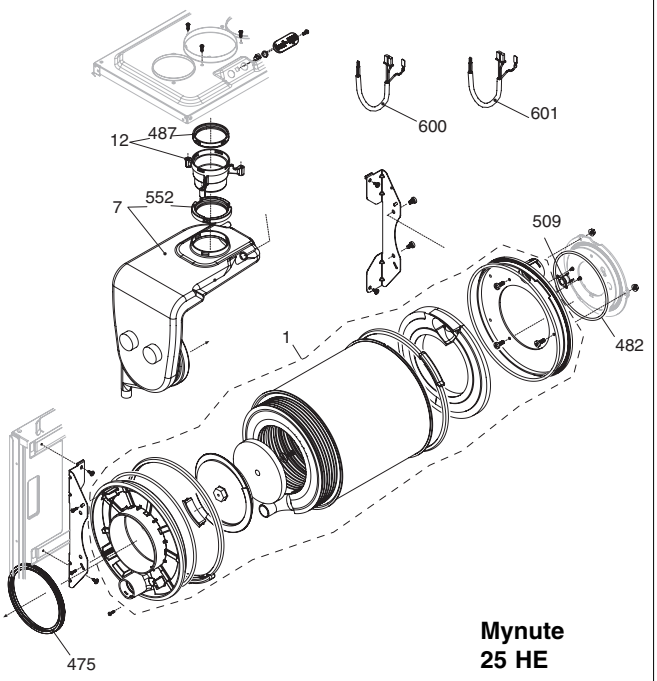

Mynute 25 HE

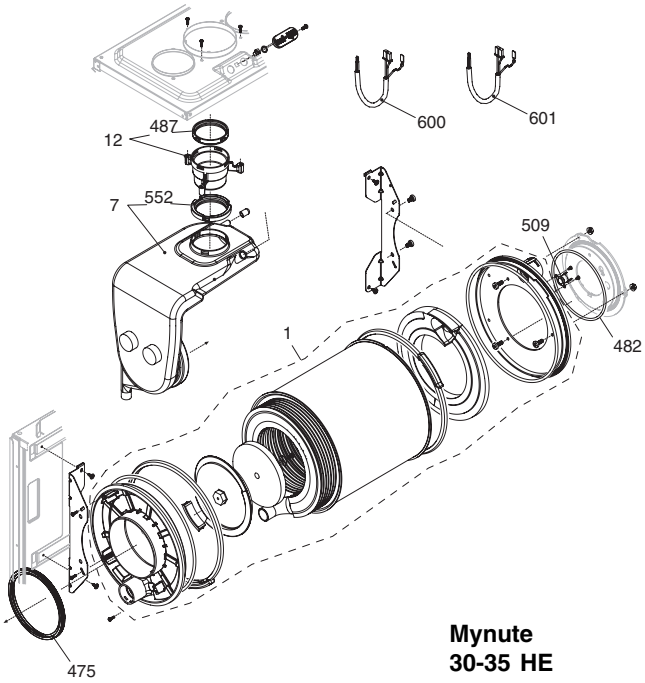

Mynute 30-35 HE

POS.	DESCRIPTION	12 HE	15 HE	20 HE	25 HE	30 HE	35 HE
1	Condensing exchanger assembly	01005443	01005443	01005443	01005443	01005369	01005369
7	Conveyor	10028536	10028536	10028536	10028536	10028623	10028623
12	Flue drain connection	10028421	10028421	10028421	10028421	10028421	10028421
475	Washer	10026323	10026323	10026323	10026323	10026323	10026323
482	Washer	10026366	10026366	10026366	10026366	10026366	10026366
487	Washer	10026345	10026345	10026345	10026345	10026345	10026345
509	High limit thermostat	10026982	10026982	10026982	10026982	10026982	10026982
552	Washer	10028426	10028426	10028426	10028426	10028426	10028426
600	Wiring harness (gas valve)	10028595	10028595	10028595	10028595	10028601	10028601
601	Wiring harness	10027360	10027360	10027360	10027360	10027360	10027360

10.1 RELATED DOCUMENTS

BS 6798		INSTALLATION OF BOILERS OF RATED INPUT NOT EXCEEDING 60 kW
BS 5449	PART 1	FORCED CIRCULATION HOT WATER SYSTEMS
BS 5446		INSTALLATION OF GAS HOT WATER SUPPLIES FOR DOMESTIC PURPOSES
BS 5440	PART 1	FLUES
BS 5482	PART 1	DOMESTIC BUTANE & PROPANE GAS BURNERS IN PERMAMENT DWELLINGS

10.2 TECHNICAL DATA

Gas Pressures	12HE	15HE	20HE	25HE	30HE	35HE	
Inlet pressure	37.00	37.00	37.00	37.00	37.00	37.00	mbar
Maximum gas rate	0.93	1.16	1.55	1.94	2.33	2.69	kg/hr
Minimum gas rate	0.27	0.27	0.39	0.47	0.54	0.54	kg/hr
Injector size	3.6	3.6	3.6	4.7	5.0	5.0	mm
Efficiency							
SEDBUK (%)	93.3 Band "A"	92.9 Band "A"	92.6 Band "A"	92.4 Band "A"	92.8 Band "A"	92.9 Band "A"	
Emissions							
CO max (mg/kWh)	129.0	172.0	215.0	215.0	236.5	268.8	mg/kWh
CO min (mg/kWh)	10.8	10.8	10.8	16.1	32.3	32.3	mg/kWh
NOx max (mg/kWh)	123.6	141.2	97.1	70.6	88.3	88.3	mg/kWh
NOx min (mg/kWh)	35.3	35.3	53.0	53.0	70.6	70.6	mg/kWh
CO_2 max	10.0	10.0	10.0	10.0	10.0	10.0	%
CO_2 min	10.0	10.0	10.0	10.0	10.0	10.0	%
CO/CO_2 ratio (max)	0.001 to 1	0.001 to 1	0.002 to 1	0.002 to 1	0.002 to 1	0.002 to 1	
CO/CO_2 ratio (min)	0.0001 to 1	0.0001 to 1	0.0001 to 1	0.0001 to 1	0.0003 to 1	0.0003 to 1	

10.3 CONVERTING THE APPLIANCE GAS TYPE

To convert the appliance to another gas type it is necessary to change the burner injector and adjust the gas valve.

- To change the injector see 6.12.1
- To adjust CO2 value see 7.4.1-2-3

10.4 GAS SUPPLY

The gas supply must be connected to the appliance by a competent LPG installer and must be of sufficient size to supply the appliance at its maximum output. An existing supply must be checked to ensure that it is of adequate size to deal with the maximum rated input of this and any other appliances that it serves.

10.5 GAS SUPPLY INSTALLATION

The entire installation including the meter must be purged and checked for gas soundness.

10.6 ADJUSTING THE GAS VALVE

THE GAS VALVE MUST BE SET-UP OR ADJUSTED WITH THE AID OF A PROPERLY CALIBRATED FLUE GAS ANALYSER.

10.6a CHECKING THE CO2 AND ADJUSTING THE GAS VALVE

THE GAS VALVE MUST BE SET-UP OR ADJUSTED WITH THE AID OF A PROPERLY CALIBRATED FLUE GAS ANALYSER.

Isolate the appliance from the electrical supply and remove the appliance casing as described in 4.7.1. Set the flue gas analyser to read CO2 and insert the probe into the flue analysis test point (**A, B** fig. 31). Restore the electrical supply to the boiler and switch the boiler to the OFF mode. To adjust the gas valve you must first ensure that the fan speed potentiometers (trimmers) have been set correctly (see 10.7).

Remove the 3-selector knobs, locate and press the CO button (see fig. 32). The appliance will now operate in CO mode for approximately 15-minutes (see 7.10).

10.6.1 GAS VALVE MAXIMUM SETTING

Locate and gently turn the HTG trimmer till the maximum value (fan speed) is obtained and check that it corresponds with the appropriate CO2 value (Maximum) for the respective appliance. If the CO2 reading is correct, proceed to gas valve minimum setting (10.6.2).

However, If the CO2 reading is incorrect, the maximum gas pressure must be adjusted as follows:

- Using a suitable screwdriver, very slowly turn the maximum adjustment screw (see fig. 33) – clockwise to decrease, counter clockwise to increase – until the correct value is displayed on the CO2 analyser (allow time for the analyser to stabilise).

10.6.2 GAS VALVE MINIMUM SETTING

Locate and gently turn the HTG trimmer till the minimum value (fan speed) is obtained and check that it corresponds with the appropriate CO2 value (Minimum) for the respective appliance. If the CO2 reading is correct, rotate the HTG trimmer until

the correct value is obtained for the respective appliance (see fan speed table) and proceed to 10.6.3.

However, If the CO2 reading is incorrect, the minimum gas pressure must be adjusted as follows:

- Using a suitable screwdriver, very slowly turn the minimum adjustment screw (see fig. 33) – clockwise to increase, counter clockwise to decrease - until the correct value is displayed on the CO2 analyser (allow time for the analyser to stabilise).

10.6.3 COMPLETION

On completion of the combustion analysis check and/or any gas valve adjustment, set the HTG trimmer to the corresponding value as detailed in the fan speed table. Refit the 3-selector knobs and move the mode selector to the OFF position. Remove the test probe from the test point and refit the sealing screw/s and/or cap.

IMPORTANT

A GAS SOUNDNESS CHECK MUST BE CARRIED OUT IF ANY GAS CARRYING COMPONENTS HAVE BEEN REMOVED, REPLACED, OR DISTURBED.

FAN SPEED (rpm) TABLE

MODEL	MAX	MIN	HTG	IGN
12HE	3.700	1.300	3.500	3.700
15HE	4.100	1.300	4.100	3.700
20HE	5.400	1.700	5.400	3.700
25HE	5.400	1.700	5.400	3.700
30HE	5.200	1.400	5.200	3.700
35HE	6.000	1.400	6.000	3.700

10.7 APPLIANCE FAN SPEEDS

The appliance fan speeds require to be checked and/or adjusted prior to making any adjustments to the gas valve or if the main PCB has been replaced.

ATTENTION

Gas type and appliance fan speed (output) **must be set** according to the specific appliance specification. Vokera accepts no responsibility if the gas type and/or fan speed is not correctly adjusted according to the respective appliance specification as detailed on the appliance data badge.

10.7.1 CHECKING/ADJUSTING THE APPLIANCE FAN SPEEDS

Move the selector switch to the OFF position and remove the 3-selector knobs.

10.7.2 ABSOLUTE MAX FAN SPEED

Locate the MAX trimmer (fig. 32) and gently adjust clockwise or counter clockwise to achieve the correct fan speed (see table above).

NOTE

The display shows the fan RPM in multiples of 1000, i.e. 2.5 = 2500RPM.

10.7.3 ABSOLUTE MIN FAN SPEED

Locate the MIN trimmer (fig. 32) and gently adjust clockwise or counter clockwise to achieve the correct fan speed (see table above).

NOTE

The display shows the fan RPM in multiples of 1000, i.e. 2.5 = 2500RPM.

10.7.4 IGNITION FAN SPEED

ATTENTION

Do this operation only after the adjusting of absolute max and min fan speed.

Locate the IGN trimmer (fig. 32) and gently adjust clockwise or counter clockwise to achieve the correct fan speed (see table above).

NOTE

The display shows the fan RPM in multiples of 1000, i.e. 2.5 = 2500RPM.

10.7.5 HEATING FAN SPEED

Locate the HTG trimmer (fig. 32) and gently adjust clockwise or counter clockwise to achieve the correct fan speed (see table above).

NOTE

The display shows the fan RPM in multiples of 1000, i.e. 2.5 = 2500RPM.

BENCHMARK No. | | | | | | |

COLLECTIVE MARK

GAS BOILER COMMISSIONING CHECKLIST

BOILER SERIAL No. _____ NOTIFICATION No. _____

CONTROLS

To comply with the Building Regulations, each section must have a tick in one or other of the boxes

TIME & TEMPERATURE CONTROL TO HEATING	ROOM T/STAT & PROGRAMMER/TIMER	☐	PROGRAMMABLE ROOMSTAT	☐
TIME & TEMPERATURE CONTROL TO HOT WATER	CYLINDER T/STAT & PROGRAMMER/TIMER	☐	COMBI BOILER	☐
HEATING ZONE VALVES	FITTED	☐	NOT REQUIRED	☐
HOT WATER ZONE VALVES	FITTED	☐	NOT REQUIRED	☐
THERMOSTATIC RADIATOR VALVES	FITTED	☐		
AUTOMATIC BYPASS TO SYSTEM	FITTED	☐	NOT REQUIRED	☐

FOR ALL BOILERS CONFIRM THE FOLLOWING

THE SYSTEM HAS BEEN FLUSHED IN ACCORDANCE WITH THE BOILER MANUFACTURER'S INSTRUCTIONS?	☐
THE SYSTEM CLEANER USED	
THE INHIBITOR USED	

FOR THE CENTRAL HEATING MODE, MEASURE & RECORD

GAS RATE		^{3}/hr		^{3}/hr
BURNER OPERATING PRESSURE (IF APPLICABLE)	☐	N/A		
CENTRAL HEATING FLOW TEMPERATURE				°C
CENTRAL HEATING RETURN TEMPERATURE				°C

FOR COMBINATION BOILERS ONLY

HAS A WATER SCALE REDUCER BEEN FITTED?	YES ☐	NO ☐
WHAT TYPE OF SCALE REDUCER HAS BEEN FITTED?		

FOR THE DOMESTIC HOT WATER MODE, MEASURE & RECORD

GAS RATE		^{3}/hr		^{3}/hr
MAXIMUM BURNER OPERATING PRESSURE (IF APPLICABLE)	☐	N/A		mbar
COLD WATER INLET TEMPERATURE				°C
HOT WATER OUTLET TEMPERATURE				°C
WATER FLOW RATE				lts/min

FOR CONDENSING BOILERS ONLY CONFIRM THE FOLLOWING

THE CONDENSATE DRAIN HAS BEEN INSTALLED IN ACCORDANCE WITH THE MANUFACTURER'S INSTRUCTIONS?	YES ☐

FOR ALL INSTALLATIONS CONFIRM THE FOLLOWING

THE HEATING AND HOT WATER SYSTEM COMPLIES WITH CURRENT BUILDING REGULATIONS				☐
THE APPLIANCE AND ASSOCIATED EQUIPMENT HAS BEEN INSTALLED AND COMMISSIONED IN ACCORDANCE WITH THE MANUFACTURER'S INSTRUCTIONS				☐
IF REQUIRED BY THE MANUFACTURER, HAVE YOU RECORDED A CO/CO_2 RATIO READING?	N/A ☐	YES		CO/CO_2 RATIO
THE OPERATION OF THE APPLIANCE AND SYSTEM CONTROLS HAVE BEEN DEMONSTRATED TO THE CUSTOMER				☐
THE MANUFACTURER'S LITERATURE HAS BEEN LEFT WITH THE CUSTOMER				☐

COMMISSIONING ENG'S NAME PRINT _____ CORGI ID No. _____

SIGN _____ DATE _____

SERVICE INTERVAL RECORD

It is recommended that your heating system is serviced regularly
and that you complete the appropriate Service Interval Record Below.

Service Provider. Before completing the appropriate Service Interval Record below, please ensure you have carried out the service as described in the boiler manufacturer's instructions. Always use the manufacturer's specified spare part when replacing all controls

SERVICE 1 DATE
ENGINEER NAME
COMPANY NAME
TEL No.
CORGI ID CARD SERIAL No.
COMMENTS

SIGNATURE

SERVICE 2 DATE
ENGINEER NAME
COMPANY NAME
TEL No.
CORGI ID CARD SERIAL No.
COMMENTS

SIGNATURE

SERVICE 3 DATE
ENGINEER NAME
COMPANY NAME
TEL No.
CORGI ID CARD SERIAL No.
COMMENTS

SIGNATURE

SERVICE 4 DATE
ENGINEER NAME
COMPANY NAME
TEL No.
CORGI ID CARD SERIAL No.
COMMENTS

SIGNATURE

SERVICE 5 DATE
ENGINEER NAME
COMPANY NAME
TEL No.
CORGI ID CARD SERIAL No.
COMMENTS

SIGNATURE

SERVICE 6 DATE
ENGINEER NAME
COMPANY NAME
TEL No.
CORGI ID CARD SERIAL No.
COMMENTS

SIGNATURE

SERVICE 7 DATE
ENGINEER NAME
COMPANY NAME
TEL No.
CORGI ID CARD SERIAL No.
COMMENTS

SIGNATURE

SERVICE 8 DATE
ENGINEER NAME
COMPANY NAME
TEL No.
CORGI ID CARD SERIAL No.
COMMENTS

SIGNATURE

SERVICE 9 DATE
ENGINEER NAME
COMPANY NAME
TEL No.
CORGI ID CARD SERIAL No.
COMMENTS

SIGNATURE

SERVICE 10 DATE
ENGINEER NAME
COMPANY NAME
TEL No.
CORGI ID CARD SERIAL No.
COMMENTS

SIGNATURE

Vokèra
heating for life

Cod. 10028541 - 21/06 - Ed. 1

Registered address:
Vokèra Ltd
Borderlake House
Unit 7 Riverside Industrial Estate
London Colney
Herts AL2 1HG

enquiries@vokera.co.uk

www.vokera.co.uk
www.vokera.ie

Sales, General Enquires
T 0844 391 099
F 0844 391 0998

Vokèra Ireland
West Court, Callan
Co Kilkenny
T 056 7755057
F 056 7755060

Vokèra Limited reserve the right to change
specification without prior notice
Consumers statutory rights are not affected.

A Riello Group Company.
Company Reg No: 1047779