Vokèra
heating for life

Rain

Standard efficiency system boiler
24 - 28 - bi

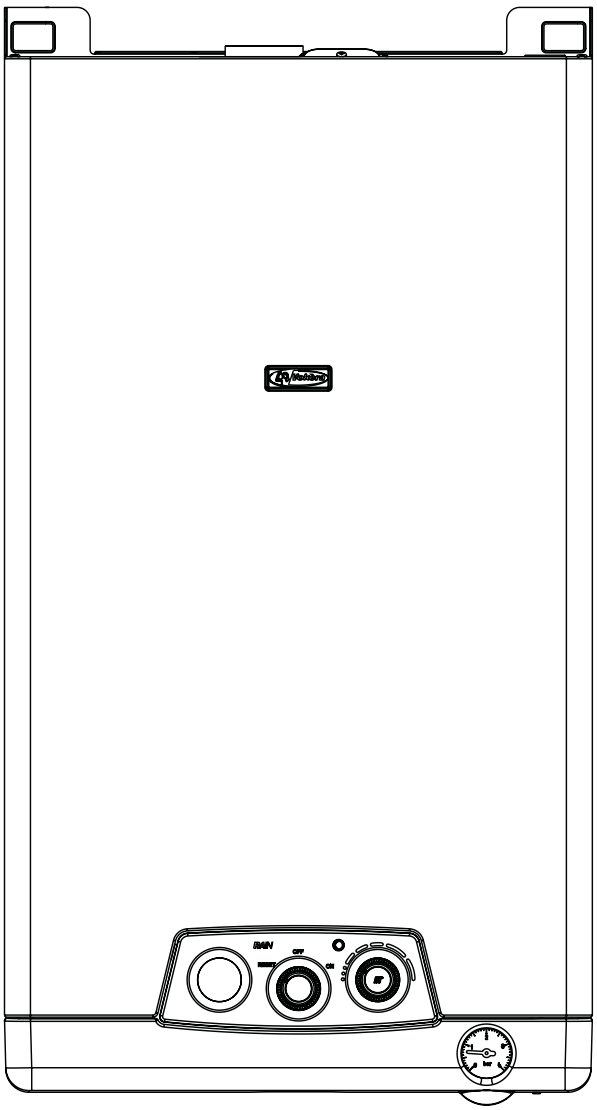

Installation
& Servicing
Instructions

CE

THESE INSTRUCTIONS
TO BE RETAINED
BY USER

benchmark
COLLECTIVE MARK
THE MARK OF QUALITY FOR THE INSTALLATION, COMMISSIONING AND SERVICING OF DOMESTIC HEATING AND HOT WATER SYSTEMS

Vokèra is a licensed member of the Benchmark scheme which aims to improve the standards of installation and commissioning of domestic hot water systems in the UK.

Contents

Design principles and operating sequence		Page
1.1	Principle components	2
1.2	Mode of operation	2
1.3	Safety devices	2

Technical data		Page
2.1	Central heating	3
2.2	Gas pressure	3
2.3	Expansion vessel	3
2.4	Dimensions	3
2.5	Clearances	3
2.6	Connections	3
2.7	Electrical	3
2.8	Flue details	3
2.9	Emissions	3
2.10	Pump duty	4

General requirements		Page
3A.1	Related documents	5
3A.2	Location of appliance	5
3A.3	Gas supply	5
3A.4	Flue system	5
3A.5	Air supply	5
3A.6	Water circulation	5
3A.6.1	Pipework	5
3A.6.2	Automatic by-pass	5
3A.6.3	Drain cocks	5
3A.6.4	Air release points	5
3A.6.5	Expansion vessel	5
3A.6.6	Filling point	5
3A.6.7	Low pressure sealed system	6
3A.6.8	Frequent filling	6
3A.7	Electrical supply	6
3A.8	Mounting on a combustible surface	6
3A.9	Timber framed building	6
3A.10	Inhibitors	6
3A.11	Declaration of conformity	6

Installation		Page
4.1	Delivery	7
4.1.2	RAIN application	7
4.1.3	RAIN bi application	7
4.2	Contents (appliance carton)	7
4.3.1	Unpacking	7
4.3.2	Preparation for mounting the appliance (external application)	7
4.3.3	Important	7
4.4.1	External applications using the enclosure	7
4.4.2	External applications without the enclosure	8
4.5	Fitting the flue	8
4.5.1	Concentric horizontal flue	8
4.5.2	Concentric vertical flue	10
4.5.3	Vokera twin flue application	10
4.6	Connecting the gas and water	10
4.6.1	Gas	10
4.6.2	Flow and return	10
4.6.3	Safety valve	10
4.7	Electrical connections	10
4.8.1	Electrical connection	10
4.8.2	Connecting the mains (230V) input	10
4.7.1	Internal access	11

Commissioning		Page
5.1	Gas supply installation	11
5.2	The heating system	11
5.3	Initial filling of the system	11
5.4	Initial flushing	11
5.5	Pre-operation checks	11
5.6	Initial lighting	11
5.7	Checking the burner pressure	11
5.8	Final flushing of the heating system	12
5.8.1	Inhibtors	12
5.9	Setting the boiler operating temperature	12
5.10	Setting the system design pressure	12
5.11	Regulating the central heating system	12
5.12	Final checks	12
5.13	Instructing the user	12

Servicing instructions		Page
6.1	General	13
6.2	Routine annual servicing	13
6.3	Replacement of components	13
6.4	Component removal procedure	13

Checks, adjustments and fault finding		page
7.1	Checking appliance operation	14
7.2	Appliance mode of operation	14
7.2.1	Selector switch in the OFF position	14
7.2.2	Selector switch in the ON position	14
7.2.3	Appliance functions	14
7.2.4	Heating mode	14
7.2.5	Heating parameters	15
7.3	Checking & adjusting burner pressure	15
7.3.1	Setting the maximum burner pressure	15
7.3.2	Setting the minimum burner pressure	15
7.4	Combustion analysis test	15
7.5	Checking the expansion vessel	16
7.6	External faults	16
7.6.1	Installation faults	16
7.7	Electrical checks	16
7.7.1	Earth continuity test	16
7.7.2	Short circuit check	16
7.7.3	Polarity check	16
7.7.4	Reversed polarity or supply fault	16
7.7.5	Resistance to earth check	17
7.8	Fault finding	17
7.8.1	Replacing the main PCB	17
7.9	Fault codes	17

Wiring diagrams		Page
8.1	External wiring	18
8.2	Typical control applications	18
8.3	Room thermostat	18
8.4	Other controls	18
Functional diagram		19

Exploded diagrams		Page
Table 1-5		21-24

L.P.G. instructions		Page
10.1	Technical data	25
10.2	Converting the appliance gas supply	25
10.3	Gas supply installation	25
10.4	Checking & adjusting burner pressure	25
10.4.1	Setting the maximum burner pressure	25
10.4.2	Setting the minimum burner pressure	25

The Vokera Rain & Rain bi appliances are central heating boilers, which - by design - incorporates electronic ignition, circulating pump, expansion vessel, safety valve, pressure gauge and automatic by-pass.

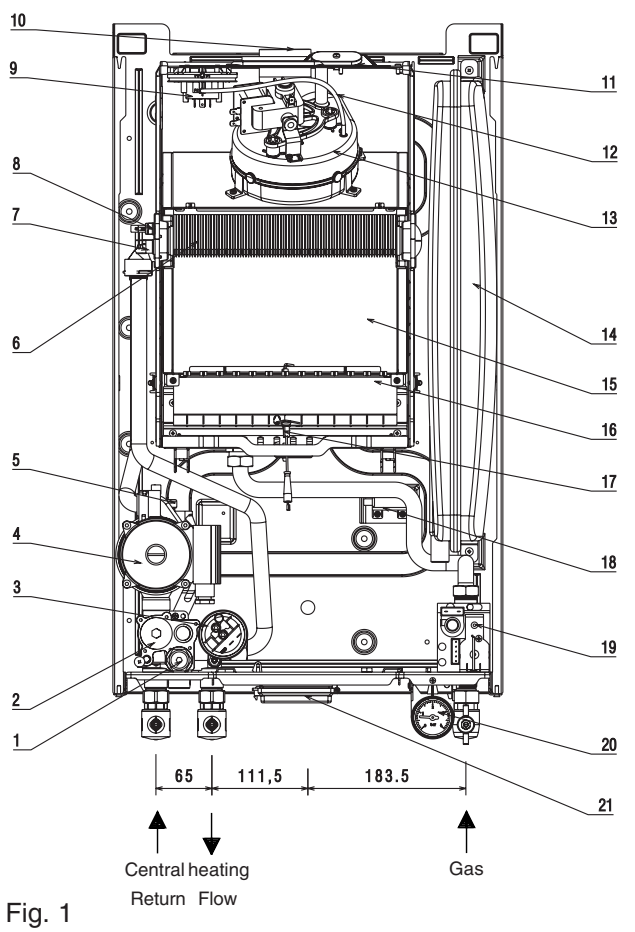

Fig. 1

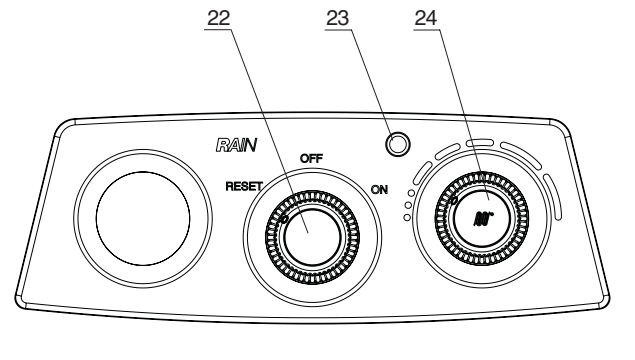

Fig. 1A

They are produced as category II2H3+ appliances, suitable for wall mounting applications only. They are provided with a fan powered flue outlet with an annular coaxial combustion air intake that can be rotated - horizontally - through 360 degrees for various horizontal or vertical applications. The Rain & Rain bi appliances, can also be used with the Vokera twin flue system.
These appliances are designed for use with a sealed system only; consequently they are not intended for use on open vented systems.
The provision of stored hot water is possible by the addition of an indirect cylinder.

Fig.1/1A General Layout

1 Safety valve
2 Hydraulic manifold
3 Pressure switch
4 Pump
5 Auto air vent (AAV)
6 Main heat exchanger
7 High limit thermostat
8 Primary NTC sensor
9 Differential pressure switch
10 Flue outlet
11 Flue gas analysis test point
12 Silicone pressure tube (-)
13 Fan assembly
14 Expansion vessel
15 Combustion chamber
16 Main burner
17 Electrode
18 Transformer
19 Gas valve
20 Pressure gauge
21 Electrical connection box
22 Main switch
23 Led for working mode
24 Central heating control

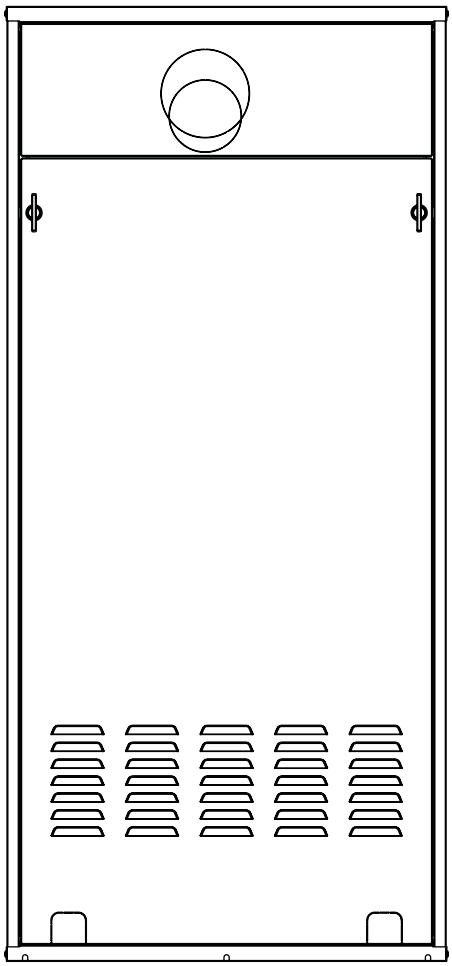
Fig. 1B

1.1 PRINCIPLE COMPONENTS

- A fully integrated electronic control board featuring electronic temperature control, anti-cycle control, pump over-run, self-diagnostic fault indicator, continuous gas modulation.
- Low-water content copper heat exchanger.
- Electronic ignition with flame supervision.
- Integral pump.
- Fan.
- Expansion vessel.
- Differential air pressure switch.
- Water pressure switch.
- Two-stage gas valve.
- Pressure gauge.
- Safety valve.

1.2 MODE OF OPERATION

When there is a request for heat and/or hot water via the programmer/time clock and/or any external control, the pump and fan are started, the fan proves the differential air pressure switch which in-turn allows an ignition sequence to begin.

Ignition is sensed by the electronic circuitry to ensure flame stability at the burner. Once successful ignition has been achieved, the electronic circuitry increases the gas rate to 75% for a period of 15 minutes. Thereafter, the boiler's output will either be increase to maximum or modulate to suit the set requirement.

When the appliance reaches the desired temperature the burner will shut down and the boiler will perform a three-minute anti-cycle (timer delay).

When the request for heat and/or hot water has been satisfied the appliance pump and fan may continue to operate to dissipate any residual heat within the appliance.

1.3 SAFETY DEVICES

When the appliance is in use, safe operation is ensured by:

- A water pressure switch that monitors system water pressure and will de-activate the pump, fan and burner should the system water pressure drop below the rated tolerance.
- A high limit thermostat that over-rides the temperature control circuit to prevent or interrupt the operation of the burner.
- A differential air pressure switch that checks the operation of the fan and flue thereby allowing safe operation of the burner.
- A safety valve which releases excess pressure from the primary circuit.

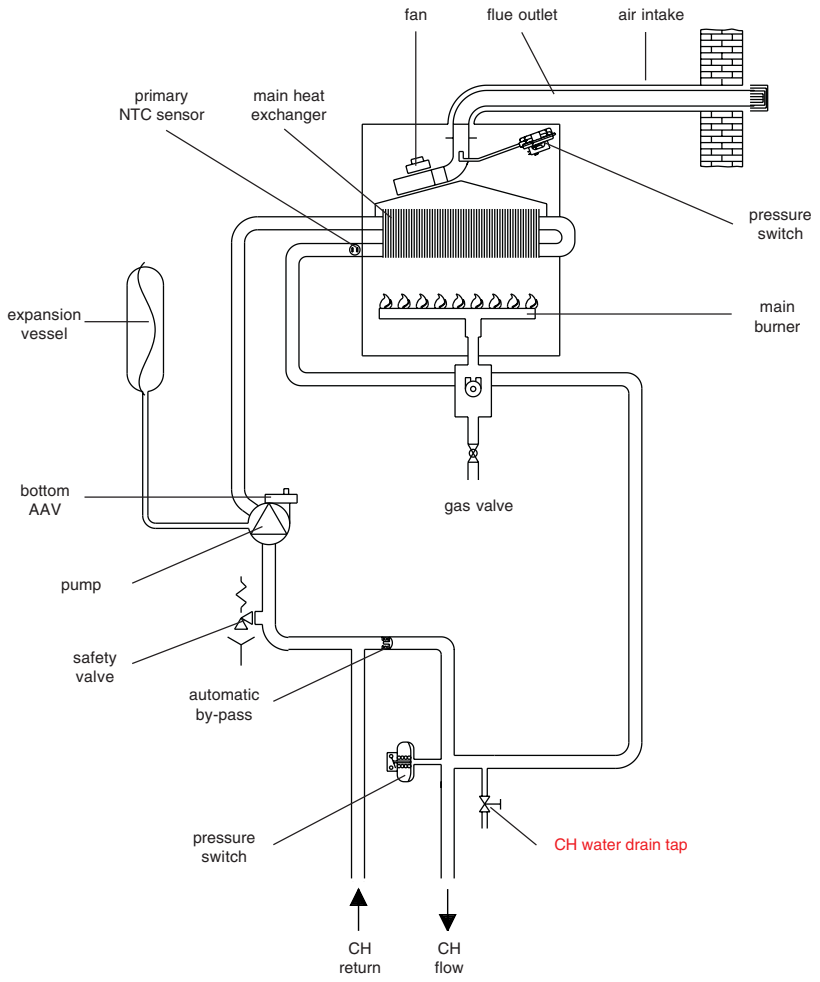

Fig. 2

SECTION 2 TECHNICAL DATA

	24-24 bi	28-28 bi
2.1 Central heating		
Heat input (kW)	26.3	30.5
Heat output (max)	24.0	27.6
Heat output (min)	9.4	10.5
Minimum working pressure	0.5 bar	
Maximum working pressure	3.0 bar	
Minimum flow rate	350 l/h	
2.2 Gas pressures		
Inlet pressure G20	20.0 mbar	
Maximum burner pressure	10.1 mbar	11.3 mbar
Minimum burner pressure	1.9 mbar	2.25 mbar
Gas rate	2.78 m^3/h	3.23 m^3/h
Injectors size	12 x 1.35 mm	13 x 1.35 mm
2.3 Expansion vessel		
Capacity	8 litres	
Maximum system volume	91 litres	
Pre-charge pressure	1.0 bar	
2.4 Dimensions		
Height	810 mm (1223 box)	810 mm (1223 box)
Width	450 mm (654 box)	450 mm (654 box)
Depth	250 mm (257box)	250 mm (257box)
Dry weight	35 kg - 31 kg	35 kg - 31 kg
2.5 Clearances		
Sides	12 mm	
Top	150 mm from casing or 25 mm above flue elbow, whichever is applicable	
Bottom	150 mm	
Front	600 mm	
2.6 Connections		
Flow & return	22 mm (compression)	
Gas	15 mm (compression)	
Safety valve	15 mm copper	
2.7 Electrical		
Voltage	230V/~ 50hz	
Power consumption	125 W	
Internal fuse	2 AL	
External fuse	3 A	
2.8 Flue details (concentric)		
Maximum horizontal flue length (concentric)	1.0 m	1.0 m
Maximum vertical flue length (concentric)	1.0 m	1.0 m
Maximum twin flue length (horizontal ir vertical)	20m/20m + terminal	14,5m/14,5m + terminal
2.9 Emissions		
NOx (max-min) PPM	140 - 110	140 - 110
CO (max-min) PPM	100 - 130	80 - 150
CO_2 (max-min) %	6.95 - 2.60	6.80 - 2.60
CO/CO_2 ratio (max)	0.0014 to 1	0.0011 to 1
CO/CO_2 ratio (min)	0.005 to 1	0.0057 to 1

Ref. Condition 15 °C , 1013,25 mbar, dry gas
NOTE: L.P.G. data refer to section 10

2.10 PUMP DUTY

Fig. 3 shows the flow-rate available - after allowing for pressure loss through the appliance - against system pressure loss. When using this graph apply only the pressure loss of the system. The graph is based on a 20 °C temperature differential.

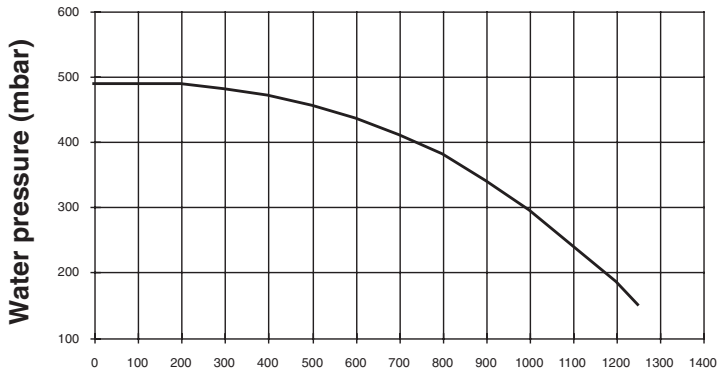

Fig. 3

SECTION 3 GENERAL REQUIREMENTS

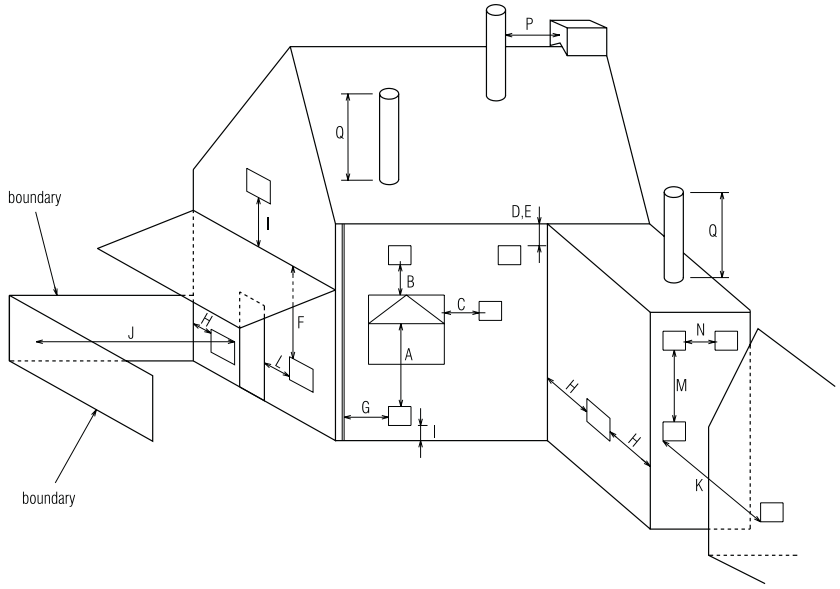

Key	Location	Minimum distance
A	Below an opening (window, air-brick, etc.)	300 mm
B	Above an opening (window, air-brick, etc.)	300 mm
C	To the side of an opening (window, air-brick, etc.)	300 mm
D	Below gutter, drain-pipe, etc.	75 mm
E	Below eaves	200 mm
F	Below balcony, car-port roof, etc.	200 mm
G	To the side of a soil/drain-pipe, etc.	150 mm
H	From internal/external corner or boundary	300 mm
I	Above ground, roof, or balcony level	300 mm
J	From a surface or boundary facing the terminal	600 mm
K	From a terminal facing a terminal	1200 mm
L	From an opening in the car-port into the building	1200 mm
M	Vertically from a terminal on the same wall	1500 mm
N	Horizontally from a terminal on the same wall	300 mm
P	From a structure to the side of the vertical terminal	300 mm
Q	From the top of the vertical terminal to the roof flashing	As determined by the fixed collar of the vertical terminal

Fig. 4

This appliance must be installed by a competent person in accordance with and defined by, the Standard Specification (Domestic Gas Installations) Declaration (I.S. 813).

3A.1 RELATED DOCUMENTS

The installation of this boiler must be in accordance with the relevant requirements of the local building regulations, the current ETCI National Rules for Electrical Installations, and the bylaws of the local water undertaking.
It should be in accordance also with any relevant requirements of the local and/or district authority.

3A.2 LOCATION OF APPLIANCE

The appliance may be installed in any room or internal space, although particular attention is drawn to the requirements of the current ETCI National Rules for Electrical Installations, and I.S. 813, Annex K.
When an appliance is installed in a room or internal space containing a bath or shower, the appliance or any control pertaining to it must not be within reach of a person using the bath or shower. The location chosen for the appliance must permit the provision of a safe and satisfactory flue and termination. The location must also permit an adequate air supply for combustion purposes and an adequate space for servicing and air circulation around the appliance. Where the installation of the appliance will be in an unusual location special procedures may be necessary, refer to I.S. 813 for detailed guidance on this aspect. A compartment used to enclose the appliance must be designed and constructed specifically for this purpose. An existing compartment/cupboard may be utilised provided that it is modified to suit.
The appliance can be installed external to a property or dwelling provide the installation has been carried out in accordance with these instructions and the provisions of I.S. 813.

3A.3 GAS SUPPLY

The gas meter - as supplied by the gas supplier - must be checked to ensure that it is of adequate size to deal with the maximum rated input of all the appliances that it serves. Installation pipes must be fitted in accordance with I.S. 813. Pipe work from the meter to the appliance must be of adequate size. Pipes of a smaller size than the appliance gas inlet connection must not be used. The installation must be tested for soundness in accordance with I.S. 813. If the gas supply serves more than one appliance, it must be ensured that an adequate supply is maintained to each appliance when they are in use at the same time.

3A.4 FLUE SYSTEM

The terminal should be located where the dispersal of combustion products is not impeded and with due regard for the damage and discoloration that may occur to building products located nearby. The terminal must not be located in a place where it is likely to cause a nuisance (see I.S. 813). In cold and/or humid weather, water vapour may condense on leaving the terminal; the effect of such pluming must be considered. If installed less than 2m above a pavement or platform to which people have access (including balconies or flat roofs) the terminal must be protected by a guard of durable material. The guard must be fitted centrally over the terminal. Refer to I.S. 813, when the terminal is 0.5 metres (or less) below plastic guttering or 1 metre (or less) below painted eaves.

3A.5 AIR SUPPLY

The following notes are intended for general guidance only.
This appliance is a fan-flued boiler, approved for use with certain Type ‘B’ and Type ‘C’ applications. Consequently it may require a permanent air vent for combustion air supply.
Guidance on the requirements for combustion air and instructions for Type B22 applications can be found in Section 4.

3A.6 WATER CIRCULATION

Specific recommendations are given in I.S. 813. The following notes are for general guidance only.

3A.6.1 PIPEWORK

It is recommended that copper tubing be used in conjunction with soldered capillary joints.
Where possible pipes should have a gradient to ensure air is carried naturally to air release points and that water flows naturally to drain cocks.
Except where providing useful heat, pipes should be insulated to avoid heat loss and in particular to avoid the possibility of freezing. Particular attention should be paid to pipes passing through ventilated areas such as under floors, loft space, and void areas.

3A.6.2 AUTOMATIC BY-PASS

The appliance has a built-in automatic by-pass. However it may be necessary to fit an external bypass should the design of the heating system require such. In any case, the design of the system should be such that it prevents boiler ‘cycling’.

3A.6.3 DRAIN COCKS

These must be located in accessible positions to facilitate draining of the appliance and all water pipes connected to the appliance.

3A.6.4 AIR RELEASE POINTS

These must be positioned at the highest points in the system where air is likely to be trapped. They should be used to expel trapped air and allow complete filling of the system.

3A.6.5 EXPANSION VESSEL

The appliance has an integral expansion vessel to accommodate the increased volume of water when the system is heated. It can accept up to 8 litres of expansion from within the system, generally this is sufficient, however if the system has an unusually high water content, it may be necessary to provide additional expansion capacity (see 6.19).

3A.6.6 FILLING POINT

An approved method for initial filling of the system and replacing water lost during servicing etc. is required (see fig. 5). This method of filling must comply with local water regulations and/or I.S. 813.

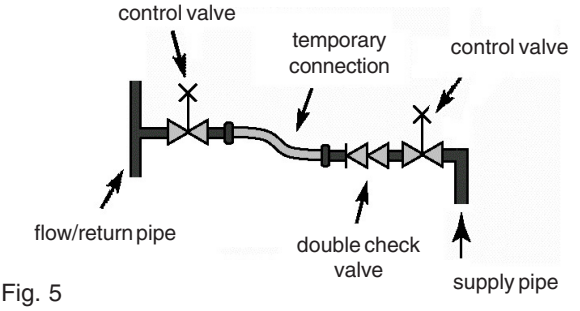

Fig. 5

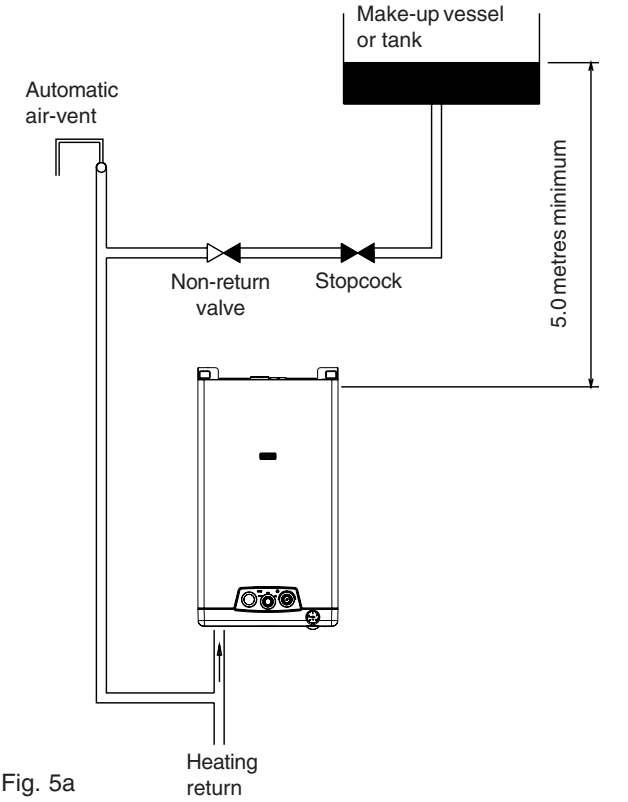

Fig. 5a

3A.6.7 LOW PRESSURE SEALED SYSTEM

An alternative method of filling the system would be from an independent make-up vessel or tank mounted in a position at least 1-metre above the highest point in the system and at least 5-metres above the boiler (see fig. 5A).

The cold feed from the make-up vessel or tank must be fitted with an approved non-return valve and stopcock for isolation purposes. The feed pipe should be connected to the return pipe as close to the boiler as possible.

3A.6.8 FREQUENT FILLING

Frequent filling or venting of the system may be indicative of a leak. Care should be taken during the installation of the appliance to ensure all aspects of the system are capable of withstanding pressures up to at least 3 bar.

3A.7 ELECTRICAL SUPPLY

The appliance is supplied for operation on 230V @ 50Hz electrical supply; it must be protected with a 3-amp fuse. The method of connection to the mains electricity supply must allow for complete isolation from the supply. The preferred method is by using a double-pole switch with a contact separation of at least 3mm. The switch must only supply the appliance and its corresponding controls, i.e. time clock, room thermostat, etc.

3A.8 MOUNTING ON A COMBUSTIBLE SURFACE

If the appliance is to be fitted on a wall of combustible material, a sheet of fireproof material must protect the wall.

3A.9 TIMBER FRAMED BUILDINGS

If the appliance is to be fitted in a timber framed building, it should be fitted in accordance with I.S. 813 and local Building Regulations.

The Institute of Gas Engineers publication (IGE/UP/7) 'Guide for Gas Installations in Timber Frame Buildings' gives specific advice on this type of installation.

3A.10 INHIBITORS

Vokera recommend that an inhibitor - suitable for use with copper heat exchangers - is used to protect the boiler and system from the effects of corrosion and/or electrolytic action. The inhibitor must be administered in strict accordance with the manufacturers instructions*.

*Water treatment of the complete heating system - including the boiler - should be carried out in accordance with I.S. 813 and the Domestic Water Treatment Association's (DWTA) code of practice.

3A.11 DECLARATION OF CONFORMITY

A Declaration of Conformity (as defined in I.S. 813) must be provided on completion of the installation.

A copy of the declaration must be given to the responsible person and also to the gas supplier if required.

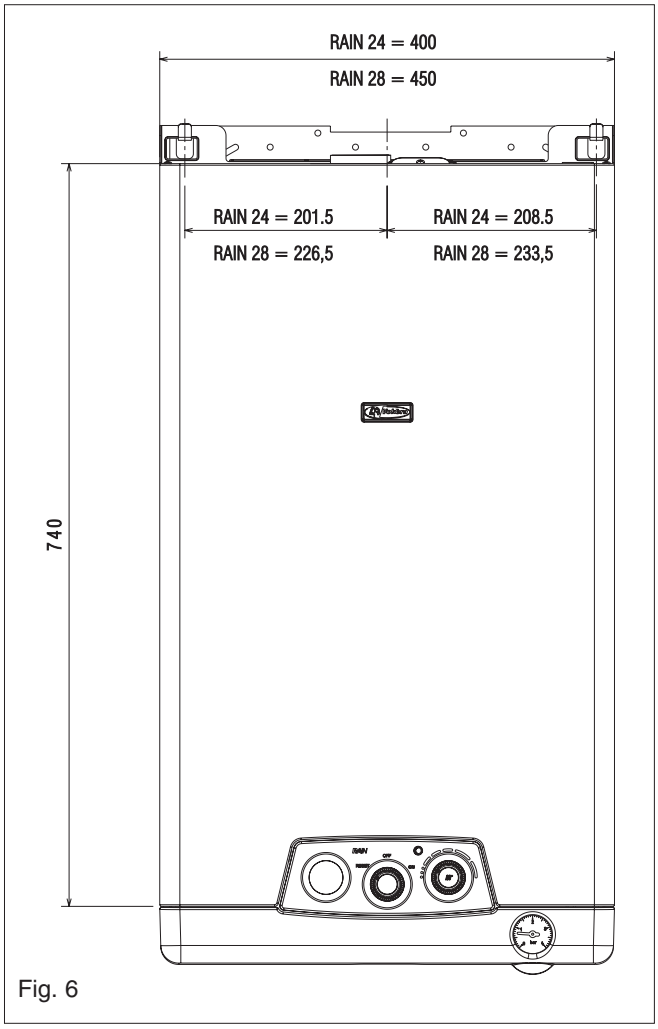

Fig. 6

External installation

Fig. 7

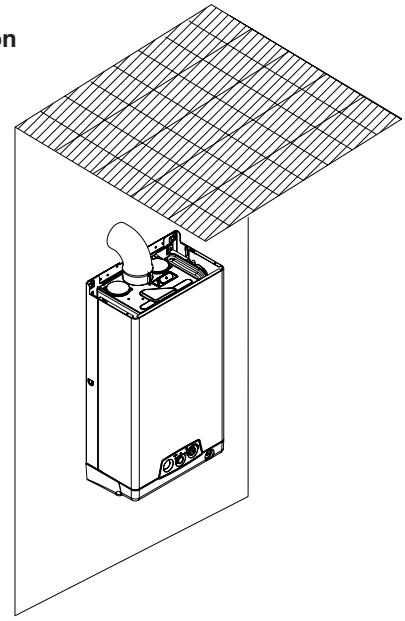

Internal installation

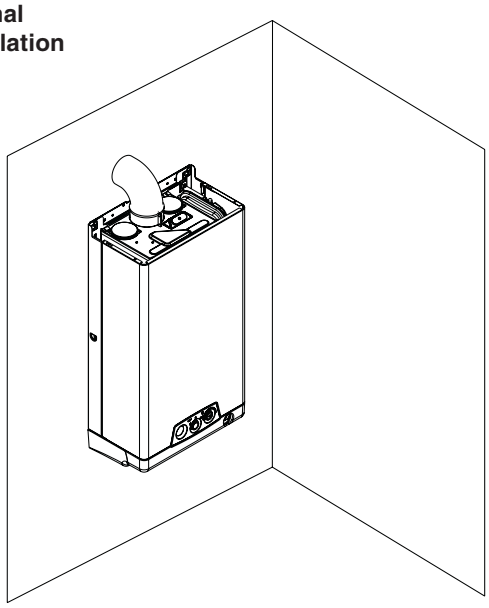

Rain bi Boiler

Fig. 7A

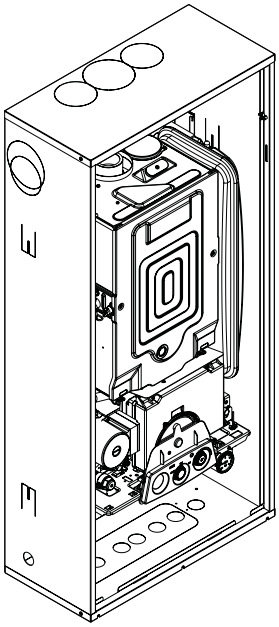

4.1 DELIVERY

Due to the weight of the appliance it may be necessary for two people to lift and attach the appliance to its mounting. The appliance is contained within a heavy-duty cardboard carton. Lay the carton on the floor with the writing the correct way up. The appliance enclosure (if required) is also supplied within a heavy-duty cardboard carton.

4.1.2 RAIN APPLICATION

The 'Rain' can be installed within the property or external to the property. Although the appliance is certified IPx5D, if it's to be installed externally, it may be necessary to use the rain-cover (not supplied) and provide reasonable protection from heavy or persistent rain (see fig. 7). Alternatively, the appliance enclosure (see figs. 1 & 7A) can be used (not supplied).

4.1.3 RAIN bi APPLICATION

The 'Rain bi' must be installed within the purpose made enclosure (not supplied) see figs. 1 & 7A.

4.2 CONTENTS (appliance carton)

Contained within the carton is:

- the appliance
- the documentation
- service valves & accessories
- flue restrictors
- appliance template
- appliance wall bracket.

4.3.1 UNPACKING

At the top of the carton pull both sides open - do not use a knife - unfold the rest of the carton from around the appliance, carefully remove all protective packaging from the appliance, and lay the accessories etc. to one side. Protective gloves should be used to lift the appliance, the appliance back-frame should be used for lifting points.

4.3.2 PREPARATION FOR MOUNTING THE APPLIANCE (external application)

The appliance and/or the appliance enclosure should be mounted on a smooth, vertical, non-combustible surface, which must be capable of supporting the full weight of the appliance and/or enclosure. Care should be exercised when determining the position of the appliance with respect to hidden obstructions such as pipes, cables, etc. When the position of the appliance has been decided - using the template supplied - carefully mark the position of the wall-mounting bracket (see fig. 6) and flue-hole (if applicable).

4.3.3 IMPORTANT

The Rain/Rain bi can be used on various applications (4.1.2). The following instructions relate to external applications, i.e. external to the property or dwelling.

4.4.1 EXTERNAL APPLICATIONS USING THE ENCLOSURE

Both the Rain and Rain bi boilers can be used with the enclosure. The Enclosure has been designed to be recessed into an external wall or surface to give a flush finish. It can however, be mounted onto an external wall if required.

Should this application be preferred, it's recommended that any openings on the top of the enclosure are sealed with a suitable silicone sealant in order to minimise the ingress or rainwater.
The use of the enclosure allows the installation pipework to be installed prior to the appliance being installed.
Due to the enclosure being installed external to the property, the flueing arrangements for the appliance can be simplified.

PREPARATION

Refer to the enclosure instructions (supplied) for specific installation instructions and details on the required size of opening.

The enclosure is supplied with 'knock-out' panels that allow the appliance flue outlet to routed to the left, right, or vertically.

In addition, the flue can be routed through the front of the enclosure.

The route and termination of the flue outlet must be considered prior to the installation of the enclosure.

Refer to the relevant sections within this installation booklet and the enclosure instructions for guidance, and Install the pipework and electrical supply prior to the fixing of the enclosure. Additionally, if the flue system is to be routed within the fabric of the property, then it's advisable to carry this out before fitting the enclosure.

At this point it will be necessary to remove the 'knock-out' panels that are specific to the route of the flue system and pipework.

FIXING

Secure the enclosure to the wall using the relevant fixing points, taking care to ensure that it is level and corresponds to the pre-installed pipework and/or flue system.

Alternatively the enclosure can be secured to an external wall by modifying the rear panel to accept fixing screws or bolts.

MOUNTING THE APPLIANCE

Mount the appliance onto the enclosure as indicated in the enclosure instructions.

4.4.2 EXTERNAL APPLICATIONS WITHOUT THE ENCLOSURE

The Rain boiler can be installed without the requirement of an enclosure providing that some form of protection is used to minimise the risk of water penetration into the appliance (see 4.1.2).

NOTE

The Rain bi must always be installed within an enclosure.

PREPARATION

Using the template and details at figure 6 as a guide, secure the appliance wall bracket to the external wall and mount the appliance to the wall bracket.

NOTE

The fixing holes for the wall-mounting bracket should be drilled and plugged, and an appropriate type and quantity of fixing should be used to ensure that the bracket is mounted securely.

4.5 FITTING THE FLUE

The Vokera Uni-flue (concentric) system and the 80mm + 80mm parallel (twin) flue system can be used with the appliance enclosure, whilst the standard 60/100mm Uni-flue horizontal terminals can be used on external installations where the enclosure has not been installed.

In addition the B22 kit can be used on those enclosure applications that require a simple flue arrangement. The B22 kit allows air to be taken from the ventilated enclosure, directly into the appliance and eliminates the need for an air inlet pipe.

The flue pipe/system can reach temperatures in excess of 150 °C, and therefore must be insulated or protected to eliminate the risk of injury or damage to property.

You must ensure that the entire flue system is properly supported and connected.

FLUE RESTRICTOR RING

To ensure maximum efficiency and correct operation of the appliance, it may be necessary to fit one of the supplied flue restrictor rings (see fig. 10, item 'A') to the appliance flue outlet (see tables below).

24

Total flue length	Restrictor required
Less than 1 metre	42mm diameter
Less than 2 metres	44mm diameter
Less than 3 metres	46mm diameter
Less than 4.25 metres	Not required

28

Total flue length	Restrictor required
Less than 0.75 metre	45mm diameter
Less than 1.70 metres	47mm diameter
Less than 2.70 metres	49mm diameter
Less than 3.40 metres	Not required

4.5.1 CONCENTRIC HORIZONTAL FLUE

(For concentric vertical flue, see section 4.5.2).

(For twin flue applications, see section 4.5.3).

For internal applications, this appliance must only be used with the standard 60/100mm Uni-flue concentric flue system or the Vokera parallel (twin) system.

NOTE

These instructions relate **only** to the standard 60/100mm concentric flue terminals (2359029 & 2359119).
The appliance flue outlet elbow can be rotated through 360° on its vertical axis. In addition the flue may be extended from the outlet elbow in the horizontal plane (see 2.9).

Horizontal flue terminals and accessories

Part No.	Description	Min-Max Length
2359029	Standard flue kit	833mm (dimension 'X')
2359119	Telescopic flue kit	N/A

The concentric flue pipe should have a fall from the boiler, to eliminate the possibility of rainwater entering the appliance via the flue.

4.5.1.1 FITTING THE HORIZONTAL FLUE KIT (enclosure applications)

Determine the route of the flue pipe and carefully measure the distance from the centre of the appliance flue outlet to the outside face of the enclosure (dimension 'X' see fig. 7). Ensure the inner (60mm) pipe is fully inserted into the outer (100mm) pipe (when the inner pipe is fully inserted, it stands proud of the outer pipe by 7.5mm). Add 32mm to dimension 'X' to give the overall flue length (dimension 'Y').

NOTE

The standard horizontal flue kit (part no. 2359029) is suitable for a distance (dimension 'Y') of up to 865mm.

The telescopic flue kit (part no. 2359119) is suitable for a distance (dimension 'Y') of up to 600mm.

Dimension 'Y' is measured from the end of the terminal to the end of the outer (100mm) pipe.

The internal trim should be fitted to the flue pipe before connection of the 90º bend

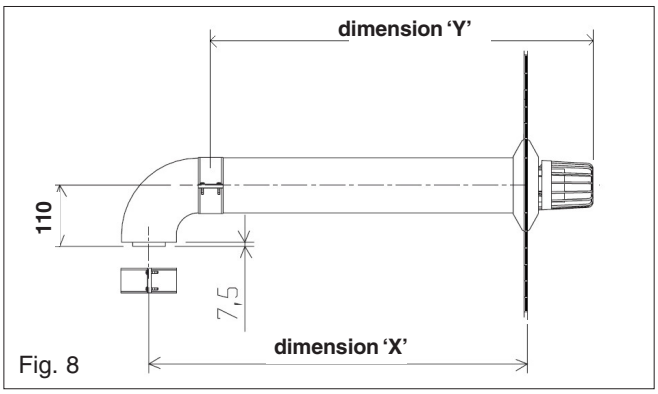

Fig. 8

If the horizontal flue kit (2359029) requires to be cut to the correct size (dimension 'Y'), you must ensure that the inner (60mm) pipe stands proud of the outer (100mm) pipe by 7.5mm (see fig. 8). Ensure any burrs are filed or removed and that any seals are located properly before assembly. The telescopic flue terminal should be adjusted to the appropriate length and then fixed using the securing screw supplied.

The knock-out panel should now be removed to allow passage of the flue pipe.

4.5.1.2 STANDARD FLUE KIT (2359029)

Hold the inner (60mm) pipe of the terminal assembly and connect to the push-fit end of the 90º bend (supplied) using a twisting action. Insert the assembled flue through the enclosure hole. Using the clips & screws supplied, connect the flue assembly to the boiler, ensuring that the terminal protrudes past the outside surface of the enclosure by the correct length (135mm).

4.5.1.3 TELESCOPIC FLUE KIT (2359119)

Connect the 60mm push-fit connection of the flue bend (supplied) to the telescopic flue assembly using a twisting action. Insert the assembled flue through the enclosure hole. Using the clips & screws supplied, connect the flue assembly to the boiler, ensuring that the terminal protrudes past the outside surface of the enclosure by the correct length (135mm).

4.5.1.4 EXTERNAL APPLICATIONS WITHOUT THE ENCLOSURE

Vokera recommend that the B22 kit is used on Rain boilers that are installed external to the property or dwelling (see fig 8A & 8B).

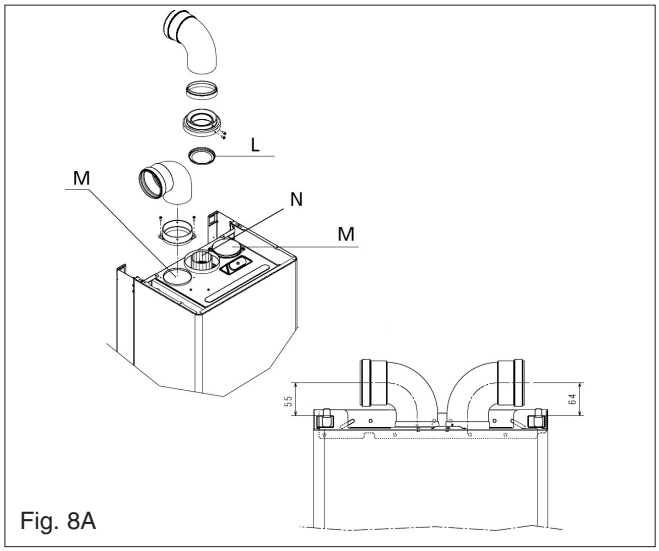

Fig. 8A

- Insert the required flue restrictor ring (L) into the flue spigot (if not already fitted)
- Insert the exhaust connection manifold onto the appliance flue outlet (N)
- Using the hole in the exhaust connection manifold as a guide, drill a 3mm hole in the appliance flue spigot and secure the exhaust manifold connection to the flue spigot using the screw provided
- Place the silicone seal (supplied with twin adapter kit) over the rim of the exhaust connection manifold
- Remove the required blanking plate ('M' - located to the left and right of the appliance flue outlet) and - using the same screws - install the air baffle
- Using the hole in the exhaust connection manifold as a guide, drill a 3mm hole in the appliance flue spigot and secure the exhaust manifold connection to the flue spigot using the screw provided
- Connect the exhaust flue outlet terminal to the exhaust elbow and secure to the wall with the wall bracket (supplied)
- Insert the air inlet terminal to the air inlet elbow.

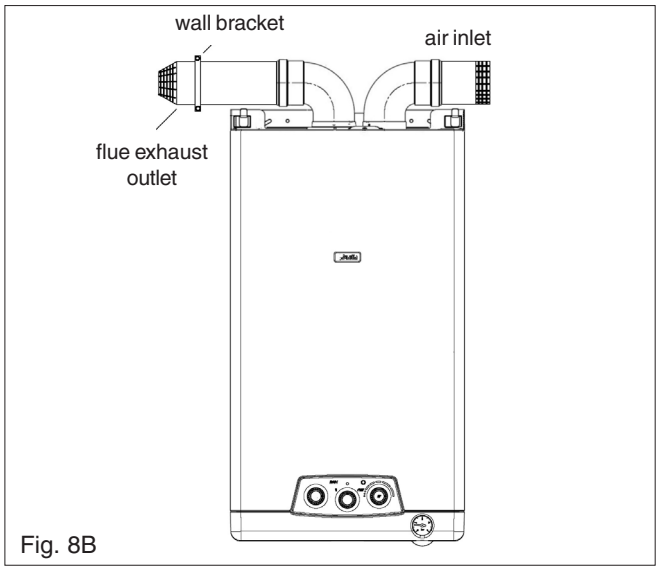

Fig. 8B

4.5.2 CONCENTRIC VERTICAL FLUE

The Rain/Rain bi appliance can be used with the standard 60/100mm concentric vertical terminal. For further details on vertical terminations, please contact the Vokera technical help-line.

4.5.3 VOKERA TWIN FLUE APPLICATION

The Rain/Rain bi appliance can be used with the Vokera twin flue system. For further details on this type of application, please contact the Vokera technical help-line.

4.6 CONNECTING THE GAS AND WATER

The appliance is supplied with an accessories pack that contains sealing washers and service valves. The service valves are of the compression type. When connecting pipe work to the valves, tighten the compression end first then insert the sealing washers before tightening the valve to the appliance.

NOTE

It will be necessary to hold the valve with one spanner whilst tightening with another.

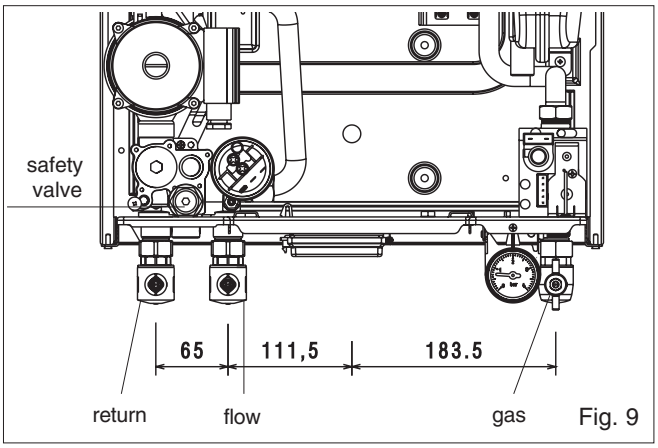

Fig. 9

4.6.1 GAS (fig. 9)

The appliance is supplied with a 15mm service valve, connect a 15mm pipe to the inlet of the valve and tighten both nuts.

NOTE

It will be necessary to calculate the diameter of the gas supply pipe to ensure the appliance has an adequate supply of gas.

4.6.2 FLOW & RETURN (fig. 9)

The appliance is supplied with 22mm service valves for the flow and return connections, connect a 22mm pipe to the inlet of each valve and tighten both nuts.

4.6.3 SAFETY VALVE (fig. 9)

Connect the safety valve discharge pipe to the safety valve outlet and tighten. The discharge pipe must have a continuous fall away from the appliance to outside and allow any water to drain away thereby eliminating the possibility of freezing. The discharge pipe must terminate in a position where any water - possibly boiling - discharges safely without causing damage or injury, but is still visible.

4.7 ELECTRICAL CONNECTIONS

The electrical supply must be as specified in 3.7/ 3.7a. The appliance is supplied, pre-wired with a 1.0 metre length of flex, connect the wires as follows:

- connect the Brown wire to the L (Live) terminal of the plug or fused isolator
- connect the Blue wire to the N (Neutral) terminal of the plug or fused isolator
- connect the Green/Yellow wire to the E (Earth) terminal of the plug or isolator
- ensure the plug or fused isolator is fitted with a 3AMP fuse.

If this method of connection is unsuitable, please refer to section 8. A qualified electrician should connect the electrical supply to the appliance. If controls - external to the appliance - are required, a competent person must undertake the design of any external electrical circuits, please refer to Section 8 for detailed instructions. ANY EXTERNAL CONTROL OR WIRING MUST BE SERVED FROM THE SAME ISOLATOR AS THAT OF THE APPLIANCE. The supply cable from the isolator to the appliance must be 3-core flexible sized 0.75mm to BS 6500. Wiring to the appliance must be rated for operation in contact with surfaces up to 90 °C.

Fig. 10

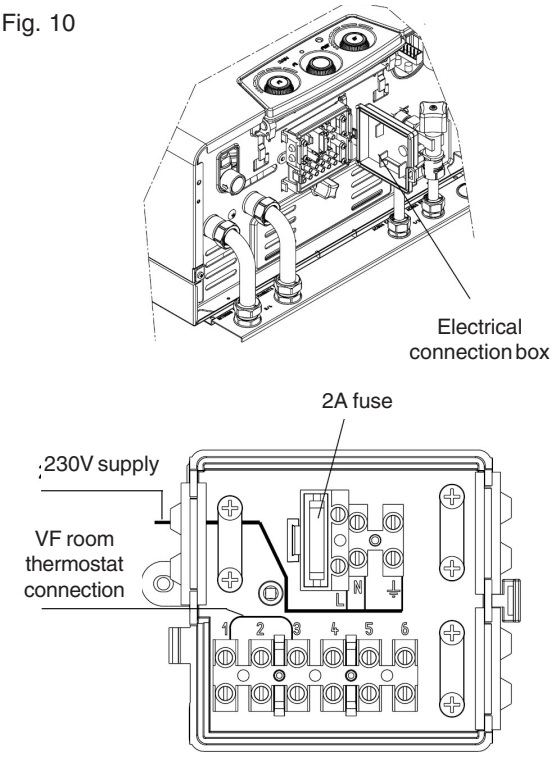

4.8.1 ELECTRICAL CONNECTION

The appliance terminal strip is located beneath the appliance control panel (see fig. 10). Locate and remove the screw that secures the electrical connection box cover.

NOTE

The appliance comes with a factory fitted link (terminals 1 & 3) to allow basic operation of the boiler via the selector switch. If external controls are required please refer to the wiring diagrams in section 8 for more detailed information.

4.8.2 CONNECTING THE MAINS (230V) INPUT (see fig. 10)

Remove the connection box cover as described in 4.8.1. Pass the cable through the cable anchorage. Connect the supply cable wires (earth,

live and neutral) to their corresponding terminals on the terminal strip. Ensure that the EARTH wire is left slightly longer that the others, this will prevent strain on the Earth wire should the cable become taut.
Do not remove the link Do not remove the link wire (between terminals 1 & 3) unless additional external controls are to be fitted (see section 8).
Re-fit the electrical connection cover. The securing screw on the cable anchorage must be tightened before the connection cover is replaced.

4.9.1 INTERNAL ACCESS (fig. 10A)

To gain internal access to the appliance, it's necessary to remove the appliance casing (Rain only) and the control panel securing screw (see fig. 10A).

Locate and remove the 2-screws (A) that secure the appliance casing (Rain only) and gently ease and lift away the casing from the appliance.

Locate and remove the control panel securing screw (see fig. 10B) and push down on clip 'C' to release the control panel.

Fig. 10A

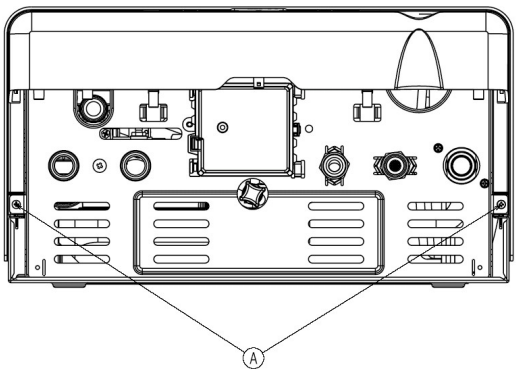

Fig. 10B

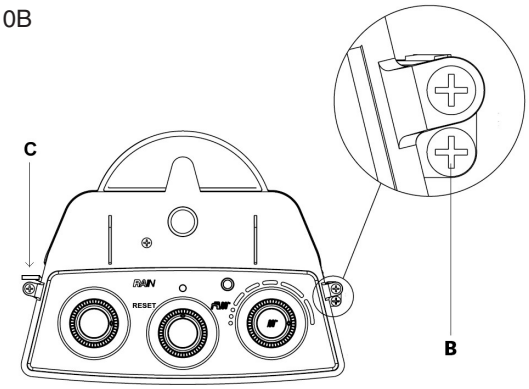

SECTION 5 COMMISSIONING

5.1 GAS SUPPLY INSTALLATION

Inspect the entire installation including the gas meter, test for soundness and purge. Refer to I.S. 813 for specific instruction.

5.2 THE HEATING SYSTEM

The appliance contains components that may become damaged or rendered inoperable by oils and/or debris that are residual from the installation of the system, consequently it is essential that the system be flushed in accordance with the following instructions.

5.3 INITIAL FILLING OF THE SYSTEM

Ensure both flow and return service valves are open, remove appliance casing as described in 4.8.3, identify the automatic air release valve and loosen the dust cap by turning the cap anti-clockwise one full turn. IMPORTANT, THERE ARE NO MANUAL AIR RELEASE VALVES LOCATED ON THE APPLIANCE. Ensure all manual air release valves located on the heating system are closed. Using the method of filling as described in fig. 5, slowly proceed to fill the system. As water enters the system the pressure gauge will begin to rise. Once the gauge has reached 1 BAR close the filling valve and begin venting all manual air release valves, starting at the lowest first. It may be necessary to go back and top-up the pressure until the entire system has been filled. Inspect the system for water soundness, rectifying any leaks.

5.4 INITIAL FLUSHING

The whole of the heating system must be flushed as detailed in 5.8. Open all radiator or heating valves and the appliance flow & return service valves. Drain the boiler and system from the lowest points. Open the drain valve full bore to remove any installation debris from the boiler prior to lighting. Refill the boiler and heating system as described in 5.3.

5.5 PRE-OPERATION CHECKS

Before attempting the initial lighting of the appliance, the following checks must be carried out:

- ensure all gas service valves from the meter to the appliance are open and the supply pipe has been properly purged
- ensure the proper electrical checks have been carried out, (see 7.7) particularly continuity, polarity, and resistance to earth
- ensure the 3 AMP fuse - supplied with the appliance - has been fitted
- ensure the system has been filled, vented and the pressure set to 1 BAR
- ensure the flue system has been fitted properly and in accordance with the instructions
- ensure all appliance service valves are open.

5.6 INITIAL LIGHTING

Ensure the electrical supply to the appliance is switched on. Switch the time clock or programmer (if fitted) to an 'on' position and ensure all external controls are also calling for heat. Turn the mode selector knob to the 'on' position (fig. 1). The appliance will now go through an ignition sequence as described in 1.2. Should the appliance fail to ignite, refer to 5.5 and/or section 7 (fault-finding).

5.7 CHECKING THE BURNER PRESSURE

Although the burner pressure is factory set, it is necessary to check it during commissioning.

Isolate the appliance from the electrical supply and attach a suitable manometer to the gas valve outlet test nipple (see fig. 11). Light the boiler as described in 5.6 and compare the reading on the manometer with the value described in section 2. If adjustment is required, follow the detailed instructions in section 7 (7.3).
Once the burner pressure has been checked, isolate the appliance from the electrical supply, remove the manometer, and tighten the gas valve outlet test nipple

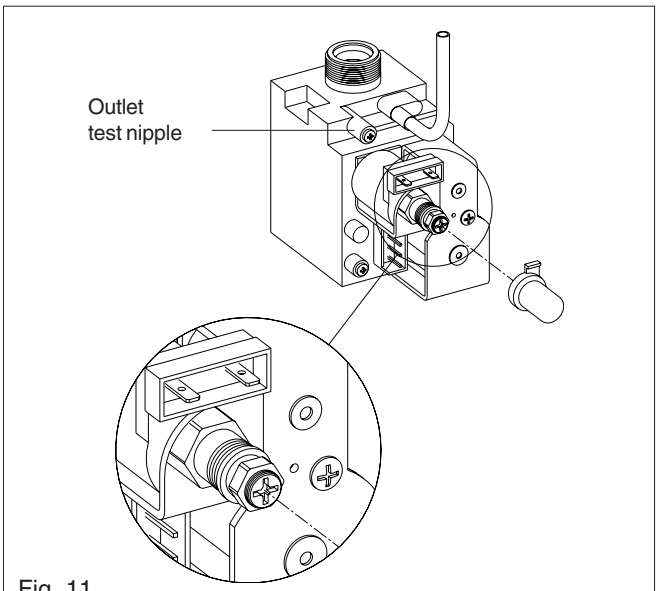

Fig. 11

5.8 FINAL FLUSHING OF THE HEATING SYSTEM
The system shall be flushed in accordance with I. S. 813 and the DWTA Code of Practice. If a cleanser is to be used, it must be suitable for low water content, copper heat exchangers. It shall be from a reputable manufacturer and shall be administered in strict accordance with the manufacturing instructions.

5.8.1 INHIBITORS
See section 3A.9.

5.9 SETTING THE BOILER OPERATING TEMPERATURE
The flow outlet temperature can be adjusted between 40 ºC - 80 ºC via the thermostat knob (see fig.1).

5.10 SETTING THE SYSTEM DESIGN PRESSURE
The design pressure should be a minimum of 1 BAR and a maximum of 1.5 BAR.

The actual reading should ideally be 1BAR plus the equivalent height in metres (0.1 BAR = 1 metre) to the highest point in the system above the base of the appliance (up to the maximum of 1.5 BAR total).

N.B. The safety valve is set to lift at 3 BAR/30 metres/45 psig.

To lower the system pressure to the required value, pull lever on head of safety valve to release water until the required figure registers on the pressure gauge (see fig. 1).

5.11 REGULATING THE CENTRAL HEATING SYSTEM
Fully open all radiator and circuit valves and run the appliance for both heating and hot water until heated water is circulating. If conditions are warm remove any thermostatic heads. Adjust radiator return valves and any branch circuit return valves until the individual return temperatures are correct and are approximately equal.

5.12 FINAL CHECKS
- ENSURE ALL TEST NIPPLES ON THE APPLIANCE GAS VALVE HAVE BEN TIGHTENED AND CHECKED FOR SOUNDNESS.
- ENSURE THE APPLIANCE FLUE SYSTEM IS FITTED CORRECTLY AND IS PROPERLY SECURED.
- ENSURE ALL PIPE WORK IS RE-CHECKED FOR SOUNDNESS.
- RE-FIT APPLIANCE CASING.
- CLOSE AND LOCK ENCLOSURE DOOR.

5.13 INSTRUCTING THE USER
Hand over all documentation supplied with this appliance - including these instructions - and explain the importance of keeping them in a safe place.

Explain to the user how to lock/unlock the enclosure door, how to isolate the appliance from the gas, water and electricity supplies and the locations of all drain points.

Show the user how to operate the appliance and its associated controls correctly.

Show the user the location of the filling valve and how to top-up the system pressure correctly and show the location of all manual air release points.

Explain to the user how to turn off the appliance for both long and short periods and advise on the necessary precautions to prevent frost damage.

Explain to the user that for continued safe and efficient operation, the appliance must be serviced annually by a competent person.

6.1 GENERAL

To ensure the continued safe and efficient operation of the appliance, it is recommended that it is checked and serviced at regular intervals.

The frequency of servicing will depend upon the particular installation conditions, but in general, once per year should be adequate.

It is the law that any servicing work is carried out by competent person such as a Vokera engineer, an approved service agent or Bord Gais.

The following instructions apply to the appliance and its controls, but it should be remembered that the central heating and the domestic hot water systems will also require attention from time to time.

6.2 ROUTINE ANNUAL SERVICING

Check the operation of the appliance and ensure it functions as described in section 7. Compare the performance of the appliance with its design specification. The cause of any noticeable deterioration should be identified and rectified without delay.

Thoroughly inspect the appliance for signs of damage or deterioration especially the flue system and the electrical apparatus.

Check and adjust - if necessary - all burner pressure settings (see section 7.3).

Check and adjust - if necessary - the system design pressure (see section 5.10).

Carry out an analysis of the flue gases (see 7.4) and visually check the condition of the entire flue assembly. Compare the results with the appliance design specification. Any deterioration in performance must be identified and rectified without delay.

Ensure both flue venturis are clean and free from any debris or obstruction.

Ensure both the burner and heat exchanger are clean and free from any debris or obstruction.

Inspect all joints for signs of leakage and repair if necessary.

Refer to the commissioning section and/or replacement of parts section for detailed instruction if required.

6.3 REPLACEMENT OF COMPONENTS

Although it is anticipated that this appliance will give years of reliable, trouble free service, the life span of components will be determined by factors such as operating conditions and usage. Should the appliance develop a fault, the fault finding section will assist in determining which component is malfunctioning.

6.4 COMPONENT REMOVAL PROCEDURE

To remove a component, access to the interior of the appliance is essential. Isolate the appliance from the electrical supply and remove the fuse. And when necessary, close all service valves on the appliance, remove the appliance casing as described in section 4.8.3, drain the water content from the appliance via the appliance drain valve or safety valve. Ensure some water absorbent cloths are available to catch any residual water that may drip from the appliance or removed component. Undertake a complete commissioning check as detailed in section 5, after replacing any component. **ALWAYS TEST FOR GAS SOUNDNESS IF ANY GAS CARRYING COMPONENTS HAVE BEEN REMOVED OR DISTURBED.**

7.1 CHECKING APPLIANCE OPERATION

When carrying out any repairs or servicing to the appliance, the relevant commissioning procedure must be undertaken to ensure the continued safe operation of the appliance. Particular attention should be made to ensure gas soundness, water soundness, and the electrical integrity of the appliance.

7.2 APPLIANCE MODE OF OPERATION

NOTE

There must be sufficient system water pressure (min. 0.5 bar) to ensure the water pressure switch is activated. If there is insufficient system pressure the pump and fan will be prevented from operating.

7.2.1 SELECTOR SWITCH IN THE 'OFF' POSITION

When the selector switch is in the OFF position, the Green LED status indicator will flash every 6-seconds to confirm the appliance is in standby mode. The appliance will not respond to any heating requests.

Active functions:

- frost-protection system
- pump anti-block
- fan over-run.

7.2.2 SELECTOR SWITCH IN THE 'ON' POSITION

When the selector switch is in the ON position, the Green LED is illuminated:

- flashing every 6-seconds if no Heat and/or hot water request is active
- constant during a heat and/or hot water request.

Active functions:

- frost-protection system
- pump anti-block
- fan/pump over-run.

7.2.3 APPLIANCE FUNCTIONS

- **Frost-protection:** this function is only active when there are no requests for heating and/or hot water. When the temperature of the primary thermistor drops below 5 °C, the boiler will operate on minimum power until the temperature of the primary thermistor reaches 35 °C. Thereafter the pump will over-run for 30-seconds.
- **Anti-block cycle:** when there has been no heating or hot water request for 19-hours, the anti-block cycle is activated and the pump will be activated for a period of 30-seconds.
- **Fan over-run:** should the temperature of the NTC thermistor exceed 78 °C after a heating or hot water request, the pump and/or fan will run for a period of 30-seconds.
- **SARA function:** the SARA function permits the boiler (when the set-point is within the SARA range) to automatically adjust (raise) the flow outlet temperature should the room thermostat contacts remain closed for more that 20-minutes.

7.2.4 HEATING MODE (fig. 12A)

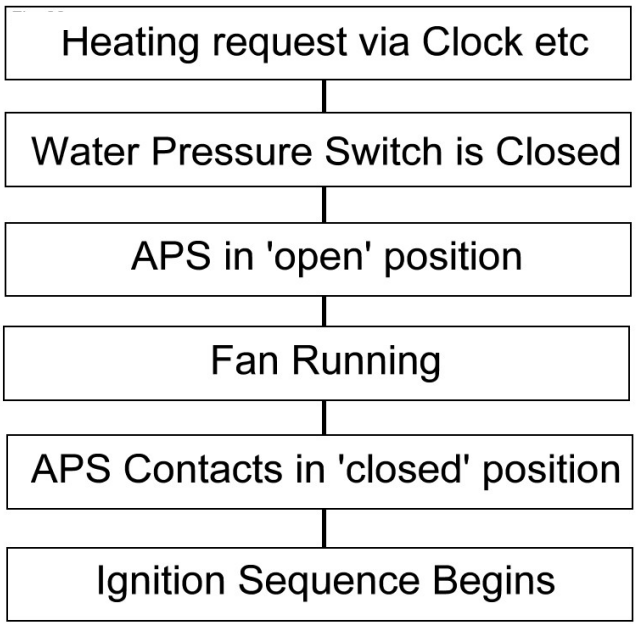

Fig. 12A

With the selector switch in the ON position and the relevant controls (time clock, room thermostat, etc,) are calling for heat, the appliance will operate and the pump and fan will be active. The operation of the fan causes the air pressure switch to deliver a signal voltage to the control PCB. A slow ignition sequence is enabled, whereby the current supplied to the gas valve modulating coil is progressively increased from minimum to maximum over a period of 8-seconds. During this period the ignition electrode sparks continuously even if the burner has ignited. Ignition is sensed by the electronic circuitry to ensure flame stability at the burner. Once successful ignition has been achieved, the electronic circuitry allows 75% 0f the full gas rate through the appliance. After 15 minutes the gas rate is increased to maximum (100%).

NOTE

If the spark/sensing electrode does not sense ignition the appliance will then go to lockout. When the set-point has been reached (the position of the heating temperature selector) as measured at the primary thermistor, the appliance will begin the modulation phase whereby the fan and gas valve will continuously modulate to maintain the set-point.

If the temperature continues to rise and exceeds the set-point by 6°C, the burner will shut down and the boiler will perform a three-minute anti-cycle (timer delay).

A new ignition sequence will be enabled when the 3-minute anti-cycle has been performed and the temperature at the primary thermistor has dropped 6 °C below the set-point.

NOTES
The timer delay can be de-activated by the insertion of a 'jumper' on the PCB at JP2 (fig.14) or by isolating the appliance from the electrical supply for 30 seconds.
When the request for heating and/or hot water has been satisfied, the appliance pump and fan may continue to circulate to dissipate any residual heat within the appliance.

NOTE
If the spark/sensing electrode does not sense ignition the appliance will then go to lockout

7.2.5 HEATING PARAMETERS

RANGE	MINIMUM	MAXIMUM
Temperature (°C)	40	80
1ST sector	40	55
SARA sector	55	65
3RD sector	65	80

When the boiler is operating in the SARA range, the Green LED flashes rapidly to signify the SARA function is active.

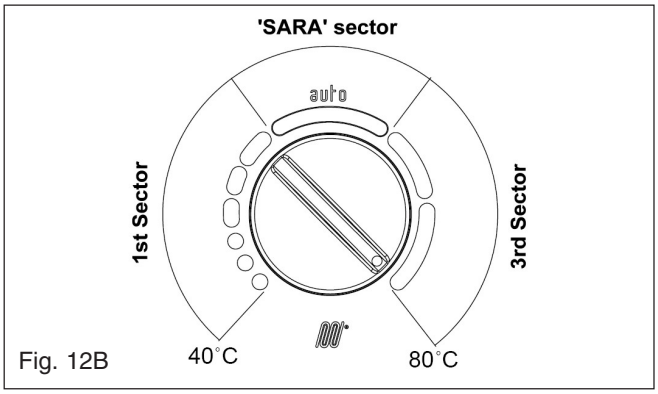

Fig. 12B

SARA FUNCTION (fig. 12B)
When the heating temperature selector is set within the SARA range (SARA sector) the boiler will automatically raise the heating flow outlet temperature by 5 °C every 20-minutes that the room thermostat contacts remain in the closed position or until the boiler reaches the maximum operating temperature.

7.3 CHECKING AND ADJUSTING BURNER PRESSURE (see fig. 13)

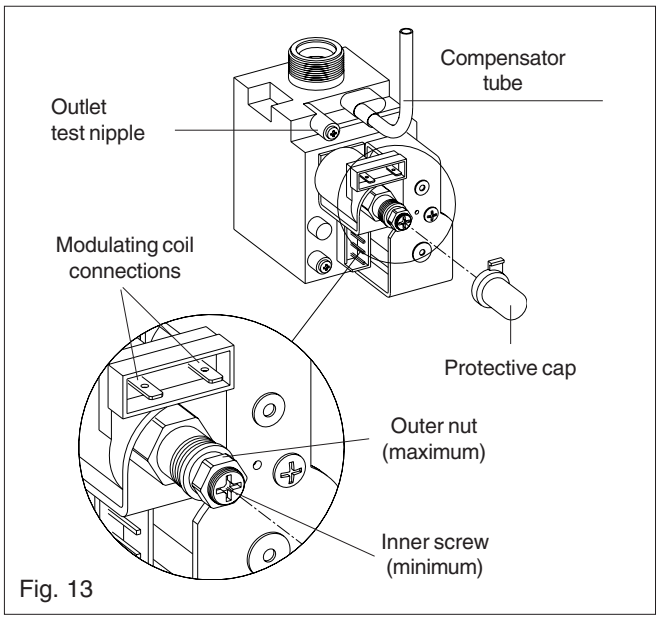

Fig. 13

Although the burner pressure is factory set, it is necessary to check it during servicing or if the gas valve has been removed.
Isolate the appliance from the electrical supply and attach a suitable manometer to the gas valve outlet test nipple. Remove the compensator tube.

7.3.1 SETTING THE MAXIMUM BURNER PRESSURE
Light the boiler as described in 5.6 and compare the reading on the manometer with the value described in 2.2. If adjustment is required, remove the protective cap from the gas valve modulating coil assembly and turn the outer (10mm) nut clockwise to increase, or counter-clockwise to decrease the burner pressure.

NOTE
You should ensure that all radiators or heat emitters are fully open during the above procedure. This will ensure that the output of the boiler (burner pressure) is not compromised due to a high flow temperature. It may be necessary to fit a jumper tag to the main PCB (JP2) in order to cancel the timing function for the 75% output at start up (see fig. 14).

7.3.2 SETTING THE MIMIMUM BURNER PRESSURE
Once the maximum burner pressure has been checked and/or adjusted, remove one of the grey wires from the modulating coil. Compare the reading on the manometer with the value described in 2.2. If adjustment is required, turn the inner (red) cross-head screw clockwise to increase, or counter-clockwise to decrease the burner pressure, whilst ensuring that the outer (10mm) nut does not move. When checking and/or adjustment has been completed, isolate the appliance from the electrical supply, replace the protective cap, refit the compensator tube, refit the grey wire to the modulating coil, remove the manometer, and tighten the outlet test nipple.
IMPORTANT, A GAS SOUNDNESS CHECK MUST BE CARRIED OUT.

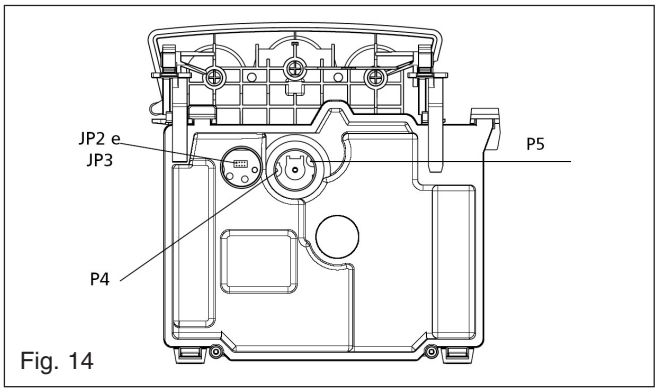

Fig. 14

7.4 COMBUSTION ANALYSIS TEST
A combustion analysis check can easily be carried out on the appliance via the test points located on the top of the appliance, however you must check that the burner pressures are set correctly (see section 7.3).

- Insert the flue gas analyser probe into the right hand test point (see fig. 15).

- Light the boiler as described in section 5.6.
- You should ensure that all radiators or heat emitters are fully open during the above procedure. This will ensure that the output of the boiler (burner pressure) is not compromised due to a high flow temperature. It may be necessary to fit a jumper tag to the main PCB (JP2) in order to cancel the timing function for the 75% output at start up (see fig. 14).
- Once the combustion analysis test has been completed, remove the test probe and replace the protective cap.

7.5 CHECKING THE EXPANSION VESSEL

Carry out the component removal procedure as described in 6.4. You must ensure that the boiler is completely drained of waterr.

Using a suitable pressure gauge, remove dust cap on expansion vessel and check the charge pressure. The correct charge pressure should be 0.8 BAR ± 0.1 BAR.

If the charge pressure is less, use a suitable pump to increase the charge.

NOTE

You must ensure the safety valve is in the open position whilst re-charging takes place. Replace the dust cap and carry out the relevant commissioning procedure (section 5).

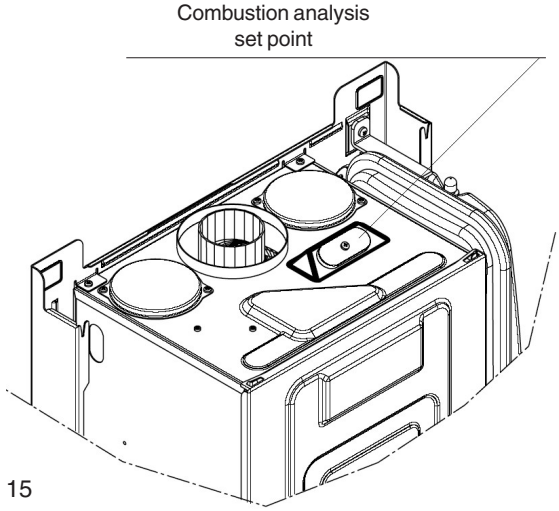

Fig. 15

7.6 EXTERNAL FAULTS

Before carrying out any fault-finding or component replacement, ensure the fault is not attributable to any aspect of the installation.

7.6.1 INSTALLATION FAULTS

Symptom	Possible causes
No ignition	Check external wiring Check external controls
No hot water	Check external controls
No central heating	Check external controls

GREEN LED

Frequency	Faults/Status
On every 6-secs	At stand-by with no faults
Flashing 8-times a second	SARA function active
On every 0.5-secs	Temporary fault, e.g.: ● APS fault ● low water pressure
Solid	Active heating/hot water request

YELLOW LED

Frequency	Faults/Status
Solid	Check JP1

RED LED

Frequency	Faults/Status
On every 0.5-secs	Final fault, e.g.: ● primary NTC ● water pressure ● fan/flue problem ● ignition/lockout problem
Solid	Limit thermostat

7.7 ELECTRICAL CHECKS

Any electrical checks must be carried out by a suitably qualified person.

7.7.1 EARTH CONTINUITY TEST

Isolate the appliance from the electrical supply, and using a suitable multi-meter carry out a resistance test. Connect test leads between an appliance earth point and the earth wire of the appliance supply cable. The resistance should be less than 1 OHM. If the resistance is greater than 1 OHM check all earth wires and connectors for continuity and integrity.

7.7.2 SHORT CIRCUIT CHECK

Isolate the appliance from the electrical supply, and using a suitable multi-meter, carry out a short circuit test between the Live & Neutral connections at the appliance terminal strip (fig.16).

Repeat above test on the Live & Earth connections at the appliance terminal strip (fig.16).

NOTE

Should it be found that the fuse has failed but no fault is indicated, a detailed continuity. Check will be required to trace the fault. A visual inspection of components may also assist in locating the fault.

7.7.3 POLARITY CHECK

With the appliance connected to the electrical supply and using a suitable multimeter, carry out the following voltage tests:

- Connect test leads between the Live & Neutral connections at the appliance terminal strip (fig.16). The meter should read approximately 230V ac. If so proceed to next stage. If not, see 7.7.4.
- Connect test leads between the Live & Earth connections at the appliance terminal strip (fig.16). The meter should read approximately 230V ac. If so proceed to next stage. If not, see 7.7.4.
- Connect test leads between the Neutral & Earth connections at the appliance terminal strip (fig.16). The meter should read approximately 0 – 15Vac. If so polarity is correct. If not, see 7.7.4.

7.7.4 REVERSED POLARITY OR SUPPLY FAULT

Repeat the above tests at the appliance isolator, if testing reveals correct polarity and/or supply at the isolator, re-check wiring and connections between the isolator and the appliance.

If tests on the isolator also reveal reversed polarity or a supply fault, consult the local electricity supplier for advice.

7.7.5 RESISTANCE TO EARTH CHECK

Isolate the appliance from the electrical supply, and using a suitable multi-meter carry out a resistance test. Connect test leads between the Live & Earth connections at the appliance terminal strip (fig.16). If the meter reads other than infinity there is a fault that must be isolated, carry out a detailed continuity check to identify the location of the fault.

7.8 FAULT FINDING

Before attempting any faultfinding, the electrical checks as detailed in 7.7 must be carried out. Isolate the appliance from the electrical supply. Disconnect any external controls such as room thermostats etc. from the boiler.

7.8.1 REPLACING THE MAIN PCB

When replacing the main PCB it's essential that the potentiometers are set as follows:

- **P4** - set at minimum
- **P5** - set at maximum.

EFFECT OF JUMPER TAGS FITTED TO THE MAIN PCB AT:

- **JP1** - Rain/Rain bi boiler
- **JP2** - cancels anti-cycle function and initial heating output (75% of maximum at start up)
- **JP3** - for LPG boilers only
- **JP4** - N/A.

NOTE

Restore the electrical supply to the boiler and turn the selector switch to the on position. The boiler should now function as described in section 7.2. Should the boiler fail to respond, the internal fuses and connectors should be checked to ensure integrity and continuity. If the boiler still fails to respond, refer to the detailed faultfinding flowcharts overleaf.

IMPORTANT

These series of checks must be carried out before attempting any fault-finding procedures on the appliance. On completion of any task that required the disconnection and re-connection of any electrical wiring or component, these checks must be repeated.

7.9 FAULT CODES

When the boiler is in a fault condition, the LED is displayed in a colour and/or frequency that is relevant to the fault. To reset the boiler, turn the mode selector switch to the reset position for 2-minutes' then back to the relevant mode of operation.

If the boiler does not reset, refer to the following section and the detailed faultfinding flowcharts overleaf.

YELLOW LED

Frequency	Faults/Status
Solid	Check JP1

RED LED

Frequency	Faults/Status
On every 0.5-secs	Final fault, e.g.: • primary NTC • water pressure • fan/flue problem • ignition/lockout problem
Solid	Limit thermostat

8.1 EXTERNAL WIRING

The appliance comes with a factory fitted link (fig. 16) to allow basic operation of the boiler via the mode selector switch. If external controls are to be added to the system, they must be connected to the boiler as shown in the following diagrams. For advice on controls that are not featured in this book, please contact Vokera technical on 0870 333 0520.

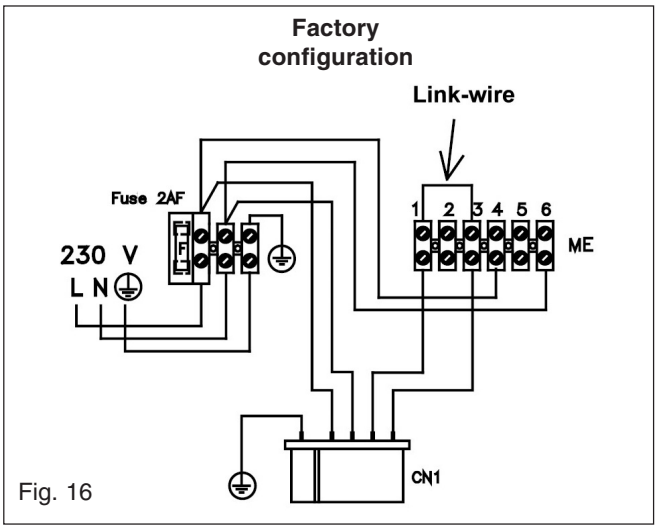

Fig. 16

8.2 TYPICAL CONTROL APPLICATIONS

The appliance can be used with the following controls:

- external single-channel, voltage-free time clocks
- voltage-free room thermostats
- voltage-free programmable room thermostats.

In addition, the appliance can be used in conjunction with a typical 'S'-Plan system, please contact Vokera technical for further detailed instruction.

NOTE

This appliance is not suitable for use with 'Y'-Plan systems.

8.3 ROOM THERMOSTAT

Should a room thermostat or external clock be required, it must be of the 'voltage-free' type, and should be connected to the appliance as shown in fig. 16A.

8.4 OTHER CONTROLS

Contact the controls manufacturer and/or Vokera technical department should you require more specific information on the suitability of a particular control.

Further guidance on the recommended practice for the installation of external controls, can be found in CHeSS – HC1/HC2 (www.energy-efficiency.gov.uk).

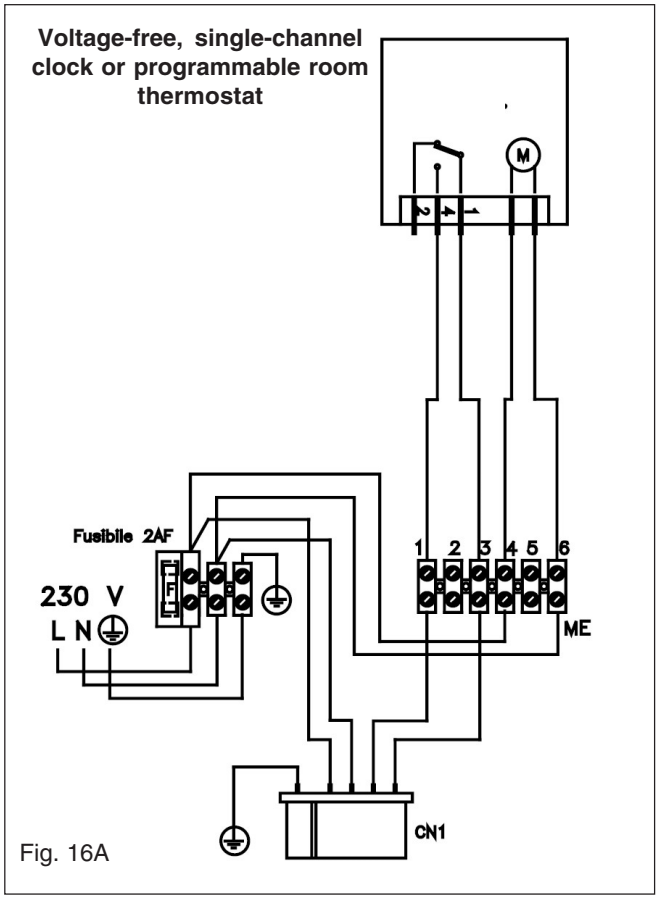

Fig. 16A

Key

P2	Central heating temperature control
P3	Off/summer/winter selector
R.T.	Room thermostat
P.S.	Pressure switch
D.P.S.	Differential pressure switch
H.L.T.	High limit thermostat
H.T.	Heat thermistor
P4-P5	Setting trimmer
JP1	C.H. only selector
JP2	Setting timer
JP3	Natural gas or L.P.G. selector
Fuse 2AF	External fuse 2AF (on 230V circuit)
F1 (CP04X)	Fuse 2AF (on 230 V circuit)
SP/SE. E.	Spark/Sense electrode
RL1	Pump relay
RL2	Fan relay
RL4	Ignition relay
LED	Led OK (green)
	Led alarm (red)
MOD	Modulator
F	Fan
P	Pump
OPE	Gas valve solenoids
CP04X	Control board
CN1-CN9	Connectors
TRF1	Trasformer
ACF01X	Ignition control board
ME	External terminal board

FUNCTIONAL DIAGRAM

NOTE: L-N-E CONNECTION IS ADVISABLE

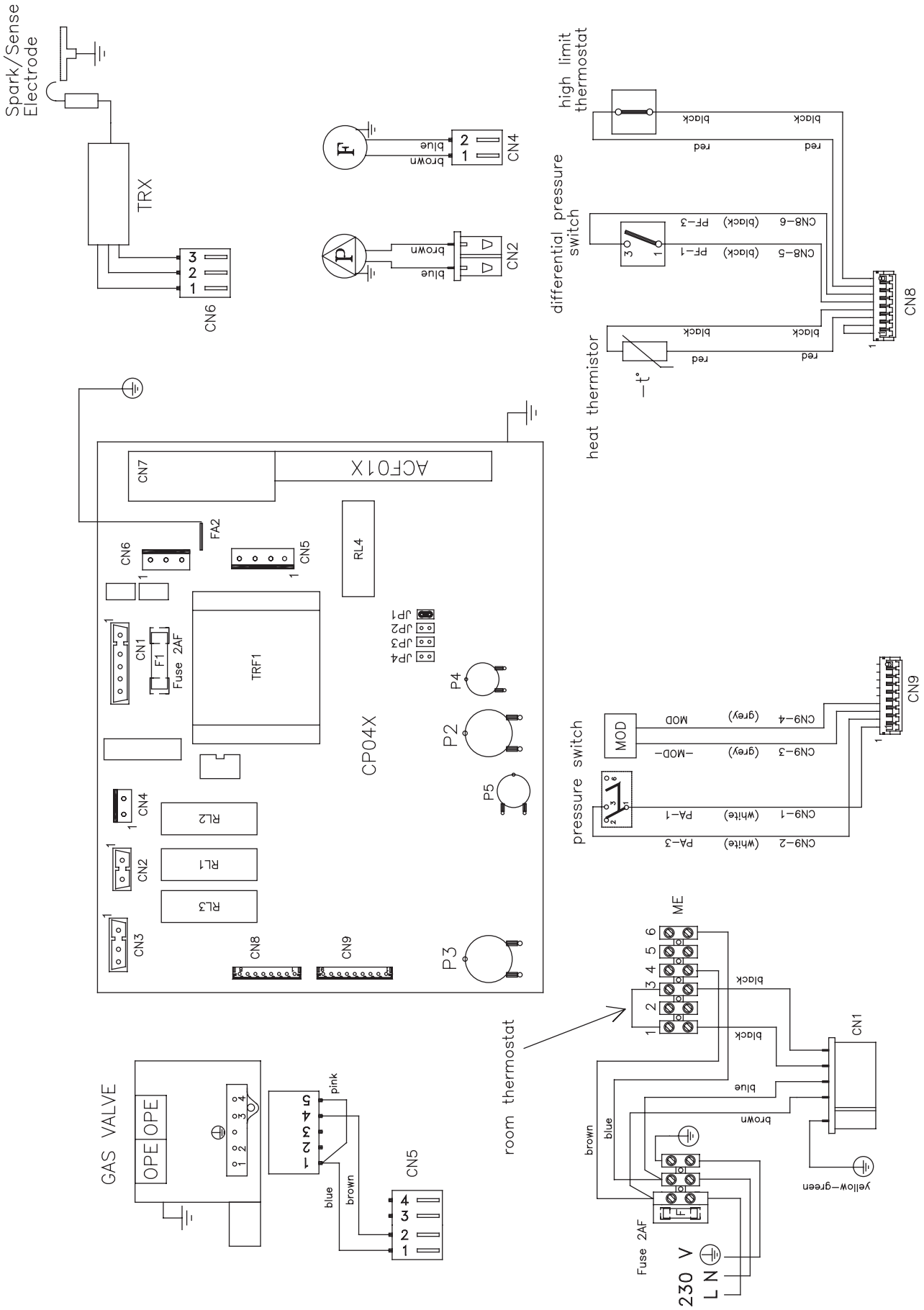

Fig. 17

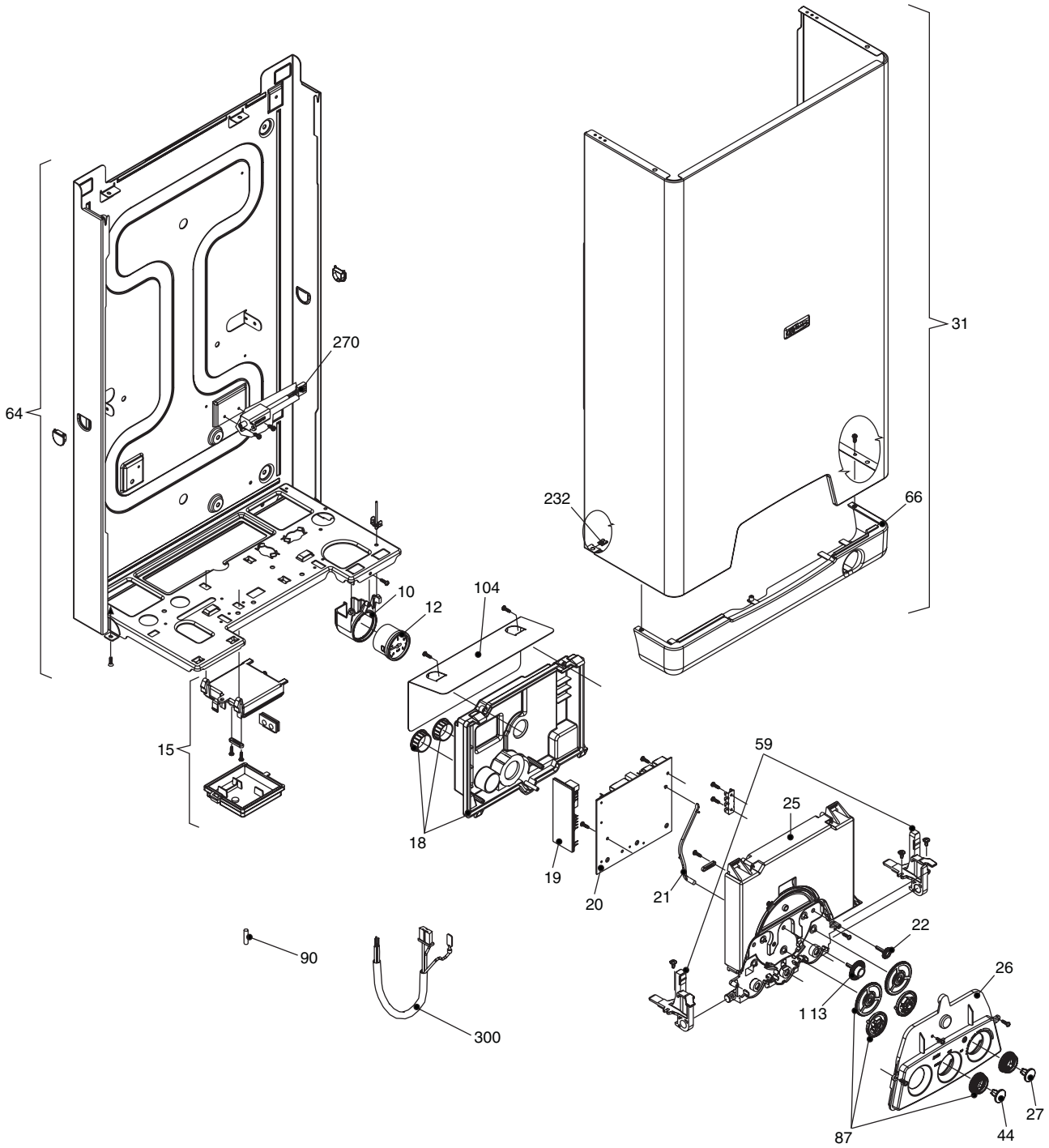

POS.	DESCRIPTION	24	28	24 bi	28 bi
10	Support	10025348	10025348	10025348	10025348
12	Quick primer pressure gauge	10024664	10024664	10024664	10024664
15	Wiring junctions	01005313	01005313	01005313	01005313
18	Cover	10024677	10024677	10024677	10024677
19	Ignition module	10022174	10022174	10022174	10022174
20	Printed circuit board	10025340	10025340	10025340	10025340
21	Led light guide	10024680	10024680	10024680	10024680
22	Gear wheel	10024682	10024682	10024682	10024682
25	Cover	10024676	10024676	10024676	10024676
26	Front panel	10027710	10027710	10027710	10027710
27	Cover	10024687	10024687	10024687	10024687
31	Case	10024692	10024692	-	-
44	Cover	10024686	10024686	10024686	10024686
60	Control panel brackets	01005307	01005307	01005307	01005307
64	Frame	10024660	10024660	10024660	10024660
66	Cover	10024694	10024694	-	-
87	Knob support and gear wheel kit	01005306	01005306	01005306	01005306
90	Tdc 180 bs 1362 3a fuse	3478	3478	3478	3478
104	Front panel protection	10027269	10027269	10027269	10027269
113	Gear wheel	10024681	10024681	10024681	10024681
232	Edge clip	5151	5151	5151	5151
270	Transformer	10021272	10021272	10021272	10021272
300	Wiring harness	10024689	10024689	10024689	10024689

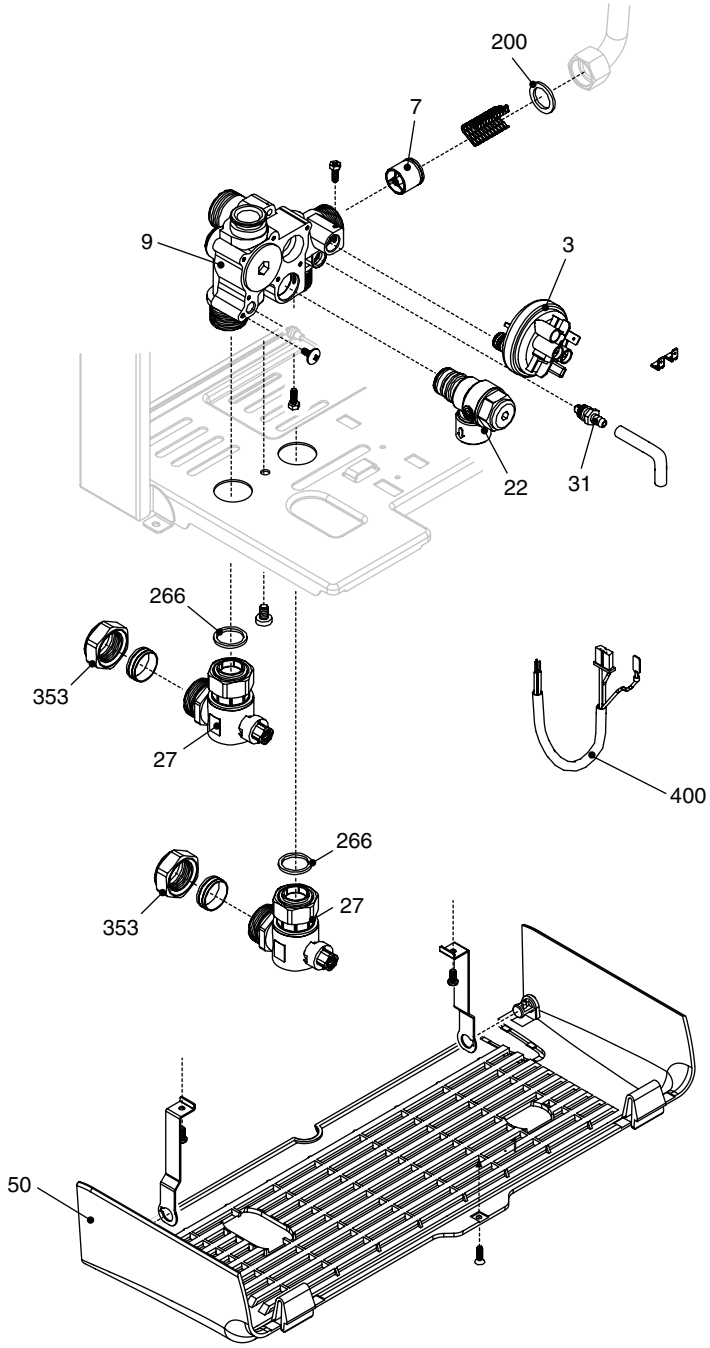

POS.	DESCRIPTION	24	28	24 bi	28 bi
3	Pressure switch	2044	2044	2044	2044
7	Heating by-pass valve	1552	1552	1552	1552
9	Heating distrib. manifold	10021821	10021821	10021821	10021821
22	Safety valve	2907	2907	2907	2907
27	Heating cock	1789	1789	1789	1789
31	Venting plugs kit	01005137	01005137	01005137	01005137
50	Cover	10025591	10025591	-	-
63	Pipe	10027841	10027841	-	-
200	Washer	5023	5023	5023	5023
266	Washer	5237	5237	5237	5237
353	Ogive	1824	1824	-	-
400	Wiring harness	10027713	10027713	10027713	10027713

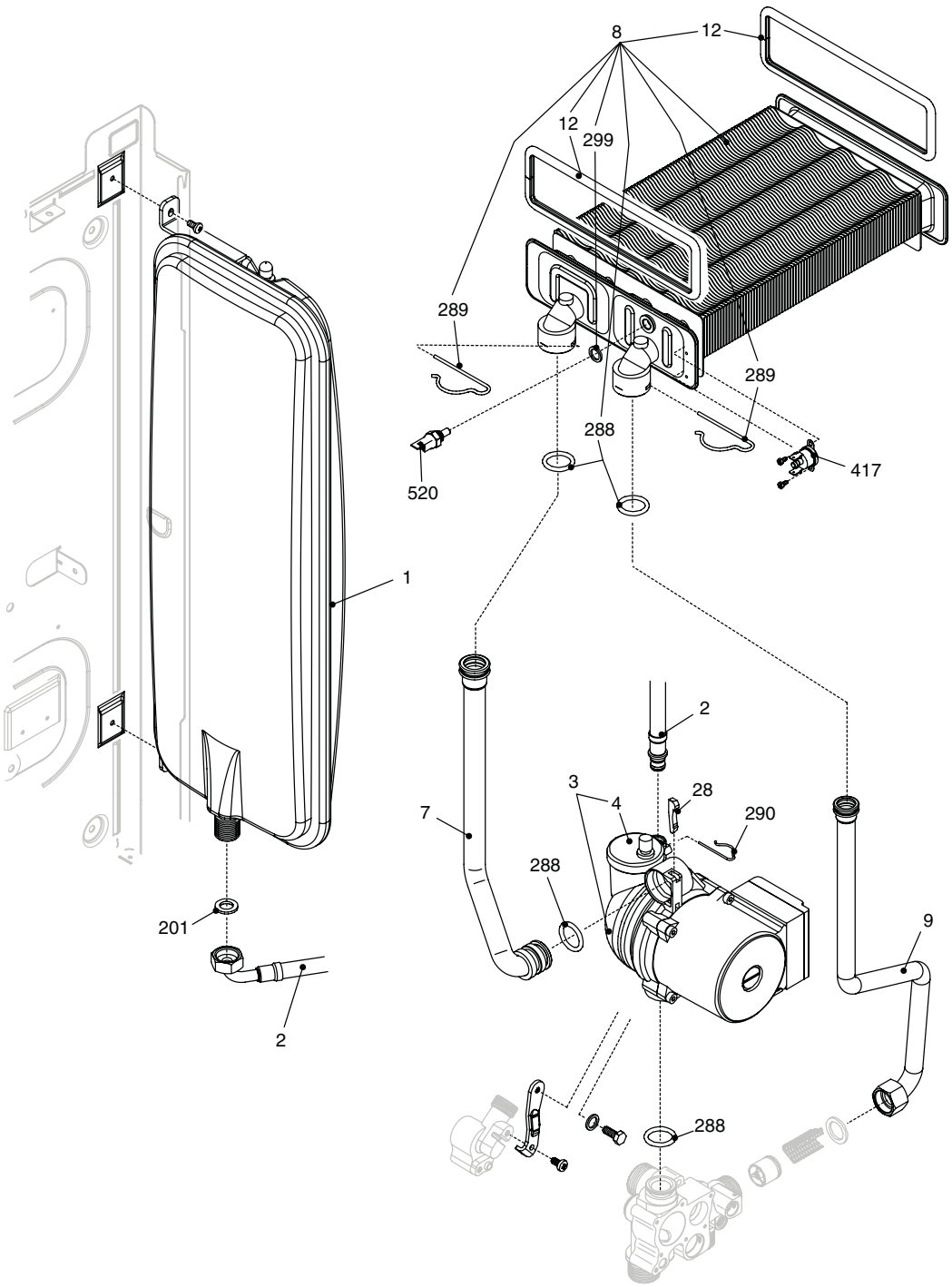

POS.	DESCRIPTION	24	28	24 bi	28 bi
1	Expansion vessel	10024662	10024662	10024662	10024662
2	Flexible pipe	10025188	10025188	10025188	10025188
3	Up 15-50 ao pump	10020437	10020437	10020437	10020437
4	Automatic air vent bottle	0439	0439	0439	0439
7	Pipe	10024672	10024672	10024672	10024672
8	Heat exchanger	10023651	10024301	10023651	10024301
9	Pipe	10027709	10027709	10027709	10027709
11	Bracket	1642	1642	1642	1642
12	Washer	2226	2226	2226	2226
28	Pump lock key	9263	9263	9263	9263
201	Washer	5026	5026	5026	5026
288	O-Ring	6898	6898	6898	6898
289	Clip	2223	2223	2223	2223
290	Clip	2165	2165	2165	2165
299	Washer	10022726	10022726	10022726	10022726
417	High limit thermostat	10024710	10024710	10024710	10024710

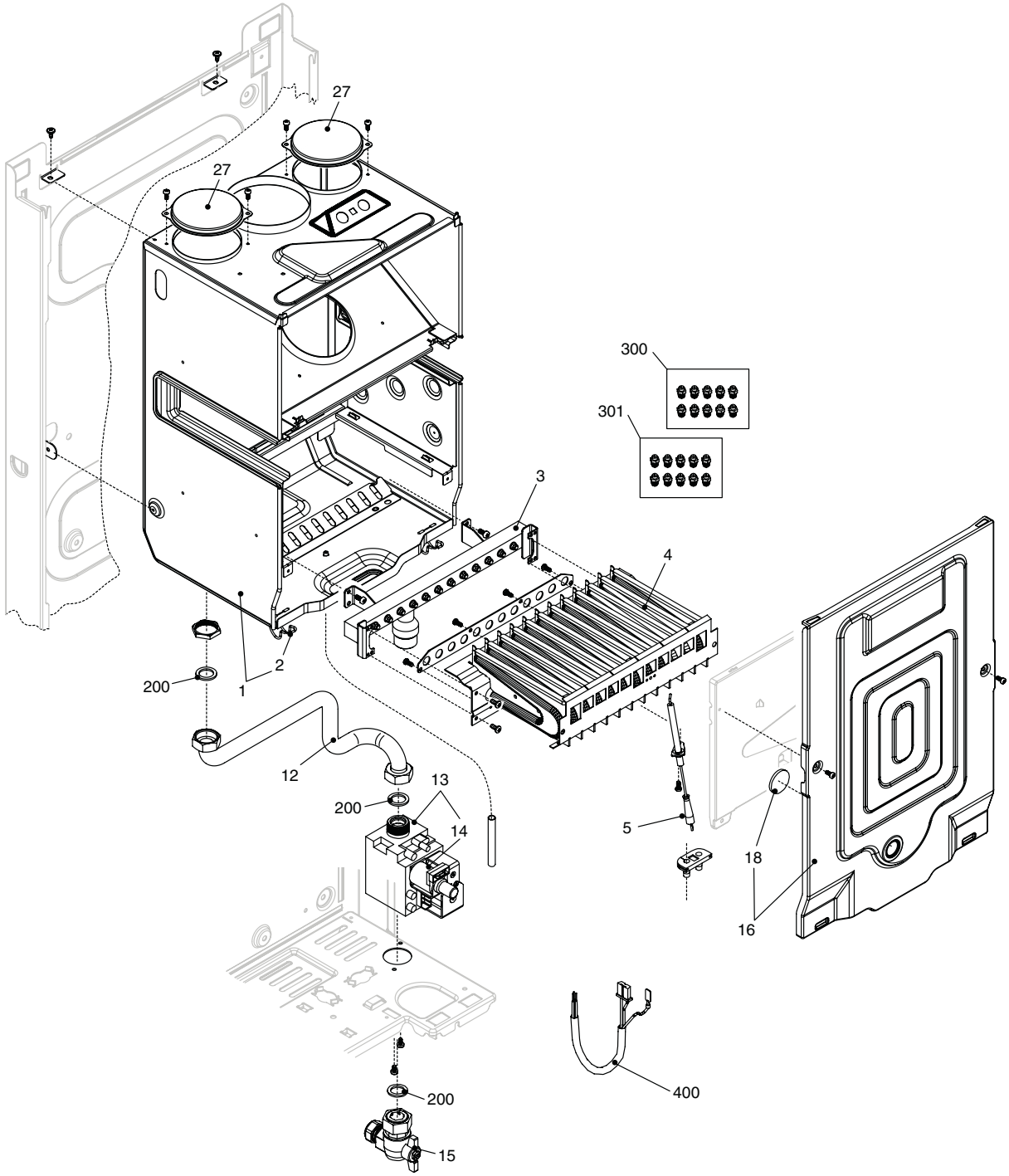

POS.	DESCRIPTION	24	28	24 bi	28 bi
1	Roomsealed chamber	10024669	10024745	10024669	10024745
2	Air box clip	0442	0442	0442	0442
3	Main burner injector manifold	10025271	10024742	10025271	10024742
4	Burner	10025270	10026102	10025270	10026102
5	Spark-sensing electrode	10025985	10025985	10025985	10025985
12	Pipe	10024668	10024668	10024668	10024668
13	Gas valve	10021021	10021021	10021021	10021021
14	Gas valve solenoid	10020838	10020838	10020838	10020838
15	Gas cock	10020897	10020897	10027806	10027806
16	Cover assembly	10024779	10024779	10024779	10024779
18	Glass	10021558	10021558	10021558	10021558
27	Hole cover	10023805	10023805	10023805	10023805
200	Washer	5023	5023	5023	5023
300	Ng conversion kit	01005225	01005225	01005225	01005225
301	Lpg conversion kit	01005297	01005297	01005297	01005297
400	Wiring harness	10025370	10025370	10025370	10025370

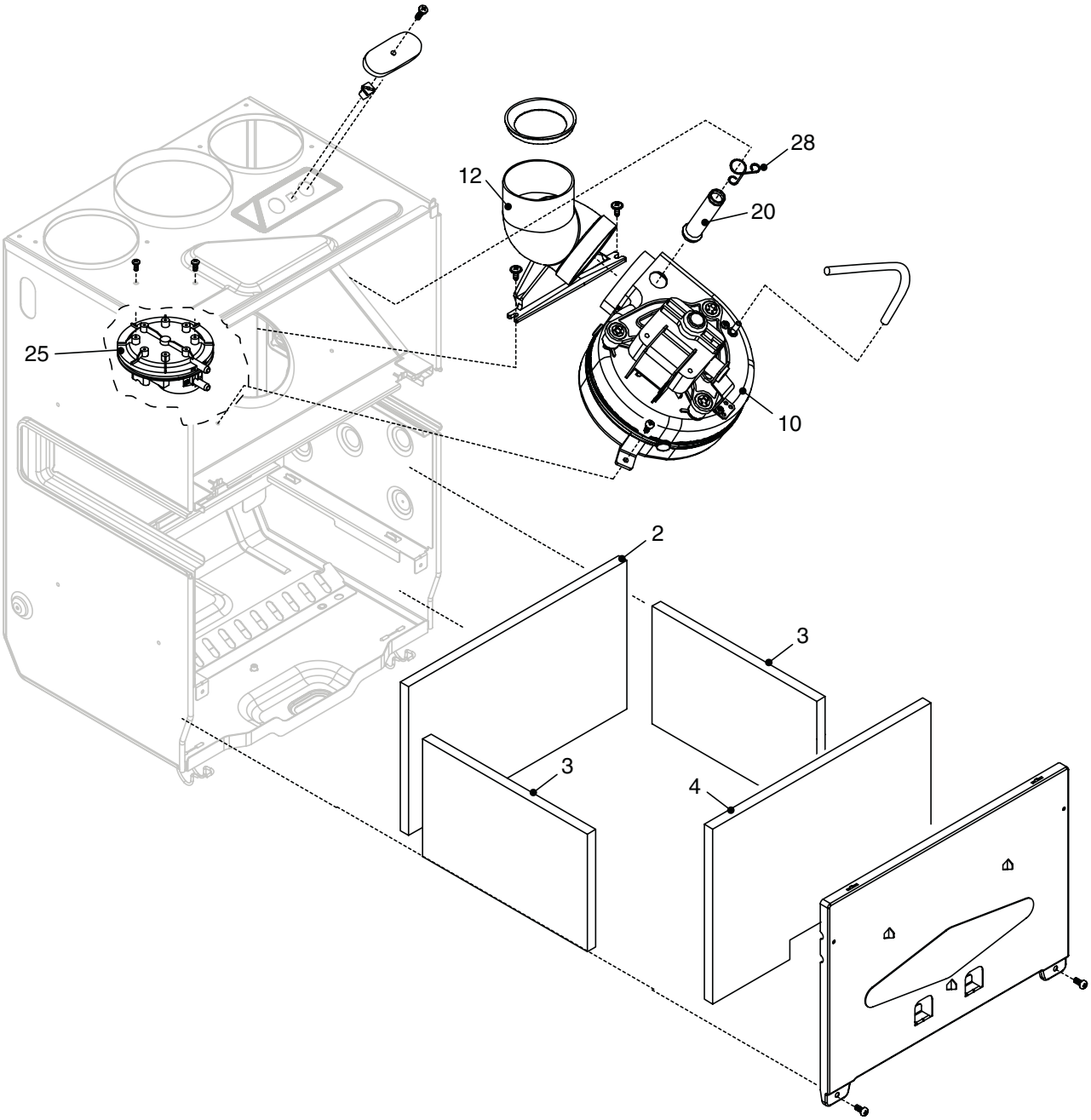

POS.	DESCRIPTION	24	28	24 bi	28 bi
2	Back insulating panel	2230	2230	2230	2230
3	Lateral insulating panel	2231	2231	2231	2231
4	Front insulating panel	2232	2232	2232	2232
10	Fan	10020793	10023907	10020793	10023907
12	Fan connection	10021972	10021972	10021972	10021972
20	Fumes testing connection pipe	10021973	10021973	10021973	10021973
25	Pressure diff. switch	01005272	10023908	01005272	10023908
28	Stop clip	10020626	10020626	10020626	10020626

For details of converting boilers to LPG please refer to the instructions supplied with the relevant conversion kit.

10.1 TECHNICAL DATA

GAS PRESSURES	24-24 bi	28-28 bi
Inlet gas pressure	37 mbar	37 mbar
Burner pressure maximum	36.00 mbar	36.00 mbar
Burner pressure minimum	7.30 mbar	6.80 mbar
Maximum gas rate	2.04 kg/h	2.37 kg/h
Minimum gas rate	0.87 kg/h	0.99 kg/h
Injectot size (quantity)	12 x 0.77	13 x 0.78
NOx (max - min) PPM	160 - 110	180 - 120
CO (max - min) PPM	80 - 140	70 - 150
CO_2 (%)	8.10 - 3.10	7.65 - 2.90
CO/CO_2 ratio (max - min)	0.0009 to 1 - 0.0045 to 1	0.0009 to 1 - 0.0051 to 1

10.2 GAS SUPPLY

The gas supply must be connected to the appliance by a competent LPG installer and must be of sufficient size to supply the appliance at its maximum output.

An existing supply must be checked to ensure that it is of adequate size to deal with the maximum rated input of this and any other appliances that it serves.

10.3 GAS SUPPLY INSTALLATION

The entire installation including the meter must be purged and checked for gas soundness.

10.4 CHECKING AND ADJUSTING BURNER PRESSURE (see fig. 21)

Although the burner pressure is factory set, it is necessary to check it during servicing or if the gas valve has been removed.

Isolate the appliance from the electrical supply and attach a suitable manometer to the gas valve outlet test nipple. Remove the compensator tube.

10.4.1 SETTING THE MAXIMUM BURNER PRESSURE

Light the boiler as described in 5.6 and compare the reading on the manometer with the value described in 10.1. If adjustment is required, remove the protective cap from the gas valve modulating coil assembly and turn the outer (10mm) nut clockwise to increase, or counter-clockwise to decrease the burner pressure.

NOTE

You should ensure that all radiators or heat emitters are fully open during the above procedure. This will ensure that the output of the boiler (burner pressure) is not compromised due to a high flow temperature.

10.4.2 SETTING THE MINIMUM BURNER PRESSURE

Once the maximum burner pressure has been checked and/or adjusted, remove one of the grey wires from the modulating coil. Compare the reading on the manometer with the value described in 10.1. If adjustment is required, turn the inner (red) cross-head screw clockwise to increase, or counter-clockwise to decrease the burner pressure, whilst ensuring that the outer (10mm) nut does not move. When checking and/or adjustment has been completed, isolate the appliance from the electrical supply, replace the protective cap, refit the compensator tube, refit the grey wire to the modulating coil, remove the manometer and tighten the outlet test nipple.

IMPORTANT, A GAS SOUNDNESS CHECK MUST BE CARRIED OUT.

Vokèra
heating for life

Cod. 10027715 - 39/05 - Ed. 1

Registered address:
Vokèra Ltd
Borderlake House
Unit 7 Riverside Industrial Estate
London Colney
Herts AL2 1HG

enquiries@vokera.co.uk

www.vokera.co.uk
www.vokera.ie

Sales, General Enquires
T 0844 391 099
F 0844 391 0998

Vokèra Ireland
West Court, Callan
Co Kilkenny
T 056 7755057
F 056 7755060

Vokèra Limited reserve the right to change
specification without prior notice
Consumers statutory rights are not affected.

A Riello Group Company.
Company Reg No: 1047779