Vokèra

Synergy e

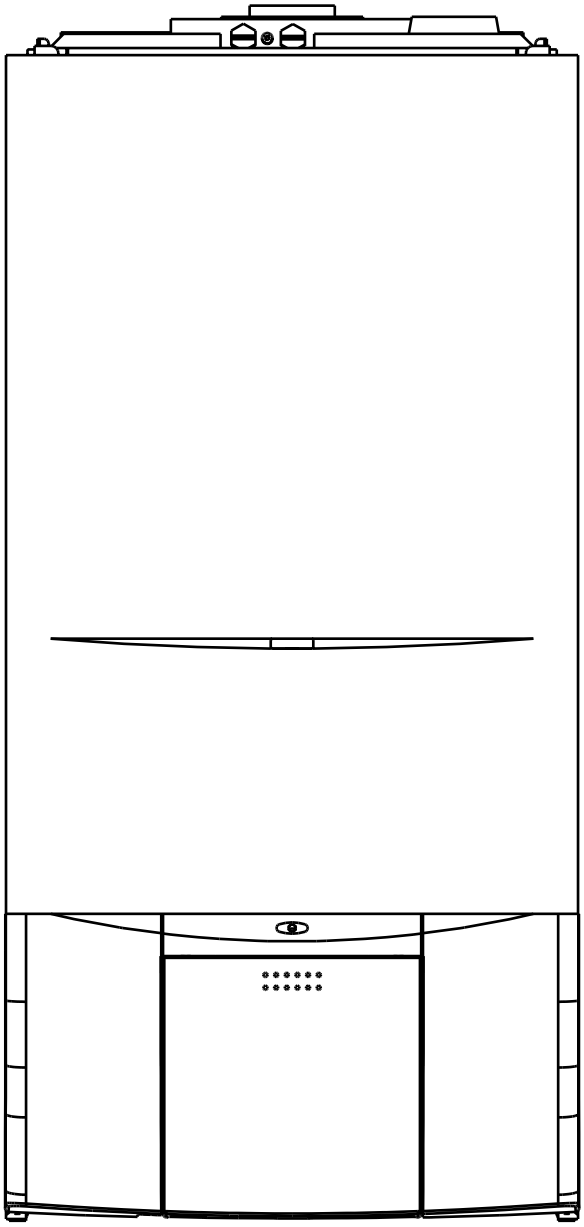

Installation & Servicing Instructions

CE

THESE INSTRUCTIONS TO BE RETAINED BY USER

spares & parts online
IBASIS.co.uk©

Contents

Design principles and operating sequence		**Page**
1.1	Principle components	2
1.2	Mode of operation (at reset)	2
1.3	Mode of operation	2
1.4	Safety devices	2
Technical data		**Page**
2.1	Central heating	3
2.2	Gas pressure	3
2.3	Expansion vessel	3
2.4	Dimensions	3
2.5	Clearances	3
2.6	Connections	3
2.7	Electrical	3
2.8	Flue details (concentric)	3
2.8A	Flue details (twin pipes)	3
2.9	Efficiency	3
2.10	Pump duty	4
2.11	Emissions	4
General requirements (UK)		**Page**
3.1	Related documents	5
3.2	Location of appliance	5
3.3	Gas supply	5
3.4	Flue system	5
3.5	Air supply	5
3.6	Water circulation	5
3.6.1	Pipework	6
3.6.2	Automatic by-pass	6
3.6.3	Drain cocks	6
3.6.4	Air release points	6
3.6.5	Expansion vessel	6
3.6.6	Filling point	6
3.6.7	Low pressure sealed system	6
3.6.8	Frequent filling	6
3.7	Electrical supply	6
3.8	Mounting on a combustible surface	6
3.9	Timber framed building	6
3.10	Inhibitors	6
General requirements (EIRE)		**Page**
3.A1	Related documents	7
3.A2	Location of appliance	7
3.A3	Gas supply	7
3.A4	Flue system	7
3.A5	Air supply	7
3.A6	Water circulation	7
3.A6.1	Pipework	7
3.A6.2	Automatic by-pass	7
3.A6.3	Drain cocks	7
3.A6.4	Air release points	7
3.A6.5	Expansion vessel	8
3.A6.6	Filling point	8
3.A6.7	Low pressure sealed system	8
3.A6.8	Frequent filling	8
3.A7	Electrical supply	8
3.A8	Mounting on a combustible surface	8
3.A9	Timber framed building	8
3.A10	Inhibitors	8
3.A11	Declaration of conformity	8
Installation		**Page**
4.1	Delivery	9
4.2	Contents	9
4.3	Unpacking	9
4.4	Preparation for mounting the appliance	9
4.5	Fitting the flue	9
4.5.1	Concentric horizontal flue	9
4.5.2	Concentric vertical flue	11
4.5.3	Twin flue system	12
4.6	Connecting the gas and water	14
4.6.1	Gas	14
4.6.2	Flow and return	14
4.6.3	Safety valve	14
4.6.4	Condense pipe	15
4.7	Electrical connections	15
4.7.1	Casing removal	15
4.7.2	Appliance terminal block	15
4.7.3	Connecting the mains (230V) input	15
Commissioning		**Page**
5.1	Gas supply installation	17
5.2	The heating system	17
5.3	Initial filling of the system	17
5.4	Initial flushing	17
5.5	Pre-operation checks	17
5.6	Initial lighting	17
5.7	Checking burner pressures	17
5.8	Final flushing of the heating system	17
5.8.1	Inhibtors	18
5.9	Setting the boiler operating temperature	18
5.10	Setting the system design pressure	18
5.11	Regulating the central heating system	18
5.12	Final checks	18
5.13	Instructing the user	18
Servicing instructions		**Page**
6.1	General	19
6.2	Routine annual servicing	19
6.3	Replacement of components	19
6.4	Component removal procedure	19
6.5	Pump assembly	19
6.6	Safety valve	19
6.7	Automatic air release valve	20
6.8	Water pressure switch	20
6.9	Pressure gauge	20
6.10	Primary thermistors	20
6.11	High limit thermostat	20
6.12	Printed circuit board	20
6.13	Gas valve	21
6.14	Integral time switch	21
6.15	Electrode, burner thermostat, burner & injectors	21
6.16	Flue fan	22
6.17	Main heat exchanger	23
6.18	Air pressure switch	23
6.19	Automatic by-pass	23
6.20	Expansion vessel	23
6.20.1	Expansion vessel removal	23
6.20.2	Expansion vessel removal	23
6.21	Latent heat collector	24
6.21A	Dismantling the latent heat collector	24
6.22	Condense trap removal	24
Checks, adjustments and fault finding		**page**
7.1	Checking appliance operation	25
7.2	Appliance mode of operation	25
7.2.1	Selector switch in the off position	25
7.2.2	Selector switch in the hot water only position	25
7.2.3	Appliance functions	25
7.2.4	Heating/HW mode	25
7.3	Checking and adjusting burner pressure	25
7.3.1	Setting the maximum burner pressure	25
7.3.2	Setting the minimum burner pressure	26
7.4	Combustion analysis test	26
7.5	Checking the expansion vessel	26
7.6	External faults	26
7.6.1	Installation faults	26
7.7	Electrical checks	26
7.7.1	Earth continuity test	26
7.7.2	Short circuit test	27
7.7.3	Polarity check	27
7.7.4	Reversed polarity or supply fault	27
7.7.5	Resistance to earth check	27
7.8	Fault finding	27
7.9	Fault codes	27-33
Wiring diagrams		**Page**
8.1	External wiring	34
8.2	Installation of Vokera twin channel programmer	34
8.3	Typical control applications	34
8.4	Vokera time clock	34
8.5	Vokera room thermostat	34
8.6	“S” plan wiring	34
8.7	“Y” plan wiring	34
8.8	Other controls	34
Exploded diagrams		**Page**
Table 1 - 5		39 - 44

The **Synergy e** is a high-efficiency system boiler with an output of 28kW. The appliance - by design - incorporates electronic ignition, circulating pump, expansion vessel, safety valve, pressure gauge and automatic by-pass.
This appliance is not suitable for use with LPG.
The **Synergy e** is produced as room sealed, category II2H appliances, suitable for internal wall mounting applications only. It is provided with a fan powered flue outlet with an annular co-axial combustion air intake that can be rotated - horizontally - through 360 degrees for various horizontal or vertical applications.
The **Synergy e** range can also be used with the Vokera twin flue system.

The **Synergy e** range is approved for use with C12 & C32 type flue applications.

This appliance is designed for use with a sealed system only; consequently it is not intended for use on open vented systems.

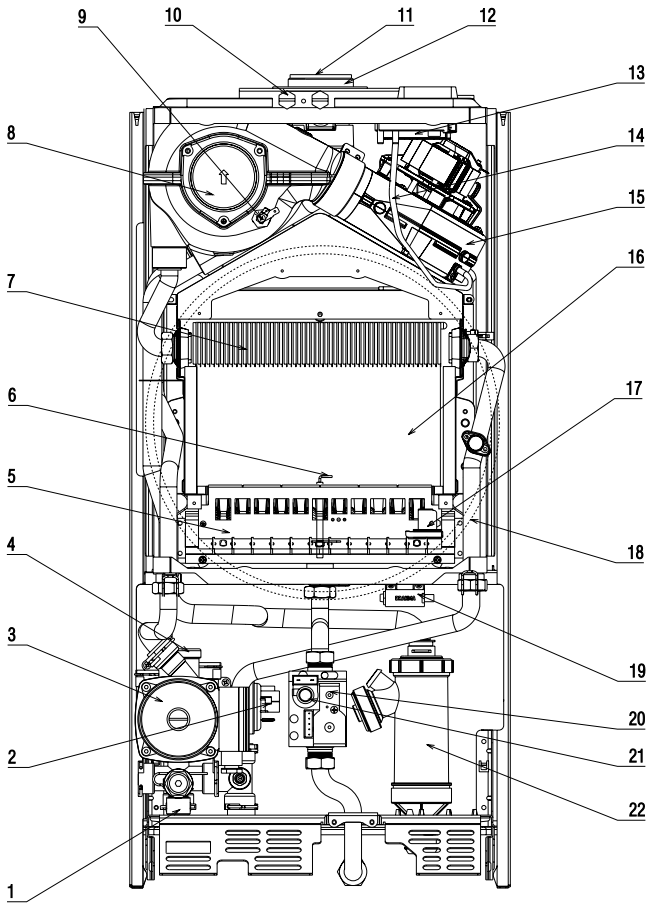

Fig.1 General Layout

1 Safety Valve
2 Pressure Switch
3 Pump
4 Automatic Air Release Valve
5 Main Burner
6 Electrode
7 Main Heat Exchanger
8 Latent Heat Collector
9 Condense Sensor
10 Flue Gas Analysis Test Point
11 Flue Outlet
12 Air Intake
13 Differential Analog Pressure Switch
14 Silicone Tube
15 Fan Assembly
16 Combustion Chamber
17 Burner Temperature Control
18 Expansion Vessel
19 Transformer
20 Gas Valve
21 Modulator Coil
22 Condense Trap
23 Status LED
24 Temperature Indicator
25 Central Heating Temperature Control
26 Combustion Switch
27 Timeclock Aperture (optional)
28 Pressure Gauge
29 Mode Selector Switch

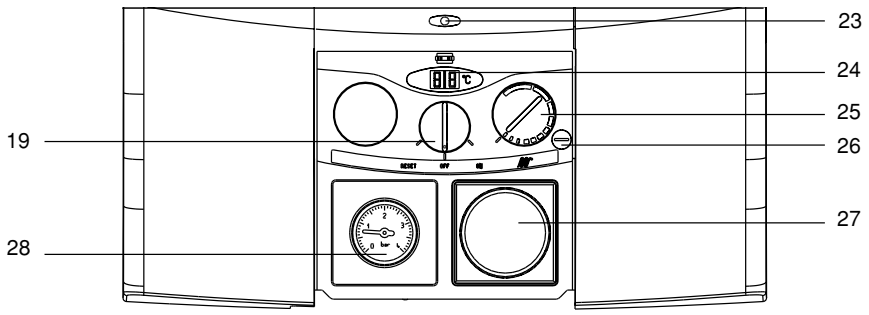

Fig. 1

1.1 PRINCIPLE COMPONENTS

- A fully integrated electronic control board featuring electronic temperature control, anti-cycle control, pump over-run, self-diagnostic fault indicator, full air/gas modulation.
- Low-water-content, copper heat exchanger.
- Electronic ignition with flame supervision
- Integral high-head pump
- Fan
- Expansion vessel
- Analogue pressure switch (PAD)
- Water pressure switch
- Two-stage gas valve
- Pressure gauge
- Safety valve

1.2 MODE OF OPERATION (at rest)

When the appliance is at rest and there are no requests for heating or hot water, the following functions are active:

- 2-stage frost-protection system - the frost-protection system protects the appliance against the risk of frost damage. The first stage enables activation of the pump should the temperature of the appliance fall to 7°C. The second stage becomes active when the temperature has dropped to 3°C. Should the second stage become active, the appliance will function on minimum power until it reaches 30°C.
- anti-block function – the anti-block function enables the pump to be energised for short periods, when the appliance has been inactive for more than 19-hours.

1.3 MODE OF OPERATION

When there is a request for heat and/or hot water, via the programmer/time clock and/or any external control, the pump and fan are started, the fan speed will modulate until the correct signal voltage is received at the control PCB. At this point an ignition sequence is enabled.

Ignition is sensed by the electronic circuitry to ensure flame stability at the burner. Once successful ignition has been achieved, the electronic circuitry increases the gas rate to 75% for a period of 15 minutes. Thereafter, the boiler's output will either be increase to maximum or modulate to suit the set requirement. When the appliance reaches the desired temperature the burner will shut down and the boiler will perform a three-minute anti-cycle (timer delay).

When the request for heat has been satisfied the appliance pump and fan may continue to operate to dissipate any residual heat within the appliance.

1.4 SAFETY DEVICES

When the appliance is in use, safe operation is ensured by:

- a water pressure switch that monitors system water pressure and will de-activate the pump, fan and burner should the system water pressure drop below the rated tolerance.
- a high limit thermostat that over-rides the temperature control circuit to prevent or interrupt the operation of the burner.
- an analogue pressure switch (PAD) that checks the operation of the fan and flue thereby allowing safe operation of the burner.
- a sensor that interrupts the operation of the appliance if the condense pipe becomes blocked.
- a safety valve which releases excess pressure from the primary circuit.

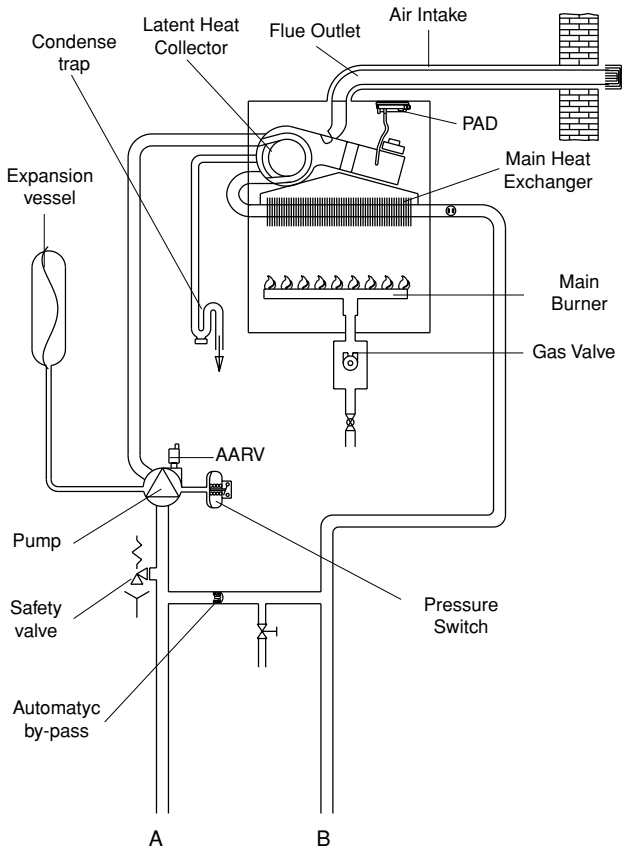

Fig. 2

SECTION 2 TECHNICAL DATA

2.1 Central heating	Synergy 25 e
Heat input	25.0 kW
Max heat output 60/80°C (return & flow temp.)	24.7 kW
Max heat output 30/50°C (return & flow temp.)	26.6 kW
Min heat output 60/80°C (return & flow temp.)	7.28 kW
Min heat output 30/50°C (return & flow temp.)	7.90 kW
Minimum working pressure	0.45 bar
Maximum working pressure	3.0 bar
Minimum flow rate	350 l/h
2.3 Gas pressures	
Inlet pressure (G20)	20.0 mbar
Burner pressure maximum	8.9 mbar
Burner pressure minimum	1.0 mbar
Maximum gas rate	2.64 Sm^3/h
Minimum gas rate	0.79 Sm^3/h
Injector size (quantity)	12 x 1.35 mm
2.4 Expansion vessel	
Capacity	8-litres
Maximum system volume	76-litres
Pre-charge pressure	1.0 bar
2.5 Dimensions	
Height	820mm
Width	400mm
Depth	350mm
Dry weight (kg)	44.0
2.6 Clearances	
Sides	12mm
Top	150mm from casing or 25mm above flue elbow (whichever is applicable)
Bottom	150mm
Front	600mm
2.7 Connections	
Flow & return	22mm
Hot & cold water	15mm
Gas	15mm
Safety valve	15mm
Condense	21mm
2.8 Electrical	
Voltage (V/Hz)	230/50
Power consumption	174W
Internal fuse	2A
External fuse	3A
2.9 Flue details (concentric)	
Maximum horizontal flue length (60/100mm)	2.25m
Maximum vertical flue length (60/100mm)	3.25m
Maximum horizontal flue length (80/125mm)	5.50m
Maximum vertical flue length (80/125mm)	7.0m
2.9A Flue Details (twin pipes)	
Maximum horizontal flue length (80mm + 80mm)	10m+10m
Maximum vertical flue length (80mm + 80mm)	10m+10m
2.10 Efficiency	
SEDBUK (%)	90.52

2.10 PUMP DUTY

Fig. 3 shows the flow-rate available - after allowing for pressure loss through the appliance - for system requirements. When using this graph, apply only the pressure loss of the system. The graph is based on a 20°C temperature differential.

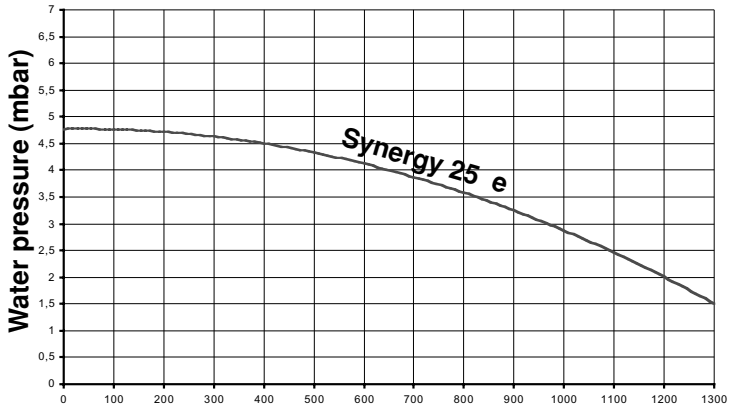

Fig. 3

2.11 Emissions

Appliance	Synergy 25 e
NOx max/min	160/140
CO max/min	70/20
CO2 max/min	6.5/4.8
CO/CO2 ratio max/min	0.00108 to 1/0.00044 to 1

Fig. 4

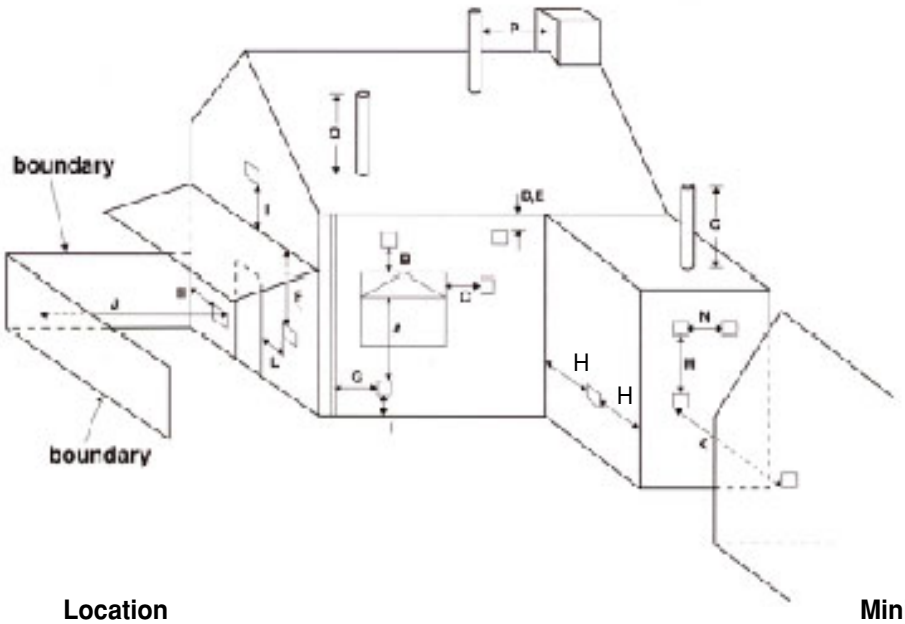

Key	Location	Minimum distance
A	Below an opening (window, air-brik, etc.)	300 mm
B	Above an opening (window, air-brik, etc.)	300 mm
C	To the side of an opening (window, air-brik, etc.)	300 mm
D	Below gutter, drain-pipe, etc.	75 mm
E	Below eaves	200 mm
F	Below balcony, car-port roof, etc.	200 mm
G	To the side of a soil/drain-pipe, etc.	150 mm
H	From internal/external corner or boundary	300 mm
I	Above ground, roof, or balcony level	300 mm
J	From a surface or boundary facing the terminal	600 mm
K	From a terminal facing a terminal	1200 mm
L	From an opening in the car-port into the building	1200 mm
M	Vertically from a terminal on the same wall	1500 mm
N	Horizontally from a terminal on the same wall	300 mm
P	From a structure to the side of the vertical terminal	300 mm
Q	From the top of the vertical terminal to the roof flashing	As determined by the fixed collar of the vertical terminal

This appliance must be installed by a competent person in accordance with the Gas Safety (Installation & Use) Regulations.

3.1 RELATED DOCUMENTS

The installation of this boiler must be in accordance with the relevant requirements of the Gas Safety (Installation & Use) Regulations, the local building regulations, the current I.E.E. wiring regulations, the bylaws of the local water undertaking, the Building Standards (Scotland) Regulation and Building Standards (Northern Ireland) Regulations.
It should be in accordance also with any relevant requirements of the local authority and the relevant recommendations of the following British Standard Codes of Practice.

3.2 LOCATION OF APPLIANCE

The appliance may be installed in any room or internal space, although particular attention is drawn to the requirements of the current I.E.E. wiring regulations and in Scotland, the electrical provisions of the Building Regulations, with respect to the installation of the appliance in a room or internal space containing a bath or shower.

3.3 GAS SUPPLY

The gas meter - as supplied by the gas supplier - must be checked to ensure that it is of adequate size to deal with the maximum rated input of all the appliances that it serves. Installation pipes must be fitted in accordance with BS 6891.
Pipe work from the meter to the appliance must be of adequate size. Pipes of a smaller size than the appliance gas inlet connection must not be used. The installation must be tested for soundness in accordance with BS6891.
If the gas supply serves more than one appliance, it must be ensured that an adequate supply is maintained to each appliance when they are in use at the same time.

3.4 FLUE SYSTEM

The terminal should be located where the dispersal of combustion products is not impeded and with due regard for the damage and discoloration that may occur to building products located nearby. The terminal must not be located in a place where it is likely to cause a nuisance (see fig. 4).
In cold and/or humid weather, water vapour will condense on leaving the terminal; the effect of such pluming must be considered.

BS 5440	PART 1	FLUES
BS 5440	PART 2	FLUES & VENTILATION
BS 5449	PART 1	FORCED CIRCULATION HOT WATER SYSTEMS
BS 6798		INSTALLATION OF BOILERS OF RATED INPUT NOT EXCEEDING 60kW
BS 6891		LOW PRESSURE INSTALLATION PIPES
BS 7074	PART 1	APPLICATION, SELECTION AND INSTALLTION OF EXPANSION VESSELS AND ANCILLARY EQUIPMENT FOR SEALED WATER SYSTEMS

When an appliance is installed in a room or internal space containing a bath or shower, the appliance or any control pertaining to it must not be within reach of a person using the bath or shower.
The location chosen for the appliance must permit the provision of a safe and satisfactory flue and termination. The location must also permit an adequate air supply for combustion purposes and an adequate space for servicing and air circulation around the appliance. Where the installation of the appliance will be in an unusual location special procedures may be necessary, BS 6798 gives detailed guidance on this aspect.
A compartment used to enclose the appliance must be designed and constructed specifically for this purpose. An existing compartment/ cupboard may be utilised provided that it is modified to suit.
Details of essential features of compartment/ cupboard design including airing cupboard installations are given in BS 6798. This appliance is not suitable for external installation.

If installed less than 2m above a pavement or platform to which people have access (including balconies or flat roofs) the terminal must be protected by a guard of durable material. The guard must be fitted centrally over the terminal. Refer to BS 5440 Part 1, when the terminal is 0.5 metres (or less) below plastic guttering or 1 metre (or less) below painted eaves.

3.5 AIR SUPPLY

The following notes are intended for general guidance only.
This appliance is a room-sealed, fan-flued boiler, consequently it does not require a permanent air vent for combustion air supply. When installed in a cupboard or compartment, ventilation for cooling purposes is also not required.

3.6 WATER CIRCULATION

Detailed recommendations are given in BS 5449 Part 1 and BS 6798. The following notes are for general guidance only.

3.6.1 PIPEWORK

It is recommended that copper tubing to BS 2871 Part 1 is used in conjunction with soldered capillary joints.

Where possible pipes should have a gradient to ensure air is carried naturally to air release points and that water flows naturally to drain cocks.

Except where providing useful heat, pipes should be insulated to avoid heat loss and in particular to avoid the possibility of freezing. Particular attention should be paid to pipes passing through ventilated areas such as under floors, loft space and void areas.

3.6.2 AUTOMATIC BY-PASS

The appliance has a built-in automatic by-pass, consequently there is no requirement for an external by-pass, however the design of the system should be such that it prevents boiler 'cycling'.

3.6.3 DRAIN COCKS

These must be located in accessible positions to facilitate draining of the appliance and all water pipes connected to the appliance. The drain cocks must be manufactured in accordance with BS 2879.

3.6.4 AIR RELEASE POINTS

These must be positioned at the highest points in the system where air is likely to be trapped. They should be used to expel trapped air and allow complete filling of the system.

3.6.5 EXPANSION VESSEL

The appliance has an integral expansion vessel to accommodate the increased volume of water when the system is heated. It can accept up to 10 litres of expansion from within the system, generally this is sufficient, however if the system has an unusually high water content, it may be necessary to provide additional expansion capacity.

3.6.6 FILLING POINT

A method for initial filling of the system and replacing water lost during servicing etc. is required (see fig. 14). This method of filling must comply with the current Water Supply (Water Fittings) Regulations 1999 and Water Bylaws 2000 (Scotland).

3.6.7 LOW PRESSURE SEALED SYSTEM

An alternative method of filling the system would be from an independent make-up vessel or tank mounted in a position at least 1 metre above the highest point in the system and at least 5 metres above the boiler (see fig. 5). The cold feed from the make-up vessel or tank must be fitted with an approved non-return valve and stopcock for isolation purposes. The feed pipe should be connected to the return pipe as close to the boiler as possible.

3.6.8 FREQUENT FILLING

Frequent filling or venting of the system may be indicative of a leak. Care should be taken during the installation of the appliance to ensure all aspects of the system are capable of withstanding pressures up to at least 3 bar.

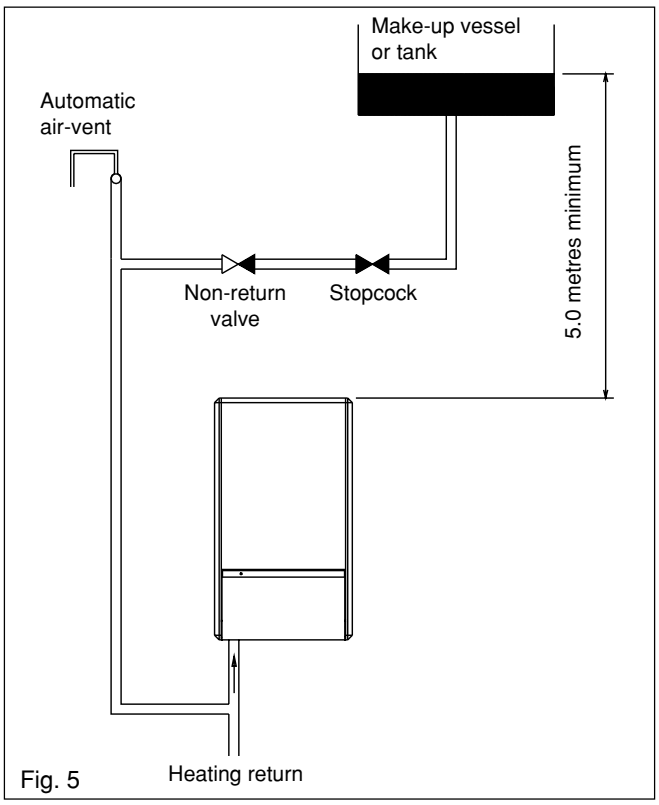

Fig. 5

3.7 ELECTRICAL SUPPLY

The appliance is supplied for operation on 230V @ 50Hz electrical supply; it must be protected with a 3-amp fuse. The method of connection to the mains electricity supply must allow for complete isolation from the supply. The preferred method is by using a double-pole switch with a contact separation of at least 3mm. The switch must only supply the appliance and its corresponding controls, i.e. time clock, room thermostat, etc. Alternatively an un-switched shuttered socket with a fused 3-pin plug both complying with BS 1363 is acceptable.

3.8 MOUNTING ON A COMBUSTIBLE SURFACE

If the appliance is to be fitted on a wall of combustible material, a sheet of fireproof material must protect the wall.

3.9 TIMBER FRAMED BUILDINGS

If the appliance is to be fitted in a timber framed building, it should be fitted in accordance with the Institute of Gas Engineers publication (IGE/UP/7) 'Guide for Gas Installations in Timber Frame Buildings'.

3.10 INHIBITORS

Vokera recommend that a inhibitor - suitable for use with low water-content, copper heat exchangers - is used to protect the boiler and system from the effects of corrosion and/or electrolytic action. The inhibitor must be administered in strict accordance with the manufacturers* instructions.

*Fernox and Sentinel manufacture products that have proved suitable for use with Vokera appliances. Vokera Ltd. cannot comment on the suitability of any other such product with our appliances.

This appliance must be installed by a competent person in accordance with and defined by, the Standard Specification (Domestic Gas Installations) Declaration (I.S. 813).

3A.1 RELATED DOCUMENTS

The installation of this boiler must be in accordance with the relevant requirements of the local building regulations, the current ETCI National Rules for Electrical Installations, and the bylaws of the local water undertaking.

It should be in accordance also with any relevant requirements of the local and/or district authority.

3A.2 LOCATION OF APPLIANCE

The appliance may be installed in any room or internal space, although particular attention is drawn to the requirements of the current ETCI National Rules for Electrical Installations, and I.S. 813, Annex K.

When an appliance is installed in a room or internal space containing a bath or shower, the appliance or any control pertaining to it must not be within reach of a person using the bath or shower.

The location chosen for the appliance must permit the provision of a safe and satisfactory flue and termination. The location must also permit an adequate air supply for combustion purposes and an adequate space for servicing and air circulation around the appliance. Where the installation of the appliance will be in an unusual location special procedures may be necessary, refer to I.S. 813 for detailed guidance on this aspect.

A compartment used to enclose the appliance must be designed and constructed specifically for this purpose. An existing compartment/ cupboard may be utilised provided that it is modified to suit.

This appliance is not suitable for external installation.

3A.3 GAS SUPPLY

The gas meter - as supplied by the gas supplier - must be checked to ensure that it is of adequate size to deal with the maximum rated input of all the appliances that it serves. Installation pipes must be fitted in accordance with I.S. 813.

Pipe work from the meter to the appliance must be of adequate size. Pipes of a smaller size than the appliance gas inlet connection must not be used. The installation must be tested for soundness in accordance with I.S. 813.

If the gas supply serves more than one appliance, it must be ensured that an adequate supply is maintained to each appliance when they are in use at the same time.

3A.4 FLUE SYSTEM

The terminal should be located where the dispersal of combustion products is not impeded and with due regard for the damage and discoloration that may occur to building products located nearby. The terminal must not be located in a place where it is likely to cause a nuisance (see I.S. 813).

n cold and/or humid weather, water vapour will condense on leaving the terminal; the effect of such pluming must be considered.

If installed less than 2m above a pavement or platform to which people have access (including balconies or flat roofs) the terminal must be protected by a guard of durable material. The guard must be fitted centrally over the terminal. Refer to I.S. 813, when the terminal is 0.5 metres (or less) below plastic guttering or 1 metre (or less) below painted eaves.

3A.5 AIR SUPPLY

The following notes are intended for general guidance only.

This appliance is a room-sealed, fan-flued boiler, consequently it does not require a permanent air vent for combustion air supply.

When installed in a cupboard or compartment, ventilation for cooling purposes is also not required.

3A.6 WATER CIRCULATION

Specific recommendations are given in I.S. 813. The following notes are for general guidance only.

3A.6.1 PIPEWORK

It is recommended that copper tubing be used in conjunction with soldered capillary joints.

Where possible pipes should have a gradient to ensure air is carried naturally to air release points and that water flows naturally to drain cocks.

Except where providing useful heat, pipes should be insulated to avoid heat loss and in particular to avoid the possibility of freezing. Particular attention should be paid to pipes passing through ventilated areas such as under floors, loft space, and void areas.

3A.6.2 AUTOMATIC BY-PASS

The appliance has a built-in automatic by-pass, consequently there is no requirement for an external by-pass, however the design of the system should be such that it prevents boiler 'cycling'.

3A.6.3 DRAIN COCKS

These must be located in accessible positions to facilitate draining of the appliance and all water pipes connected to the appliance.

3A.6.4 AIR RELEASE POINTS

These must be positioned at the highest points in the system where air is likely to be trapped. They should be used to expel trapped air and allow complete filling of the system.

3A.6.5 EXPANSION VESSEL

The appliance has an integral expansion vessel to accommodate the increased volume of water when the system is heated. It can accept up to 10 litres of expansion from within the system, generally this is sufficient, however if the system has an unusually high water content, it may be necessary to provide additional expansion capacity.

3A.6.6 FILLING POINT

A method for initial filling of the system and replacing water lost during servicing etc. is required (see fig. 14). You should ensure this method of filling complies with the local water authority regulations.

3A.6.7 LOW PRESSURE SEALED SYSTEM

An alternative method of filling the system would be from an independent make-up vessel or tank mounted in a position at least 1 metre above the highest point in the system and at least 5 metres above the boiler (see fig. 5).

The cold feed from the make-up vessel or tank must be fitted with an approved non-return valve and stopcock for isolation purposes. The feed pipe should be connected to the return pipe as close to the boiler as possible.

3A.6.8 FREQUENT FILLING

Frequent filling or venting of the system may be indicative of a leak. Care should be taken during the installation of the appliance to ensure all aspects of the system are capable of withstanding pressures up to at least 3 bar.

3A.7 ELECTRICAL SUPPLY

The appliance is supplied for operation on 230V @ 50Hz electrical supply; it must be protected with a 3-amp fuse. The method of connection to the mains electricity supply must allow for complete isolation from the supply. The preferred method is by using a double-pole switch with a contact separation of at least 3mm. The switch must only supply the appliance and its corresponding controls, i.e. time clock, room thermostat, etc.

3A.8 MOUNTING ON A COMBUSTIBLE SURFACE

If the appliance is to be fitted on a wall of combustible material, a sheet of fireproof material must protect the wall.

3A.9 TIMBER FRAMED BUILDINGS

If the appliance is to be fitted in a timber framed building, it should be fitted in accordance with I.S. 813 and local Building Regulations.

The Institute of Gas Engineers publication (IGE/UP/7) 'Guide for Gas Installations in Timber Frame Buildings' gives specific advice on this type of installation.

3A.10 INHIBITORS

Vokera recommend that a inhibitor - suitable for use with low water-content, copper heat exchangers - is used to protect the boiler and system from the effects of corrosion and/or electrolytic action. The inhibitor must be administered in strict accordance with the manufacturers* instructions.

*Fernox and Sentinel manufacture products that have proved suitable for use with Vokera appliances. Vokera Ltd. cannot comment on the suitability of any other such product with our appliances.

3A.11 DECLARATION OF CONFORMITY

A Declaration of Conformity (as defined in I.S. 813) must be provided on completion of the installation.

A copy of the declaration must be given to the responsible person and also to the gas supplier if required.

4.1 DELIVERY

Due to the weight of the appliance it may be necessary for two people to lift and attach the appliance to its mounting. The appliance is contained within a heavy-duty cardboard carton. Lay the carton on the floor with the writing the correct way up.

4.2 CONTENTS

Contained within the carton is:

- the boiler
- the wall bracket
- template
- an accessories pack containing appliance service connections and washers
- the instruction pack containing the installation & servicing instructions, user instructions, Benchmark logbook, guarantee registration card and a 3-amp fuse.

4.3 UNPACKING (see fig. 6)

At the top of the carton pull both sides open – do not use a knife – unfold the rest of the carton from around the appliance, carefully remove all protective packaging from the appliance and lay the accessories etc. to one side. Protective gloves should be used to lift the appliance, the appliance back-frame should be used for lifting points.

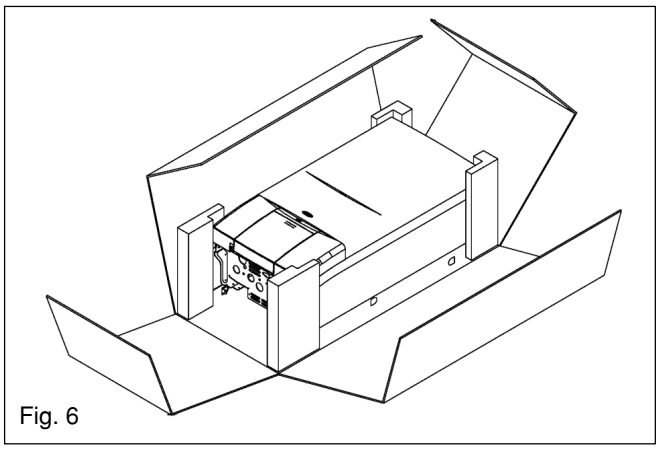

Fig. 6

4.4 PREPARATION FOR MOUNTING THE APPLIANCE (see fig. 6A)

The appliance should be mounted on a smooth, vertical, non-combustible surface, which must be capable of supporting the full weight of the appliance. Care should be exercised when determining the position of the appliance with respect to hidden obstructions such as pipes, cables, etc.

When the position of the appliance has been decided - using the template supplied – carefully mark the position of the wall- mounting bracket (see fig. 6A) and flue-hole (if applicable).

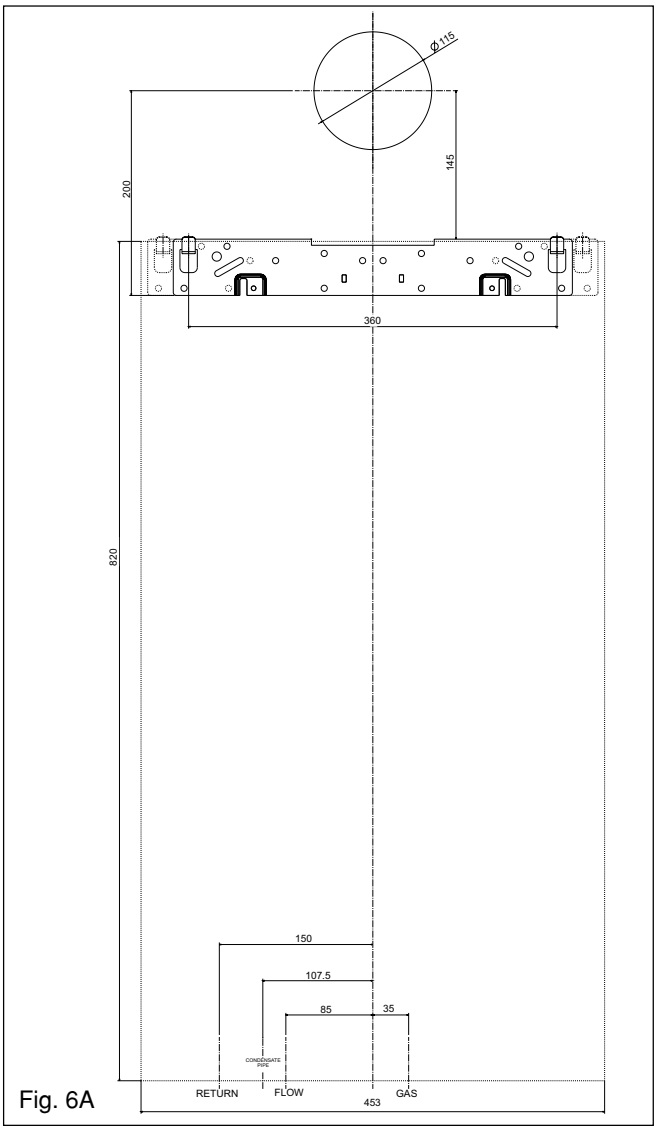

Fig. 6A

4.5 FITTING THE FLUE

The top flue outlet permits both horizontal and vertical flue applications to be considered, alternatively, the Vokera twin flue system can be utilised if longer flue runs are required.

4.5.1 CONCENTRIC HORIZONTAL FLUE

(For concentric vertical flue, see 4.5.2)
(For twin flue applications, see 4.5.3)
The appliance can be used with either the Vokera condensing 60/100mm concentric flue system or the optional 80/125mm concentric flue system.

NOTE

These instructions relate **only** to the Vokera condensing 60/100mm concentric flue system. For specific details on the installation of the 80/125mm concentric flue system please refer to the instructions supplied.

The appliance flue outlet elbow can be rotated through 360° on its vertical axis. In addition the flue may be extended from the outlet elbow in the horizontal plane (see 2.8). A reduction must also be made to the maximum length (see table below) when additional bends are used.

Reduction for additional bends

Bend	Reduction in maximum flue length for each bend
45° bend	0.5 metre
90° bend	1.0 metre

Horizontal flue terminals and accessories

Part No.	Description	Min-Max Length
0225720	Horizontal flue kit for use with add. bends & extensions	1000mm
0225755	Telescopic extension	350mm – 500mm
0225740	0.5m extension	500mm
0225745	1.0m extension	1000mm
0225750	2.0m extension	2000mm
0225730	45° bend (pair)	N/A
0225735	90° bend	N/A
0225760	Wall bracket (5)	N/A

Using the template provided, mark and drill a 115mm hole for the passage of the flue pipe. The hole should have a 1° rise from the boiler to outside, to ensure any condense fluid that forms, is allowed to drain back to the appliance.
The fixing holes for the wall-mounting bracket should now be drilled and plugged, an appropriate type and quantity of fixing should be used to ensure that the bracket is mounted securely. Once the bracket has been secured to the wall, mount the appliance onto the bracket.

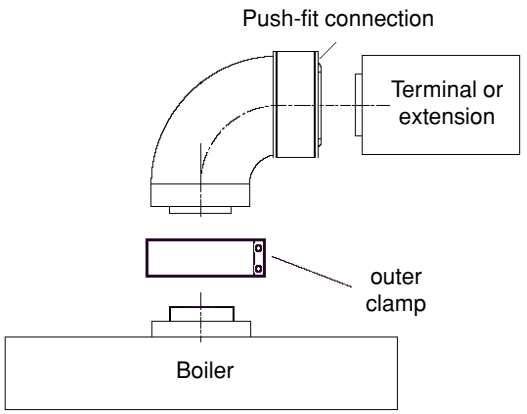

Fig. 7

FITTING THE HORIZONTAL FLUE KIT
Carefully measure the distance from the centre of the appliance flue outlet to the edge of the finished outside wall (dimension X). Add 45mm to dimension X to give you Dimension Y (see fig 7A). Measure dimension Y from the terminal end of the concentric flue pipe and cut off the excess ensuring any burrs are removed. Pass the concentric flue pipe through the previously drilled hole. Fit the flue bend to the boiler flue outlet and insert the concentric flue pipe into the flue bend ensuring the correct seal is made. Using the clamp, gasket and screws supplied, secure the flue bend to the appliance flue spigot. The 60mm M & F adaptor (supplied with the flue kit) should be discarded.

NOTE
Fit the internal trim to the flue assembly prior to connecting the flue pipe to the bend.

You must ensure that the entire flue system is properly supported and connected.
Seal the flue assembly to the wall using cement or a suitable alternative that will provide satisfactory weatherproofing.
The exterior trim can now be fitted.

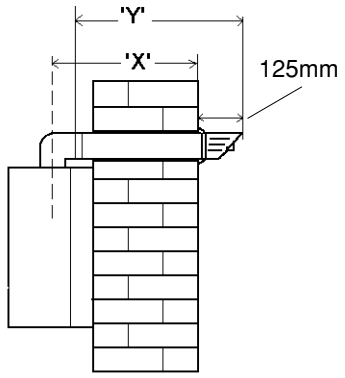

Fig. 7A "Y" = "X" + 45mm

4.5.1.1 EXTENDING THE FLUE
Connect the bend - supplied with the terminal kit - to the top of the boiler using clamp (supplied) see fig. 7. The additional bends & extensions have push-fit connections, care should be taken to ensure that the correct seal is made when assembling the flue system. Connect the required number of flue extensions or bends (up to the maximum equivalent flue length) to the flue terminal (see fig. 7 & 8).

The hole should have a 1° rise from the boiler to outside, to ensure any condense fluid that forms, is allowed to drain back to the appliance.

NOTE
When cutting an extension to the required length, you must ensure that the excess is cut from the plain end of the extension (see fig. 7 & 8). Remove any burrs, and check that all seals are located properly.
You must ensure that the entire flue system is properly supported and connecte.
Seal the flue assembly to the wall using cement or a suitable alternative that will provide satisfactory weatherproofing. The interior and exterior trim can now be fitted.

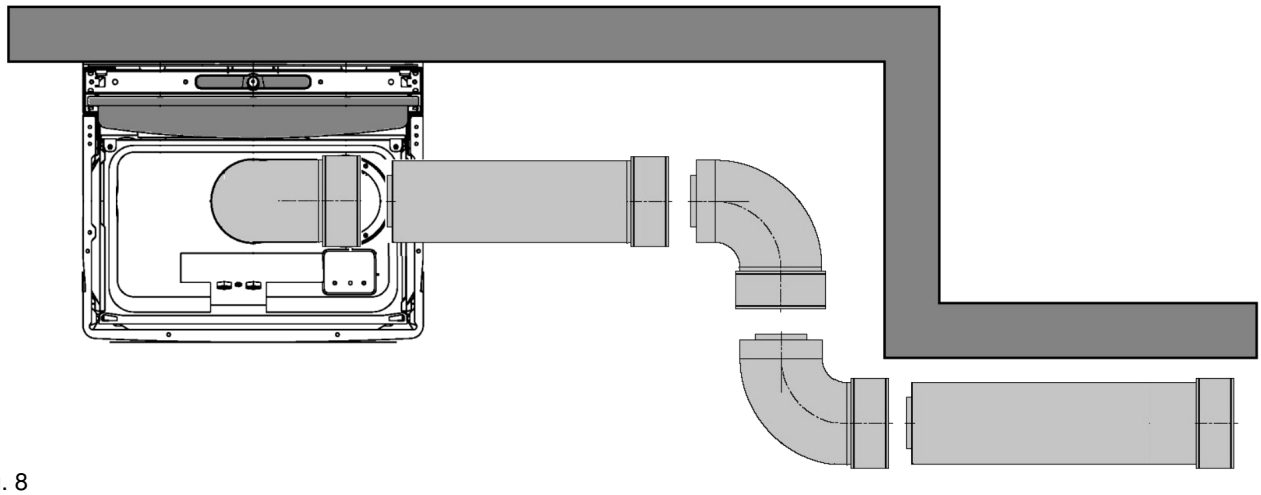

Fig. 8

4.5.2 CONCENTRIC VERTICAL FLUE

The appliance can be used with either the Vokera condensing 60/100mm concentric flue system or the optional 80/125mm concentric flue system.

NOTE

These instructions relate **only** to the Vokera condensing 60/100mm concentric flue system. For specific details on the installation of the 80/125mm concentric flue system please refer to the instructions supplied.

The vertical flue terminal can be connected directly to the appliance flue outlet. Alternatively, an extension or bend can be connected to the appliance flue outlet if desired, however if additional bends are fitted, a reduction must be made to the maximum flue length (see table below).

Reduction for bends

Bend	Reduction in maximum flue length for each bend
45° bend	0.5 metre
90° bend	1.0 metre

Vertical flue terminal and accessories

Part No.	Description	Length
0225725	Vertical flue terminal	1.0 metre
0225770	Pitched roof flashing plate	N/A
0225765	Flat roof flashing plate	N/A
0225755	350-500 telescopic extension	350mm – 500mm
0225740	500mm extension	500mm
0225745	1000mm extension	1000mm
0225750	2000mm extension	2000mm
0225730	45° bend (pair)	N/A
0225735	90° bend	N/A
0225760	Wall bracket (4)	N/A

Using the dimensions given in fig. 9 as a reference, mark and cut a 115mm hole in the ceiling and/or roof.

Fit the appropriate flashing plate to the roof and insert the vertical flue terminal through the flashing plate from the outside, ensuring that the collar on the flue terminal fits over the flashing.

The fixing holes for the wall-mounting bracket should now be drilled and plugged, an appropriate type and quantity of fixing should be used to ensure that the bracket is mounted securely. Once the bracket has been secured to the wall, mount the appliance onto the bracket.

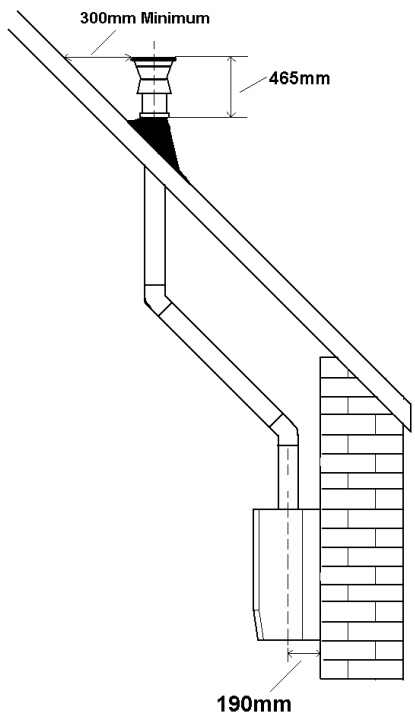

Fig. 9

IMPORTANT

The vertical flue terminal is 1.0 metre in length and cannot be cut; therefore it may be necessary to adjust the height of the appliance to suit or use a suitable extension.

Connect the vertical flue assembly to the boiler flue spigot using the 60mm & 100mm clips, gaskets & screws (supplied), ensuring the correct seal is made. The flue support bracket (supplied with the vertical flue kit) can now be fitted.

If the vertical flue requires extension/s or additional bend/s, connect the required number of flue extensions or bends (up to the maximum equivalent flue length) between the boiler and vertical flue assembly (see fig. 8).

Ensure that any horizontal sections of the flue system have a 1° fall back to the boiler (17mm per 1000mm).

NOTE
When cutting an extension to the required length, you must ensure that the excess is cut from the plain end of the extension (see fig. 8). Remove any burrs and check that any seals are located properly.
You must ensure that the entire flue system is properly supported and connected.

4.5.3 TWIN FLUE SYSTEM

The Vokera twin flue system enables greater flue distances to be achieved (see 4.4.2) than that of a concentric flue system. It can be used for horizontal or vertical applications, however the twin flue system must be converted to the dedicated concentric flue kit for termination. It is essential that the installation of the twin flue system be carried out in strict accordance with these instructions.

GUIDANCE NOTES ON TWIN FLUE INSTALLATION

- The flue must have a fall back of 1° back to the appliance to allow any condensate that may form in the flue system to drain via the condensate drain. Consideration must also be given to the fact that there is the possibility of a small amount of condensate dripping from the terminal.
- Ensure that the entire flue system is adequately supported, use at least one bracket for each extension.
- The entire flue system must be adequately insulated to maintain heat within the flue system thereby reducing the possibility of condensate production.
- As the exhaust outlet pipe can reach very high temperatures it must be protected to prevent persons touching the hot surface.
- The condensate drain pipe must be connected in accordance with building regulations.

Reduction for bends

Bend	Reduction in maximum flue length for each bend
45° bend	1.0 metre
90° bend	1.0 metre

Twin flue accessories

Part No.	Description	Length
0225805	Horizontal flue terminal	1.0 metre
0225810	Vertical flue terminal	1.0 metre
359	Twin adapter kit	N/A
0225770	Pitched roof flashing plate	N/A
0225765	Flat roof flashing plate	N/A
0225815	Condensate drain kit	N/A
0225820	0.25m extension (pair)	250mm
0225825	0.5m extension (pair)	500mm
0225830	1.0m extension (pair)	1000mm
0225835	2.0m extension (pair)	2000mm
0225840	45° bend (pair)	N/A
0225845	90° bend (pair)	N/A
0225850	Twin bracket (5)	N/A
0225855	Single bracket (5)	N/A

MOUNTING THE BOILER
The fixing holes for the wall-mounting bracket should now be drilled and plugged, an appropriate type and quantity of fixing should be used to ensure that the bracket is mounted securely. Once the bracket has been secured to the wall, mount the appliance onto the bracket.
Pay attention to condense trap!

4.5.3.1 INSTALLATION OF TWIN ADAPTOR KIT (see fig. 10 & 11)

- Insert the exhaust connection manifold (**A**) onto the appliance flue outlet.
- Remove the blanking plate (located to the right of the appliance flue outlet) and - using the same screws - install the air inlet plate (**B**).
- Using the hole in the exhaust connection manifold as a guide, drill a 3mm hole in the appliance flue spigot and secure the exhaust manifold connection to the flue spigot using the screw provided (**C**).
- Using the two holes in the air inlet plate as a guide, drill a 3mm hole in each and secure the air inlet pipe/bend using the screws provided.
- The twin flue pipes extensions and accessories can now be installed by pushing together (the plain end of each extension or bend should be pushed approximately 50mm into the female socket of the previous piece).

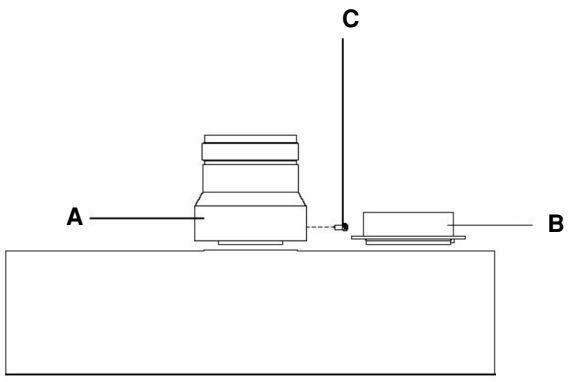

Fig. 10

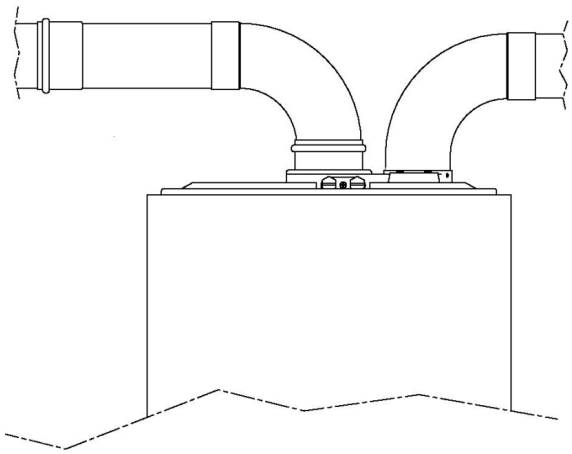
Fig. 11

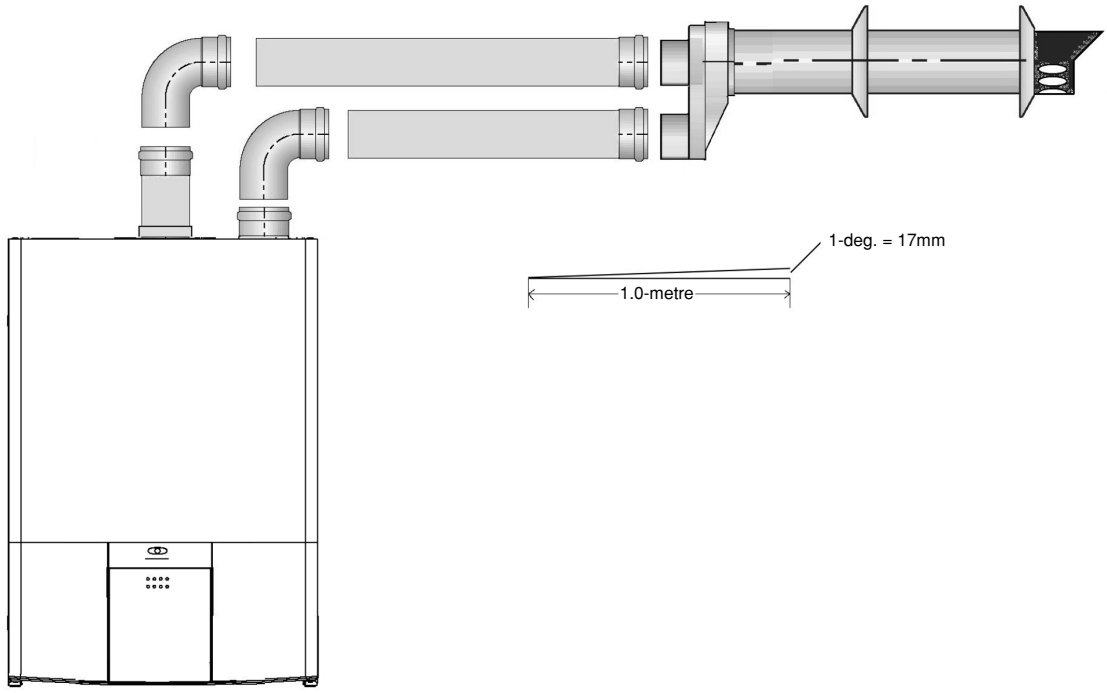

Fig. 12

4.5.3.2 HORIZONTAL TERMINATION (see fig. 12)

The twin flue system must be converted to the dedicated concentric flue kit for termination.

- The horizontal terminal is supplied with a built-in converter box and cannot be shortened.
- A 130mm hole is required for the passage of the concentric terminal through the wall.
- The air inlet pipe must always be level with or below, that of the exhaust pipe.

Depending on site conditions it may be preferable to install the terminal assembly prior to fitting the twin flue pipes.

Mark and drill a 130mm hole for the passage of the horizontal flue terminal, ensuring that there is a 1° fall back to the boiler (17mm per 1000mm). Insert the terminal assembly into the flue hole.

Push-fit the twin flue pipes onto the concentric to twin converter box ensuring that the exhaust pipe connects to the exhaust connection on the concentric to twin converter.

If necessary cut the plain ends (male) of the twin flue pipes to allow connection to the concentric to twin converter

NOTE

Before cutting twin flue pipes ensure allowances have been made for connection onto the previous piece and onto the concentric to twin converter. The last twin flue pipes must be pushed 50mm onto the male spigots of the concentric to twin converter.

NOTE

You must ensure that the entire flue system is properly supported and connected.

Seal the flue terminal assembly to the wall using cement or a suitable alternative that will provide satisfactory weatherproofing. The interior and exterior trim can now be fitted.

4.5.3.3 VERTICAL TERMINATION (see fig. 13)

The twin flue system must be converted to the dedicated concentric flue kit for termination.

- The vertical terminal is supplied with a built-in converter box and cannot be shortened.
- A 130mm hole is required for the passage of the concentric terminal through the ceiling and/ or roof.

Depending on site conditions it may be preferable to install the terminal assembly prior to fitting the twin flue pipes.

Fit the appropriate flashing plate to the roof and insert the vertical flue terminal through the flashing plate from the outside, ensuring that the collar on the flue terminal fits over the flashing.

Push-fit the twin flue pipes onto the concentric to twin converter ensuring that the exhaust pipe connects to the exhaust connection on the concentric to twin converter.

If necessary cut the plain ends (male) of the twin flue pipes to allow connection to the concentric to twin converter.

NOTE

- Before cutting twin flue pipes ensure allowances have been made for connection onto the previous piece and onto the concentric to twin converter. The last twin flue pipes must be pushed 50mm onto the male spigots of the concentric to twin converter.
- You must ensure that the entire flue system is properly supported and connected.
- Ensure that any horizontal sections of pipe have a 1° all towards the appliance (17mm per 1000mm).

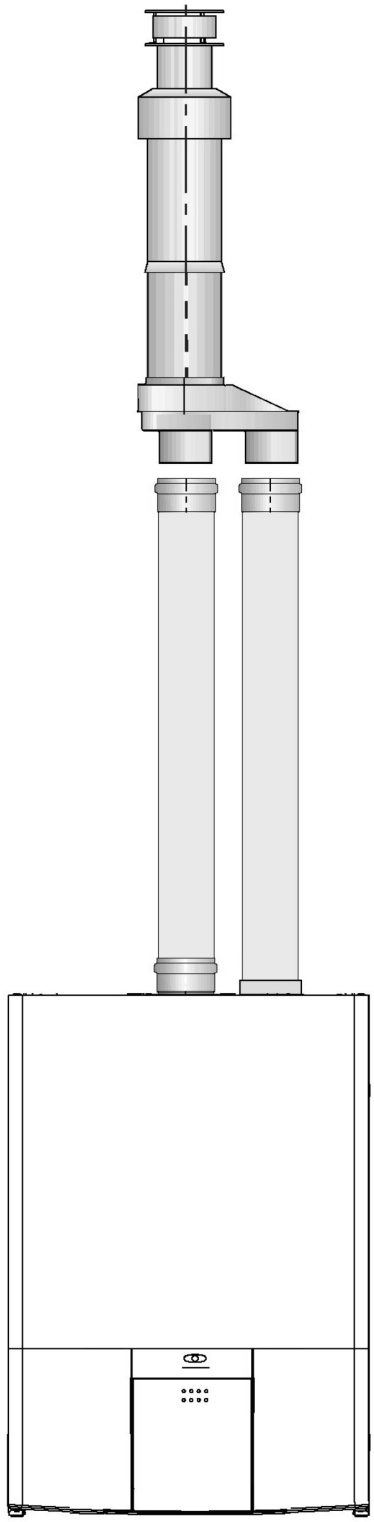

Fig. 13

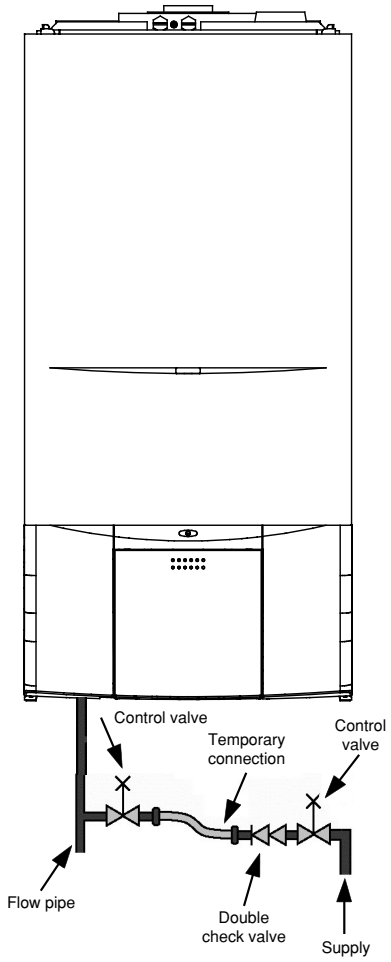

Fig. 14

4.6 CONNECTING THE GAS AND WATER

The appliance is supplied with service valves (fig. 14). The service valves are of the compression type. The accessories pack contains sealing washers etc, for use with the service valves.

When connecting pipe work to the valves, tighten the compression end first then insert the sealing washers before tightening the valve to the appliance.

NOTE

It will be necessary to hold the valve with one spanner whilst tightening with another.

4.6.1 GAS (see fig. 6A & 14)

The appliance is supplied with a 15mm service valve, connect a 15mm pipe to the inlet of the valve and tighten both nuts.

NOTE

It will be necessary to calculate the diameter of the gas supply pipe to ensure the appliance has an adequate supply of gas.

4.6.2 FLOW & RETURN (see fig. 6A & 14)

The appliance is supplied with 22mm service valves for the flow and return connections, connect a 22mm pipe to the inlet of each valve and tighten both nuts.

NOTE

Depending on system requirements, it may necessary to increase the size of the flow & return pipe work after the service valve connections.

4.6.3 SAFETY VALVE (see fig. 6A & 14)

Connect the safety valve connection pipe to the safety valve outlet. Connect a discharge pipe to the other end of the safety valve connection pipe and tighten. The discharge pipe must have a continuous fall away from the appliance to outside and allow any water to drain away thereby eliminating the possibility of freezing. The discharge pipe must terminate in a position where any water – possibly boiling – discharges safely without causing damage or injury, but is still visible.

4.6.4 CONDENSE PIPE

During normal operation the boiler produces condense which is collected in a trap located in the lower part of the boiler. A flexible pipe (condense outlet pipe) is connected to the outlet of the trap. The flexible pipe must be connected to a plastic waste pipe only. The plastic waste pipe must have a minimum of a 3° fall towards the drain. Any external run of pipe should be insulated to prevent the risk of freezing.

CONNECTING THE CONDENSATE OUTLET

Gently pull the condense outlet pipe down from its location inside the boiler until approximately 200mm protrudes from the underside of the boiler. Connect a suitable plastic (not copper) pipe (no less than 20mm diameter) to the outlet pipe and ensure it discharges in accordance with building regulations or other rules in force.

4.7 ELECTRICAL CONNECTIONS

The electrical supply must be as specified in section 3/3A. A qualified electrician should connect the electrical supply to the appliance. If controls - external to the appliance - are required, a competent person must undertake the design of any external electrical circuits, please refer to section 8 for detailed instructions. ANY EXTERNAL CONTROL OR WIRING MUST BE SERVED FROM THE SAME ISOLATOR AS THAT OF THE APPLIANCE. The supply cable from the isolator to the appliance must be 3-core flexible sized 0.75mm to BS 6500 or equivalent. Wiring to the appliance must be rated for operation in contact with surfaces up to 90°C.

4.7.1 CASING REMOVAL

To gain internal access to the appliance you must first remove the casing, proceed as outlined below:

- press the controls cover to release the controls cover catch
- locate and unscrew the 2 screws that secure the controls fascia to the appliance casing (see fig. 15)
- gently lower the control fascia until it rests
- remove the 2 screws located at the Left & Right of the underside of the casing
- lift the casing upward to disengage it from the top locating hooks and then remove
- store the casing and screws safely until required. Re-fit in the reverse order.

4.7.2 APPLIANCE TERMINAL BLOCK

The appliance terminal block is located on the left side of the control fascia (see fig. 15). Locate and remove the screws securing the terminal block cover.

NOTE

The appliance comes with a factory fitted link to allow basic operation of the boiler via the mode selector switch. If it is anticipated that external controls will be required please refer to the wiring diagrams in section 8 for more detailed information.

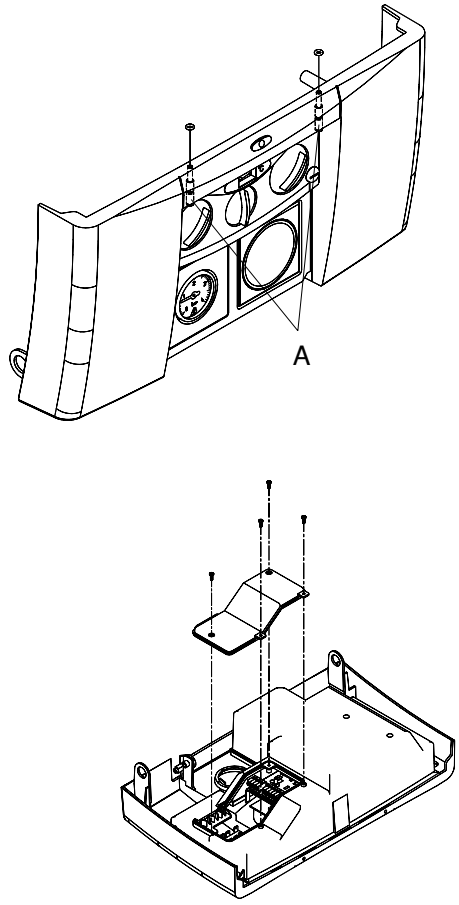

Fig. 15

4.7.3 CONNECTING THE MAINS (230V) INPUT (see fig. 16)

Remove the terminal block cover as described in 4.7.2. Pass the cable through the cable anchorage (see fig. 16). On the terminal block there are 7 terminals from Right to Left they are:

1. LIVE
2. NEUTRAL
3. 230V output
4. 230V input
5. (spare)
6. (spare)
7. (spare)
8. (spare)

Connect the supply cable wires (LIVE and NEUTRAL) to their corresponding terminals on the appliance terminal block. Connect the EARTH wire to the EARTH block (see fig. 16) ensuring that it's left slightly longer that the others, this will prevent strain on the EARTH wire should the cable become taut.

Do not remove the link wire (between 3 & 4) unless additional external controls are to be fitted (see section 8). Re-fit the appliance terminal block cover.

The securing screw on the cable anchorage should now be tightened. This must be done before the control fascia is re-fitted in the upright position. The appliance casing and screws can now be re-fitted.

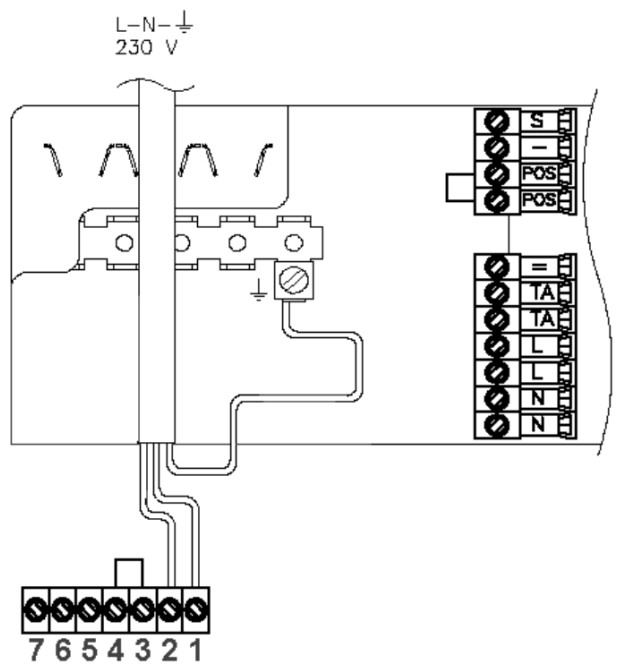

Fig. 16

Connect the supply cable wires (LIVE and NEUTRAL) to their corresponding terminals on the appliance terminal block. Connect the EARTH wire to the EARTH block (see fig. 16) ensuring that it's left slightly longer that the others, this will prevent strain on the EARTH wire should the cable become taut.

5.1 GAS SUPPLY INSTALLATION

Inspect the entire installation including the gas meter, test for soundness and purge. Refer to BS 6891 for specific instruction.

5.2 THE HEATING SYSTEM

The appliance contains components that may become damaged or rendered inoperable by oils and/or debris that are residual from the installation of the system, consequently it is essential that the system be flushed in accordance with the following instructions.

5.3 INITIAL FILLING OF THE SYSTEM

Ensure both flow and return service valves are open, remove appliance casing as described in 4.7.1, identify the automatic air release valve and loosen the dust cap by turning the cap anti-clockwise one full turn. IMPORTANT, THERE ARE NO MANUAL AIR RELEASE VALVES LOCATED ON THE APPLIANCE. Ensure all manual air release valves located on the heating system are closed. Using the approved method of filling (fig. 14), slowly proceed to fill the system, as water enters the system the pressure gauge will begin to rise. Once the gauge has reached 1 bar close both the inlet and service valves and begin venting all manual air release valves, starting at the lowest first. It may be necessary to go back and top-up the pressure until the entire system has been filled. Inspect the system for water soundness, rectifying any leaks.

5.4 INITIAL FLUSHING

The whole of the heating system must be flushed both cold and hot as detailed in 5.8. Open all radiator or heating valves and the appliance flow & return service valves. Drain the boiler and system from the lowest points. Open the drain valve full bore to remove any installation debris from the boiler prior to lighting. Refill the boiler and heating system as described in 5.3.

5.5 PRE-OPERATION CHECKS

Before attempting the initial lighting of the appliance, the following checks must be carried out:

- ensure all gas service valves from the meter to the appliance are open and the supply pipe has been properly purged
- ensure the proper electrical checks have been carried out, (see 7.7) particularly continuity, polarity and resistance to earth
- ensure the 3 amp fuse - supplied with the appliance - has been fitted
- ensure the system has been filled, vented and the pressure set to 1 bar
- ensure the flue system has been fitted properly and in accordance with the instructions
- ensure all appliance service valves are open.

5.6 INITIAL LIGHTING

Ensure the electrical supply to the appliance is switched on. Move the selector switch to the ON position, ensure any time clock or programmer is switched to an 'ON' position and ensure any other external controls are also calling for heat. The appliance will now operate in the heating mode as described in 1.3. Should the appliance fail to ignite, refer to 5.5 and/or section 7 (faultfinding).

5.7 CHECKING THE BURNER PRESSURE

Although the burner pressure is factory set, it is necessary to check it during commissioning. Isolate the appliance from the electrical supply and attach a suitable manometer to the gas valve outlet test-point (see fig. 17). Light the boiler as described in 5.6, allowing the appliance to stabilise. Compare the reading on the manometer with the value described in 2.3. If adjustment is required, follow the detailed instructions in section 7 (7.3).

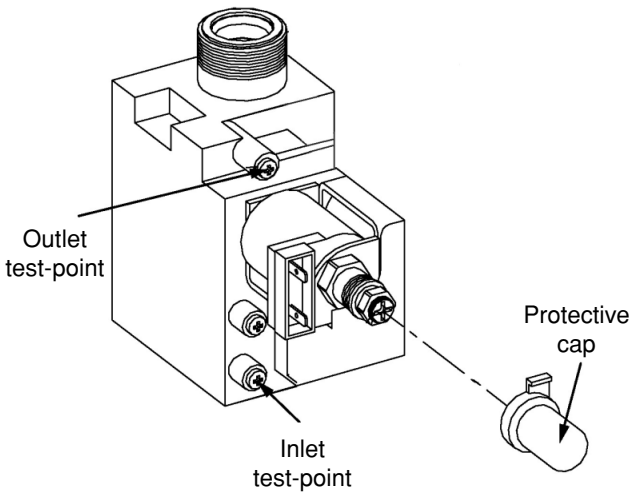

Fig. 17

Once the burner pressure has been checked, isolate the appliance from the electrical supply, remove the manometer and tighten the gas valve outlet test nipple.

5.8 FINAL FLUSHING OF THE HEATING SYSTEM

The system shall be flushed in accordance with BS 7593. If a cleanser is to be used, it shall be from a reputable manufacturer* and shall be administered in strict accordance with the manufacturers instructions.

*Both Sentinel and Fernox manufacture products that have proved suitable for use with Vokera appliances. Vokera Ltd. cannot comment on the suitability of any other such product with our appliances.

5.8.1 INHIBITORS

See Section 3 “General requirements”.

5.9 SETTING THE BOILER OPERATING TEMPERATURE

The flow outlet temperature can be adjusted between 40°C - 80°C via the thermostat knob (see fig.1).

5.10 SETTING THE SYSTEM DESIGN PRESSURE

The design pressure should be a minimum of 1 bar and a maximum of 1.5 bar.
The actual reading should ideally be 1 bar plus the equivalent height in metres (0.1 bar = 1 metre) to the highest point in the system above the base of the appliance (up to the maximum of 1.5 bar total).
N.B. The safety valve is set to lift at 3 bar/30 metres/45 psig.

To lower the system pressure to the required value, pull lever on head of safety valve to release water until the required figure registers on the pressure gauge (see fig. 1).

5.11 REGULATING THE CENTRAL HEATING SYSTEM

Fully open all radiator and circuit valves and run the appliance for both heating and hot water until heated water is circulating. If conditions are warm remove any thermostatic heads. Adjust radiator return valves and any branch circuit return valves until the individual return temperatures are correct and are approximately equal.

5.12 FINAL CHECKS

- ENSURE ALL TEST NIPPLES ON THE APPLIANCE GAS VALVE HAVE BEN TIGHTENED AND CHECKED FOR SOUNDNESS
- ENSURE THE APPLIANCE FLUE SYSTEM IS FITTED CORRECTLY AND IS PROPERLY SECURED
- ENSURE ALL PIPE WORK IS RE-CHECKED FOR SOUNDNESS
- RE-FIT APPLIANCE CASING
- COMPLETE APPLIANCE LOGBOOK.

Complete details of the boiler, controls, installation and commissioning in the logbook supplied with the boiler. This is an important document, which must be correctly completed and handed to the user. Failure to install and commission the appliance to the manufacturers instructions may invalidate the warranty.

5.13 INSTRUCTING THE USER

Hand over all documentation supplied with this appliance - including these instructions - and explain the importance of keeping them in a safe place.
Explain to the user how to isolate the appliance from the gas, water and electricity supplies and the locations of all drain points.
Show the user how to operate the appliance and any associated controls correctly.
Show the user the location of the filling valve and how to top-up the system pressure correctly and show the location of all manual air release points.
Explain to the user how to turn off the appliance for both long and short periods and advise on the necessary precautions to prevent frost damage.
Explain to the user that for continued safe and efficient operation, the appliance must be serviced annually by a competent person.

6.1 GENERAL

To ensure the continued safe and efficient operation of the appliance, it is recommended that it is checked and serviced at regular intervals. To ensure correct and safe operation of the appliance, it is essential that any worn or failed component be replaced only with a genuine Vokera spare part. The frequency of servicing will depend upon the particular installation conditions, but in general, once per year should be adequate. It is the law that any servicing work is carried out by competent person such as a Vokera engineer, an approved service agent, British Gas, or other CORGI registered personnel.
The following instructions apply to the appliance and its controls, but it should be remembered that the central heating and the domestic hot water systems would also require attention from time to time.

6.2 ROUTINE ANNUAL SERVICING

Check the operation of the appliance and ensure it functions as described in section 7. Compare the performance of the appliance with its design specification. The cause of any noticeable deterioration should be identified and rectified without delay.
Thoroughly inspect the appliance for signs of damage or deterioration especially the flue system and the electrical apparatus.
Check and adjust - if necessary - all burner pressure settings (see 7.3).
Check and adjust - if necessary - the system design pressure (see 5.10).
Carry out an analysis of the flue gases (see 7.4) and visually check the condition of the entire flue assembly.
Compare the results with the appliance design specification.
Any deterioration in performance must be identified and rectified without delay.
Ensure both flue venturis are clean and free from any debris or obstruction. Ensure the burner, main heat exchanger, and latent heat collector are clean and free from any debris or obstruction.

6.3 REPLACEMENT OF COMPONENTS

Although it is anticipated that this appliance will give years of reliable, trouble free service, the life span of components will be determined by factors such as operating conditions and usage. Should the appliance develop a fault, the fault finding section will assist in determining which component is malfunctioning.

6.4 COMPONENT REMOVAL PROCEDURE

To remove a component, access to the interior of the appliance is essential. Isolate the appliance from the electrical supply and remove the fuse. And when necessary, close all service valves on the appliance, remove the appliance casing as described in section 4.7.1 and drain the water content from the appliance via the safety valve. Ensure some water absorbent cloths are available to catch any residual water that may drip from the appliance or removed component. Undertake a complete commissioning check as detailed in section 5, after replacing any component. **ALWAYS TEST FOR GAS SOUNDNESS IF ANY GAS CARRYING COMPONENTS HAVE BEEN REMOVED OR DISTURBED.**

6.5 PUMP ASSEMBLY (see fig. 18)

Carry out component removal procedure as described in 6.4.
Disconnect and remove the ancillary items (3, 4, 5, 6, 7) from the pump assembly. Slacken and remove the securing screw (8) from the heating manifold. Disconnect the electrical cover & lead (1, 2). The pump assembly can now be removed from the heating manifold.
Replace in the reverse order.

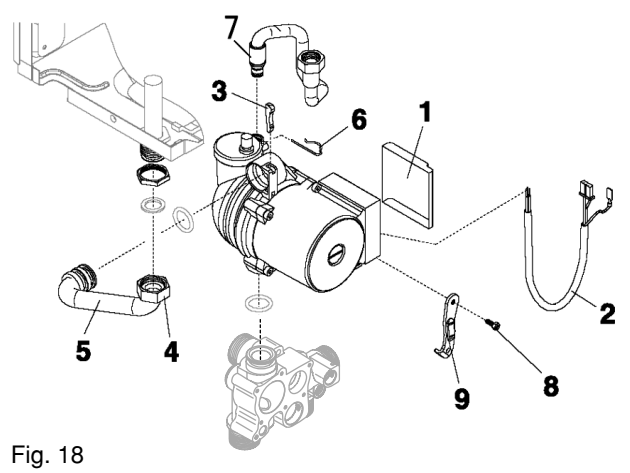

Fig. 18

6.6 SAFETY VALVE (see fig. 19)

Carry out component removal procedure as described in 6.4.
Disconnect the outlet pipe from the safety valve, remove safety valve locking screw (1) from the heating manifold. Replace in the reverse order.

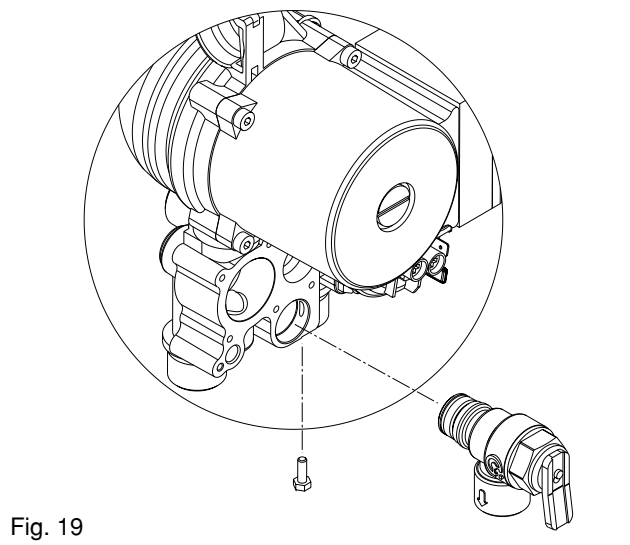
Fig. 19

6.7 AUTOMATIC AIR RELEASE VALVE (see fig. 18) (AAV)

Carry out component removal procedure as described in 6.4.

Using a suitable pair of pump pliers, unscrew the AAV from the rear of the pump assembly. Replace in the reverse order.

6.8 WATER PRESSURE SWITCH (see fig. 20)

Carry out component removal procedure as described in 6.4.

Remove locking screw (1) and the water pressure switch from the heating manifold, and - after taking note of the electrical connections - disconnect the wiring.

Replace in the reverse order.

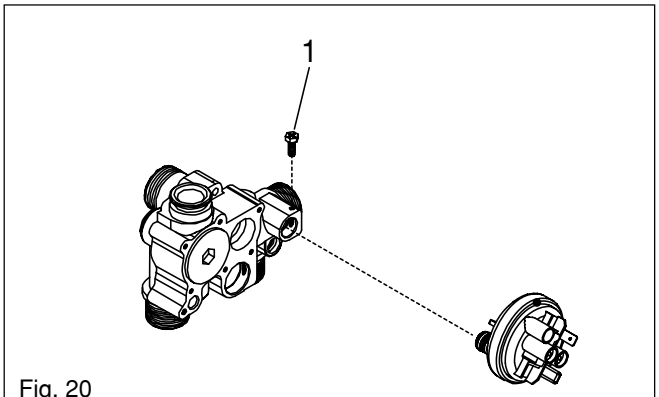

Fig. 20

6.9 PRESSURE GAUGE (see fig. 21)

Carry out component removal procedure as described in 6.4.

Remove pressure gauge locking screw (1), located on pump base, and withdraw the pressure gauge pipe (2), locate the spring tabs on the pressure gauge body, push and hold tabs in, to enable extraction of the gauge from its location.

Replace in the reverse order.

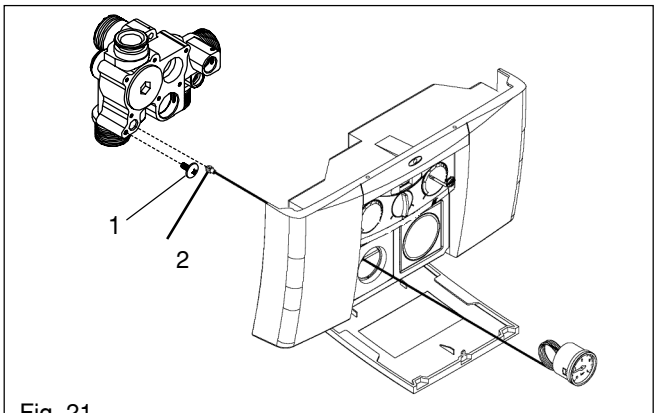

Fig. 21

6.10 PRIMARY THERMISTOR (see fig. 22)

Carry out component removal procedure as described in 6.4.

Unclip and remove the air chamber cover and remove the right side air baffle.

Disconnect thermistor electrical plug. Using a 13mm spanner slacken and remove the thermistor and sealing washer (1, 2) from the main heat exchanger.

Replace in the reverse order.

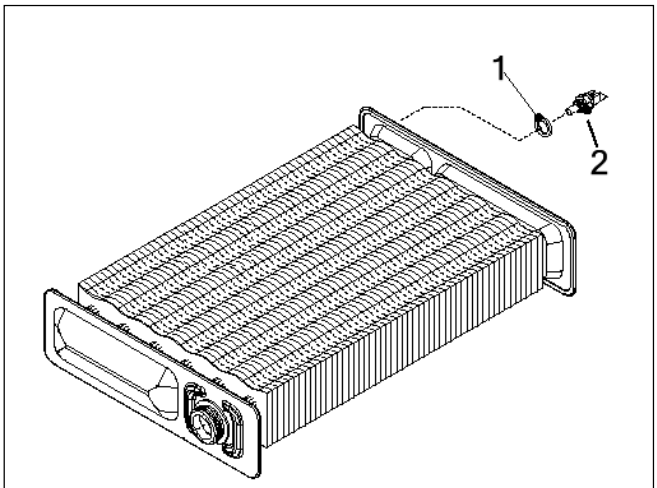

Fig. 22

6.11 HIGH LIMIT THERMOSTAT (see fig. 23)

Carry out component removal procedure as described in 6.4.

Unclip and remove the air chamber cover.

Pull off electrical connections from the high limit thermostat (2), slacken and remove retaining screws (3). Replace in reverse order.

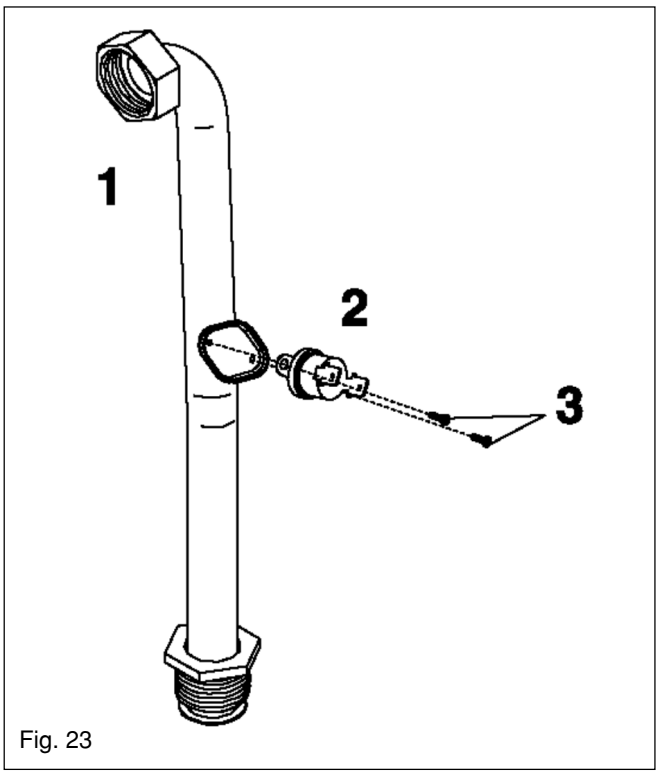

Fig. 23

6.12 PRINTED CIRCUIT BOARD (see fig. 24)

Carry out component removal procedure as described in 6.4.

Locate and remove the screws (1) which secure the PCB cover & terminal cover, then remove cover, after carefully taking note of all wiring connections, disconnect all wiring from the PCB, locate and remove the PCB securing screws (2, 3,), remove the required PCB (4, 5, 6). Replace in the reverse order.

NOTE

Ensure that any replacement PCB has the correct 'Jumper Tag' configuration (see section 8).

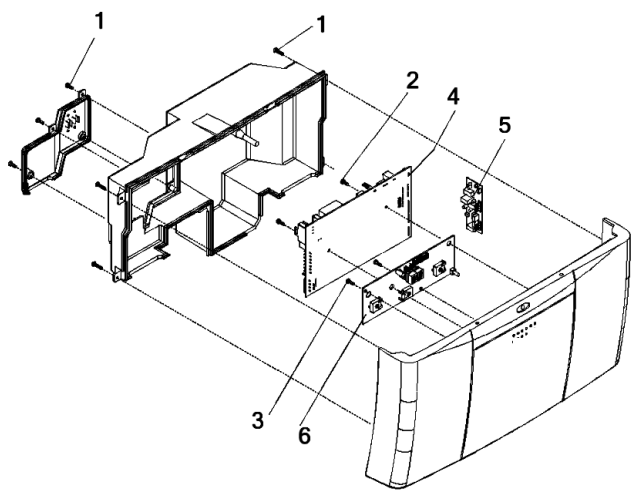

Fig. 24

6.13 GAS VALVE (see fig. 25)

Carry out component removal procedure as described in 6.4.

The gas valve must be changed as complete unit. Disconnect the electrical plug and leads from the gas valve. Slacken and unscrew gas valve inlet and outlet connections (3). **Please note,** the sealing washers (2) must be discarded and replaced with new sealing washers (2). Locate and remove gas valve retaining screws on the underside of the boiler if required, the gas valve can now be removed. Replace in the reverse order. Check and adjust burner pressure settings.

WARNING: A GAS SOUNDNESS CHECK MUST BE CARRIED OUT.

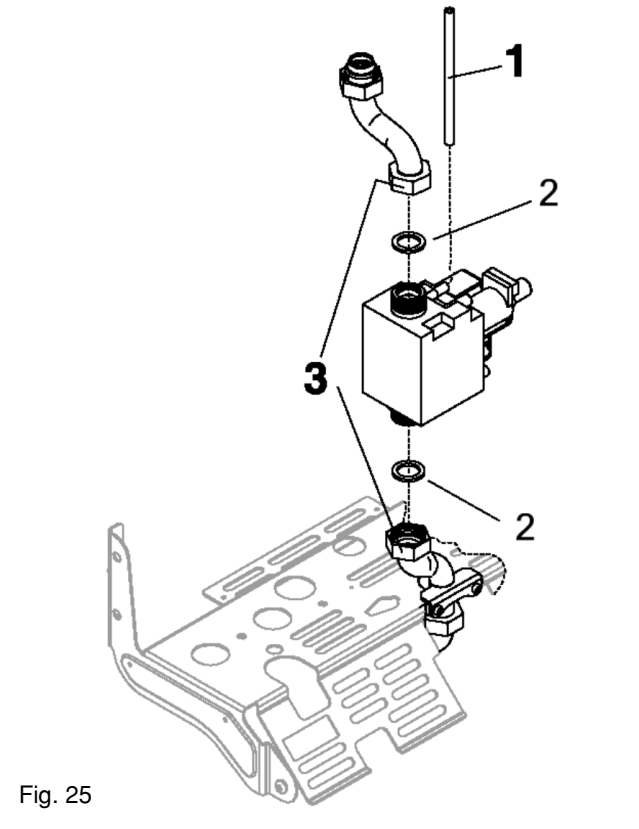

Fig. 25

6.14 INTEGRAL TIME SWITCH (if fitted)

Carry out component removal procedure as described in 6.4.

Locate and remove the terminal cover and securing screws (2), locate and remove the time clock retaining screws, remove time clock. Disconnect wiring after carefully taking note of all electrical connections.

Replace in the reverse order.

6.15 ELECTRODE, BURNER THERMOSTAT, BURNER & INJECTORS

Fig. 26: carry out component removal procedure as described in 6.4.

Unclip and remove the air chamber cover (2). Locate and remove the 6 screws securing the front combustion cover (3), pull the cover towards you before lifting and disengaging. Disconnect the electrode lead and burner thermostat from their respective connectors. Ease the electrode sealing grommet from its seating (4). Remove the retaining screw (6) for the burner thermostat and remove the thermostat (7).

Fig. 27: locate and remove the four screws which secure the burner in position (1), gently ease the burner out of its location. Once the burner has been removed, the electrode retaining screw can be can be removed. Locate the burner injectors (2) and remove (if necessary). Replace in the reverse order. Please note, the injector sealing washers (3) must be replaced if the injectors have been removed, ensure all seals are in good condition, taking care to ensure they are replaced correctly. Replace in the reverse order.

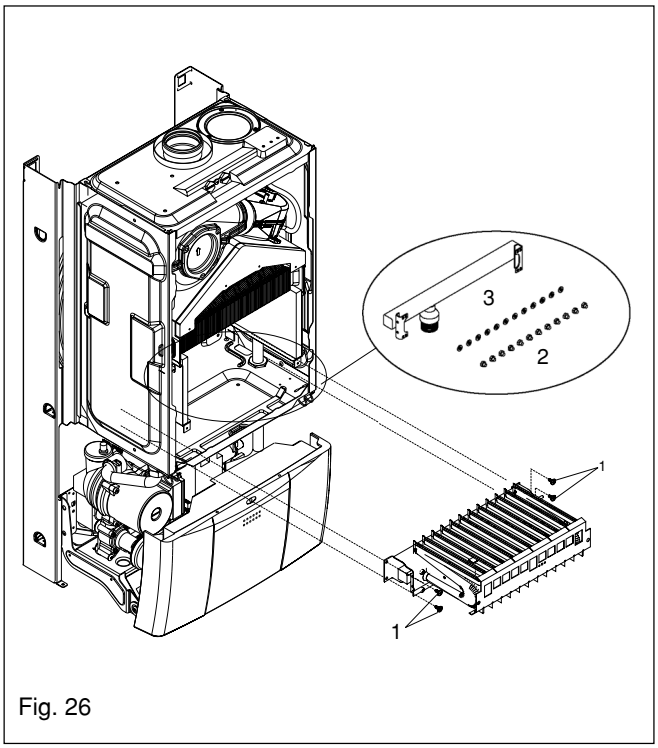

Fig. 26

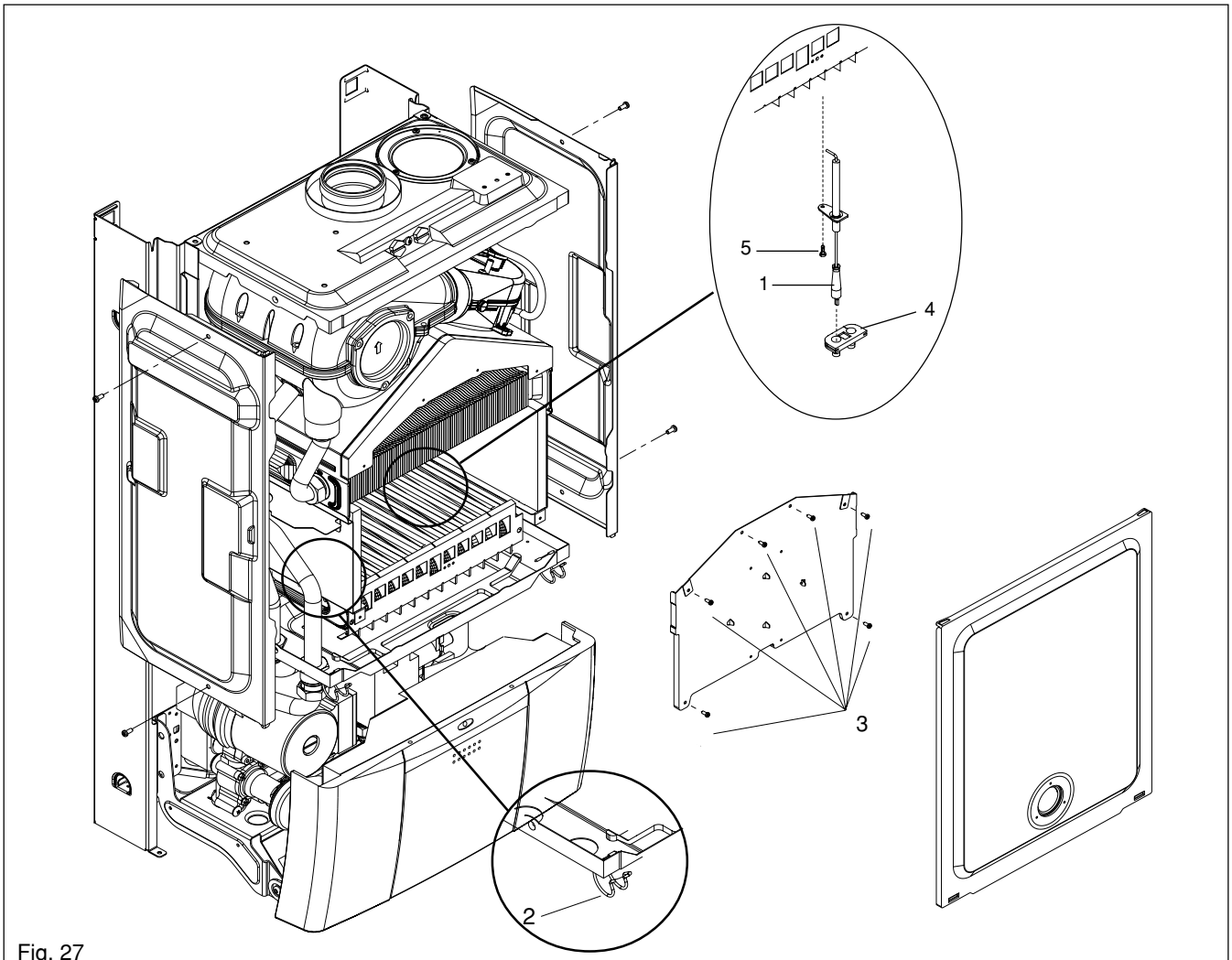

Fig. 27

6.16 FLUE FAN (see fig. 27 & 28)

Carry out component removal procedure as described in 6.4.

Fig. 27: unclip and remove the air chamber cover, gently pull the cover towards you before lifting and disengaging (2). Locate and remove the six screws that secure the front combustion cover, then remove the cover (3).

Fig. 28: disconnect the electrical connections and silicone tubes (10) attached to the fan, noting their positions. Locate and remove the screws (6) that secure the analogue pressure switch assembly (4 & 5). Locate and remove the screws that secure the flue hood and air baffle, disconnect the flue clip (1) from the fan-flue elbow, and gently ease the fan (3) & flue hood assembly (2) from its location. Locate and remove the four screws that secure the fan to the flue hood. Remove the fan to flue elbow. Replace in the reverse order. Ensure all seals are in good condition, taking care to ensure they are replaced correctly.

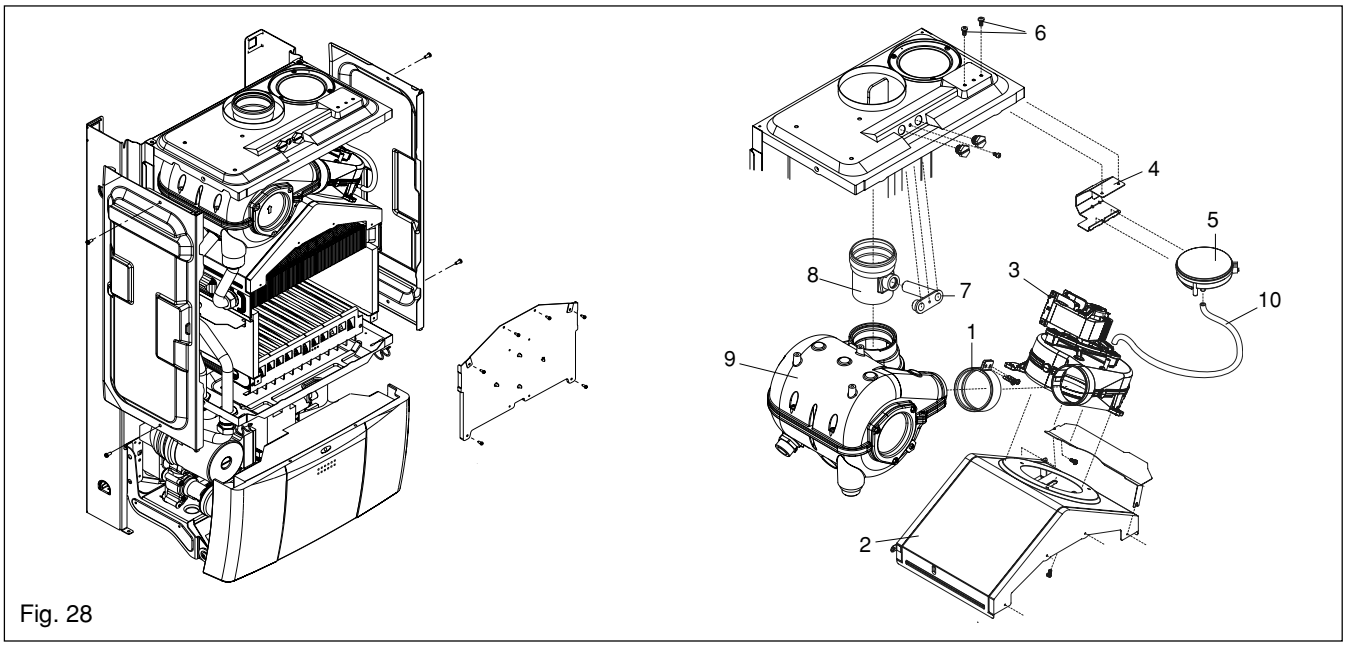

Fig. 28

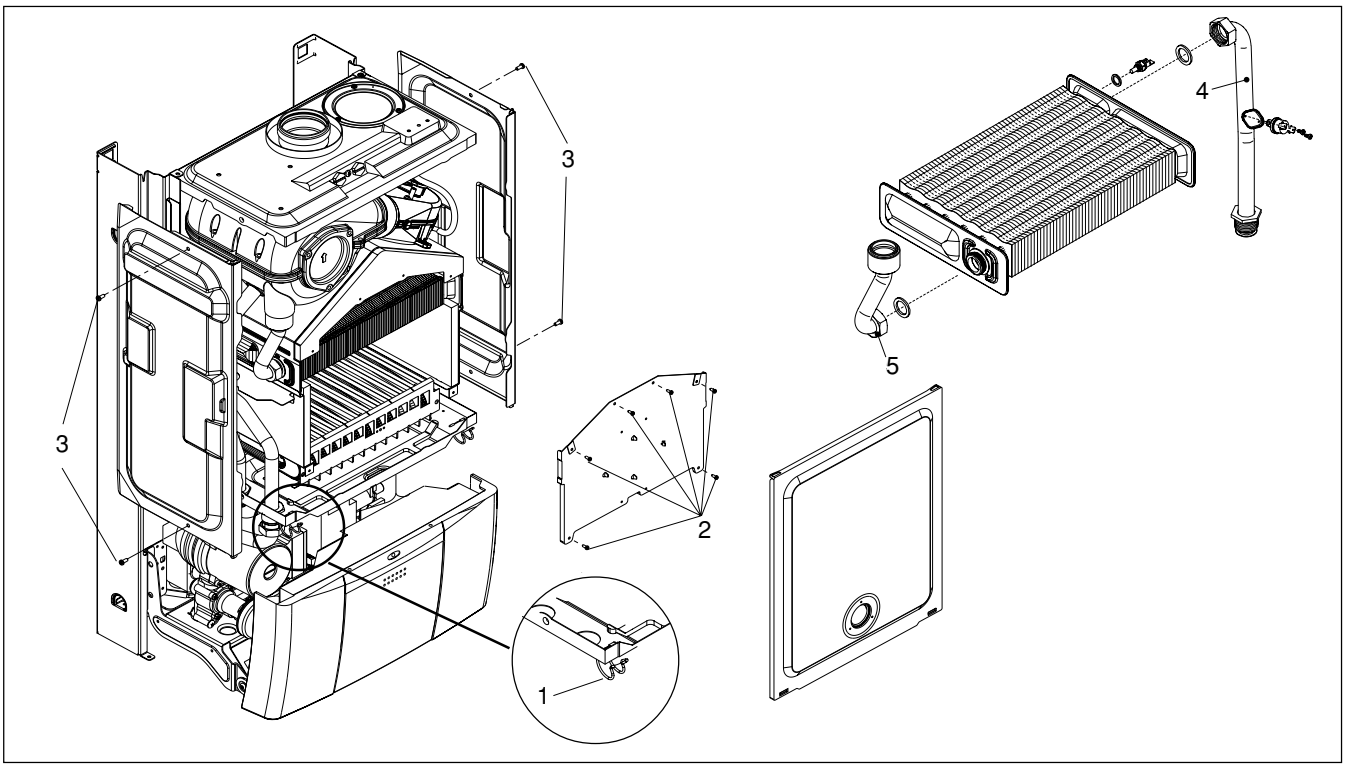

6.17 MAIN HEAT EXCHANGER (see fig. 27 & 29)

Carry out component removal procedure as described in 6.4.

Fig. 27: unclip and remove the air chamber cover, gently pull the cover towards you before lifting and disengaging (2). Locate and remove the six screws that secure the front combustion cover, then remove the cover (3).

Fig. 29: remove the air chamber side panels if necessary by unscrewing the securing screws (3). Disconnect the flow and return connections (4, 5) on the heat exchanger. The heat exchanger can now be withdrawn from the appliance. Replace in the reverse order. Ensure all seals are in good condition, taking care to ensure they are replaced correctly.

6.18 AIR PRESSURE SWITCH (see fig. 27 & 28)

Carry out component removal procedure as described in 6.4.

Fig. 27: unclip and remove the air chamber cover, gently pull the cover towards you before lifting and disengaging (2).

Fig. 28: locate and remove the two screws (6) holding the air pressure switch to the air chamber. Disconnect the electrical connections and silicone tubes (10) attached to the air pressure switch, noting their positions. Replace in the reverse order. Ensure all seals are in good condition, taking care to ensure they are replaced correctly.

6.19 AUTOMATIC BYPASS (see fig. 30)

Carry out component removal procedure as described in 6.4.

Disconnect and remove the flow pipe at the heating manifold (1) and at the connection to the air chamber. Using a hooked piece of wire, carefully withdraw the bypass cartridge (2). Ensure all seals are in good condition, taking care to ensure they are replaced correctly. Replace in the reverse order ensuring the cartridge is facing the correct way.

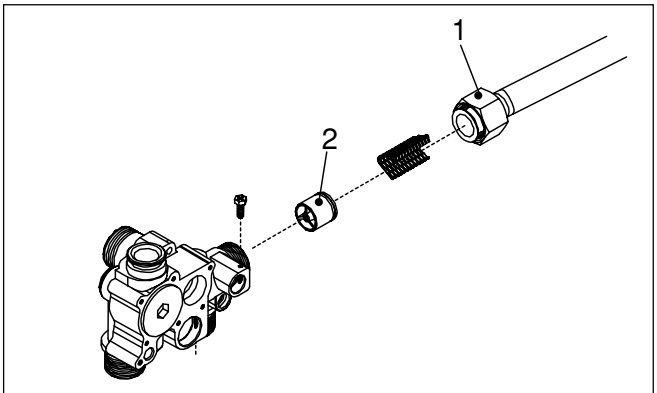

Fig. 30

6.20 EXPANSION VESSEL fig. 1

Should the removal and replacement of the expansion vessel be deemed impractical, an external expansion vessel may be fitted to the return pipe as close to the appliance as possible.

6.20.1 EXPANSION VESSEL REMOVAL (with sufficient clearance above)

Carry out component removal procedure as described in 6.4. Disconnect the flue from the appliance. Disconnect the flexible expansion pipe from the vessel (fig. 31). Locate and remove the four screws that secure the vessel top holding plate, remove the plate. The expansion vessel can now be removed. Replace in the reverse order. Ensure all seals are in good condition, taking care to ensure they are replaced correctly.

6.20.2 EXPANSION VESSEL REMOVAL (with insufficient clearance above)

Carry out component removal procedure as described in 6.4. Disconnect the flue elbow or pipe from the appliance flue outlet. Unclip and remove the air chamber cover, gently pull the cover towards you before lifting and disengaging. Remove the RH side panel of the air chamber. Disconnect the wiring to the fan, pressure switch, primary thermistor & overheat thermostat.

Carefully unclip the wires from the air chamber and withdraw the wiring & grommet from the air chamber. Disconnect the electrode lead and burner thermostat wires. Disconnect the outlet gas pipe, the flow & return pipes and the condense pipe from the air chamber.
Locate and remove the 2-screws that secure the lower section of the air chamber. Locate and remove the 2-screws that secure the upper section of the air chamber. The complete air chamber assembly can now be lifted clear from the appliance. Disconnect the flexible expansion pipe from the vessel (fig. 31). Locate and remove the 2-screws that secure the vessel (1). The expansion vessel can now be removed. Replace in the reverse order. Take extreme care when refitting the wiring to the air chamber. Ensure all seals are in good condition, taking care to ensure they are replaced correctly.

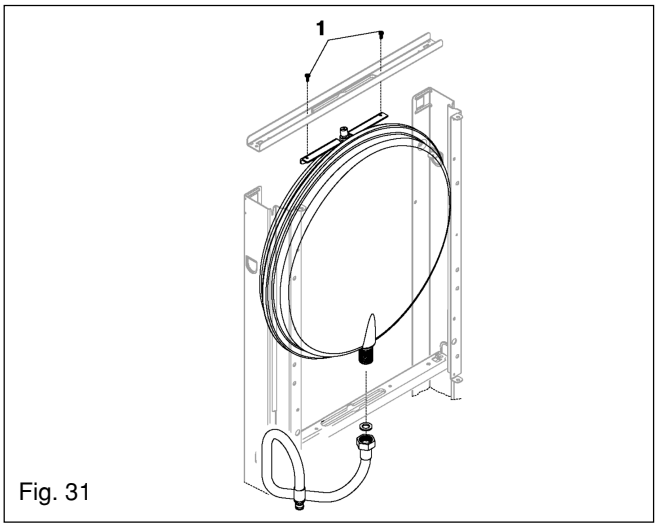

Fig. 31

6.21 LATENT HEAT COLLECTOR fig's. 32 & 33

Carry out component removal procedure as described in 6.4. Remove the flue hood and fan assembly as detailed in 6.16. Disconnect the condense sensor wire from the sensor.

Fig. 32: disconnect and remove the inlet (1), outlet (3) and condense pipes (2) from the collector.

Fig. 33: unscrew and remove the 3 screws (1) that secure the collector to the air chamber and disconnect the collector (2) from the flue connection. Replace in the reverse order ensuring all seals are intact and located correctly.

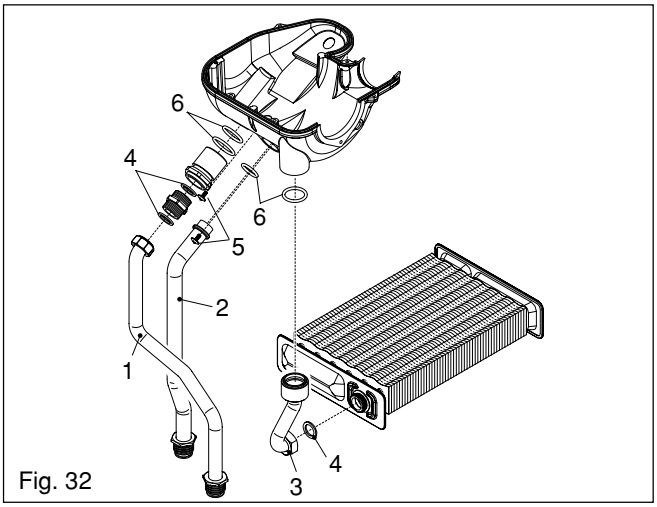

Fig. 32

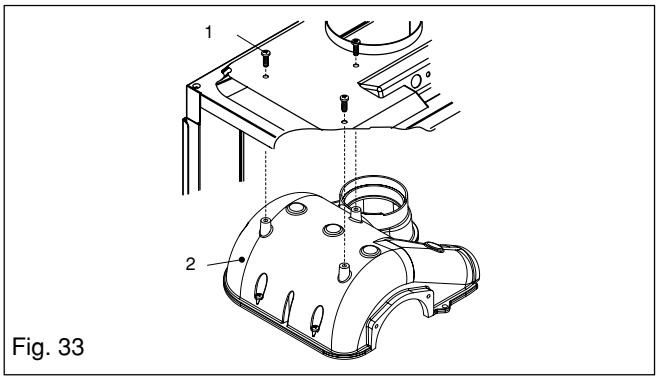

Fig. 33

6.21A DISMANTLING THE LATENT HEAT COLLECTOR (see fig. 34)

During routine servicing or maintenance, there is no requirement to remove or dismantle the collector, however should it be deemed necessary to dismantle the collector, all seals should be discarded and replaced with new ones.

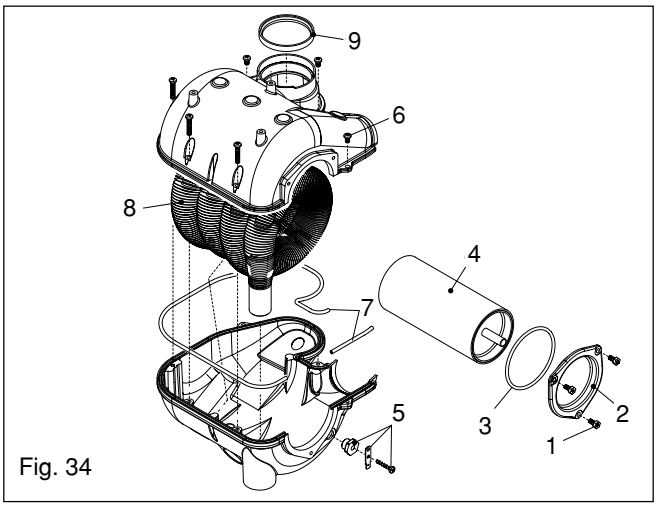

Fig. 34

6.22 CONDENSE TRAP REMOVAL (see fig. 35)

Carry out component removal procedure as described in 6.4. Disconnect the flexible (outlet) condense pipe from the condense trap (1). Disconnect the rigid (inlet) condense pipe from the condense trap (2). Locate and remove the pins that secure the trap to the lower frame of the boiler (3). Carefully remove the condense trap. Replace in the reverse order. If necessary remove the upper connection of the pipe (4).

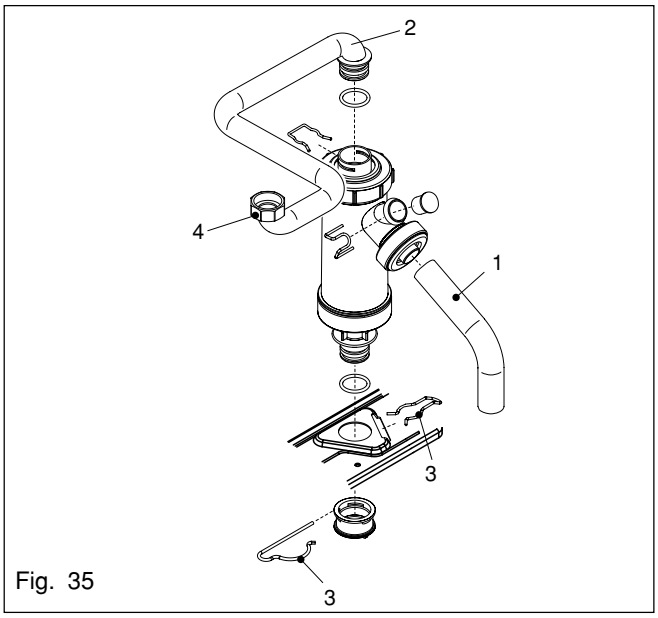

Fig. 35

7.1 CHECKING APPLIANCE OPERATION

When carrying out any repairs or servicing to the appliance, the relevant commissioning procedure must be undertaken to ensure the continued safe operation of the appliance. Particular attention should be made to ensure gas soundness, water soundness, and the electrical integrity of the appliance.

7.2 APPLIANCE MODE OF OPERATION

NOTE: there must be sufficient system water pressure (min. 0.5 bar) to ensure the water pressure switch is activated. If there is insufficient system pressure the pump and fan will be prevented from operating.

7.2.1 SELECTOR SWITCH IN THE OFF POSITION

When the selector switch is in the OFF position, there is no LED display or LED status indicator. The appliance will not respond to any heating/ HW requests.

Active Functions:

- frost-protection system
- pump anti-block.

7.2.2 SELECTOR SWITCH IN THE ON POSITION

When the selector switch is in the ON position, the status LED is illuminated and the LED display shows the current temperature measured at the thermistor.

Active Functions:

- frost-protection system
- pump anti-block
- fan anti-block.

7.2.3 APPLIANCE FUNCTIONS

- **Frost-protection:** this function is only active when there are no requests for heating or HW. Should the temperature of the primary thermistor drop below 7°C, the pump will be activated for approximately 20-minutes. Should the temperature of the primary thermistor exceed 10°C during this period, the cycle will be aborted. If the temperature drops below 4°C, the boiler will operate on minimum power until the temperature of the primary thermistor reaches 30°C. Thereafter the pump & fan will over-run for 30-seconds.
- **Anti-block cycle:** when there has been no heating or HW request for 19-hours, the anti-block cycle is activated. The pump will be activated for a period of 1-minute if the selector switch is in the ON position, the fan will also be active for 1-minute.

7.2.4 HEATING/HW MODE

With the selector switch in the ON position and any additional controls (time clock, room thermostat, etc,) calling for heat, the appliance will operate in the heating/HW mode. The pump and fan will be active. The operation of the fan causes the analogue pressure switch (PAD) to deliver a signal voltage to the control PCB. If the signal voltage is sufficient a slow ignition sequence is enabled, whereby the current supplied to the gas valve modulating coil is progressively increased from minimum to maximum over a period of 8-seconds. During this period the ignition electrode sparks continuously even if the burner has ignited.

NOTE

If the spark/sensing electrode does not sense ignition the appliance will then go to lockout.

Ignition is sensed by the electronic circuitry to ensure flame stability at the burner. Once successful ignition has been achieved, the electronic circuitry allows 75% of the full gas rate through the appliance. After 15 minutes the gas rate is increased to maximum (100%).

When the set-point has been reached (the position of the temperature selector) as measured at the primary thermistor, the appliance will begin the modulation phase whereby the fan and gas valve will continuously modulate to maintain the set-point. If the temperature continues to rise and exceeds the set-point by 6°C, the burner will shut down and the boiler will perform a three-minute anti-cycle (timer delay).

A new ignition sequence will be enabled when the 3-minute anti-cycle has been performed and the temperature at the primary thermistor has dropped 6°C below the set-point.

NOTE

The timer delay can be de-activated by the insertion of a 'jumper' on the PCB or by isolating the appliance from the electrical supply for 30 seconds.

When the request for heating/HW has been satisfied, the appliance pump and fan may continue to circulate to dissipate any residual heat within the appliance.

7.3 CHECKING AND ADJUSTING BURNER PRESSURE (see fig. 17)

Although the burner pressure is factory set, it is necessary to check it during servicing or if the gas valve has been removed.

Isolate the appliance from the electrical supply and attach a suitable manometer to the gas valve outlet test nipple.

7.3.1 SETTING THE MAXIMUM BURNER PRESSURE (see fig. 36)

Light the boiler as described in 5.6 and compare the reading on the manometer with the value described in 2.3. If adjustment is required, remove the protective cap from the gas valve modulating coil assembly and turn the outer (10mm) nut clockwise to increase, or counter-clockwise to decrease the burner pressure.

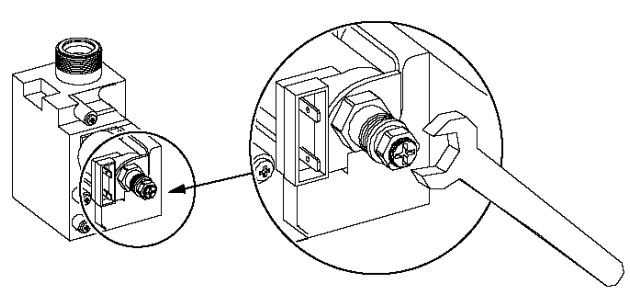

Fig. 36

NOTE
Always check and/or adjust the minimum and maximum gas pressures whilst the appliance is heating the radiators and HW cylinder.

7.3.2 SETTING THE MIMIMUM BURNER PRESSURE (see fig. 37)

Once the maximum burner pressure has been checked and/or adjusted, remove one of the grey wires from the modulating coil. Compare the reading on the manometer with the value described in 2.2. If adjustment is required, turn the inner (red) crosshead screw clockwise to increase, or counter-clockwise to decrease the burner pressure, whilst ensuring that the outer (10mm) nut does not move. When checking and/ or adjustment has been completed, isolate the appliance from the electrical supply, replace the protective cap, refit the grey wire to the modulating coil, remove the manometer, and tighten the outlet test nipple.

IMPORTANT, A GAS SOUNDNESS CHECK MUST BE CARRIED OUT.

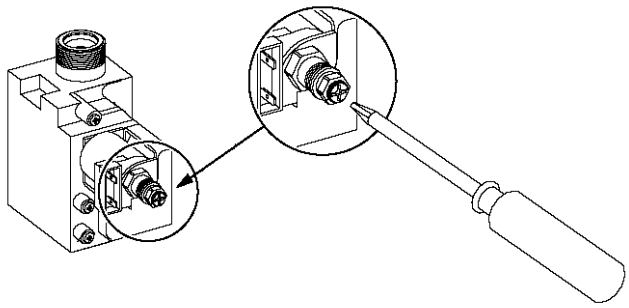

Fig. 37

7.4 COMBUSTION ANALYSIS TEST

A combustion analysis check can easily be carried out on the appliance via the test points located on the top of the appliance, however you must check that the burner pressures are set correctly (see 7.3).

- Insert the flue gas analyser probe into the right hand test point (see fig 38).
- Locate and remove the protective cap that conceals the 'CO mode' button (see fig. 38).
- Light the boiler as described in 5.6 and press the 'CO mode' button once.
- The boiler will now enter the combustion analysis mode (CO mode) for a period of 15 minutes. During this time it will remain on full gas and 'CO' will be displayed on the LED display.
- Once the flue gas analysis has been made, press the 'CO mode' to resume normal operation.

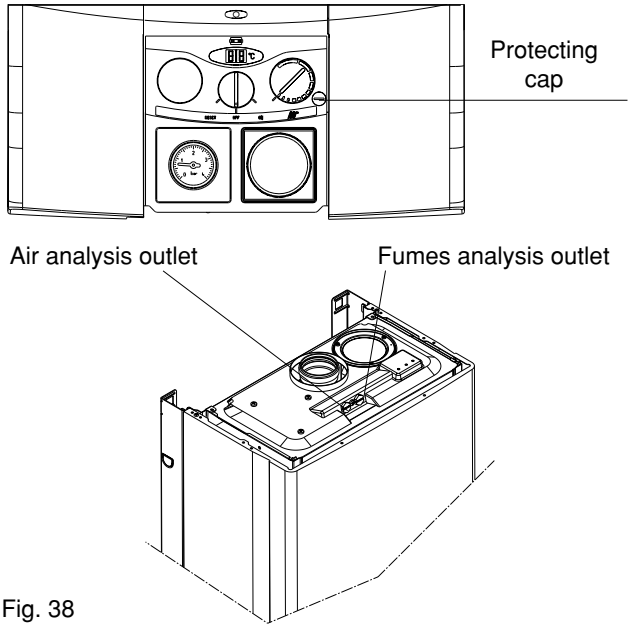

Fig. 38

7.5 CHECKING THE EXPANSION VESSEL

Carry out the component removal procedure as described in 6.4. You must ensure that the boiler is completely drained of water.

Using a suitable pressure gauge, remove dust cap on expansion vessel and check the charge pressure. The correct charge pressure should be 1.0 bar ± 0.1 bar.

IIf the charge pressure is less, use a suitable pump to increase the charge.

NOTE
You must ensure the safety valve is in the open position whilst re-charging takes place. Replace the dust cap and carry out the relevant commissioning procedure (section 5).

7.6 EXTERNAL FAULTS

Before carrying out any faultfinding or component replacement, ensure the fault is not attributable to any aspect of the installation.

7.6.1 INSTALLATION FAULTS

Symptom	Possible causes
No ignition	Check wiring Check electrical supply
No HW or heating	Check wiring of time clock and/or external thermostats

Fault code	Possible causes
01	Gas supply problem Gas line requires purging Reversed polarity Broken, internal flue joint
02	Flow/return valves closed Stuck pump
03	Debris in flue system Debris in flue venturi
04	Insufficient water pressure Air in boiler

7.7 ELECTRICAL CHECKS

Any electrical checks must be carried out by a suitably qualified person.

7.7.1 EARTH CONTINUITY TEST

Isolate the appliance from the electrical supply, and using a suitable multi-meter carry out a resistance test. Connect test leads between an appliance earth point and the earth wire of the appliance supply cable. The resistance should be less than 1 OHM. If the resistance is greater than 1 OHM check all earth wires and connectors for continuity and integrity.

7.7.2 SHORT CIRCUIT CHECK

Isolate the appliance from the electrical supply, and using a suitable multi-meter, carry out a short circuit test between the Live & Neutral connections at the appliance terminal strip (fig.16). Repeat above test on the Live & Earth connections at the appliance terminal strip (fig.16).

NOTE

Should it be found that the fuse has failed but no fault is indicated, a detailed continuity.
Check will be required to trace the fault. A visual inspection of components may also assist in locating the fault.

7.7.3 POLARITY CHECK

With the appliance connected to the electrical supply and using a suitable multimeter, carry out the following voltage tests:

- connect test leads between the Live & Neutral connections at the appliance terminal strip (fig.16). The meter should read approximately 230V ac. If so proceed to next stage. If not, see 7.7.4.
- connect test leads between the Live & Earth connections at the appliance terminal strip (fig.16). The meter should read approximately 230V ac. If so proceed to next stage. If not, see 7.7.4.
- connect test leads between the Neutral & Earth connections at the appliance terminal strip (fig.16). The meter should read approximately 0 - 15Vac. If so polarity is correct. If not, see 7.7.4.

7.7.4 REVERSED POLARITY OR SUPPLY FAULT

Repeat the above tests at the appliance isolator, if testing reveals correct polarity and/or supply at the isolator, re-check wiring and connections between the isolator and the appliance.
If tests on the isolator also reveal reversed polarity or a supply fault, consult the local electricity supplier for advice.

7.7.5 RESISTANCE TO EARTH CHECK

Isolate the appliance from the electrical supply, and using a suitable multi-meter carry out a resistance test. Connect test leads between the Live & Earth connections at the appliance terminal strip (fig.16). If the meter reads other than infinity there is a fault that must be isolated, carry out a detailed continuity check to identify the location of the fault.

IMPORTANT

These series of checks must be carried out before attempting any faultfinding procedures on the appliance. On completion of any task that required the disconnection and re-connection of any electrical wiring or component, these checks must be repeated.

7.8 FAULT FINDING

Before attempting any faultfinding, the electrical checks as detailed in 7.7 must be carried out.
Isolate the appliance from the electrical supply. Disconnect any external controls from terminals TA & Spare of the appliance terminal strip, and make safe. Insert a solid link-wire between terminals 3 & 4.
Ensure jumper tags are fitted to the main PCB at:

- JP5
- JP7
- JP8 (Nat. Gas only)
- M7

Restore the electrical supply to the boiler and turn the selector switch to the on position. The boiler should now function as described in section 7.2. Should the boiler fail to respond, the internal fuses and connectors should be checked to ensure integrity and continuity. If the boiler still fails to respond, refer to the detailed faultfinding flowcharts overleaf.

7.9 FAULT CODES

When the boiler displays a fault code, the appropriate code is shown on the display, accompanied by a flashing red LED. To reset the boiler, slowly turn the mode selector switch to the reset position then back to the on position. If the boiler does not reset, refer to the following section and the detailed faultfinding flowcharts overleaf.

FAULT CODE 01
Fault code 01 appears when the burner has failed to ignite, or the flame supervision system has failed to detect a flame. • Check incoming gas supply • Check spark electrode • Check polarity • Check integrity of flue system • Check gas valve • Check ignition control PCB

FAULT CODE 02
Fault code 02 appears if the boiler has overheated. • Check high limit thermostat • Check thermistors • Check pump • Check gas pressures

FAULT CODE 03
Fault code 03 appears if the boiler or flue system has developed a fault. • Check operation of fan • Check flue venturi • Check analogue pressure switch • Check flue system

FAULT CODE 04
Fault code 04 appears if the pressure in the boiler is low. • Check water pressure • Check water pressure switch • Check water pressure gauge

FAULT CODE 05
Fault code 05 appears if the appliance is connected to the optional remote control (RC05) and there is a communication problem. • Check wiring between RC05 and appliance

FAULT CODE 06
Fault code 06 appears if a problem exists with the jumper tags configuration of the PCB. • Check jumper tag configuration

FAULT CODE 07
Fault code 07 appears if a problem exists with the primary thermistor. • Check thermistor • Check wiring continuity

FAULT CODE 08
Fault code 08 appears if the burner thermostat has been activated. • Check gas pressures • Check burner thermostat • Check wiring continuity

FAULT CODE 09
PCB fault

FAULT CODE d1
Fault code d1 appears if the condense trap/pipe has become blocked. • Ensure the condense trap is clear • Ensure the condense pipe is clear

FAULT CODE d2
Fault code d2 appears if a problem exists with the condense sensor. • Check wiring continuity • Check condense sensor

FAULT FINDING TEST ‘A’: turn the selector switch to the reset position

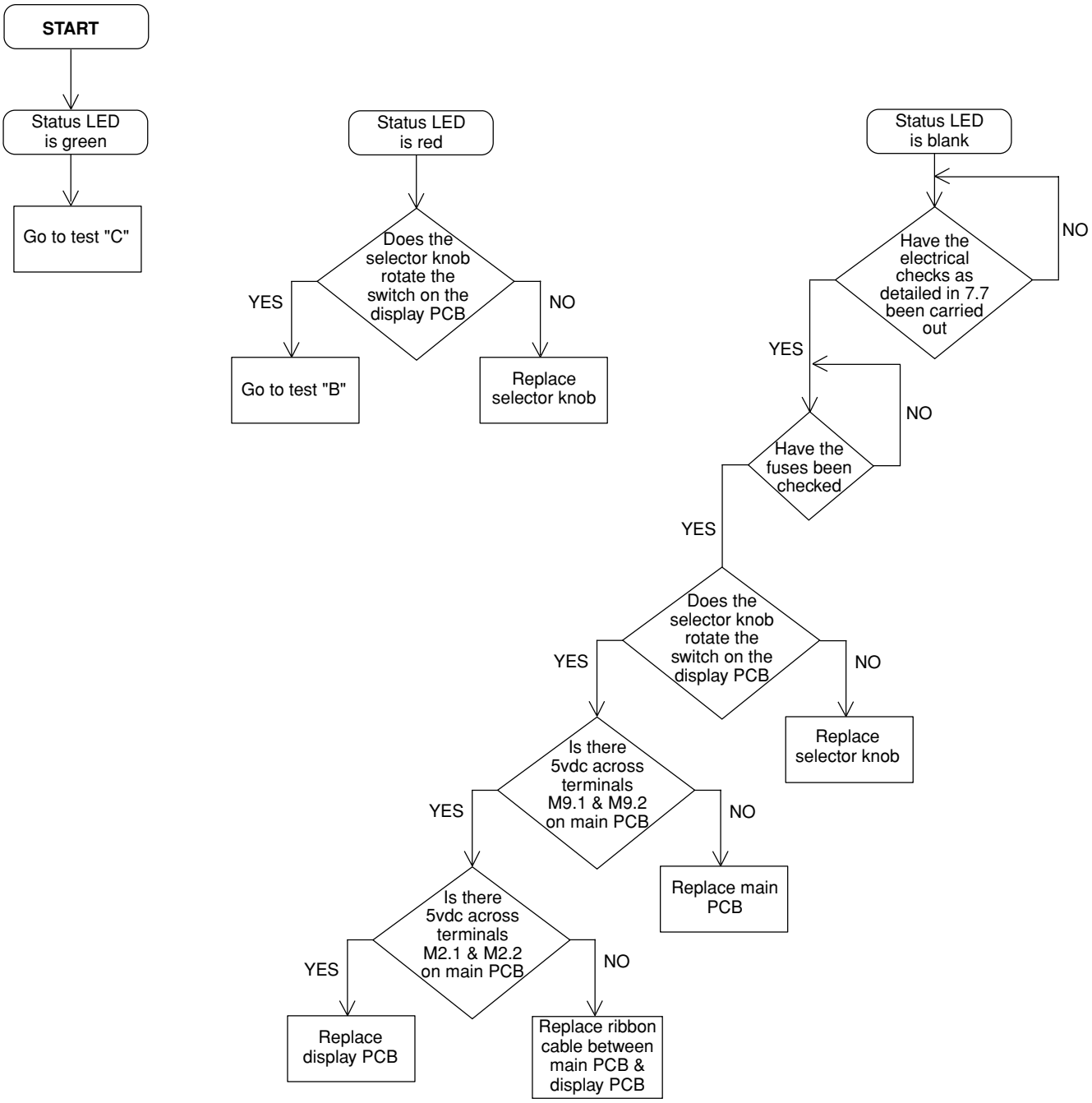

FAULT FINDING TEST ‘B’: turn the selector switch to the “on” position

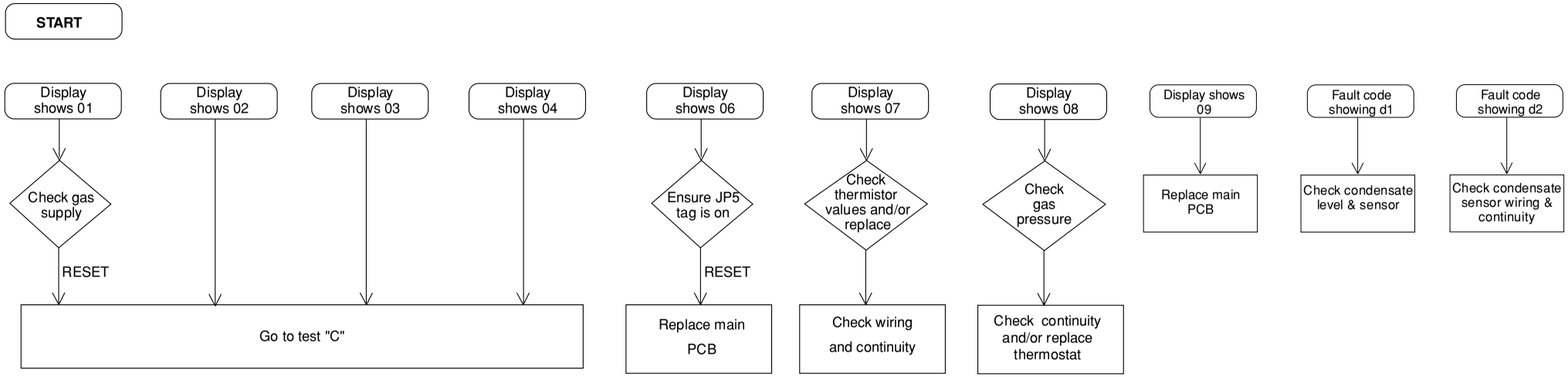

FAULT FINDING TEST ‘C’: turn the selector to the “on” position

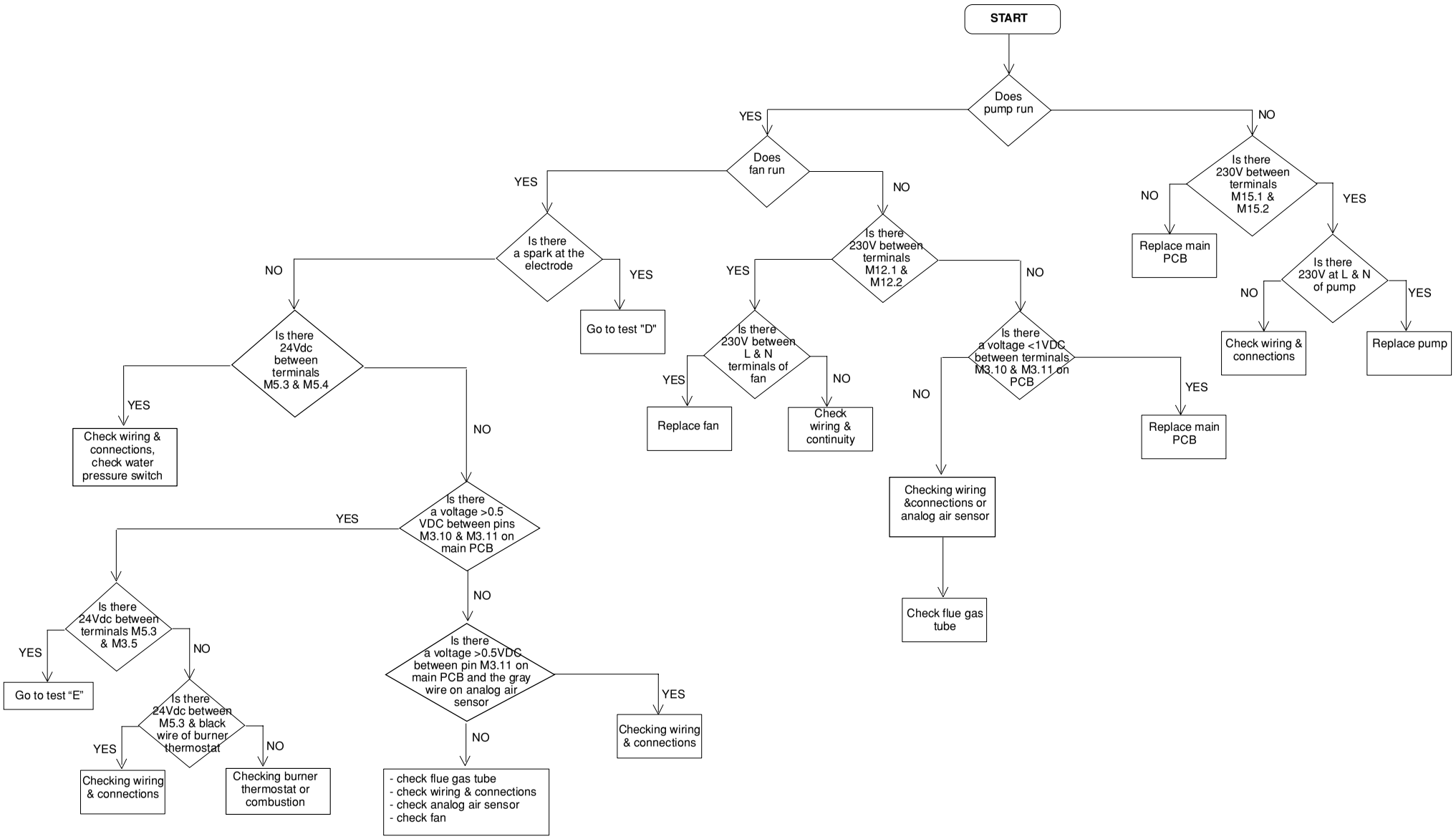

FAULT FINDING TEST 'D': turn the selector to the "on" position

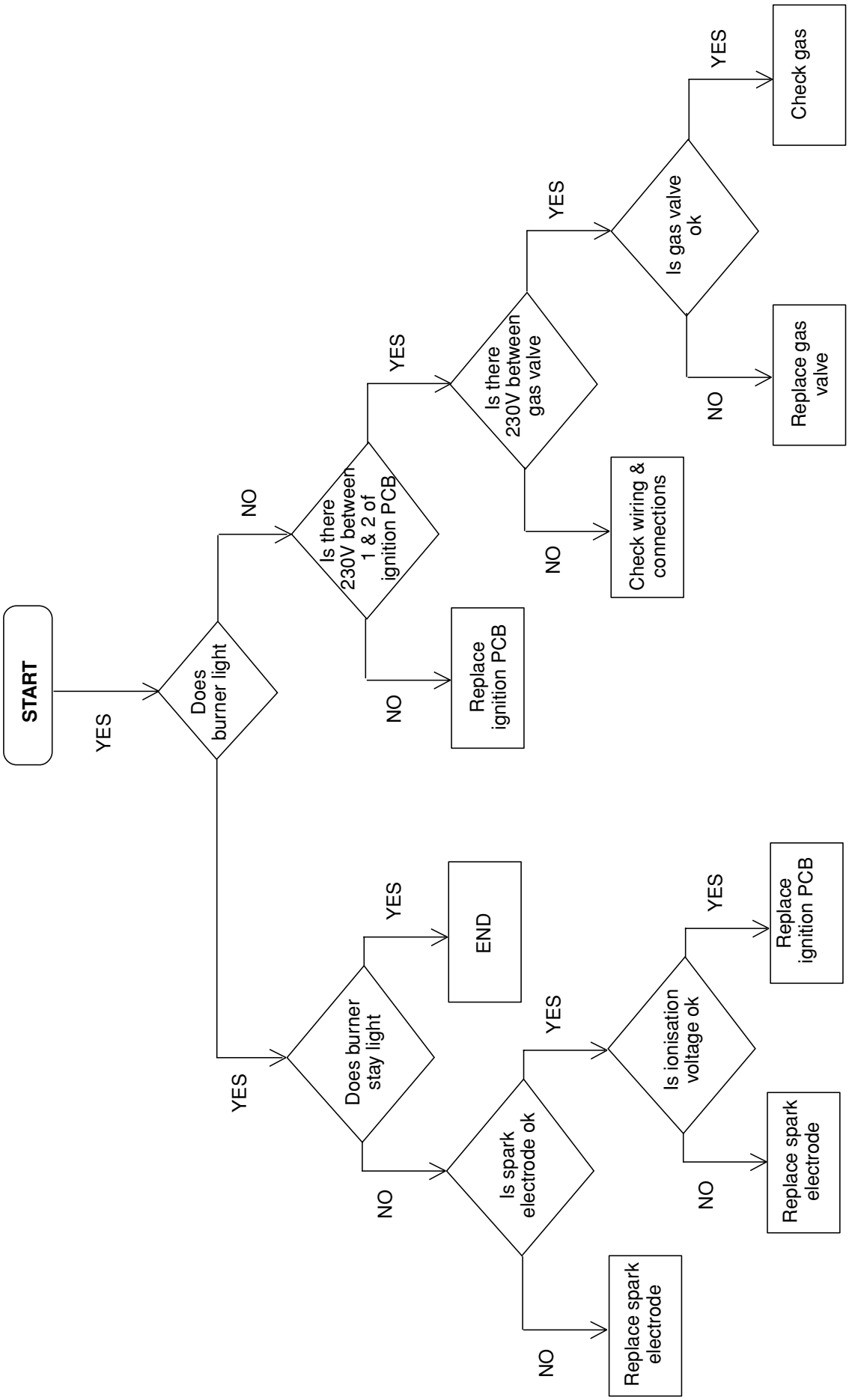

FAULT FINDING TEST 'E': turn the selector to the "on" position

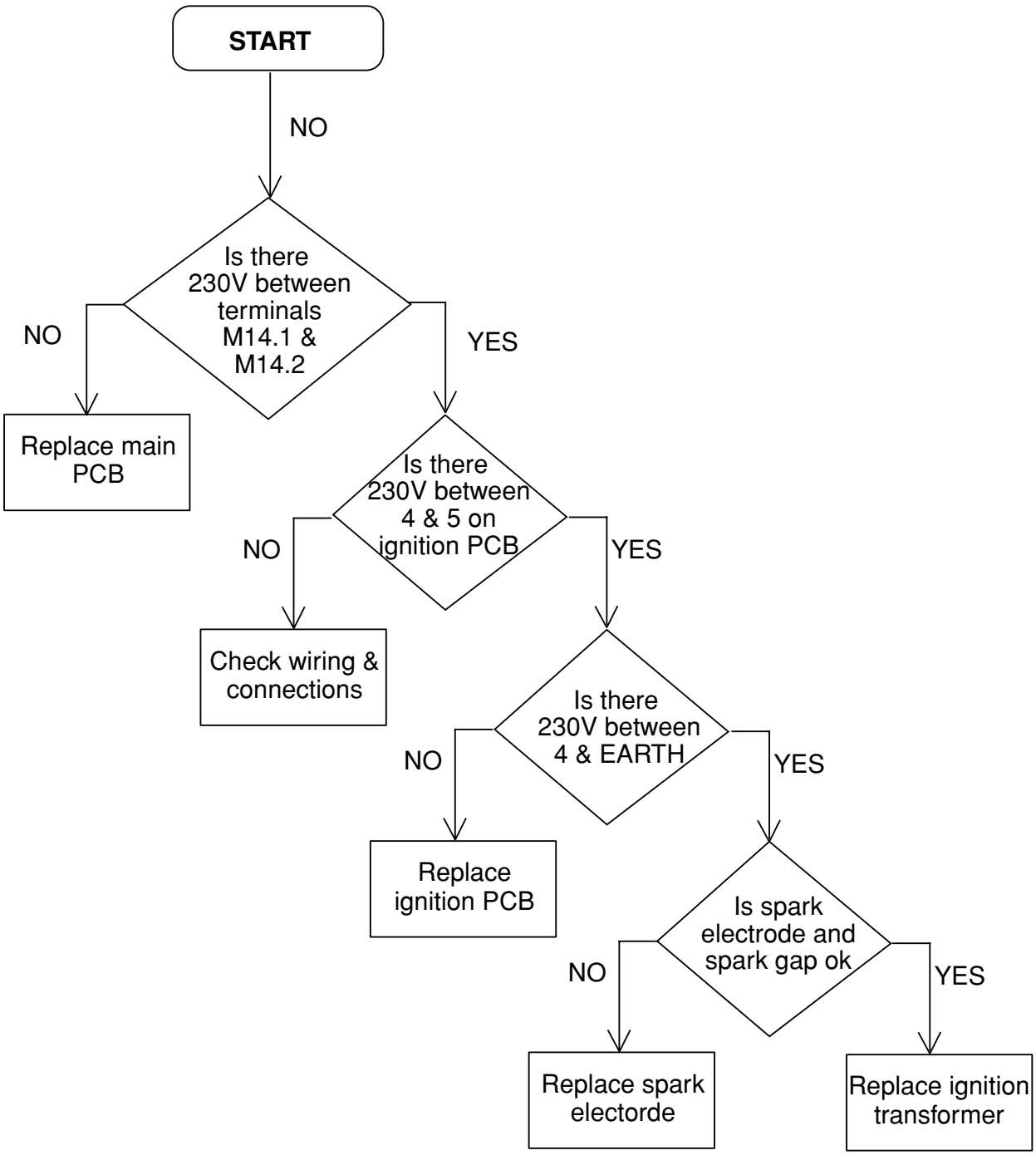

8.1 EXTERNAL WIRING

The appliance comes with a factory fitted link to allow basic operation of the boiler via the mode selector switch. If external controls are to be added to the system, they must be connected to the appliance as shown in the following diagrams. For advice on controls that are not featured in this book, please contact Vokera technical on 0870 333 0520.

8.2 INSTALLATION OF VOKERA TWIN CHANNEL PROGRAMMER (see fig. 39)

- Isolate the appliance from the electrical supply and remove the casing as described in 4.7.1
- Remove the blanking plate from the clock aperture
- Remove the appliance PCB cover
- Remove the factory fitted link between terminals 3 & 4 on the appliance terminal strip
- Take the wires supplied with the programmer and connect them as shown in fig. 39
- Mount the programmer to the clock aperture plate ensuring it's secured in place
- Connect any external controls as detailed in 8.6 or 8.7
- Replace the PCB cover and casing once the programmer installation has been completed.

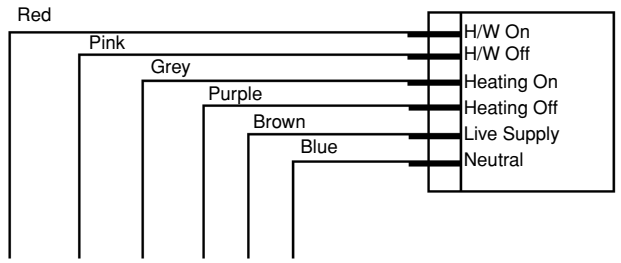

Fig. 39

8.3 TYPICAL CONTROL APPLICATIONS

The appliance can be used with the following controls:

- Vokera mechanical clock (part no. 201)
- Vokera digital clock (part no. 202).
- Vokera room thermostat (part no. 011)
- Vokera twin-channel programmers
- Twin-channel programmers
- Single-channel time clocks
- Programmable room thermostats.

In addition, the appliance can be used in conjunction with a typical 'S'-Plan or 'Y'-Plan system.

8.4 VOKERA TIME CLOCK (see fig. 40)

- Isolate the appliance from the electrical supply and remove the casing as described in 4.7.1.
- Remove the blanking plate from the clock aperture
- Remove the appliance PCB cover
- Remove the factory fitted terminal strip and harness from the main PCB
- Take the wires supplied with the time clock and connect them as shown in fig. 40
- If no room thermostat is to be fitted, ensure a link is fitted between TA & =
- Mount the time clock to the aperture plate ensuring it's secured in place
- Replace the PCB cover and casing once the installation has been completed.

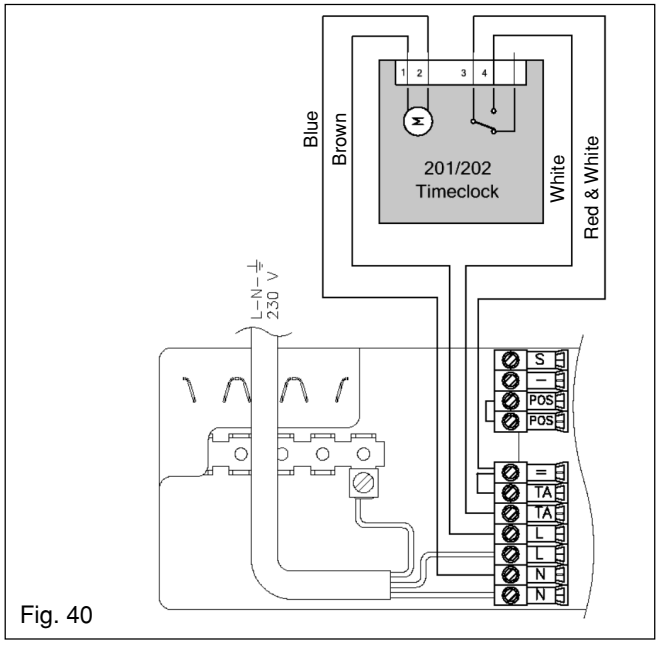

Fig. 40

8.5 VOKERA ROOM THERMOSTAT (see fig. 41)

Connect the Vokera room thermostat to the appliance as detailed in fig. 41.

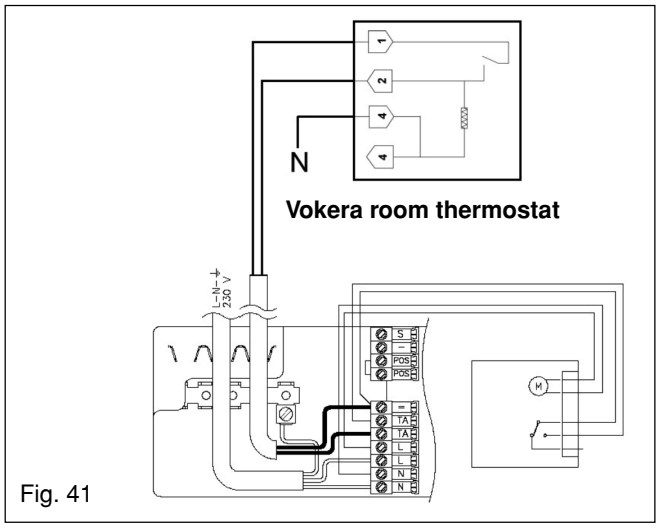

Fig. 41

8.6 "S" PLAN WIRING

See fig. 42.

8.7 "Y" PLAN WIRING

See fig. 43.

8.8 OTHER CONTROLS

Contact the controls manufacturer and/or Vokera technical department should you require more specific information on the suitability of a particular control.

Further guidance on the recommended practice for the installation of external controls, can be found in CHeSS - HC1/HC2 (www.energy-efficiency.gov.uk).

"S" plan system: external programmer or integral Vokera programmer

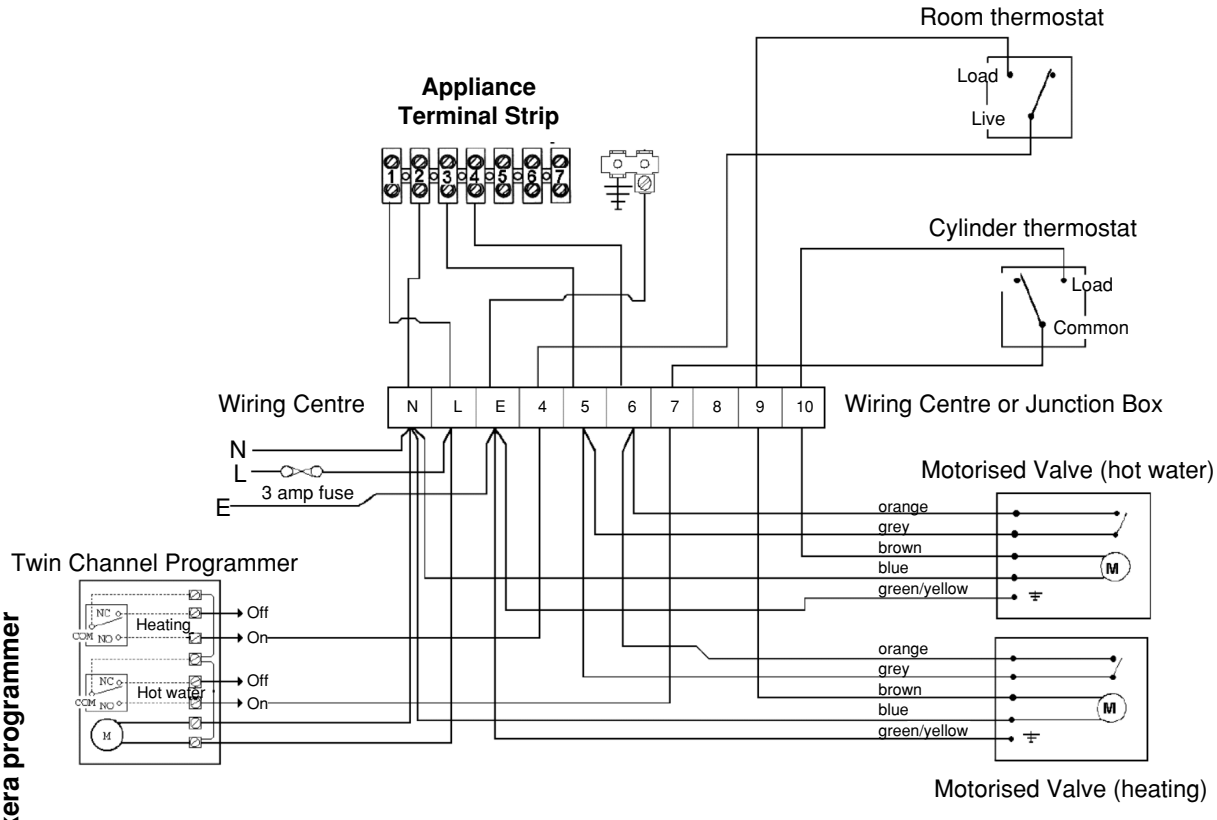

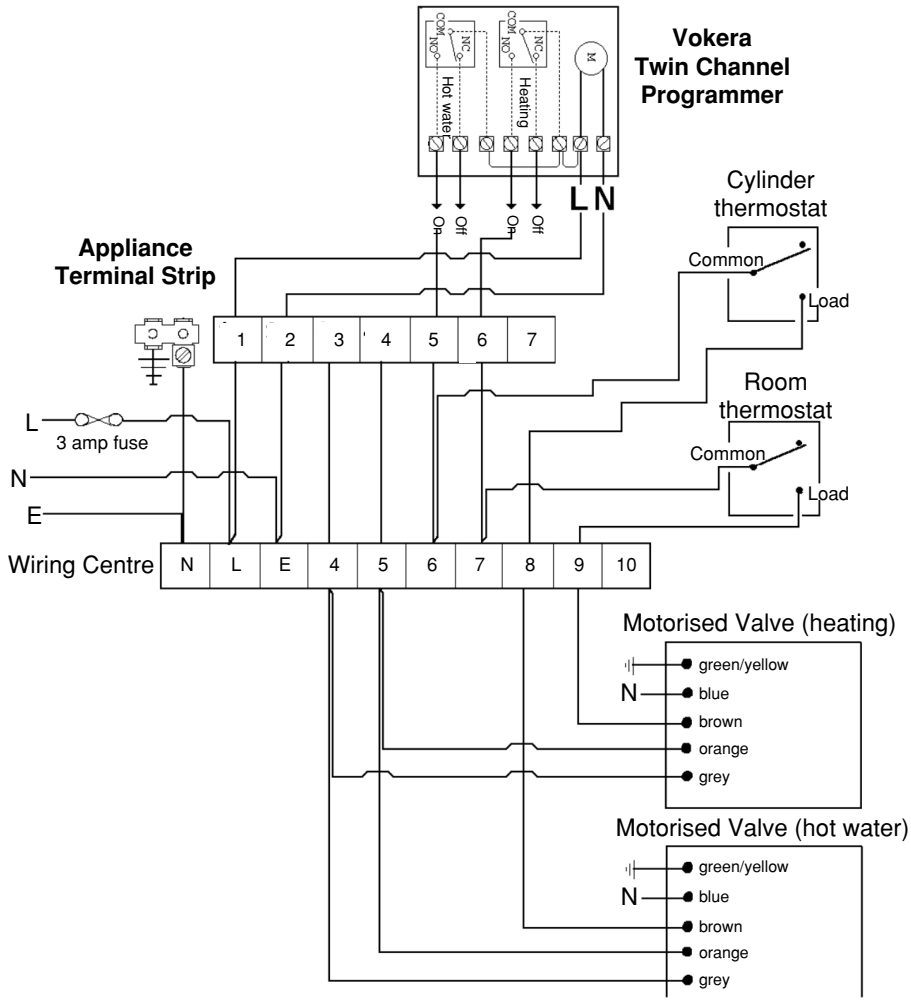

Fig. 42

"Y" plan system: external programmer or integral Vokera programmer

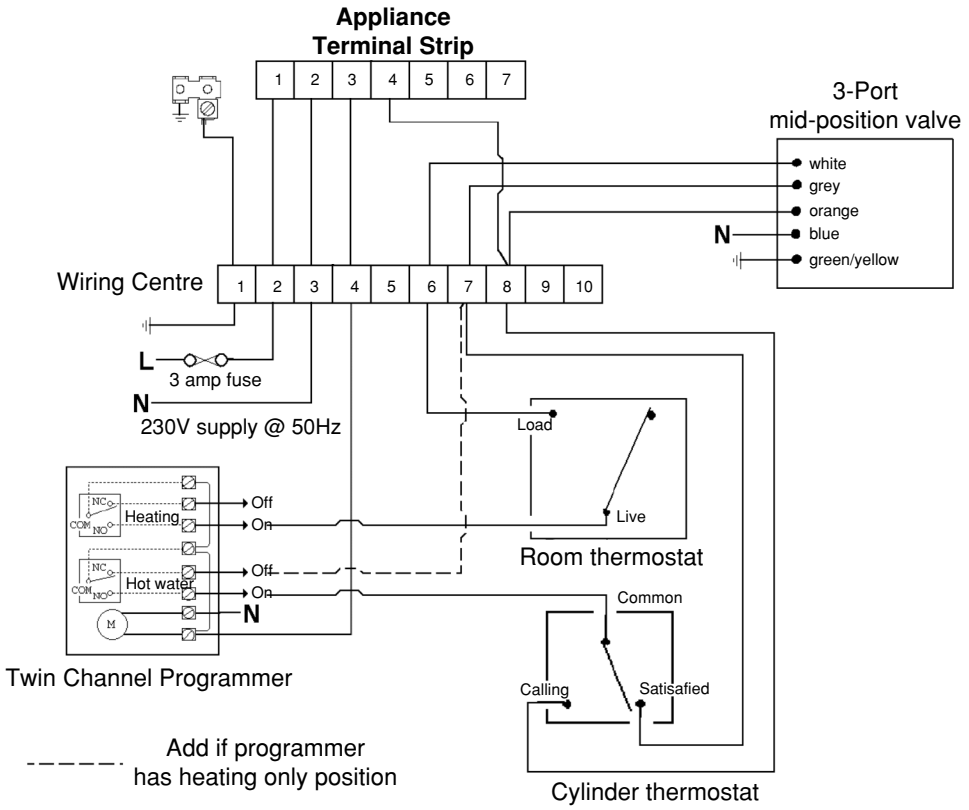

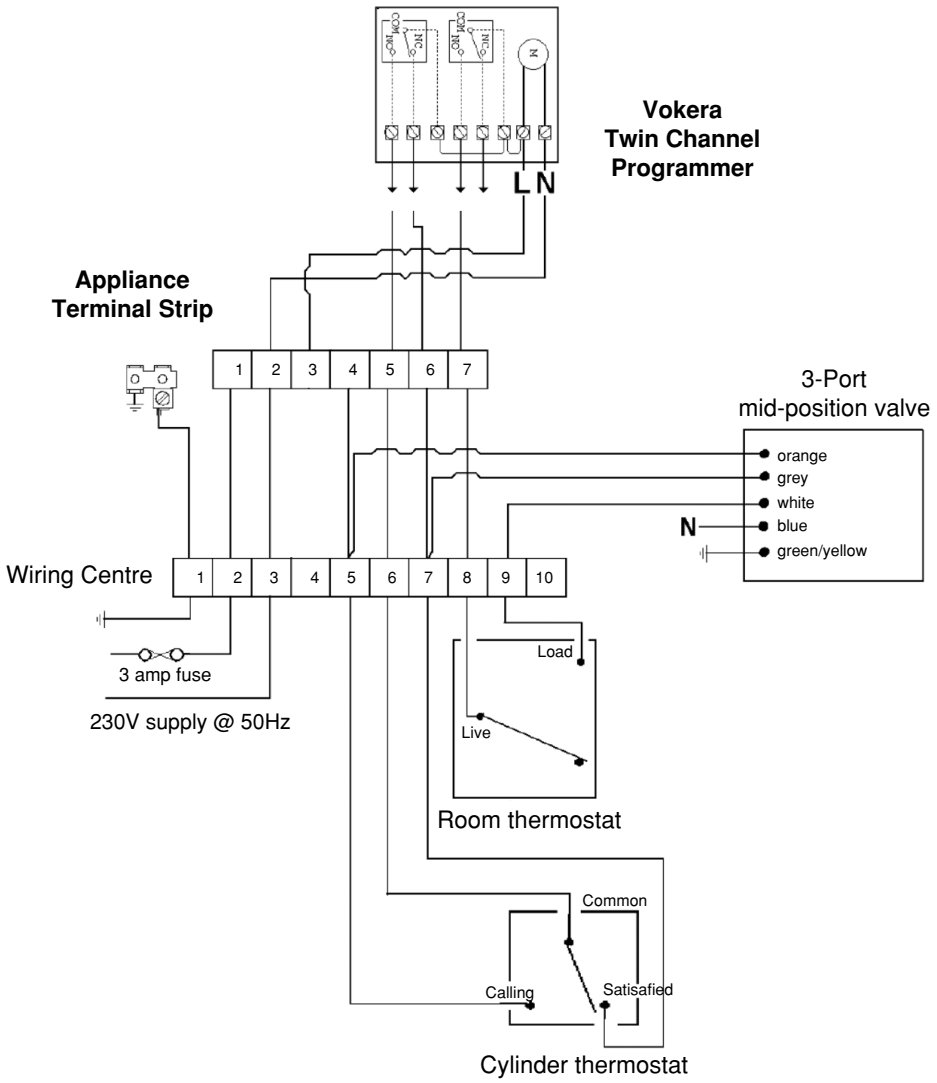

Fig. 43

NOTE: L-N-E CONNECTION IS ADVISABLE

CONTROL SWITCHING OF TIME CLOCK AND ROOM THERMOSTAT IS 230 V.a.c.

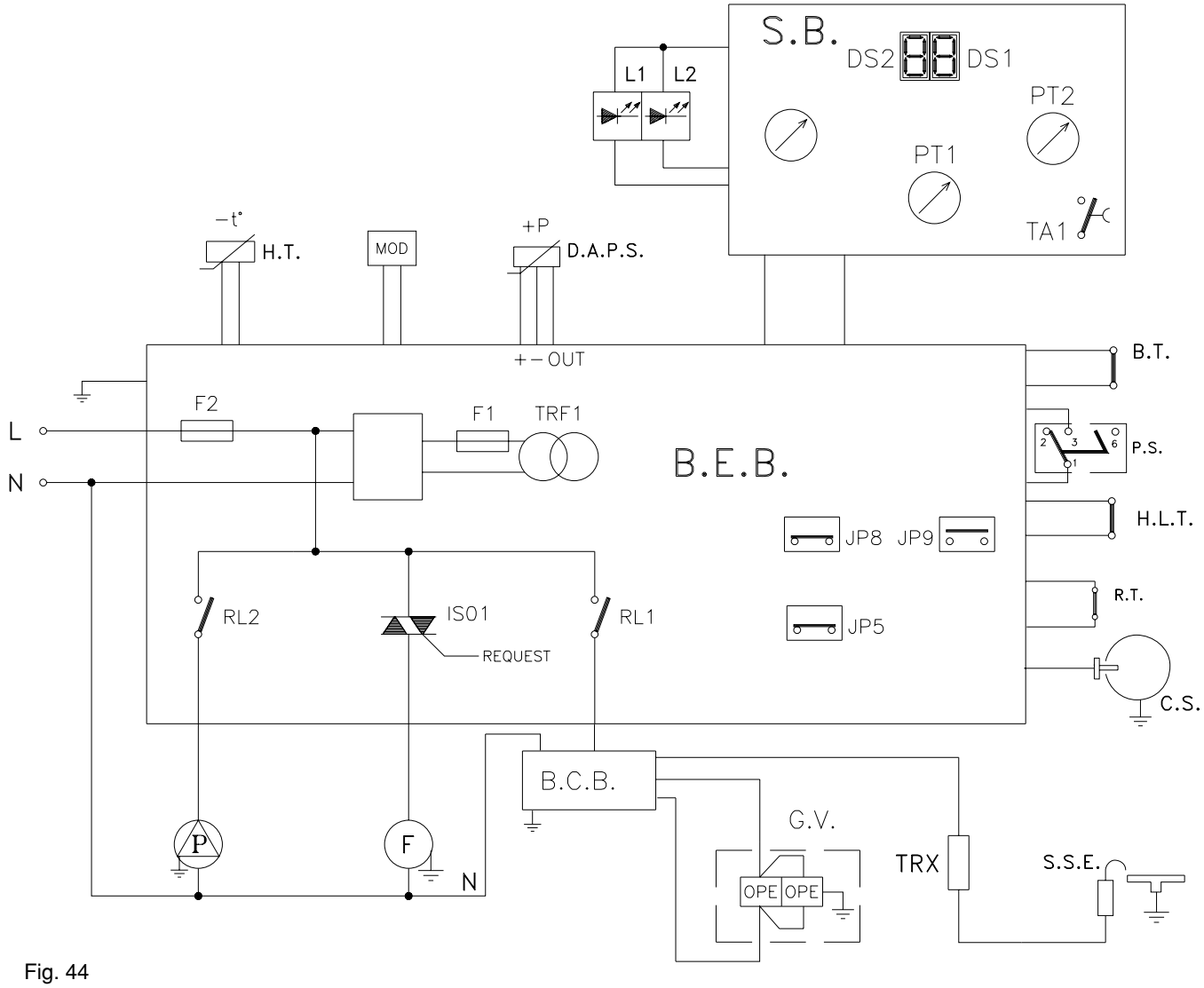

Fig. 44

B.C.B. (ACF02X)	Burner control board
R.T.	Room thermostat
P.S.	Water pressure switch
D.A.P.S.	Differential analogue pressure switch
H.L.T.	Hight limit thermostat
H.T.	Heat thermistor
MOD	Modulator
S.S.E.	Spark/Sense electrode
OPE	Gas valve solenoids
B.E.B.	Boiler control board
S.B.	Secondary board
JP8.	Natural gas selector
JP9	Timer on- off selector
JP5	Jumper C.H. only
PT2	Central heating temperature control
PT1(S.B.)	Selection of 0-reset / winter - summer
F	Fan
P	Pump
DS1-DS2	Temperature / allarm display
TA1	Combustion test
F1	Fuse 100 mA F (on 24V circuit)
F2	Fuse 2 A F (on 230 V circuit)
RL1	Ignition relay
RL2	Pump relay
ISO1	Fan triac
L1	Led OK (green)
L2	Led alarm (blink red)
TRF1	Transformer
G.V.	Gas valve
C.S.	Condensate sensor

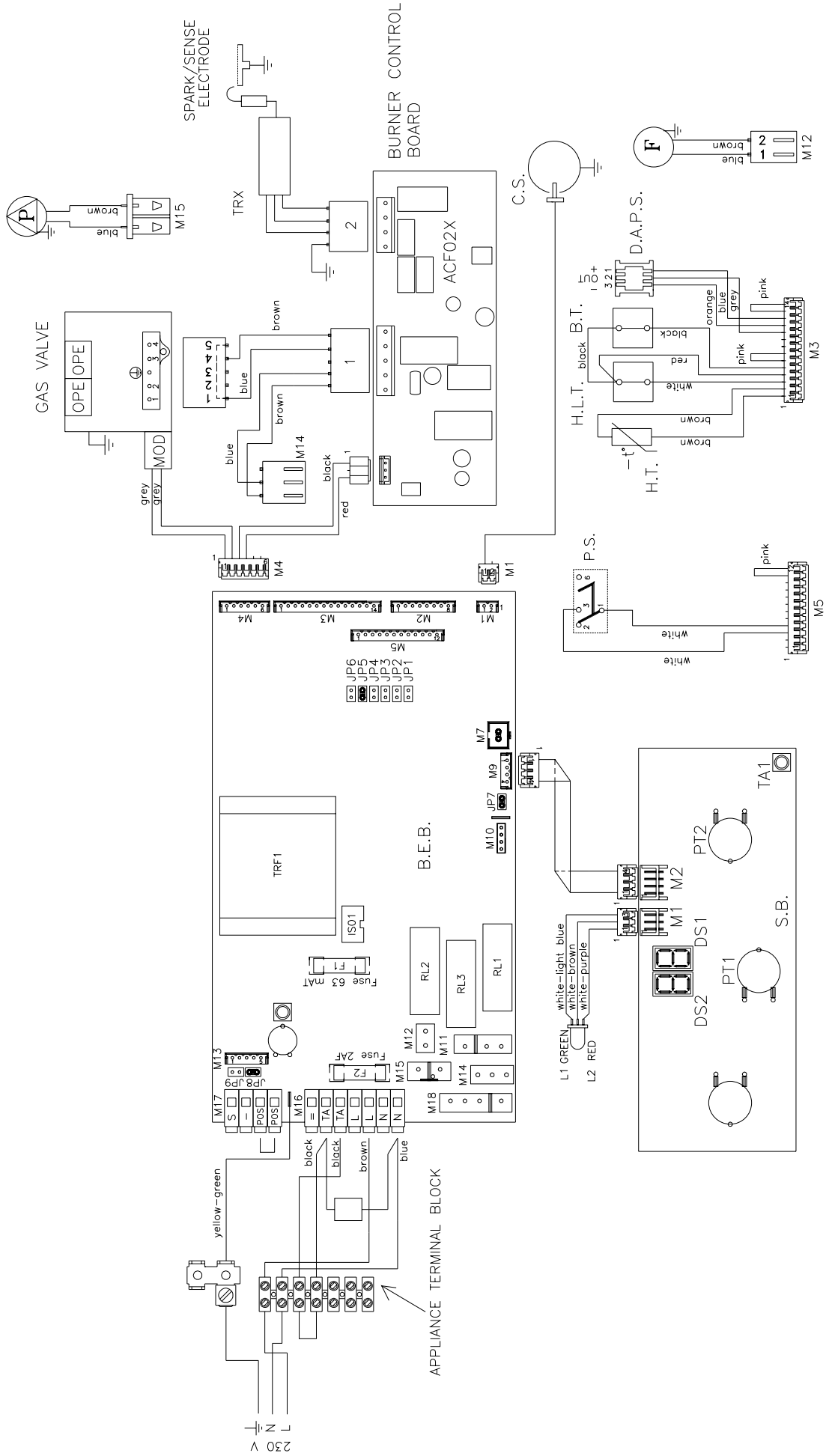
SPARK/SENSE ELECTRODE
BURNER CONTROL BOARD
ACF02X
TRX
C.S.
D.A.P.S.
M12
M15
GAS VALVE
OPE
MOD
M14
M4
M1
M3
H.L.T.
B.T.
H.T.
P.S.
M5
B.E.B.
TRF1
ISO1
Fuse 63 mAT
Fuse 2AF
RL1
RL2
RL3
S.B.
PT1
PT2
DS1
DS2
TA1
M2
L1 GREEN
L2 RED
APPLIANCE TERMINAL BLOCK
230 V

Fig. 45

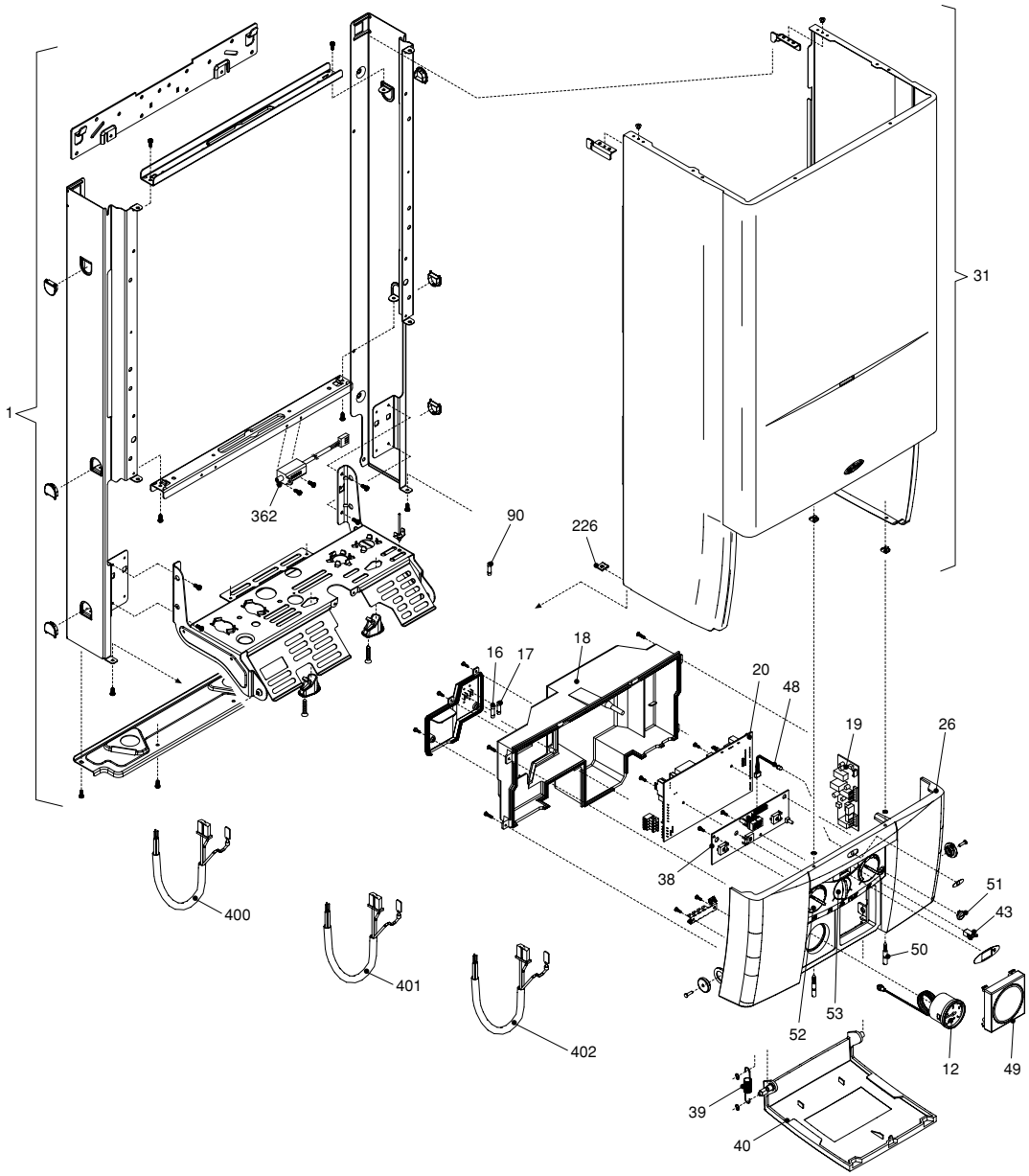

POS.	DESCRIPTION	
1	Frame	R01005342
12	Quick primer pressure gauge	R1857
16	2A fuse	R8968
17	100 mA fuse	R1947
18	Cover	R10021849
19	Ignition module	R10021848
20	Printed Circuit Board	R10025911
26	Instrumental panel	R10021951
31	Case	R1880
38	Printed Circuit Board	R10024558
39	Spring	R1862
40	Door panel	R10024508
43	Push-push cover	R1864
48	Led Light Guide	R1858
49	Hole cap	R8654
50	Pin	R1867
51	Hole cover	R1861
52	Selector knob kit	R01005073
53	Control knob kit	R01005072
90	3A fuse	R3478
226	Edge clip	R5128
326	O ring	R1869
362	Transformer	R10022659
400	Flat cable	R10021117
401	Y-S plan cable	R10023066

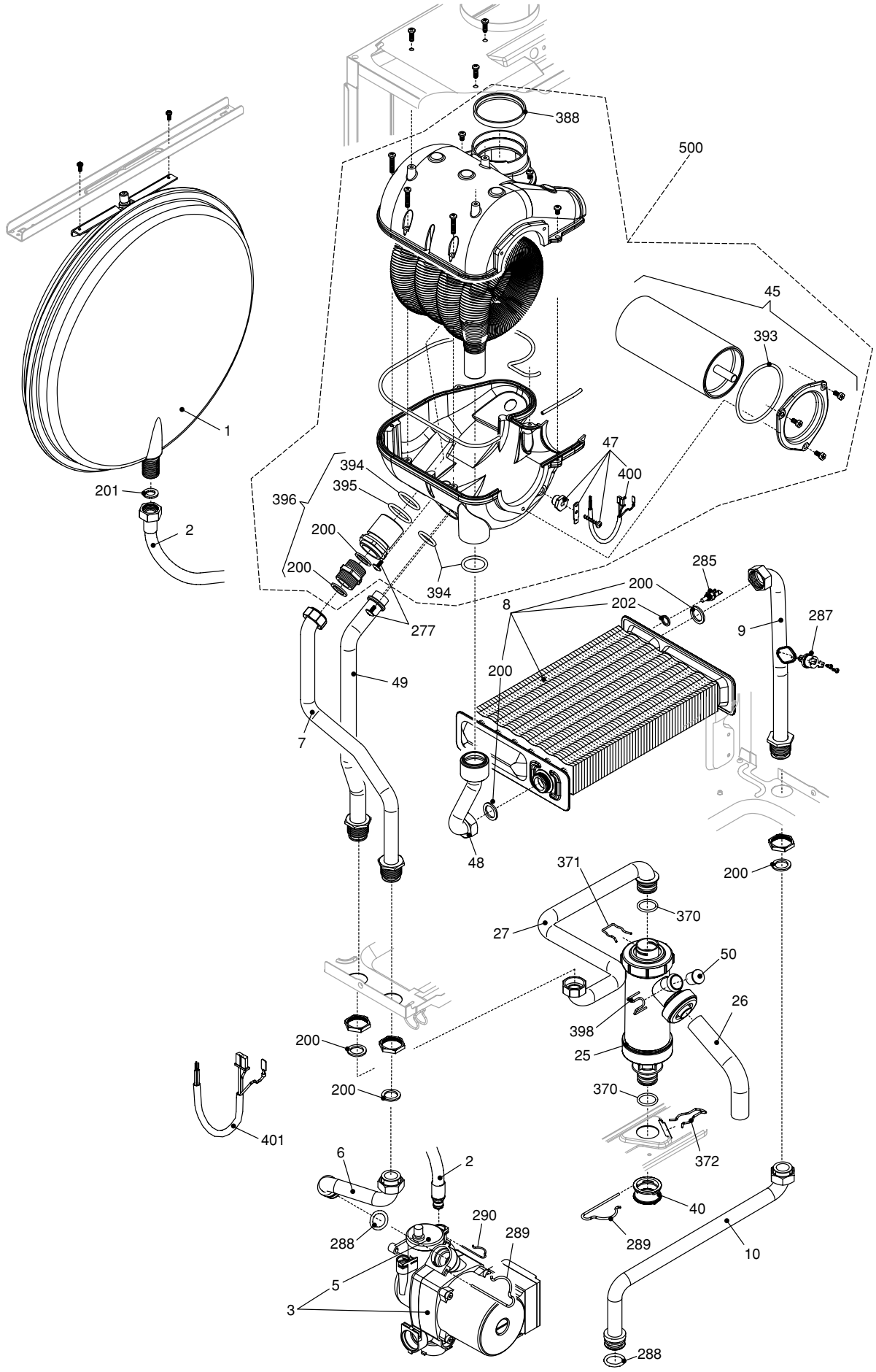
388
500
45
393
1
47
400
394
395
396
201
2
200
200
394
285
200
202
8
277
9
287
49
200
7
48
371
200
370
27
50
26
398
25
200
200
370
401
372
6
2
40
290
289
288
289
10
5
3
288

POS.	DESCRIPTION	
1	Expansion vessel	R2204
2	Flexible pipe	R10023603
3	Circulation pump	R2225
5	Automatic air vent bottle	R0439
6	Pipe	R10025961
7	Pipe	R10024312
8	Heat exchanger	R10024578
9	Pipe	R10021041
10	Pipe	R10025962
25	Siphon	R10023495
26	Siphon pipe	R10023530
27	Pipe	R10024440
40	Siphon plug	R10023531
45	Retarder	R10024136
47	Condensing level detector	R10025212
48	Pipe	R10024311
49	Pipe	R10024313
50	Siphon plug	R10024133
200	Washer 24 x 17	R5023
201	Washer 18,5 x 11	R5026
202	Washer	R5041
285	Sensor	R8484
287	Limit thermostat	R2258
288	O-Ring	R6898
289	Clip	R2223
290	Clip	R2165
370	O-Ring	R10023533
371	Clip	R10023532
372	Clip	R2588
388	Washer Ø 60	R10021949
393	O-Ring 4300	R10024141
394	O-Ring R20	R10024142
395	O-Ring OR R22	R10024143
396	Connection	R01005292
398	Clip	R10024336
400	Condensing level detector cable	R10024121
500	Condensing unit assembly	R01005291

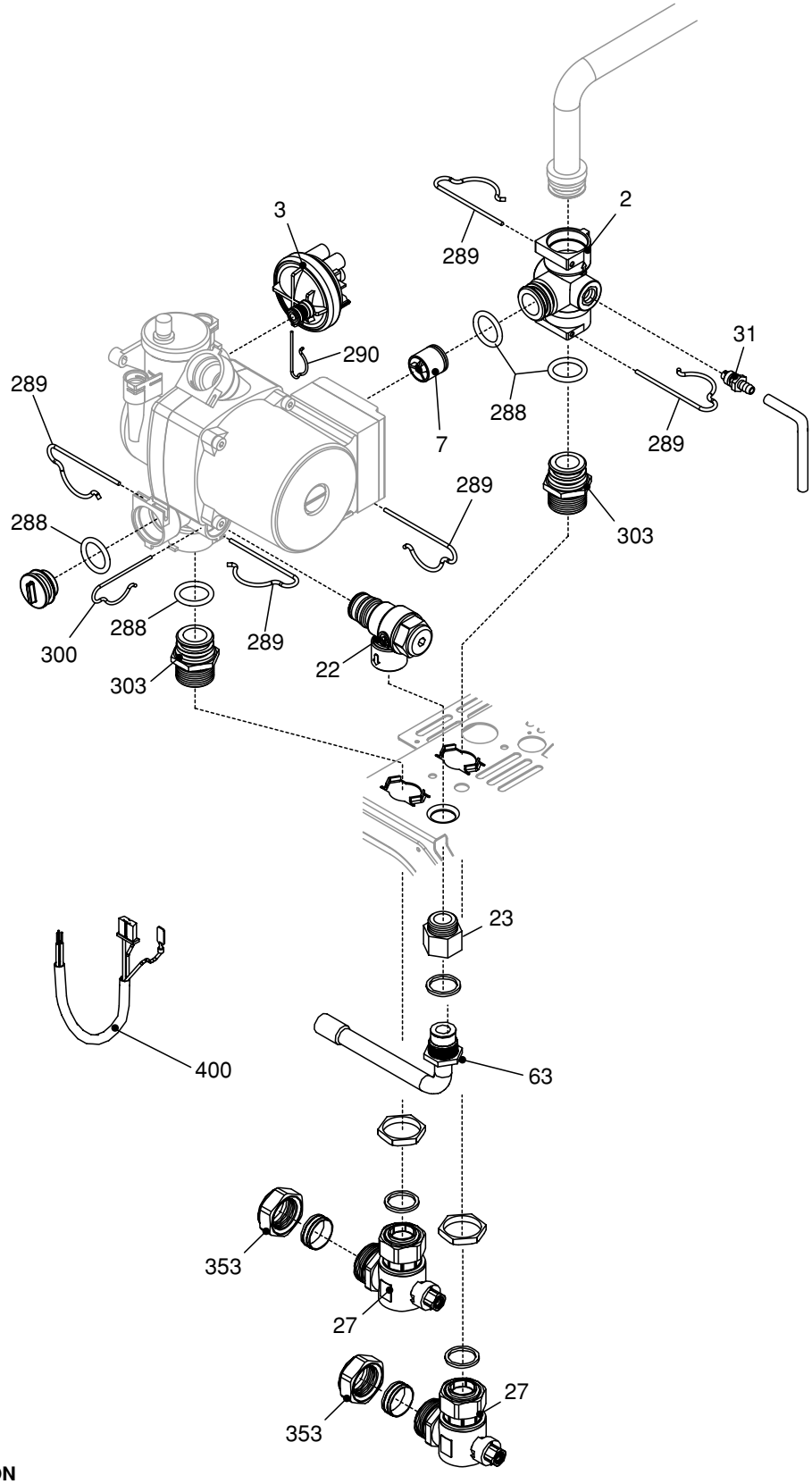

POS.	DESCRIPTION	
2	Connection	R10022658
3	Pressure switch	R2044
7	By-pass valve	R2047
22	Safety valve	R2907
23	Connection	R10022499
27	Heating clock	R1789
31	Venting plugs kit	R01005137
63	Pipe	R10023065
288	O-Ring	R6898
289	Clip	R2223
290	Clip	R2165
300	Clip	R2222
303	Connection	R2217
353	Nut	R1824
400	Hydraulic control cable	R10024740

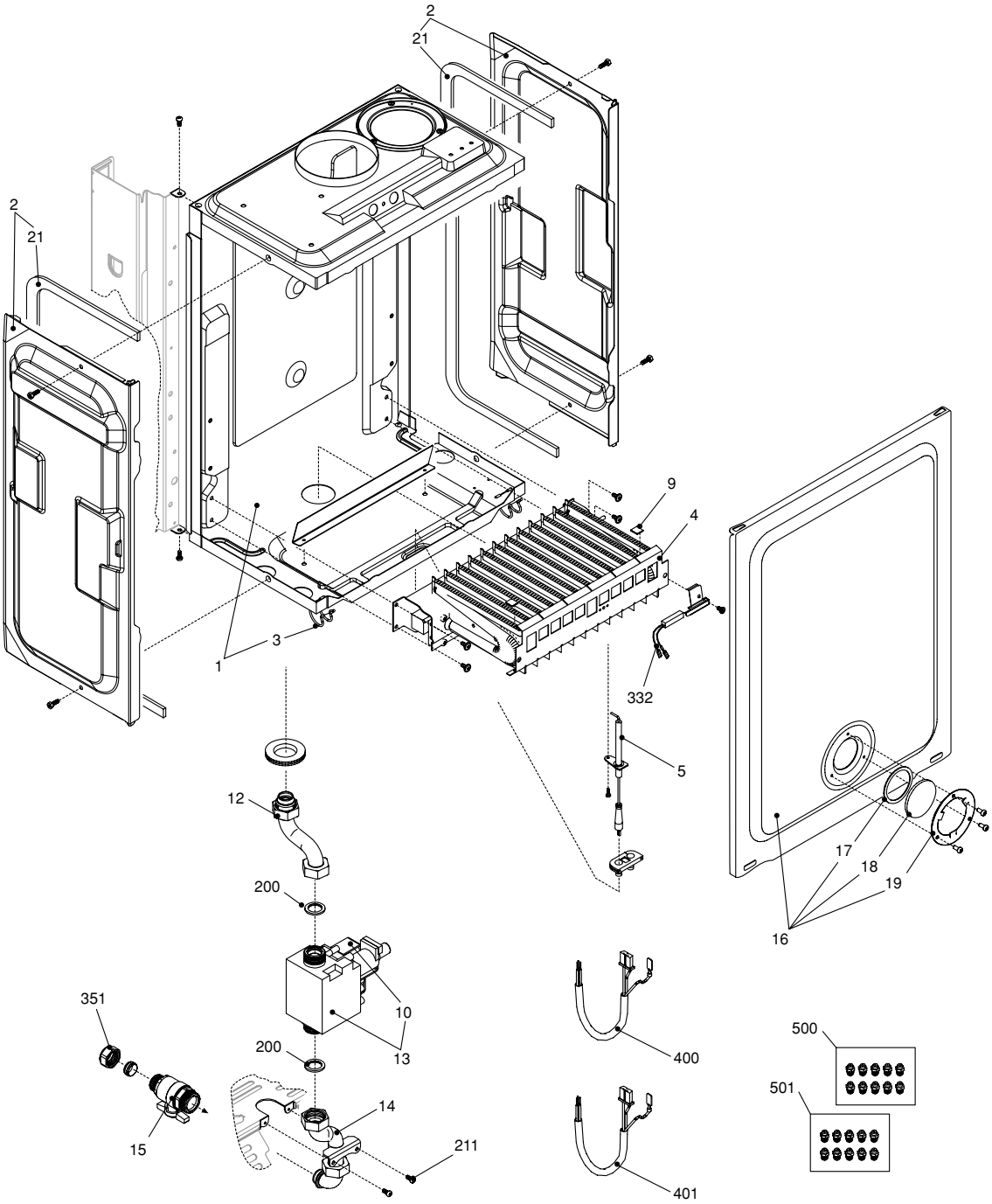

POS.	DESCRIPTION	
1	Air box bottom	R10024449
2	Ambidx air box side	R10024166
3	Air box clip	R0442
4	NG Burner	R10023168
5	Spark electrode	R10025891
9	NG plate	R5172
10	Gas valve solenoid	R10020838
12	Gas pipe	R1839
13	Gas valve	R10025074
14	Gas pipe	R1840
15	Gas cock	R1787
16	Air box cover	R10020216
17	Washer	R5072
18	Glass	R3139
19	Glass flange	R4007
21	Washer	R5905
200	Washer	R5023
332	Thermostat	R2600
351	Nut	R1823
400	Gas valve cable	R10021947
401	Gas valve coil cable	R10022112

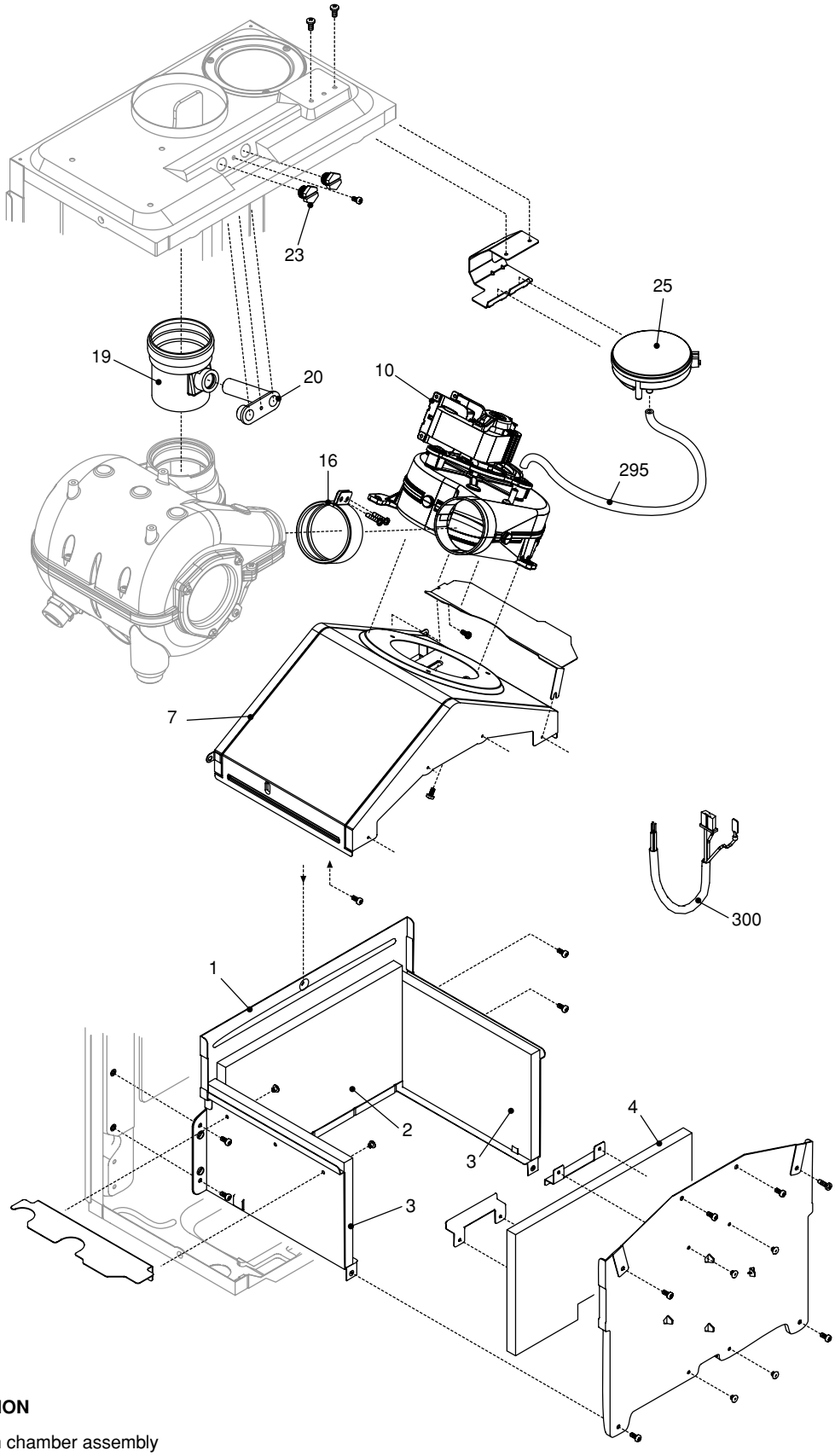

POS.	DESCRIPTION	
1	Combustion chamber assembly	R10025935
2	Combustion chamber back panel	R5270
3	Combustion chamber lateral panel	R5271
4	Combustion chamber front panel	R5269
7	Hood assembly	R10025934
10	Fan	R10025938
16	Clamp for tube	R10024126
19	Fan flue connection	R10024137
20	Block with combustion analysis check	R8085
23	Brass cap	R8086
25	Pressure differential switch	R2677
295	Silicone tube	R1457
300	Combustion-fan cable	R10025941

Cod. 10025964 - 18/04 - Ed. 1

energizing home heating

Vokèra Ltd.
4th Floor, Catherine House, Boundary Way, Hemel Hempstead, Herts, HP2 7RP

Email: enquiries@vokera.co.uk Web: www.vokera.co.uk
Sales, Technical Advice, General Enquiries - Tel: 0870 333 0520 Fax: 01442 281403
After Sales Service - Tel: 0870 333 0220

Vokèra Ireland
West Court, Callan, Co Kilkenny
Tel: 05677 55057 Fax: 05677 55060

Vokèra Ltd. reserve the right to change the specifications without prior notice. Consumers' statutory rights are not affected.

A Riello Group Company

"Vokèra"
supports Benchmark