spares & parts online
IBASIS.co.uk©

Vokèra
heating for life

CondexaPRO

Light commercial system boiler

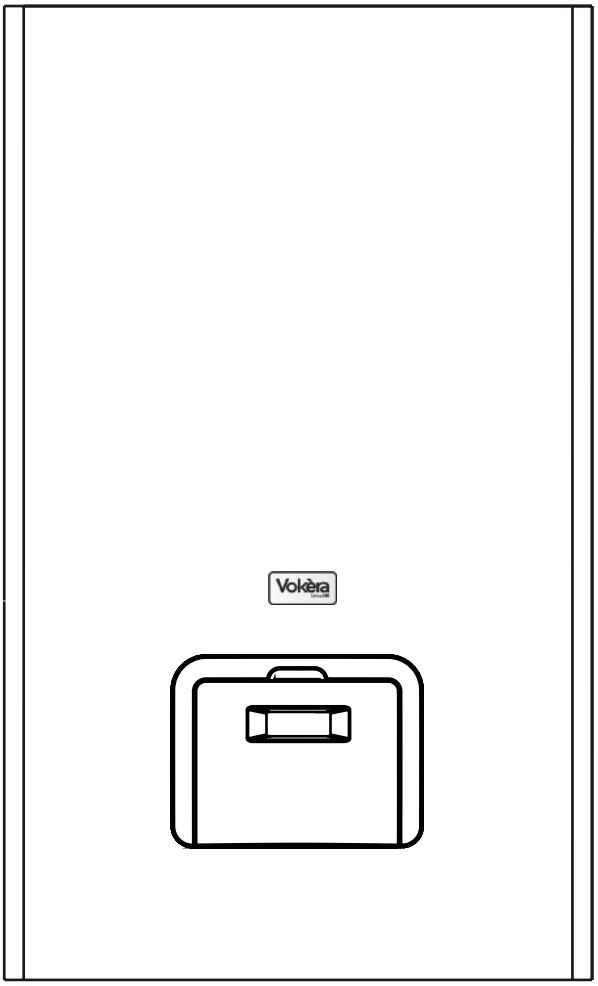

Installation
& Servicing
Instructions

CE

THESE INSTRUCTIONS
TO BE RETAINED
BY USER

benchmark
COLLECTIVE MARK
THE MARK OF QUALITY FOR THE INSTALLATION, COMMISSIONING AND SERVICING OF DOMESTIC HEATING AND HOT WATER SYSTEMS

Vokèra is a licensed member of the Benchmark scheme which aims to improve the standards of installation and commissioning of domestic hot water systems in the UK.

CONFORMITY

The **Vokera CondexaPRO** *boilers comply with:*

- *Gas Appliances Directive 2009/142/EEC*
- *Boiler Efficiency Directive 92/42/EEC*
- *Electromagnetic Compatibility Directive 2004/108/EEC*
- *Low Voltage Directive 2006/95/EEC.*
- *EN 677 standard on condensing boilers.*

CE 0085

RANGE

MODEL	FUEL	CODE
CondexaPRO 50 M	Natural gas - LPG	20019678
CondexaPRO 100 M	Natural gas - LPG	20019311
CondexaPRO 100 S	Natural gas - LPG	20019677

Dear Customer,

congratulations on your purchase of a **Vokera CondexaPRO** *Boiler. You have chosen proven technology based on* **Vokera Ltd** *experience in this field and if fully compliant with current European standards. This appliance ensures maximum comfort for an extended period, with high reliability, efficiency, quality and safety.*
The purpose of this manual is to provide all the information that we feel is necessary for the correct and simple installation of the boiler and must be preserved and made available as and when requested to ensure correct installation, operation and maintenance.
Full warranty cover applies providing the boiler has been correctly installed, operated and commissioned by qualified personnel. The manufacturer is not liable for any damage caused by the incorrect layout or installation of the flue system.

Vokera Ltd

WARRANTY

The **Vokera CondexaPRO** Boiler comes with a SPECIFIC WARRANTY of 24 months (parts and labour) starting from the date of commissioning or 3 months from date of purchase which ever sooner providing it has been commissioned by **Vokera** or a qualified engineer and a copy of the commissioning certificate has been returned and filled with **Vokera Ltd**.
As a result, we suggest that you contact **Vokera Service Department** or a qualified engineer for commissioning of the boiler, as described in the conditions listed on the WARRANTY CERTIFICATE supplied with the boiler, which should be read with care.

CONTENTS

GENERAL

General warnings	page	5
Fundamental safety rules	“	5
Description of the appliance	“	6
Safety devices	“	6
Identification	“	7
Structure	“	8
Technical specifications	“	9
Accessories	“	9
Water circuit	“	10
Positioning the probes	“	11
Pumps	“	12
Wiring diagrams	“	14
Control panels	“	18
User interface	“	19
- Display mode	“	20
- Readout mode	“	20
- Setting the user parameters	“	21
- Monitor mode	“	22
- Installer programming mode	“	23
- Test mode	“	24
- Error mode	“	24
- Permanent lockout	“	24

INSTALLER

Receiving the product	pag.	25
Dimensions and weight	“	25
Handling	“	26
Room where the boiler is installed	“	26
Installation in old systems or systems to be upgraded	“	27
Installing the boiler	“	28
Water connections	“	28
Fuel connections	“	30
Flue gas outlet and combustion air intake	“	30
Electrical connections	“	33
Installing the outside probe	“	35
Filling and emptying the systems	“	36
Preparing for first start-up	“	38

TECHNICAL

Starting for the first time	pag.	39
Checks during and after first start-up	“	41
Setting the functional parameters	“	45
Setting the central heating parameters	“	45
Setting the domestic hot water parameters	“	47
Setting the temperature controller	“	48
Setting the addresses for cascading configurations	“	54
Fault codes	“	56
List of parameters	“	58
Conversion from one type of gas to the other	“	60
Adjustments	“	62
Temporary shutdown	“	63
Shutting down for extended periods	“	63
Servicing	“	64
Cleaning the boiler and dismantling the inside components	“	64
Troubleshooting	“	69
Spare parts list	“	74

The following symbols are used in some parts of this booklet:

⚠ **CAUTION =** actions that require special care and suitable preparation

⛔ **PROHIBITED =** actions that absolutely must NOT be carried out

This booklet, code 068464EN - Rev. 15 (10/12), contains 80 pages.

GENERAL WARNINGS

⚠ After having removed the packaging, check that the material supplied is intact and complete; if this is not the case, contact **Vokera Ltd**.

⚠ The **CondexaPRO** Boiler must be installed by qualified personnel as detailed under any current standards and law applicable and with the instructions provided by **Vokera** in the manual supplied with the appliance.

⚠ The boiler must be used for the purposes it has been expressly manufactured. **Vokera Ltd** declines all contractual and extra-contractual liability for damage caused to persons, animals or things, due to errors in installation, control, servicing or improper use.

⚠ In the event of water leaks, disconnect the boiler from the mains power supply, close the water supply and promptly notify **Vokera Ltd** or other professionally qualified personnel.

⚠ Periodically check that the condensate drain is free of blockages.

⚠ Periodically check that the operating pressure of the water circuit when cold is **1.5 bar** and less than the maximum limit specified for the appliance. If this is not the case, contact **Vokera Ltd** or other professionally qualified personnel.

⚠ If the boiler is not used for an extended period, the following minimum operations must be completed:
- move the main system switch to "off"
- close the fuel cock and the water cocks on the central heating system
- empty the central heating system if there is the risk of frost.

⚠ Servicing must be performed on the boiler at least once a year.

⚠ This manual is an integral part of the boiler and as a consequence must be kept with care. If the manual is damaged or lost, contact **Vokera Ltd** for another copy.

FUNDAMENTAL SAFETY RULES

The use of products that operate on fuel, electricity and water requires a number of fundamental safety rules to be observed, including:

⛔ The boiler must not be used by children or invalid persons without supervision.

⛔ Electrical devices or appliances, such as switches, household appliances, etc. must not be used if there is the smell of gas or unburned fuel. In this case:
- ventilate the room by opening doors and windows;
- close the fuel stopcock;
- promptly contact **Vokera Ltd**, your gas supplier or other professionally qualified personnel.

⛔ Do not touch the boiler when barefoot or with wet parts of the body.

⛔ No service or cleaning operations may be performed without first having disconnected the boiler from the mains power supply, moving the main system switch to "off".

⛔ The safety or control devices must not be adjusted without the authorisation and written instructions from the manufacturer of the boiler.

⛔ The condensate drain must not be plugged.

⛔ Do not pull, remove or twist the electrical cables coming out of the boiler, even if the appliance is disconnected from the mains power supply.

⛔ The ventilation openings in the room where the appliance is installed must not be plugged or reduced in size and must comply with any current standards and law applicable.

⛔ Do not expose the boiler to the elements. It is not designed to operate outdoors and does not have sufficient frost protection systems.

⛔ Do not switch the boiler off if the outside temperature may fall below ZERO (risk of freezing).

⛔ Do not leave containers and flammable substances in the room where the boiler is installed.

⛔ The packaging material must not be dispersed in the environment or left within the reach of children as it is a potential source of hazard. It must be disposed of according to the legislation in force.

DESCRIPTION OF THE APPLIANCE

The **CondexaPRO** Boiler is a wall-hung condensing boiler, for heating only, with a premix burner, made up of one or two heating units, depending on the model.
The **CondexaPRO** Boiler can be combined in a cascading configuration with other heat generators to create modular heating plants made up of boilers connected to the same water circuit and with electronic controllers communicating via bus. The heat output of each heating unit reaches 48.50 kW (100%, 50°C-30°C) and can be modulated from 30% to 100%. The efficiency reaches 108.7% and the low flue gas outlet temperature allows the use of a flame-retardant polypropylene flue (class B1), with a diameter of just 50 mm and a total equivalent height of 30 metres.
The versatility of the electronic board makes quick connection possible to all types of central heating and domestic hot water production systems with storage, managing three circuits operating with three different temperatures at the same time.
The individual heating units in cascading configuration can be activated, as well as by simple rotation, in such a way that when a certain percentage of output is reached by the first unit, the other units start automatically, all with the same load factor.
Specific accessories are available for the boiler, such as two-way valves or pumps, or devices for taking in the combustion air.
These ensure adaptability to a vast range of system configurations. Other accessories include water headers and the flue gas header for cascading installations.

The main features of the **CondexaPRO** Boiler are:
- premix jet burner with constant air-gas ratio
- output from 16.3 to 100 kW (models 100 M and 100 S)
- heat output up to 450 kW, by connecting up to 9 heating units in a cascading configuration, using the waterconnection kit, available separately
- maximum flue gas outlet temperature 80°C
- total flue gas outlet and combustion air intake length up to 30 m, Ø 50 mm
- quick connection of the water and gas headers (optional), with outlet on the right or left
- microprocessor control with self-diagnosis, shown on LEDs and the display
- the electronic controller can manage up to 60 heating units in cascading
- frost protection function activated according to the outside temperature and/or the temperature of the boiler
- fitted for room thermostat in the high and low temperature zones
- outside probe to enable the climate control function
- post-circulation function for the central heating and DHW circuits
- priority settable on the DHW, high or low temperature circuit
- possibility to manage two circuits with fixed set point or with climate control using two separate curves
- automatic reversal of the burner ignition order
- emergency function, which in the event of faults on the Master board still allows the Slave boards to be controlled.

SAFETY DEVICES

The **CondexaPRO** Boiler is fitted with the following safety devices, installed on each heating unit:

Safety thermostat with automatic reset, activated if the outlet temperature exceeds 90°C, shutting down the burner.
Diagnosis in the water circuit, the minimum flow-rate of the heat exchange fluid in each heating unit is controlled by a water differential pressure switch and an electronic safety system, using an outlet probe and a return probe. The appliance goes into safety mode if there is insufficient water or circulation.
Flue gas outlet safety device: the flue gas probe, located at the bottom of the exchanger, sets off an alarm in the event of high flue gas temperatures (> 80°C). In addition, the float in the drain trap prevents the flue gas from passing through the condensate drain.
Fan safety device: a Hall-effect sensor constantly monitors the rotation speed of the fan. The **CondexaPRO** Boilers are designed for cascading connection, which allows the creation of compact and very flexible heating plants, due to the high degree of modulation.

⚠ The activation of the safety devices indicates a potentially dangerous malfunction on the boiler; immediately contact **Vokera Ltd** or other professionally qualified personnel.

After a short wait, try restarting the boiler (see chapter on starting for the first time).

⛔ The boiler must never be started, even temporarily, with the safety devices not working or having been tampered with.

⚠ The safety devices must be replaced by the only using the original components supplied by the manufacturer. See the spare parts catalogue supplied with the boiler.

After having performed the repairs or replacements, check the correct operation of the boiler.

IDENTIFICATION

The boilers can be identified by the:

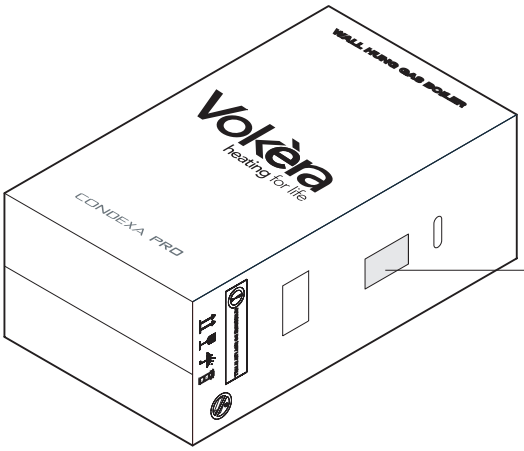

- Packaging label

This shows the code, the serial number and the barcode.

Code **XXXXXX**

Model
XXXXXXXXXXXXXX

Serial Number
XXXXXXXXX

- Rating plate

This shows the technical and performance specifications.

Models
50 M - 100 M

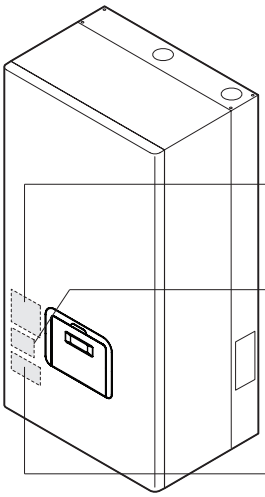

Vokèra heating for life — **CONDEXA PRO**

MORSON ROAD ENFIELD, MIDDLESEX EN3, 4NQ

Appliance category: B23, C63

SERIAL N°
N° 867345123456

Gas family: NAT GAS | Gas category: II 2H3+
Max. working temperature 90 °C | NOx class 3

Min. Heating Press. 1 m (0,1 bar) w.g. | Max. Working Press. 15 m (1,5 bar) w.g.

IE-GB 2H G20 - 20 mbar | EAN 50-37685-12867-0

230 V ~ 50 Hz 333 W | IP X0D

Maximum Heating Input	(80°C/60°C) On Net C.V.	90	kW
Maximum Heating Output	(80°C/60°C) On Net C.V.	88.3	kW
Maximum Heating Output	(50°C/30°C) On Net C.V.	96.8	kW

Max.CH working pressure = 2-3 bar

Safety valve setting = 6 bar

Capacity of thermal store = 10 l

Weight (full) =~ 100 kg

NO PARTS WILL BE EXCHANGED UNDER GUARANTEE WITHOUT THE BOILER SERIAL NUMBER

0085
AQ0713

SERIAL N°

GUARANTEE VOID
IF REMOVED

- Sticker for G20

⚠ **Boiler regulated for:**

G20 20 mbar

Destination country: GB - IE

Models
100 S

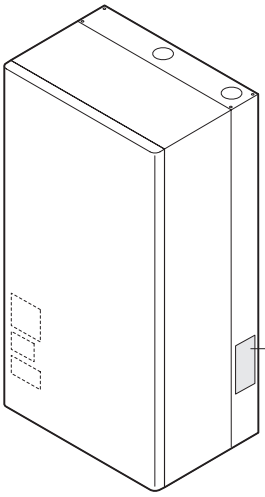

- Gas label

This is applied on the side of the frame, and describes the type of fuel used by the boiler, and the country of destination.

Country of destination:

GB IE CE

Type of appliance : **B23, C63**
Boiler category : **II2H3+**

Gas supply pressure:
G20 20 mbar
G30+G31 28-30/37 mbar

Manufacturer settings:
G20 - 20 mbar - 2H NATURAL GAS

WARNING

Carefully read the instruction manual before installing and starting the appliance.

(Laterale DX) 068465EN_:1_E0

⚠ If the plates or other means for clearly identifying the product have been tampered with, removed or are missing, the installation and servicing operations will be much more difficult.

CondexaPRO 50 M

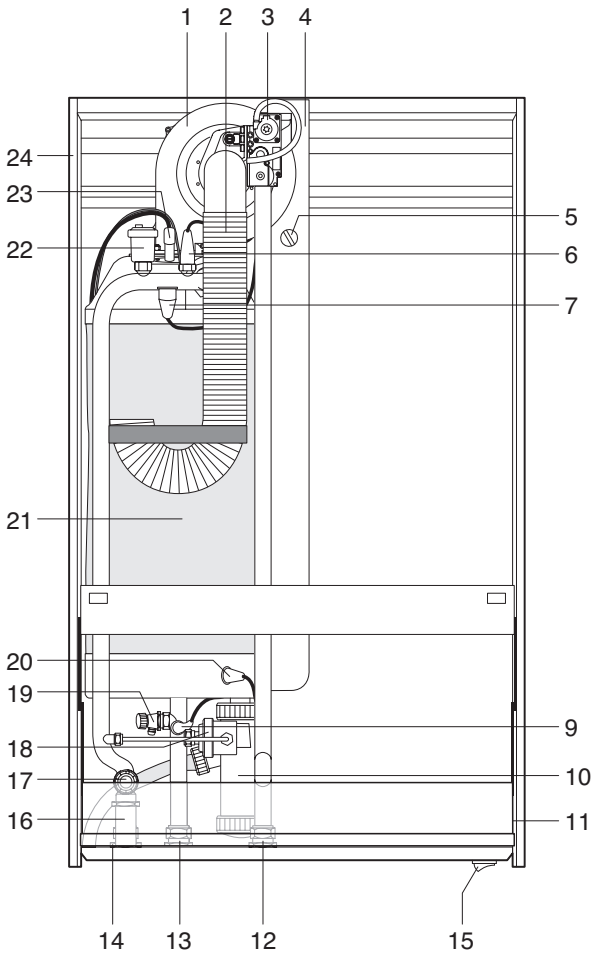

CondexaPRO 100 M - 100 S

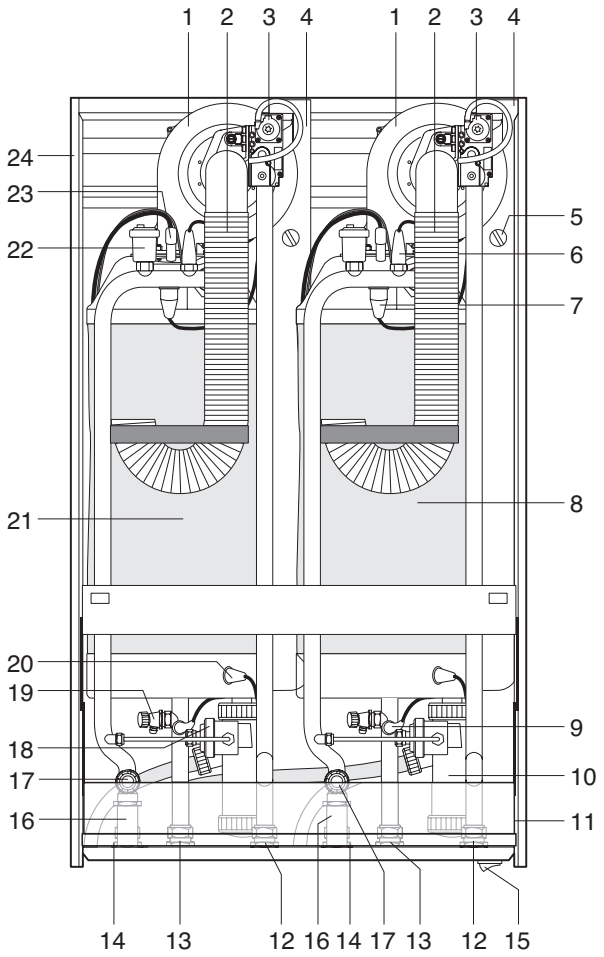

1 - Fan
2 - Combustion air intake fitting
3 - Gas valve
4 - Flue gas outlet fitting
5 - Flue gas analysis test point
6 - Outlet probe
7 - Safety thermostat
8 - SECOND combustion chamber (models 100 M and 100 S)
9 - Return probe
10 - Condensate collection drain trap
11 - Control panel (90° rotation)
12 - Gas supply
13 - Central heating return inlet
14 - Central heating flow outlet
15 - Main switch
16 - Safety valve connection pipe
17 - Safety valve 6 bar
18 - Water differential and minimum pressure switch (0,5 bar)
19 - Drain cock
20 - Flue gas probe
21 - FIRST combustion chamber
22 - Automatic vent valve
23 - Ignition / detection electrode
24 - Panelling

TECHNICAL SPECIFICATIONS

DESCRIPTION		CondexaPRO 50 M	CondexaPRO 100 M	CondexaPRO 100 S	
Fuel		G20 - G30 - G31			
Appliance category		II2H3+			
Type of appliance		B23 - B53 - C13x - C33x - C43x - C53x - C63 - C63x - C83			
Heat input ref. HHV (min - max)	**G20**	16,3 - 50	16,3 - 100	16,3 - 100	kW
Heat input ref. NHV (min - max)	**G20**	15 - 45	15 - 90	15 - 90	kW
Useful heat output (80°/60°C) (min - max)		14,8 - 44,2	14,8 - 88,3	14,8 - 88,3	kW
Useful heat output (50°/30°C) (min - max)		16,3 - 48,5	16,3 - 96,8	16,3 - 96,8	kW
Useful efficiency ref. NHV (80°C/60°C)		98,2	98,2	98,2	%
Useful efficiency ref. NHV (50°C/30°C)		107,7	107,7	107,7	%
Useful efficiency at 30% ref. NHV (80°C/60°C)		98,7			%
Useful efficiency at 30% ref. NHV (50°C/30°C)		108,7			%
Losses through the chimney with the burner operating		1,3			%
Losses through the chimney with the burner off		0,1			%
Losses through the casing (Tm=70°C)		0,5			%
Flue gas temperature		Return temp. + 5			°C
CO_2 at minimum - maximum	**G20**	9,0 - 9,0			%
CO_2 at minimum - maximum	**G30 - G31**	10,4 - 10,4			%
CO without air at minimum - maximum less than		11 - 91			mg/kWh
NOx class		5			
Air flow rate	**G20**	58,78	117,56	117,56	Nm^3/h
Air flow rate	**G30 - G31**	58,59	117,18	117,18	Nm^3/h
Flue gas flow rate	**G20**	71,04	142,08	142,08	Nm^3/h
Flue gas flow rate	**G30 - G31**	71,76	143,52	143,52	Nm^3/h
Flue gas mass flow rate (max-min)	**G20**	20,57 - 6,60	41,14 - 6,60	41,14 - 6,60	gr/s
Flue gas mass flow rate (max-min)	**G30 - G31**	20,52 - 6,85	41,04 - 6,85	41,04 - 6,85	gr/s
Residual head of boiler fan without pipes	**at min. heat output**	50	50	50	Pa
	at max. heat output	560	560	560	Pa
Residual head of boiler fan downstream from choke (*)	**at min. heat output**	40	40	40	Pa
	at max. heat output	490	490	490	Pa
Gas consumption (min. - max.)	**G20**	1,52 - 4,76	1,52 - 7,38	1,52 - 9,52	Sm^3/h
Gas consumption (min. - max.)	**G30**	1,16 - 3,64	1,16 - 5,64	1,16 - 7,28	kg/h
Gas consumption (min. - max.)	**G31**	1,14 - 3,57	1,14 - 5,54	1,14 - 7,14	kg/h
Minimum operating pressure, central heating		0,5			bar
Maximum operating pressure, central heating		6			bar
Maximum admissible temperature		90			°C
Range of boiler water temperature settings (± 3 °C)		20 - 80			°C
Water content		5	10	10	l
Power supply		230 - 50			V-Hz
Maximum power input		80	160	160	W
Index of protection		X0D			IP
Quantity of condensate		7,2	14,4	14,4	kg/h
Noise level at max / min heat output (**)		57,1 / 48,2	58,9 / 49,0	58,9 / 49,0	dBA

(*) Measurements obtained using the choke with which the boiler was homologated.
(**) Measurements taken at 1 m from the appliance, at a height of 1.5 m, with background noise of 36.5 dBA.

ACCESSORIES

The following accessories are available to be ordered separately.

ACCESSORY
Flue gas header kit
Water connection kit for installations < 100 kW
Water connection kit for installations > 100 kW
Remote control kit
Two-way valve kit
Injection pump kit
Conversion kit for room-sealed operation **CondexaPRO 50**
Conversion kit for room-sealed operation **CondexaPRO 100**

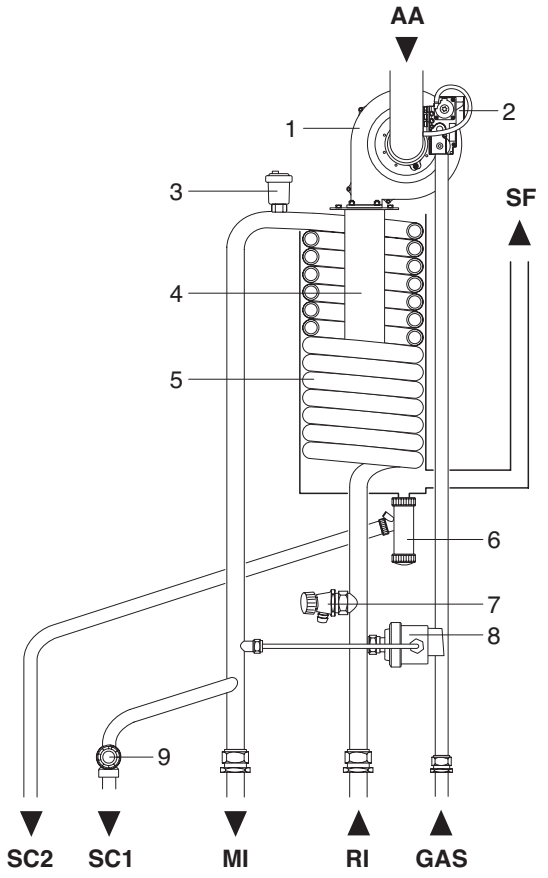

1 - Fan
2 - Gas valve
3 - Automatic vent valve
4 - Burner
5 - Heat exchanger
6 - Condensate drain trap
7 - Drain cock
8 - Water differential and minimum pressure switch (0,5 bar)
9 - Safety valve (6 bar)

AA - Air intake
SF - Flue gas outlet
SC1 - Safety valve drain
SC2 - Condensate drain
MI - Central heating flow outlet
RI - Central heating return inlet
GAS - Gas supply

Water-side pressure drop in the boiler

The **CondexaPRO** Boiler does not come with a pump, which must be installed in the system.
When sizing the pump, refer to the water-side pressure drop in the boiler, as shown in the figure below.

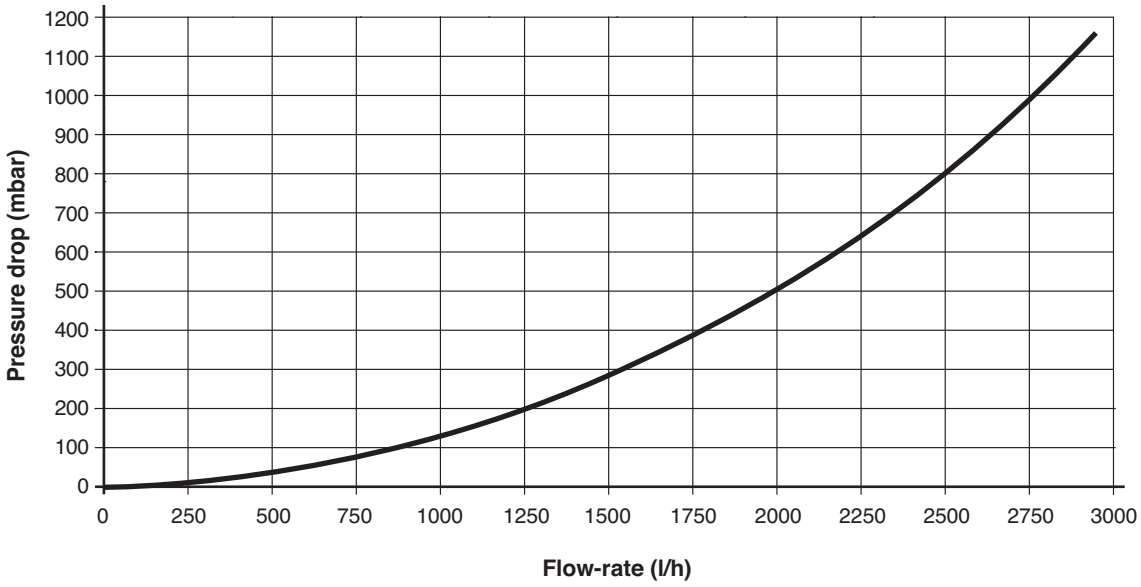

Heat exchanger efficiency

Efficiency vs. Water return temperature [50kW]

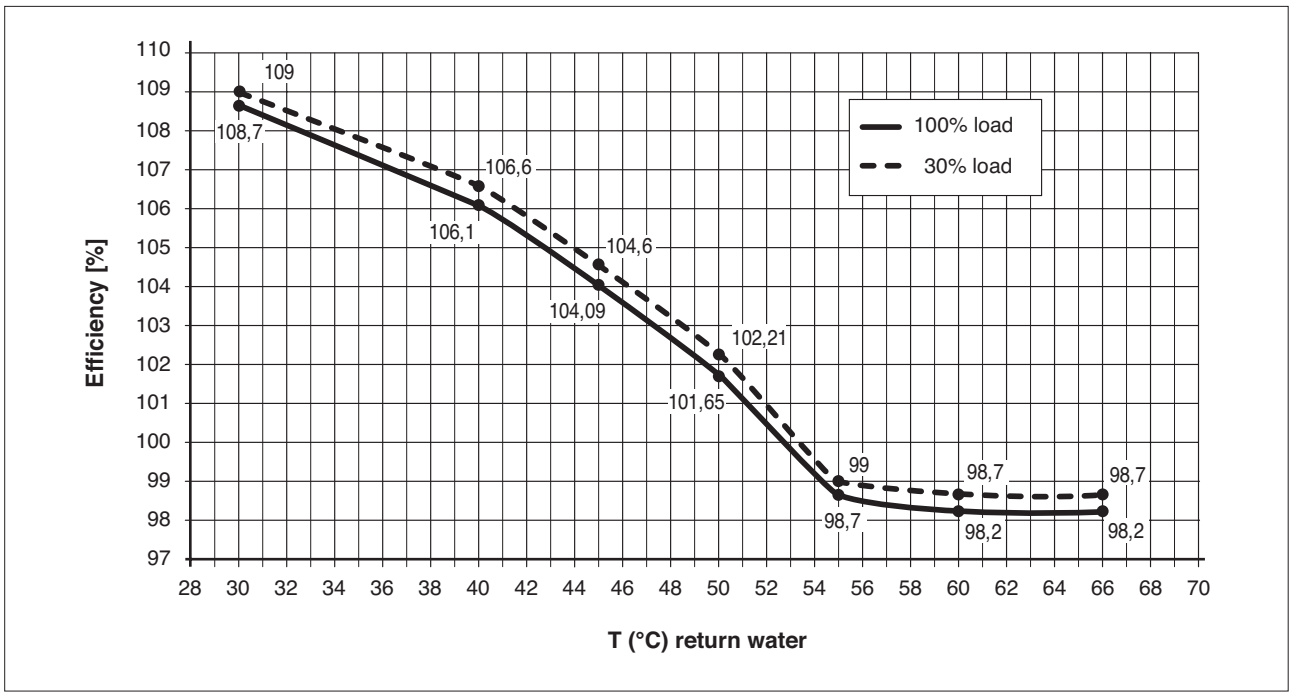

POSITIONING THE PROBES

The following probes/thermostats are installed for each heating unit:

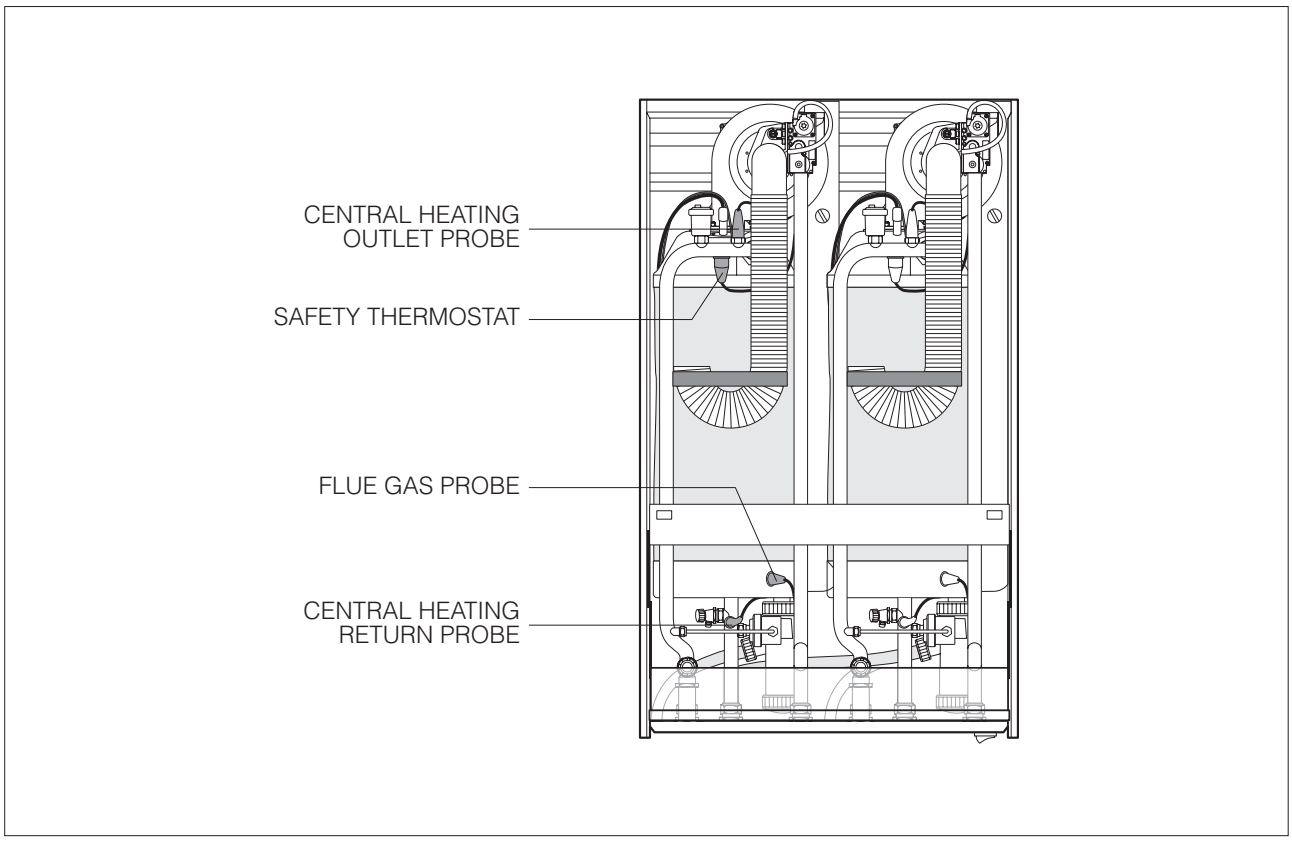

PUMPS

THE CondexaPRO Boiler does not come with a pump, which must be installed in the system.
When choosing the pump, refer to the following system diagrams.

Configuration with injection pumps

Boiler discharge head: 6 mWC
Boiler flow-rate: 2 m³/h for each pump.
Recommended pump TYPE A for each heating unit.

PB - DHW pump
PZ1 - Pump in zone 1 (high temperature)
PZ2 - Pump in zone 2 (low temperature)
P - Injection pump (accessory)

SZ1 - Probe in zone 1
SZ2 - Probe in zone 2
SB - DHW probe
SE - Outside probe

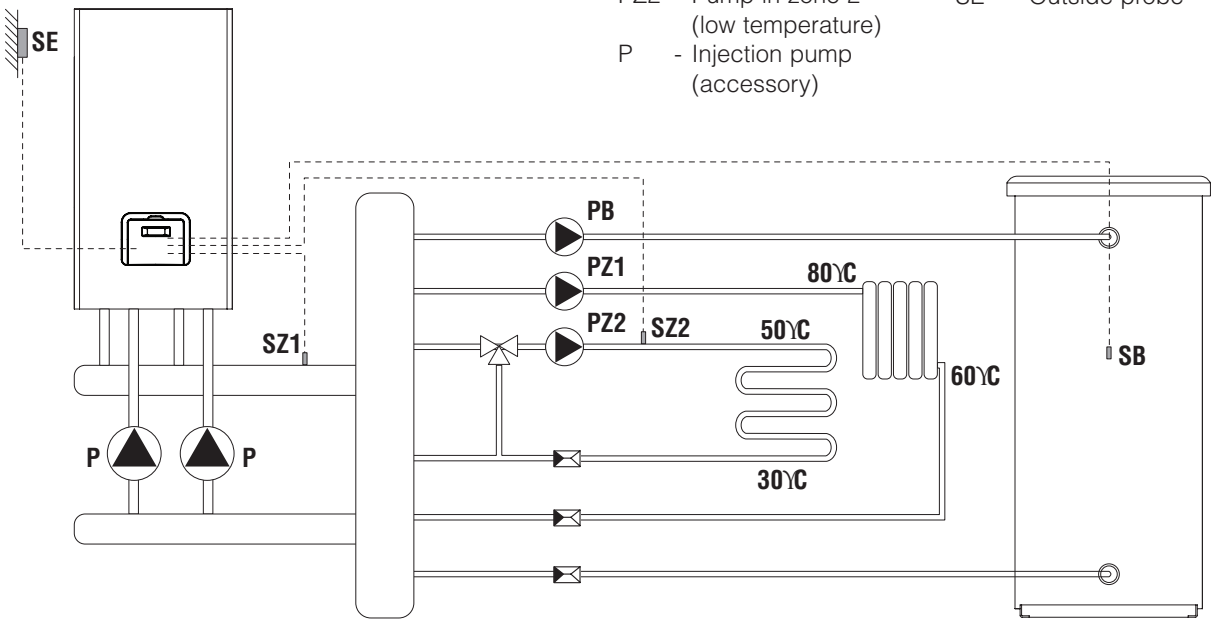

Configuration with loop pump and valves on the heating units (*)

Boiler discharge head: 7 mWC.
Boiler flow-rate: 2 m³/h for each heating unit.
Recommended: **CondexaPRO 50 M**: TYPE A; **100M/S**: TYPE B; **100M+100S**: TYPE C.

PB - DHW pump
PZ1 - Pump in zone 1 (high temperature)
PZ2 - System pump
V2 - Two-way valve (accessory)

SZ1 - Probe in zone 1
SZ2 - Probe in zone 2
SB - DHW probe
SE - Outside probe

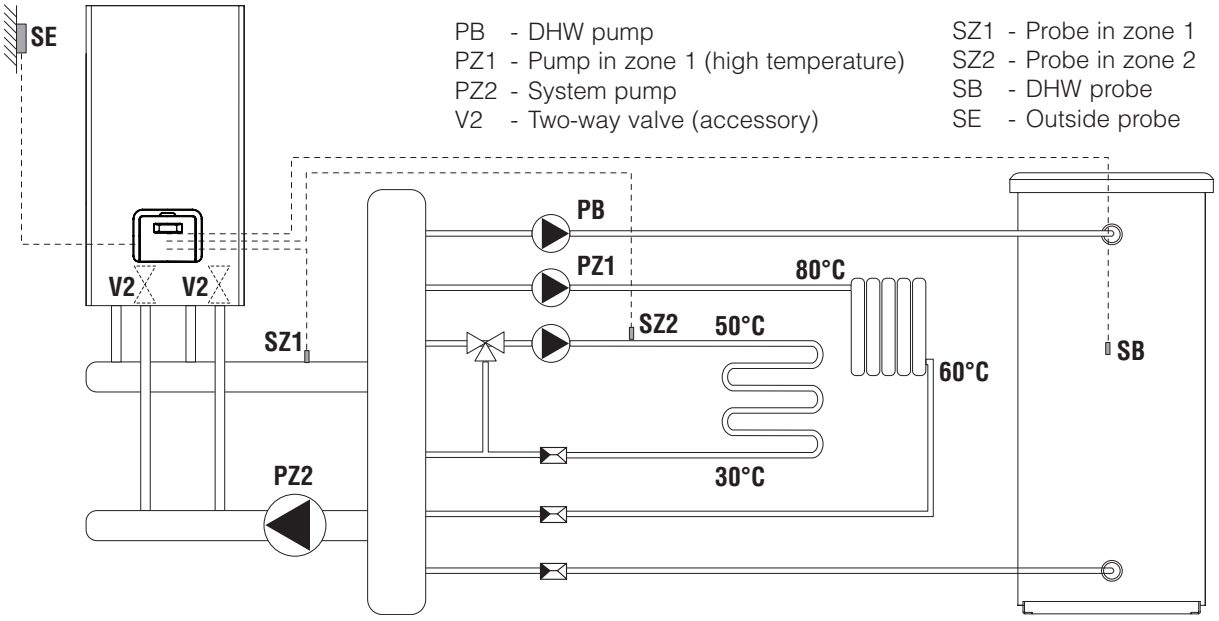

(*) With this configuration the pump in the low temperature circuit is managed externally by a thermostat (see parameter 34 on page 59).

⚠ Install probes SZ1, SZ2 and SB in a probe socket (outside of the boiler).

⚠ If the central heating system has an open type expansion vessel, a heat exchanger must be used to transfer heat to it from the boiler.

Pump TYPE A

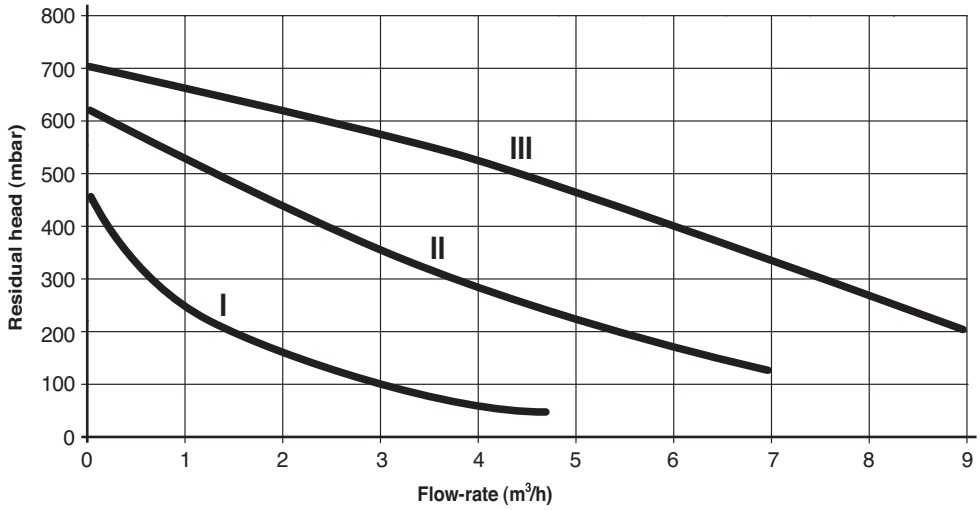

Pump TYPE B

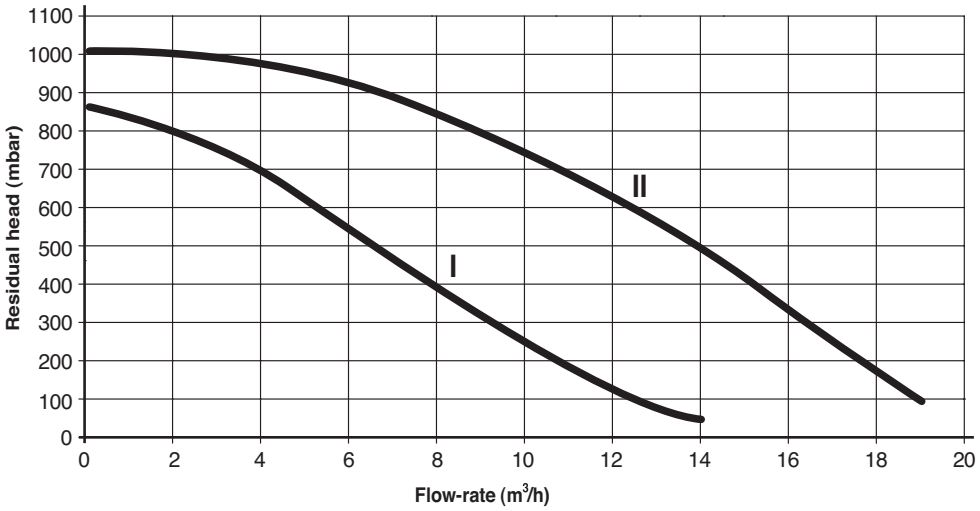

Pump TYPE C

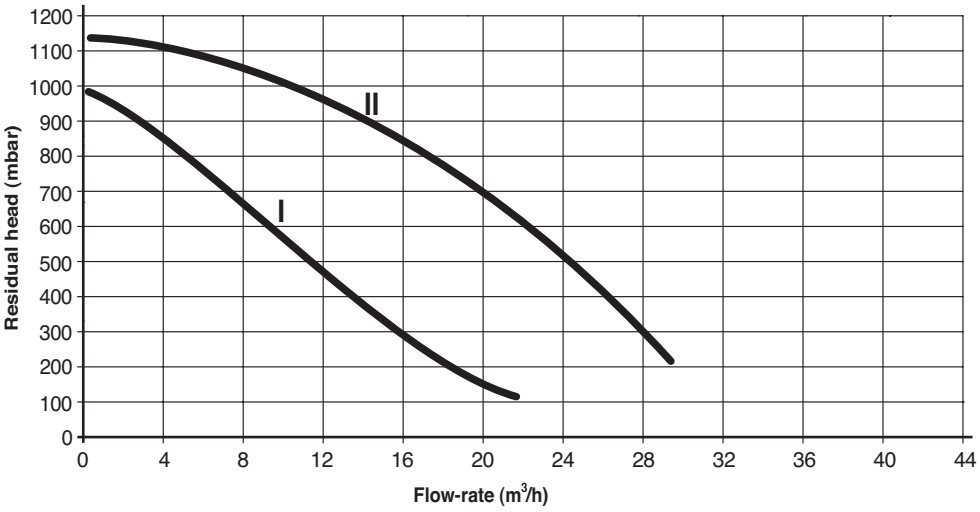

WIRING DIAGRAMS

The control panel on **CondexaPRO** models **50 M** and **100 M** contains one master board and one or two slave boards, depending on the output of the boiler. Model **100 S** contain just two slave boards. If connecting a series of boilers in cascading, the master board on the **CondexaPRO 50 M** or **100 M** manages all the boards on the **CondexaPRO 100 S** boilers via BUS.

CondexaPRO 50 M - 100 M **part 1**

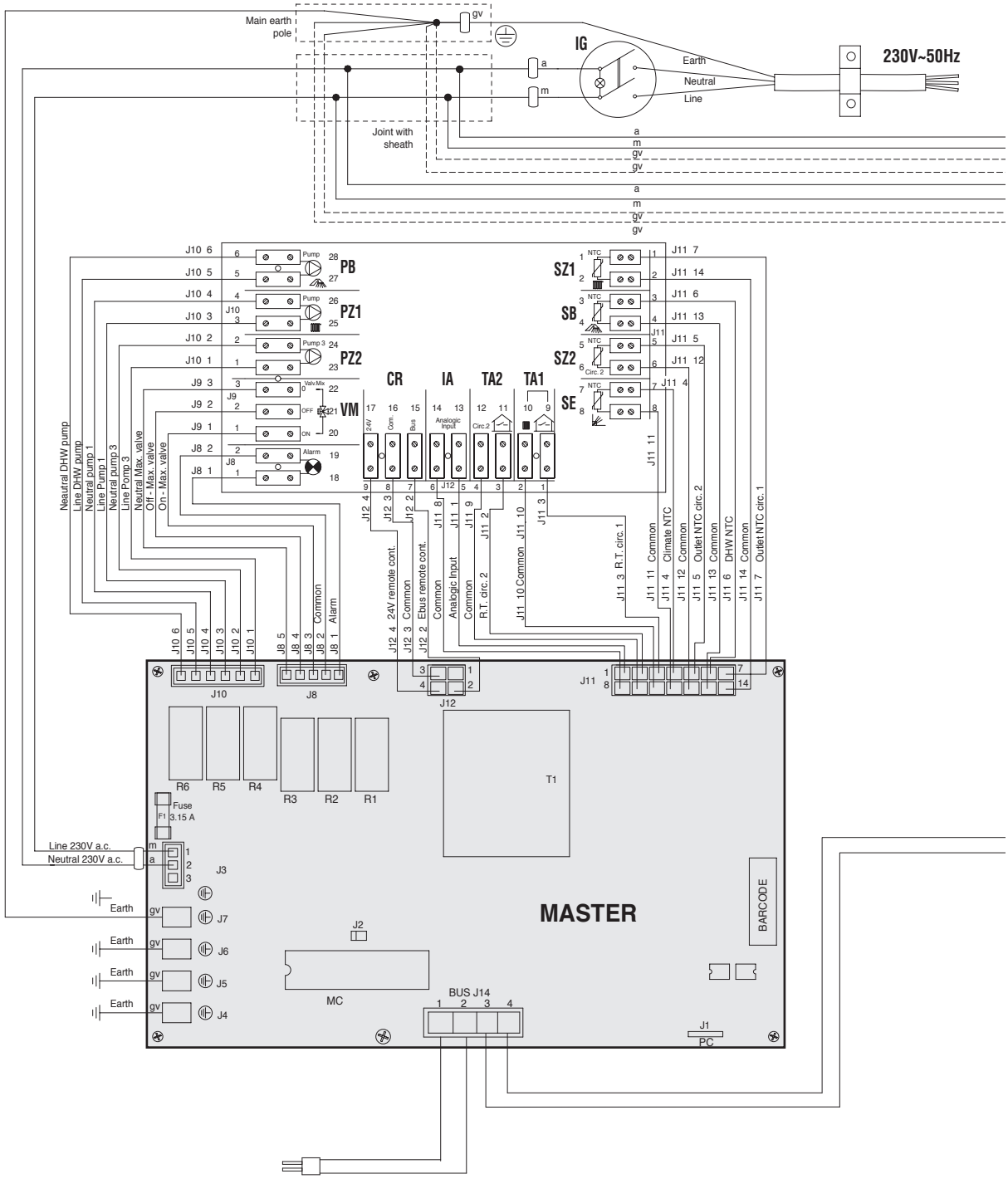

Bus line with male connector for connection to another model 100 S boiler.

Bus line with female connector for connection to another model 100 S boiler.

⚠ The pumps should be connected by installing suitable contactors with manual emergency operation.

part 2

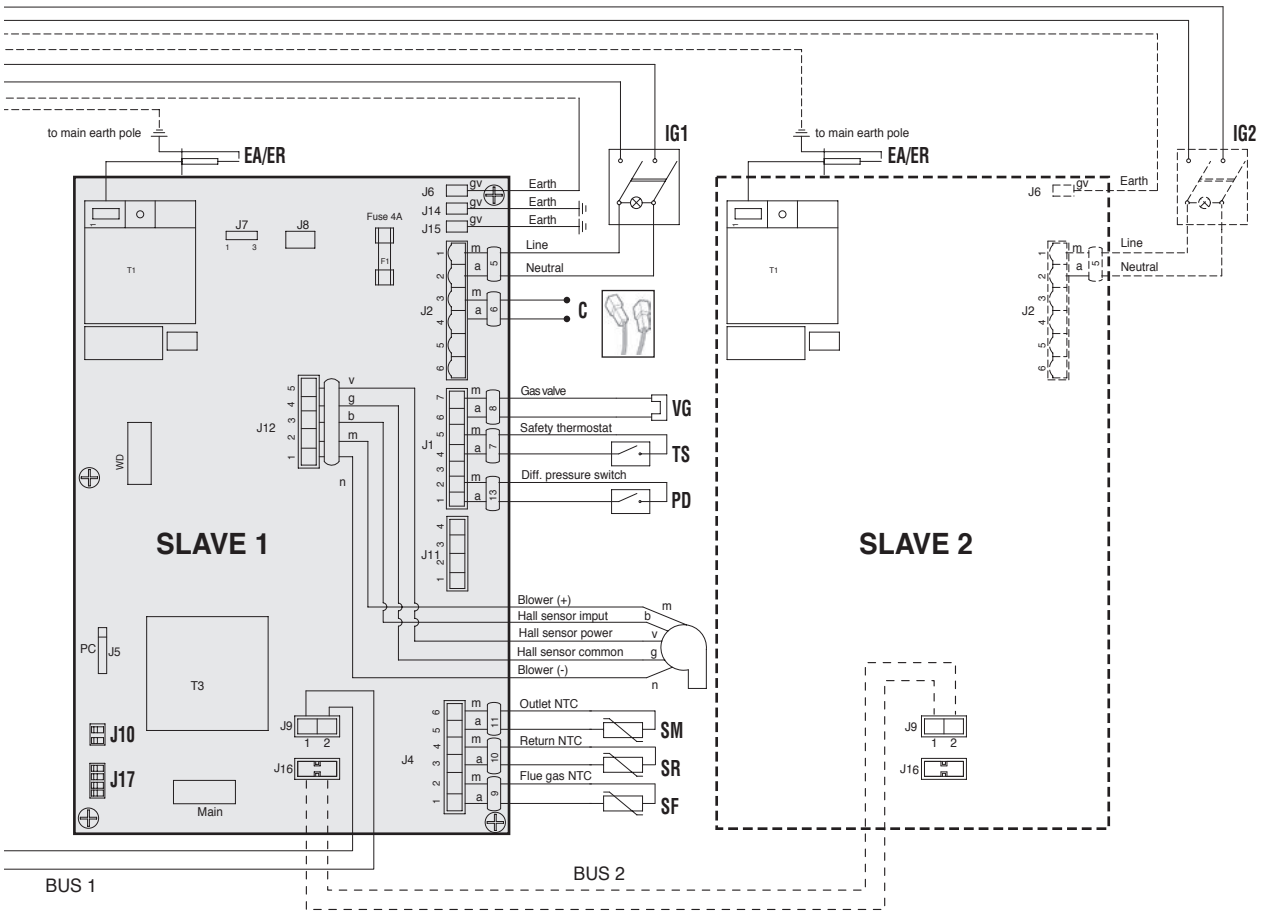

PB	- DHW pump	VG	- Gas valve
PZ1	- Pump in zone 1 (high temperature)	TS	- Safety thermostat
PZ2	- Pump in zone 2 (low temperature)	PD	- Water differential and minimum pressure switch (0,5 bar)
VM	- Mixing valve	SM	- Outlet probe
CR	- Remote control (accessory)	SR	- Return probe
IA	- Analogue input	SF	- Flue gas probe
SB	- DHW probe	EA/ER	- Ignition/detection electrode
SZ1	- Probe in zone 1	C	- Cable for connection to two-way valve or injection pump (accessories)
SZ2	- Probe in zone 2	IG	- Main boiler switch
SE	- Outside probe	IG1	- FIRST heating unit switch
TA1	- Room thermostat in zone 1 (high temperature)	IG2	- SECOND heating unit switch
TA2	- Room thermostat in zone 2 (low temperature)	J10/J17	- Microswitches for setting the address (see page 54)
	SYSTEM		HEATING UNIT

CondexaPRO 100 S

part 1

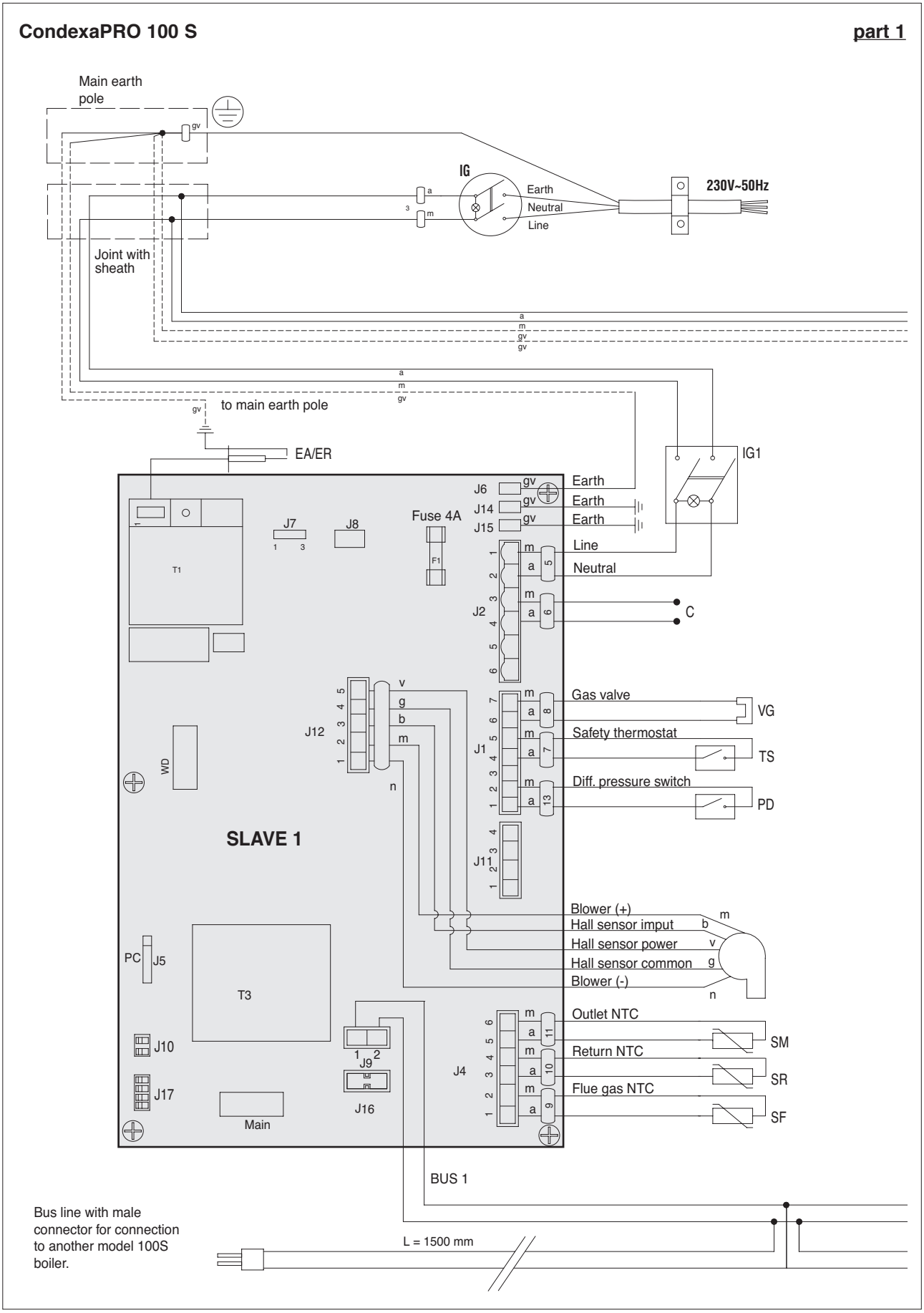

part 2

VG - Gas valve
TS - Safety thermostat
PD - Water differential and minimum pressure switch (0,5 bar)
SM - Outlet probe
SR - Return probe
SF - Flue gas probe
EA/ER - Ignition/detection electrode
C - Cable for connection to two-way valve or injection pump (accessories)
IG - Main boiler switch
IG1 - FIRST heating unit switch
IG2 - SECOND heating unit switch
J10/J17 - Microswitches for setting the address (see page 54)

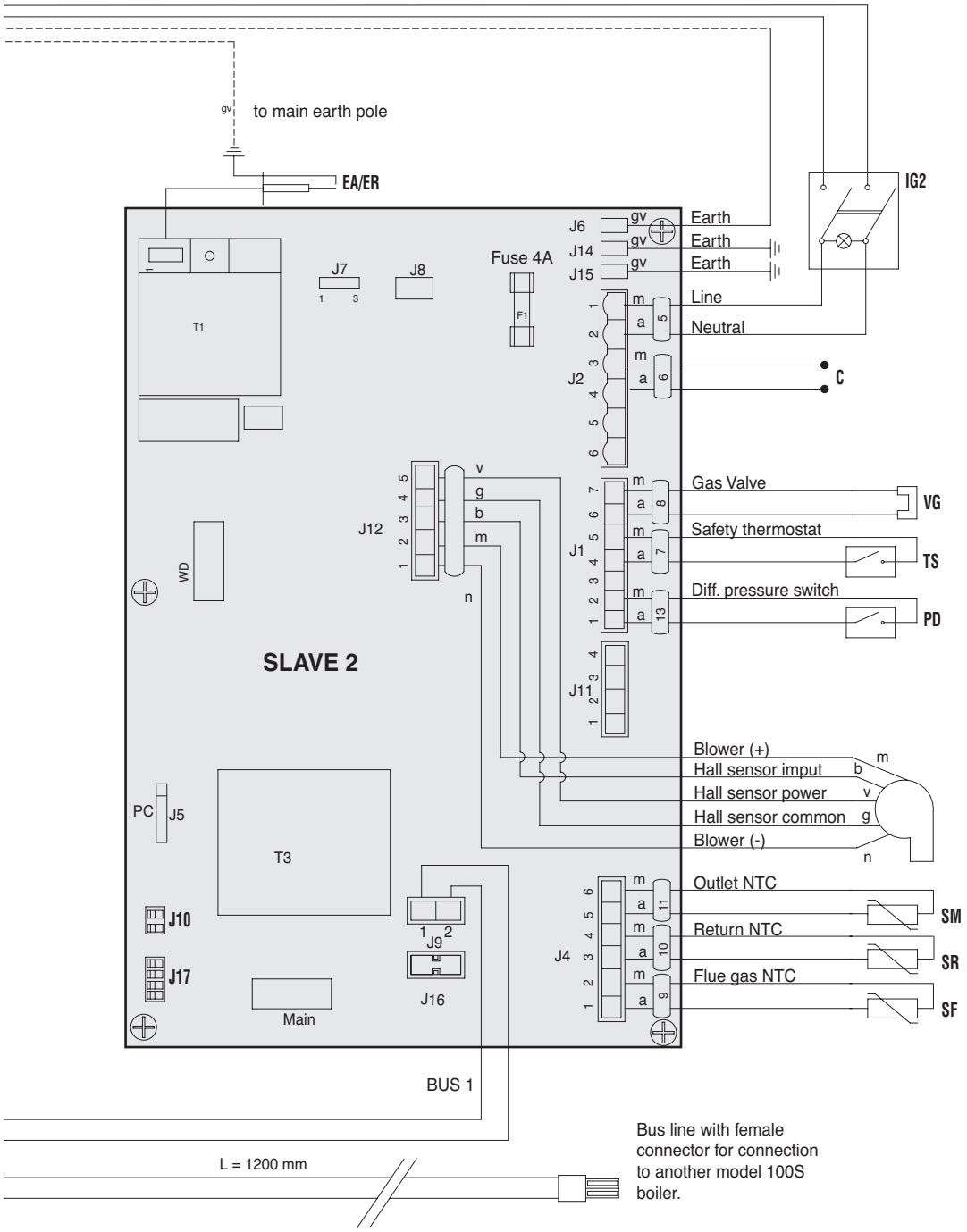

CondexaPRO 50 M

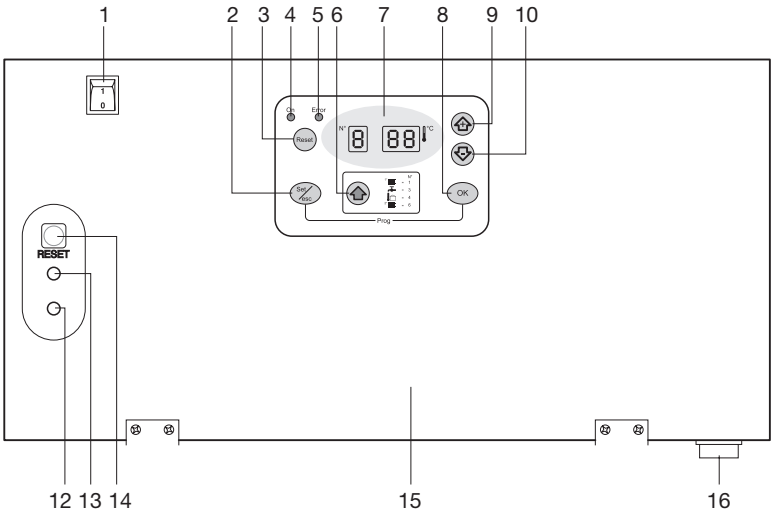

CondexaPRO 100 M

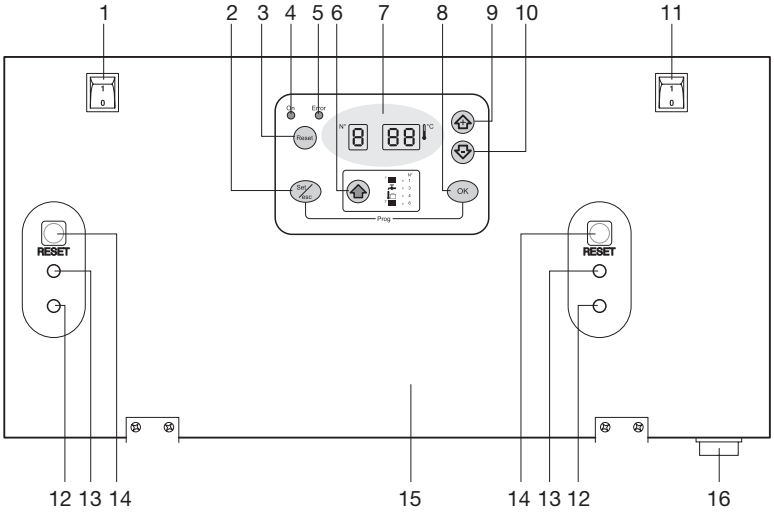

CondexaPRO 100 S

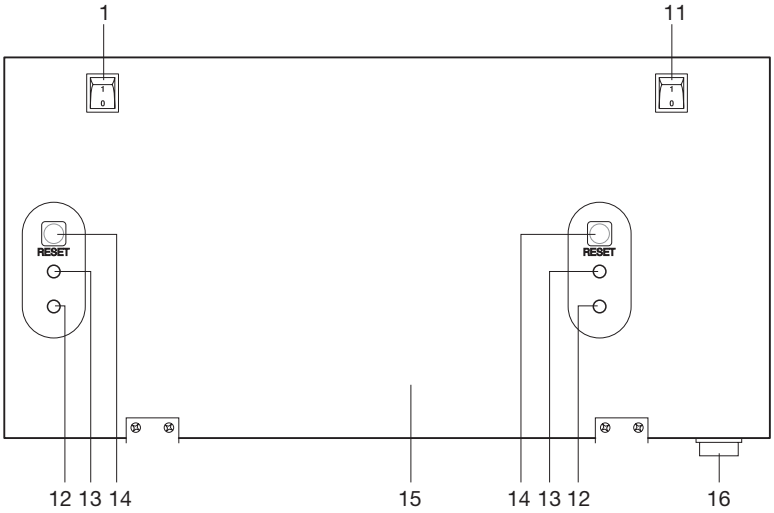

1 - FIRST heating unit switch
2 - Button for selecting the operating mode
3 - Reset button (Master)
4 - Electrical power indicator
5 - Boiler lockout signal
6 - Button for selecting the parameters
7 - Display
8 - Save button
9 - Button to increase values
10 - Button to decrease values
11 - SECOND heating unit switch
12 - Slave power supply signal:
- slow flashing = stand-by
- rapid flashing = ignition cycle
- fixed light = flame detected
13 - Slave lockout signal
14 - Reset button (Slave)
15 - Instrument panel
16 - Main boiler switch

Functional notes
The control panel on the **CondexaPRO** Boiler models **50 M** and **100 M** manages:

- The domestic hot water priority function whereby when there is demand for domestic hot water, the master board can also serve the high or low temperature circuit.

- The frost protection function, also active in standby, which starts the pump in the high temperature circuit and the loop pump if the temperature in the manifold falls below 5°C.
  If the outside probe is fitted, the pumps start if the outside temperature falls below 3°C.
  If after 10 minutes the temperature in the manifold is less than 5°C, one burner starts at maximum output, until the temperature in the manifold reaches 20°C.
  If after 10 minutes the temperature in the manifold exceeds 5°C but the outside temperature is less than 3°C, the pumps stay on until the outside temperature exceeds this value.

- The dispersion function: the pumps in the high and low temperature circuits remain on for 5 minutes after the last burner has shut down. There is a 6 minute delay from when the burner shuts down before closing the two-way valve. When the last burner has shut down, the valve closes only when there is no demand from the room thermostat.

- The cascading function: to manage the output delivered by the system, the minimum and maximum number of burners started can be selected.

- The burner on/off control function: in both cascading modes there is a function that limits the ignition and shutdown of the burners in the event of low heating requirement.

USER INTERFACE

The buttons on the **CondexaPRO 50 M** and **100 M** control panel have different functions in different modes. For example, the combination of two buttons corresponds to one specific function. Alternatively, a function can be activated by pressing the button briefly or by holding it for around 5 seconds.

Reset
This resets the electronic board after a permanent lockout.

Set/esc
Set: is used to enter parameter setting mode and monitor mode on the individual units.

⬆
This is used to display the operating status of the various circuits managed by the Master board.

+ and **-**
Permettono di aumentare o diminuire un determinato valore

OK
This is used to save the new values.

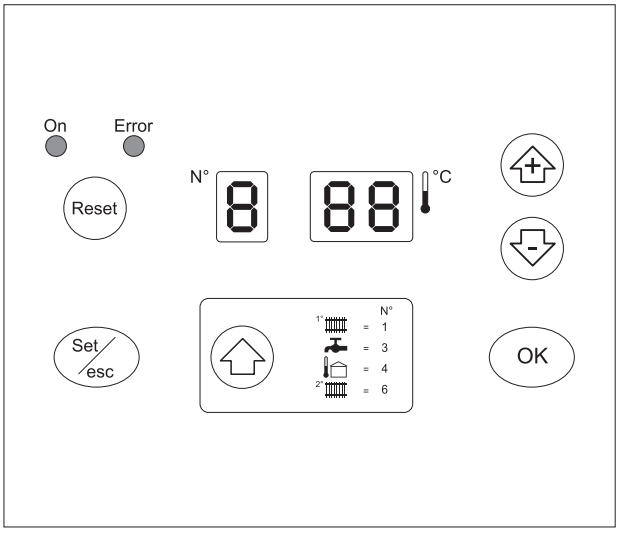

DISPLAY MODE

The red LED (see ref. 4 on page 18) comes on in the event of faults that cause the permanent lockout of a heating unit (normal operation is reset only by pressing the Master or Slave reset button).

The 3 digits with seven segments display the status of the system:

Status of the system	Display
No central heating or DHW demand. The two digits on the right display the outlet temperature T1. E.g.: T1 = 30°C	0 30
Demand from circuit no.1 or from circuits 1 and 2 together. The two digits on the right display the outlet temp. T1. E.g.: T1 = 80°C	1. 80
Demand from the DHW circuit or simultaneous operation. The two digits on the right display the outlet temp. T1 E.g.: T1 = 80°C. The decimal point after the 1st digit on the left flashes	1. 80
Demand from the 2nd circuit The two digits on the right display the outlet temperature T1. E.g. T1 = 80°C.	1 80
Anti-frost function	F 30

READOUT MODE

(TEMPERATURE VALUES AND OPERATING STATUS OF THE VARIOUS CIRCUITS)

Press the "⬆" button to scroll forwards and display the values set for the individual circuits.
The values listed below will be displayed in sequence when pressing the "⬆" button.

	Value displayed	Display
1	Outlet temperature T1 in the high temperature circuit. E.g. : T1 = 80°C	1 80
2	DHW temperature T3. E.g.: storage heater temperature = 50°C	3 50
3	Outside temperature T4. E.g. T4 = 7°C	4 07
4	Outlet temperature in 2nd circuit or low temperature circuit T6	6 50
5	Room thermostat in the 1st circuit, closed or open. OFF = contact open ON = contact closed	H oF H on
6	Room thermostat in the 2nd circuit, closed or open OFF = contact open ON = contact closed	L oF L on
7	0-10V analogue input E.g. 5.5V, 10V	7 5.5 7 10

	Value displayed	Display
8	Operating status of the mixing valve E.g.: closing, opening, standby	8 C 8 0 8 - -
9	Operating status of the main pump E.g.: pump not working, pump working	P 1.0 P 1.1
10	Operating status of the DHW pump E.g.: pump not working, pump working	P 2.0 P 2.1
11	Operating status of the secondary pump E.g.: pump not working, pump working	P 3.0 P 3.1

To exit the display of the values, press the **"OK"** button.
If no operation is performed for 5 minutes, the board automatically returns to Display mode.

SETTING THE USER PARAMETERS

Pressing "⬆" displays the following values in sequence:

- Outlet temperature T1 in the high temperature circuit 1 80
- DHW temperature T3 3 50
- Outlet temperature in the second circuit or low temperature circuit T6. 6 50

To change the corresponding set points:

- Press "**Set/esc**", the corresponding value will be displayed and the two digits on the right will flash.
- If the value does not need to be changed, press "**Set/esc**" again to return to Display mode.
- If the value needs to be changed, press "**+**" or "**-**" until reaching the desired value. Press "**OK**" to save the new value. The value displayed will stop flashing and the display will return to Display mode.

Example: changing the set point in the low temperature circuit from 50°C to 40°C

	Procedure	Display
1	E.g.: Value read on the display in the high temperature circuit 80°C	1 80
2	Press "⬆" to access Readout mode, press the button again and scroll the first digit to 6 so as to display the set value, E.g.: 50°C	6 50

	Procedure	Display
3	Press “**Set/esc**”	6 50
4	Press “**-**” to change the set point to the desired value. E.g.: 40°C.	6 40
5	Press “**OK**” to save the new value	6 40
6	After 3 seconds Display mode resumes, with the new value set.	

If after having pressed “**OK**” no change is made for 10 seconds (because the desired value is already set), the operation of the board returns to Display mode.

If after having pressed “**+**” or “**-**” no other button is pressed for at least one minute, Display mode resumes. If this happens, the new value is not saved.

MONITOR MODE

Press “**Set/esc**” for 5 seconds to access "Monitor" mode. This mode is used to check the operating values of each individual unit in the system (addresses from 1 to 60).

	Operation	Display
1	The boiler is operating with the high temperature circuit at 80°C	1. 80
2	Press “**Set/esc**” for 5 seconds. The display indicates that the values and the operating status of unit 1 can be read.	U 01
3	Press “**+**” or “**-**” to scroll and read the values for the desired unit.	U 19
4	Pressing “⬆” on the display shows the 1st value for the selected unit. Pressing the "⬆" button again displays the following values. E.g. outlet temperature 70°C	1 70
5	To exit Monitor mode, press “**Set/esc**”. If within 5 minutes no button is pressed or no operation is performed, Display mode resumes.	1. 80

Press “⬆” to display the subsequent values for the individual unit:

	Value	Display
1	Outlet temperature E.g.: 70°C	1 70
2	Return temperature E.g.: 50°C	2 50
3	Flue gas temperature E.g.: 60°C	5 60
4	Ionisation current (index from 0 to 99) E.g.: ionisation current index 44	C 44

	Value	Display
5	Fan PWM signal (%). If PWM = 100%, this corresponds to 99 on the display. E.g.: 66 %	7 66
6	Pressure switch open/closed E.g.: contact open	F on F oF
7	Pump or motorised valve on the individual unit on/off E.g.: Pump ON E.g.: Pump OFF	8 on 8 oF
8	Maximum ionisation current (range from 0 to 99) at first attempt E.g.: maximum ionisation current 80	I 80
9	Hours of boiler functioning (from 0 to 9999 hours) E.g.: 8050 hours: the display reads out paired figures showing the hours in a sequence of thousands, hundreds, tens and units.	8 80 8 50

INSTALLER PROGRAMMING MODE

The installer parameters can be changed by entering the password (**22**).
The password for the installer level allows access to display and change the user and installer parameters.
Procedure to enter programming mode:

	Procedure	Display
1	E.g.: the outlet temperature T1 is 80°C	1. 80
2	Press "**Set/esc**" and "**OK**". After 5 seconds the second and third digit will flash.	P 00
3	Use "**+**" and "**-**" to enter the first number in the password on the centre digit. E.g.: password = X2	P 22
4	Press "**OK**" to save the second number in the password.	P 22
5	Use "**+**" and "**-**" to enter the first number in the password on the centre digit. E.g.: password = 22	P 22
6	Press "**OK**" to confirm the password, if the password is wrong the board returns to Display mode. If the password is correct the first parameter P06 is displayed.	P 06
7	Press "**+**" and "**-**" to scroll the parameters enabled by the password. Press "**Set/esc**" to start setting the parameters. The code P-XX and the corresponding value will alternate on the display.	
8	Use "**+**" and "**-**" to change the value of the parameter. Whenever a button is pressed, the alternating display of the parameter and the corresponding value is stopped for 5 seconds and only the value is shown.	
9	Press "**OK**" to save the new value of the parameter.	

To exit installer programming mode press "**OK**".
For the complete list of parameters see page 58.

TEST MODE

In Test mode, a high temperature heating demand can be generated corresponding to maximum output and minimum output.
All the system fans must be on. If the installer switches off some of the Slaves, the others, connected to the Master, must continue operating.
To enter Test mode from Display mode, proceed as follows:

	Procedure	Display
1	Press "**Set/esc**" and "**+**" at the same time per 5 seconds.	
	After 5 seconds the maximum or minimum speed can be selected using the "**+**" and "**-**" buttons. All the system fans will operate at the selected speed. The first digit will show the selected speed: H = maximum speed L = minimum speed. The other two digits will show the outlet temperature. E.g.: T1 = 80°C.	H 80
		L 80
2	Press "**OK**" to exit Test mode and return to Display mode.	1 80

ERROR MODE

The display starts flashing when there is a fault on any of the heating units. Proceed as follows to identify the faults.

	Procedure	Display
1	The display starts flashing to signal one or more errors.	1 80
1.b	Press "**+**": the display will show the address of the first unit, alternating with the first error code. Press "**+**" again to display the other errors on this unit. The errors on the following unit with faults will be displayed in sequence, by pressing "**+**" Pressing **"-"** displays the errors in reverse order (E.g. unit 2 error code E02). If the errors come from the Master board, these are displayed as errors on unit 00 (U 00 + error code).	U 02
		E 05
2	Press "**Set/esc**" to exit Error mode and return to Display mode.	1 80

For the complete list of errors, see page 56.

PERMANENT LOCKOUT

In the event where the burners are in permanent lockout, press "**Reset**" to resume operation.

If "**Reset**" is pressed in readout mode, all the Slave heating units will be reset.

If "**Reset**" is pressed when displaying the error that caused the permanent lockout, only the heating unit in question will be reset.

RECEIVING THE PRODUCT

The **Vokera CondexaPRO** Boiler is supplied in a single package protected by a cardboard box.

The following material is supplied with the boiler:

- Installation and operation manual
- Warranty certificate
- Water pressure test certificate
- Spare parts catalogue
- Outside probe
- Kit for conversion from natural gas to LPG
- Assembly template.

⚠ The Installation and operation manual is an integral part of the appliance and must be read and kept with care.

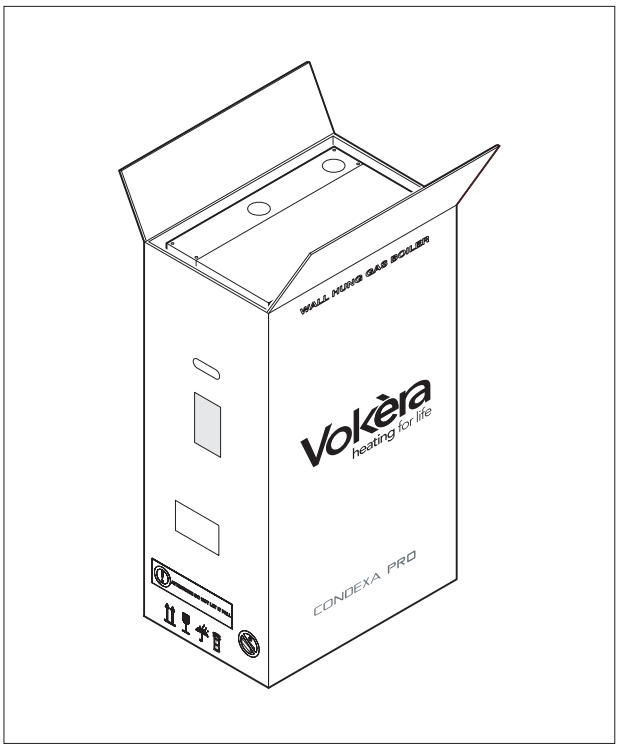

DIMENSIONS AND WEIGHT

Description	50 M	100 M - 100 S	
W	600		mm
D	380		mm
H	1000		mm
Net weight	~ 60	~ 90	kg
Weight with packaging	~ 65	~ 95	kg

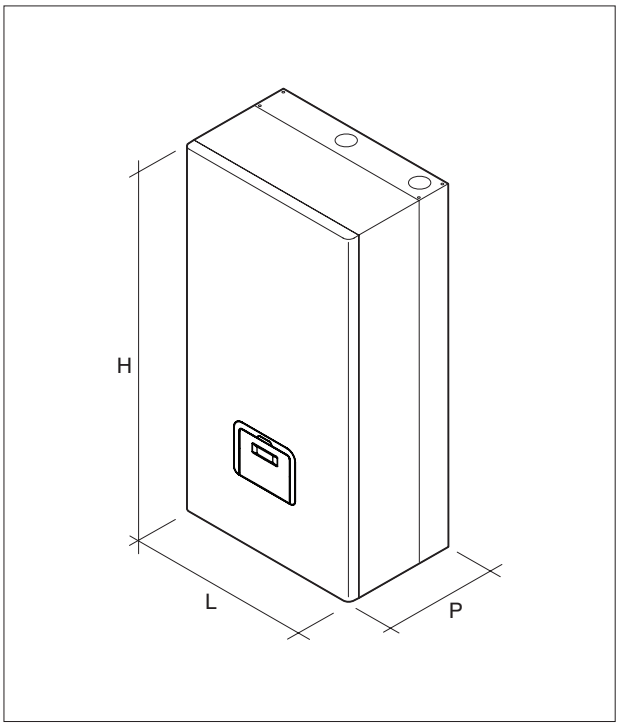

HANDLING

Once having removed the packaging, the **Vokera CondexaPRO** Boiler is handled manually by tilting and lifting it, grabbing the points shown in the figure.

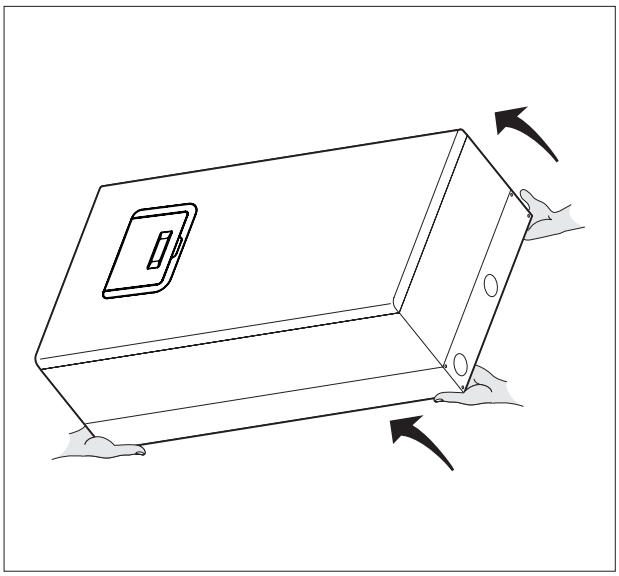

⚠ **Do not grab the casing of the boiler, but rather the "solid" parts such as the boiler bed and the rear structure.**

⚠ Adopt suitable safety and protection measures.

⛔ The packaging material must not be dispersed in the environment or left within the reach of children as it is a potential source of hazard. It must be disposed of according to the legislation in force.

ROOM WHERE THE BOILER IS INSTALLED

The **Vokera CondexaPRO** boiler must be installed in rooms used exclusively for this purpose, provided with adequately sized ventilation openings, in compliance with any current standards and low applicable. If the combustion air is taken from outside the room where the boiler is installed, **CondexaPRO** operates as a room-sealed appliance (type C).

⚠ Provide enough clearance to access the safety and control devices and to carry out the servicing operations.

⚠ Check that the index of protection of the boiler is suitable for the characteristics of the room where the appliance is installed.

⚠ If the boilers operate on gas fuel with a higher specific weight than air, the electrical parts must be located at least 500 mm from the floor.

⛔ The boilers cannot be installed outside as they are not designed for outdoor operation.

INSTALLATION IN OLD SYSTEMS OR SYSTEMS TO BE UPGRADED

Where **Vokera CondexaPRO** Boilers are installed in old systems or systems to be upgraded, check that:

- The flue is suitable for the temperature of the products of combustion with condensing operation, calculated and manufactured according to the standards, as straight as possible, airtight, insulated and not blocked or choked. It must also be fitted with suitable condensate collection and drain systems

- The electrical system has been installed in compliance with the relevant standards by qualified personnel

- The fuel supply line and any cylinders or tanks (LPG) are made and installed according to the relevant standards

- The expansion vessel can completely absorb the expansion of the fluid contained in the system

- The flow-rate and the discharge head of the pump are suitable for the characteristics of the system

- The system is flushed, treated, vented and pressure tested. To clean the system, see the paragraph on "Water connections", page 28. The manufacturer is not liable for any damage caused by the incorrect flushing, treatment and venting etc of the system.

- The condensate drain system (drain trap) is connected and runs into the sewerage drain or a neutraliser, where required by the legislation in force.

- A treatment system is available for special supply/top-up water requirements (for the reference values, see the table).

⚠ The manufacturer is not liable for any damage caused by the incorrect layout or installation of the flue system which must be in-accordance with any current standards and law applicable

⚠ The flues for condensing boilers are made from special material and differ from those used for standard boilers.

SUPPLY WATER VALUES	
pH	6-8
Conductivity	less than 200 mV/cm (25°C)
Chloride ions	less than 50 ppm
Sulphuric acid ions	less than 50 ppm
Total iron	less than 0,3 ppm
Alkalinity M	less than 50 ppm
Total hardness	less than 35°F
Sulphur ions	none
Ammonia ions	none
Silica ions	less than 30 ppm

INSTALLING THE BOILER

The **Vokera CondexaPRO** Boiler must be secured to a solid brick wall using the bracket (1).

For installation:
- Position the bracket (1) on the wall at a height of around 200 cm from the ground, using a spirit level to make sure that the holes are perfectly horizontal
- Mark the fastening holes on the wall
- Drill the holes and insert the expansion plugs (2)
- Fasten the bracket to the wall using the screws (3)
- Hook the boiler to the bracket.

⚠ The height of the boiler should chosen so as to simplify the dismantling and servicing operations.

⚠ The **Vokera CondexaPRO** Boiler is not designed for outdoor installation.

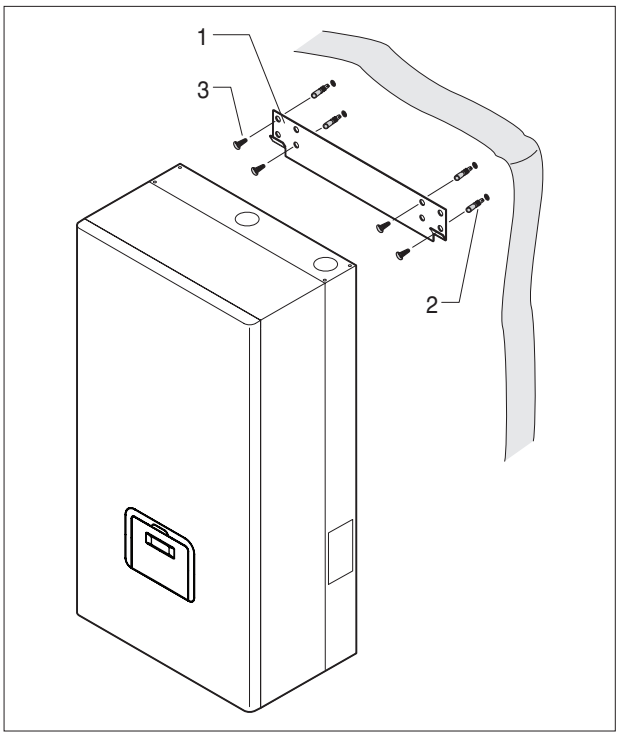

WATER CONNECTIONS

The **Vokera CondexaPRO** Boilers are designed and built to be installed in central heating and domestic hot water systems. The characteristics of the water fittings are as follows:

MI - Central heating flow outlet 1" M
RI - Central heating return inlet 1" M
Gas - Gas supply 3/4" M

CONDENSATE COLLECTION
Identify the condensate drain (S) located at the bottom of the boiler and then:
- remove the ring nut/nuts (1)
- pass the hose (2) through the hole and replace the ring nut on the outside.

Pipe the condensate into the sewerage drain or a neutraliser, where required and in-accordance with any legislation in force.

⚠ The manufacturer is not liable for any damage caused by the failure to install the condensate drain pipe.

⚠ The condensate drain pipe must be watertight.

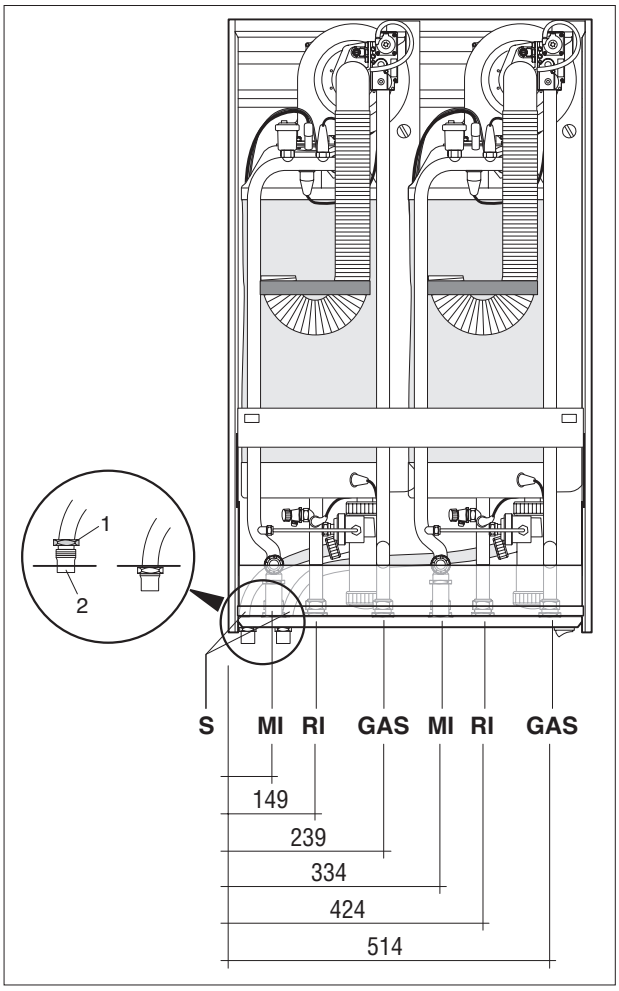

CLEANING THE SYSTEM

This preliminary operation is required when installing the heat generator in pre-existing systems, and is also recommended in new systems, so as to remove any scale, impurities, processing residues etc. Power Flushing is recommended for system cleaning.

To clean the system, if the old heat generator is still installed in the system, proceed as follows:

- Add scale-remover into the system water circuit;
- Operate the system with the heat generator on for around 7 days;
- Empty the dirty water from the system and flush with clean water. Repeat the operation until the system is clean.

If the old heat generator is not installed or not available, use a pump to circulate the water with the additive in the system for around 10 days, and carry out flushing as described in the previous point. At the end of the cleaning operations, before installing the boiler, an additive should be introduced into the water circuit that provides protection against corrosion and fouling.

⚠ For additional information on the type and the use of the additives, contact **Vokera Ltd** or a suitable additives manufacture.

Water connection kits

To assist the construction of the water circuit, two accessory kits are available, featuring water headers and support brackets:

water connection kit for installations up to 100 kW

1 gas manifold, diameter 45 mm
1 central heating outlet manifold, diameter 45 mm
1 central heating return manifold, diameter 45 mm

2" female fittings.

water connection kit for installations above 100 kW

1 gas manifold, diameter 3"
1 insulated central heating outlet manifold, Ø 3”
1 insulated central heating return manifold, Ø 3”

DN 80 - PN 6 flanged pipes.

⚠ Identify the unit that is closest to the central heating flow outlet as the Master boiler, so as to minimise the length of the cables to the pumps, the outlet probe and any storage heater probe.

⚠ The outlet probe should be fitted in the socket nearest to the central heating flow outlet, in the direction of water flow.

Water connection kit for installations up to 100 kW

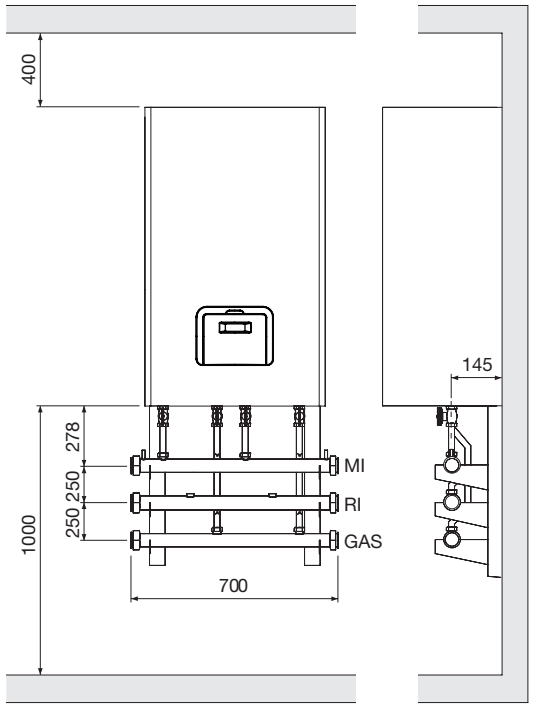

Water connection kit for installations above 100 kW

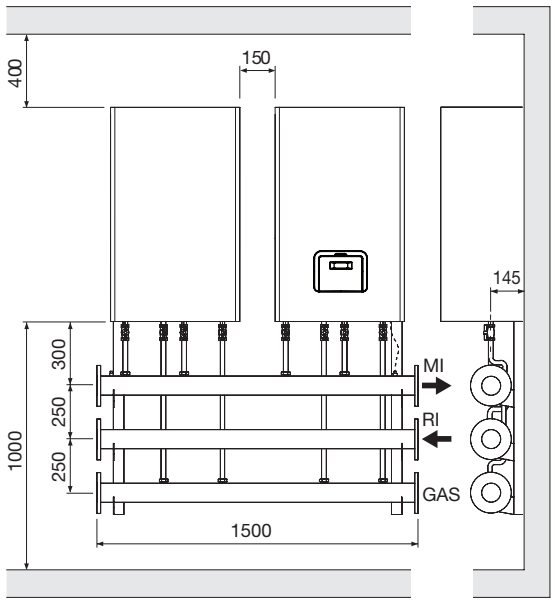

FUEL CONNECTIONS

The **Vokera CondexaPRO** Boiler must be connected to the natural gas or LPG supply in compliance with the relevant standards in force.

Before making the connections, check that:
- the type of gas is the same that the appliance is set for
- the pipes are thoroughly clean
- the gas supply pipes are the same size or larger than the fitting on the boiler (3/4"), with a pressure drop that is less than the pressure drop between the gas supply and the appliance.

When installation is completed, check that the joints are all tight, as required by the installation standards.

A suitable filter should be installed on the gas line.

FLUE GAS OUTLET AND COMBUSTION AIR INTAKE

The flue and the fitting to the flue must be made in compliance with the standards and the legislation in force, as well as with local regulations.
Use of heat resistant, condensate resistant and stress resistant rigid pipe and sealed joints is mandatory.

⚠ Non-insulated flues are potential sources of danger.

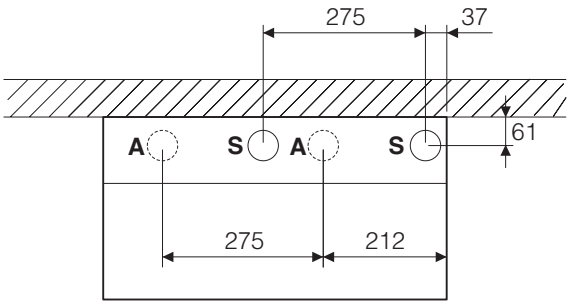

A - Air intake Ø 50 mm
(Conversion kit for room-sealed operation **CondexaPRO 50**
Conversion kit for room-sealed operation **CondexaPRO 100**)
S - Flue Ø 50 mm

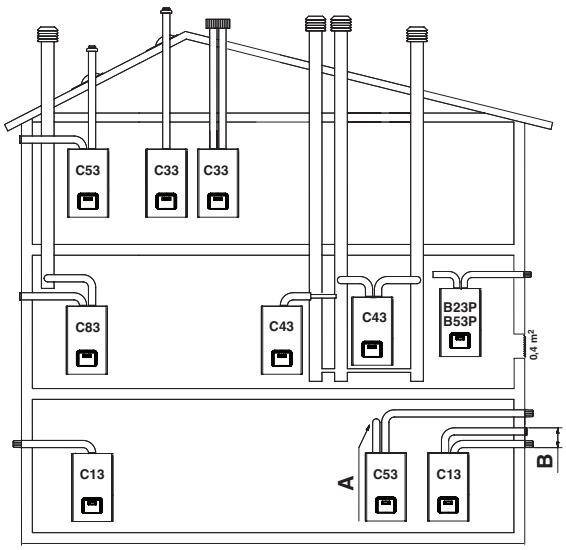

B23 - B53	Indoor air intake, outdoor vent.
C13x	Concentric wall vent. Twin flue pipes can be used to connect to the boiler, but the wall through-pipes must be concentric or located close enough (within 50 cm) to be subjected to similar wind conditions.
C33x	Concentric roof vent. Through-pipes as for C13x.
C43x	Vent and air intake via shared twin pipes, subjected to similar wind conditions.
C53x	Separate wall or roof vent and air intake, in areas of different pressure. The vent and air intake must never be located on opposite walls.
C63 - C63x	Vent and air intake using pipes sold and certified separately (1856/1).
C83	Vent to individual or shared stack, wall air intake.

Always conform to applicable national and local standards governing the design and installation of flue gas vents.

AIR INTAKE AND VENT PIPE SIZES

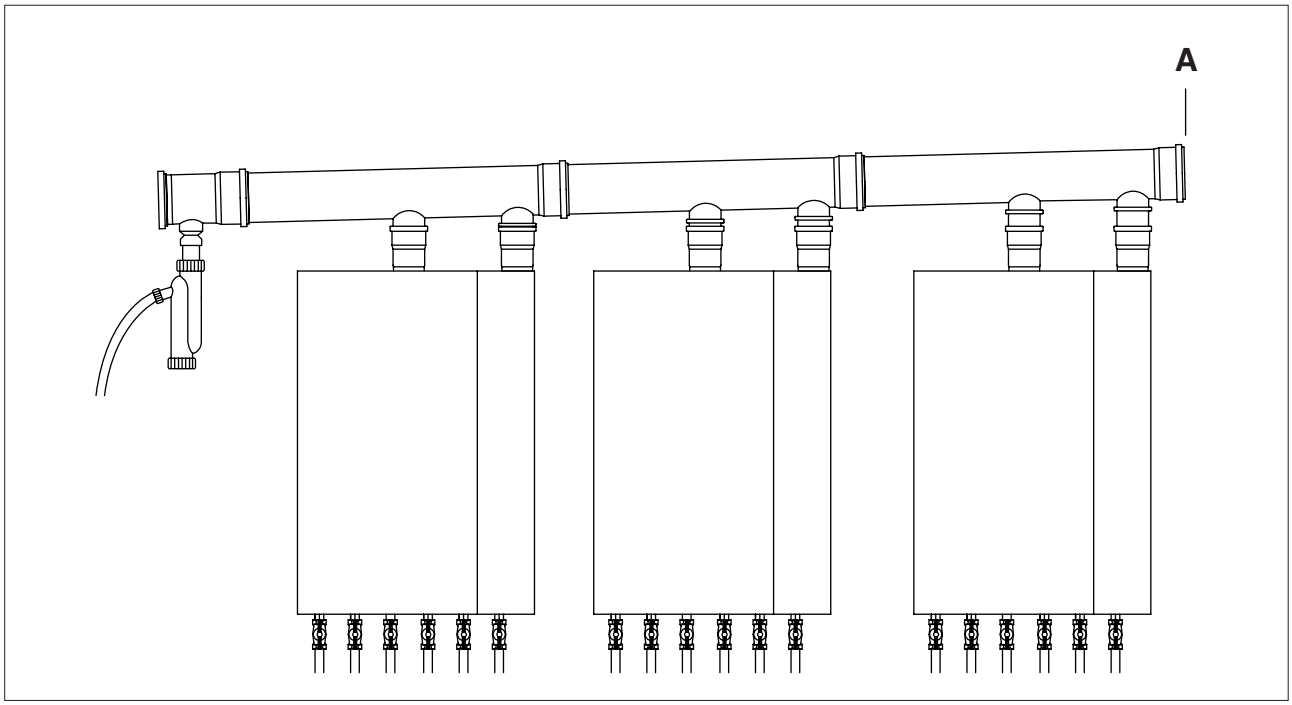

⚠ Measurements obtained using the pipes with which the boiler was homologated, downstream from the flue gas manifold (from point "A" on).

Maximum lenght of pipe air + flue (m)				
TOTAL installed power (kW)	**with Ø 50 mm Ø 80 mm**	**with Ø 125 mm**	**with Ø 160 mm**	**with Ø 200 mm**
50	30	55	60	100
100	-	55	60	100
150	-	55	60	100
200	-	55	60	100
250	-	35	55	100
300	-	30	50	100
350	-	25	50	100
400	-	20	50	80
450	-	-	40	60
500	-	-	30	50
550	-	-	30	40
600	-	-	25	35
650	-	-	-	30
700	-	-	-	30
750	-	-	-	30
800	-	-	-	30

Equivalent length for other elements of pipe (m)				
Type of element	**with Ø 50 mm Ø 80 mm**	**with Ø 125 mm**	**with Ø 160 mm**	**with Ø 200 mm**
45° bend	1	1,2	1,7	1,7
87° bend	3	5	7,5	7,5
T joint	3	4	7,5	7,5

PREPARING THE CONDENSATE DRAIN

The condensate produced by the boiler during normal operation must be drained at atmospheric pressure and must conform to any current standards and law applicable.

- install a neutraliser where required by law.

⚠ **Specific pipes for condensing boilers must be used. For installation, follow the instructions provided with the kit.**

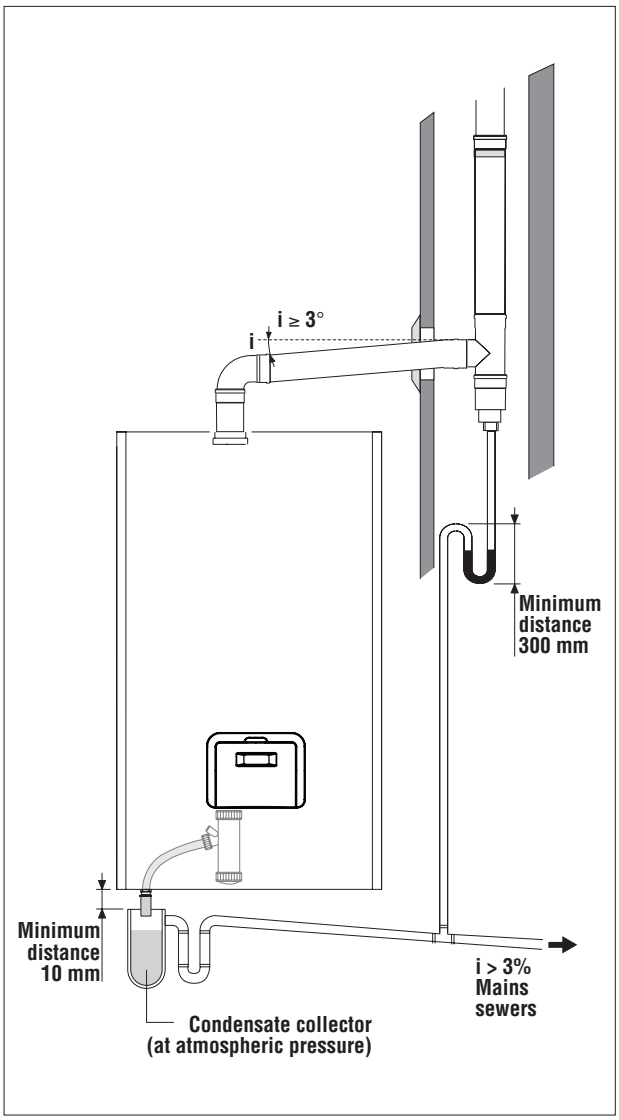

Drain trap along the drain pipe

If the vertical or horizontal section of the drain pipe needs to be extended by more than 4 metres, a drain trap must be installed at the foot of the pipe.
The useful height of the drain trap must be at least 300 mm. The discharge of the drain trap must then be connected to the sewerage system.

ELECTRICAL CONNECTIONS

The **CondexaPRO 50 M** and **100 M** boilers leave the factory completely wired, with the power cable already connected, and only require the connection of the room thermostats, the outside probe and the pumps used, to the corresponding terminals. For the **CondexaPRO 100 S** boiler, only the Bus cable needs to be connected (see the wiring diagram on page 16).

To do this:

- Move the main system switch to "off"

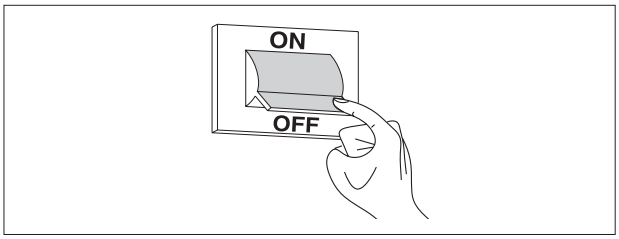

- Unscrew the fastening screws (1) on the front panel (2)

- Pull the base of the panel (2) outwards and then upwards to release it from the frame and then remove it

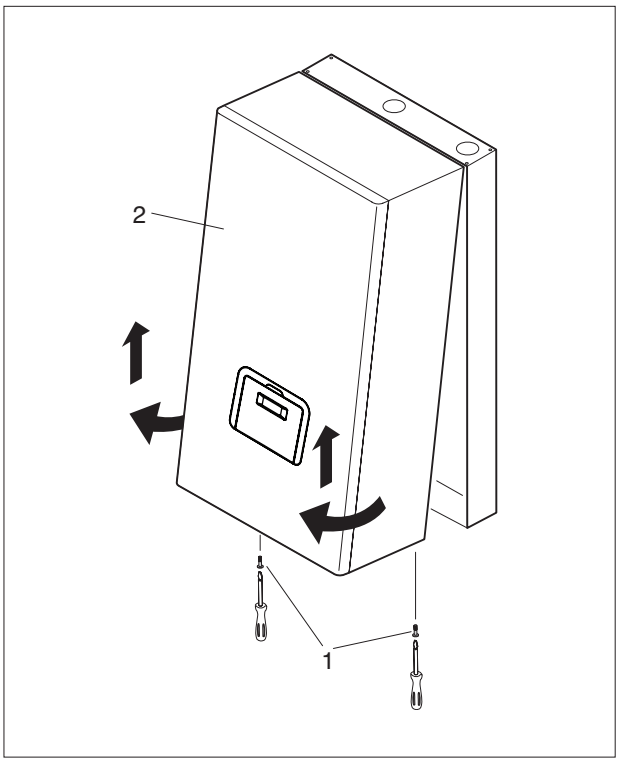

- Turn the control panel (3) and remove the rear cover, taking out the locking screws (4)

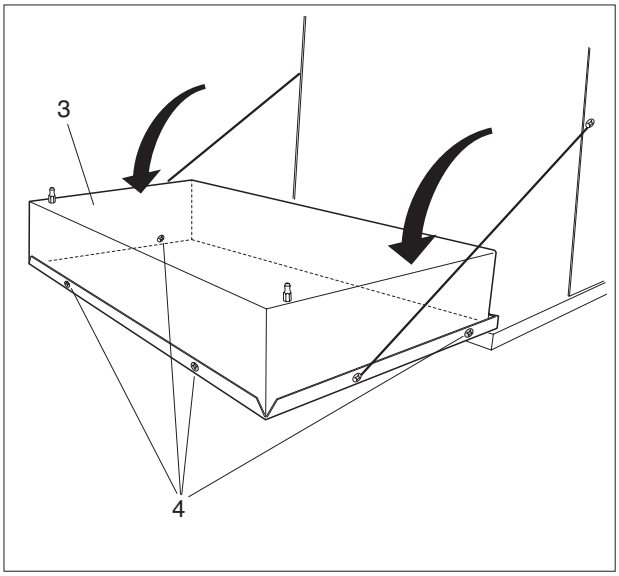

- Identify the terminal block (5) and make the connections, as in the diagram shown below.

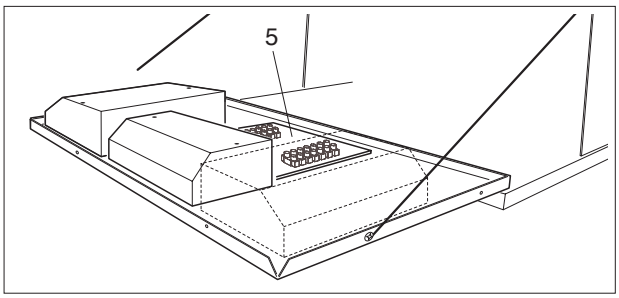

TERMINAL BLOCK INSIDE THE MASTER CONTROL PANEL

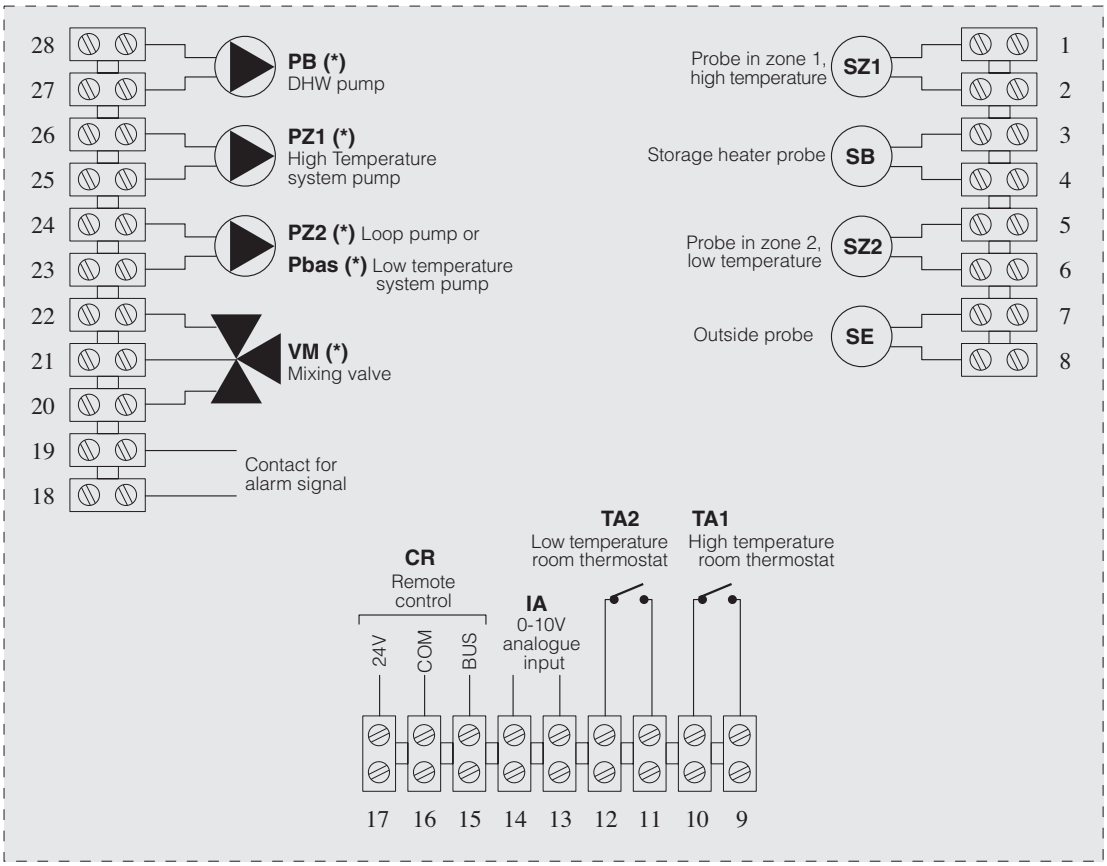

(*) 230V~50Hz

⚠ The following measures are compulsory:

1 - the use of an omnipolar thermal overload switch, mains disconnecting switch, compliant with the CEI-EN standards (minimum contact opening 3 mm);

2 - respect the connection L (Line) - N (Neutral). Leave the earth wire around 2 cm longer than the power wires;

3 - use wires with a cross-section greater than or equal to 1.5 mm^2, complete with pointed end terminals;

4 - refer to the wiring diagrams in this booklet for any operations on the electrical system;

5 - connect the appliance to an effective earth system.

⚠ The pumps should be connected by installing suitable contactors with manual emergency operation.

⛔ The gas and/or water pipes must not be used to earth the appliance.

⛔ The power supply and room thermostat cables must not run near hot surfaces (outlet pipes).

The manufacturer is not liable for any damage due to the failure to earth the appliance and to observe the information provided on the wiring diagrams.

INSTALLING THE OUTSIDE PROBE

The correct positioning of the outside probe is fundamental for the correct operation of the climate control function. The probe must be installed outside of the building being heated, at a height of around 2/3 of the wall facing NORTH or NORTH-WEST, and away from flues, doors, windows and areas exposed to direct sunlight.

Fastening the outside probe to the wall

- Unscrew the cover on the probe protection box, turning it anticlockwise to access the terminal block and the fastening holes
- Trace the fastening points using the protection box as the template
- Remove the box and drill the holes for the 5x25 expansion plugs
- Fasten the box to the wall using the two plugs supplied
- Unscrew the nut on the cable gland, pass a two-wire cable through (cross-section from 0.5 to 1mm^2, not supplied) to connect the probe to terminals 7 and 8 (see the diagram on page 34)
- Connect the two wires on the cable to the terminal block, without needing to identify the polarity
- Tighten the nut on the cable gland and close the cover on the protection box.

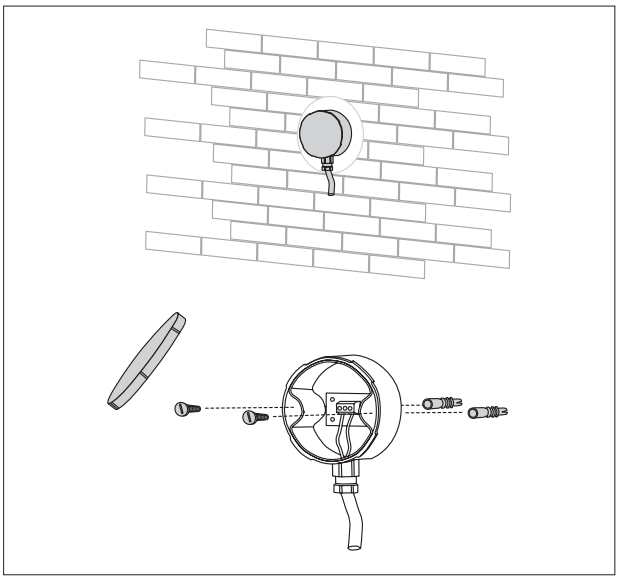

⚠ The probe should be placed on a smooth section of the wall; in the event of exposed brick walls or uneven walls, a smooth contact area should be used.

⚠ The maximum length of the connection between the outside probe and the control panel is 50 m. If connecting cables longer than 50m, check the value read on the board against a real measurement and make any correction required by suitably setting parameter 39.

⚠ The connection cable between the probe and control panel must not have junctions; if required, these must be sealed and adequately protected.

⚠ Any conduits used for the connection cable must be separate from the power cables (230Vac).

⚠ If the outside probe is not connected, set parameters 14 and 22 to "0".

Conversion table valid for all probes

Temperature measured (°C) - Resistance of the probes (Ω).

T (°C)	R (°Ω)	T (°C)	R (°Ω)	T (°C)	R (°Ω)	T (°C)	R (°Ω)	T (°C)	R (°Ω)	T (°C)	R (°Ω)	T (°C)	R (°Ω)
-20	67739	**0**	27279	**20**	12090	**40**	5828	**60**	3021	**80**	1669	**100**	973
-19	64571	**1**	26135	**21**	11634	**41**	5630	**61**	2928	**81**	1622	**101**	948
-18	61568	**2**	25044	**22**	11199	**42**	5440	**62**	2839	**82**	1577	**102**	925
-17	58719	**3**	24004	**23**	10781	**43**	5258	**63**	2753	**83**	1534	**103**	901
-16	56016	**4**	23014	**24**	10382	**44**	5082	**64**	2669	**84**	1491	**104**	879
-15	53452	**5**	22069	**25**	9999	**45**	4913	**65**	2589	**85**	1451	**105**	857
-14	51018	**6**	21168	**26**	9633	**46**	4751	**66**	2512	**86**	1411	**106**	836
-13	48707	**7**	20309	**27**	9281	**47**	4595	**67**	2437	**87**	1373	**107**	815
-12	46513	**8**	19489	**28**	8945	**48**	4444	**68**	2365	**88**	1336	**108**	796
-11	44429	**9**	18706	**29**	8622	**49**	4300	**69**	2296	**89**	1300	**109**	776
-10	42449	**10**	17959	**30**	8313	**50**	4161	**70**	2229	**90**	1266	**110**	757
-9	40568	**11**	17245	**31**	8016	**51**	4026	**71**	2164	**91**	1232		
-8	38780	**12**	16563	**32**	7731	**52**	3897	**72**	2101	**92**	1199		
-7	37079	**13**	15912	**33**	7458	**53**	3773	**73**	2040	**93**	1168		
-6	35463	**14**	15289	**34**	7196	**54**	3653	**74**	1982	**94**	1137		
-5	33925	**15**	14694	**35**	6944	**55**	3538	**75**	1925	**95**	1108		
-4	32461	**16**	14126	**36**	6702	**56**	3426	**76**	1870	**96**	1079		
-3	31069	**17**	13582	**37**	6470	**57**	3319	**77**	1817	**97**	1051		
-2	29743	**18**	13062	**38**	6247	**58**	3216	**78**	1766	**98**	1024		
-1	28481	**19**	12565	**39**	6033	**59**	3116	**79**	1717	**99**	998		

FILLING AND EMPTYING THE SYSTEMS

The **Vokera CondexaPRO** Boiler is not fitted with a filling valve, which must be installed on the system return.

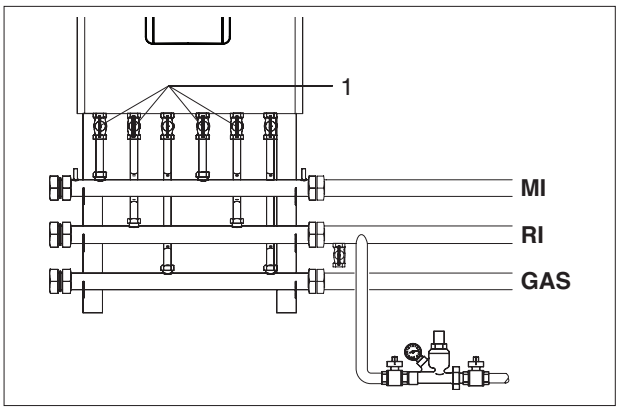

FILLING

- Open the valves (1) installed on the boiler water fittings;

- Open the caps on the automatic vent valve/valves (2) two or three turns;

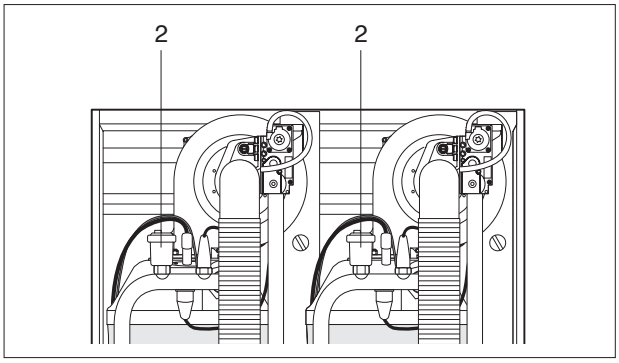

- Open the filling valve on the system until the pressure shown on the pressure gauge is **1,5 bar**;

- Close the filling valve again.

⚠ The air is vented from the **CondexaPRO** boiler automatically through the automatic vent valve/valves installed on the top of the heating units.
Check that the cap on the valve is open.

EMPTYING

Before starting to empty the system, disconnect the power supply by moving the main system switch to "off".

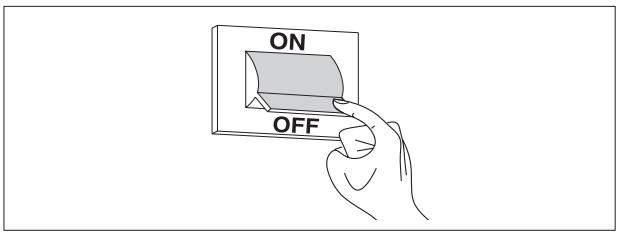

Emptying the BOILER

- Close the valves (1) installed on the boiler water fittings;

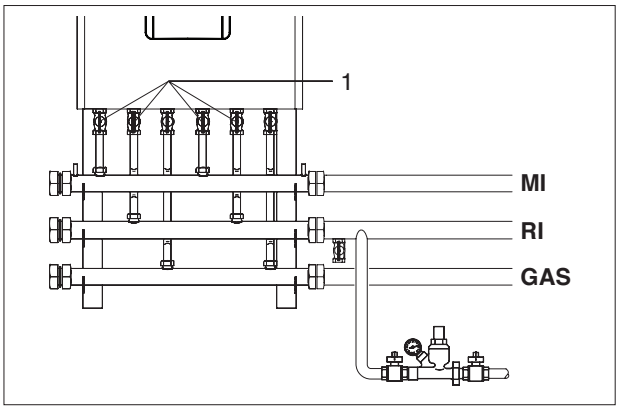

- Connect a plastic hose to the drain cock (4), on each heating unit, and open the cock;

⚠ Before opening the drain cock (4), protect the electrical devices underneath against water spillage.

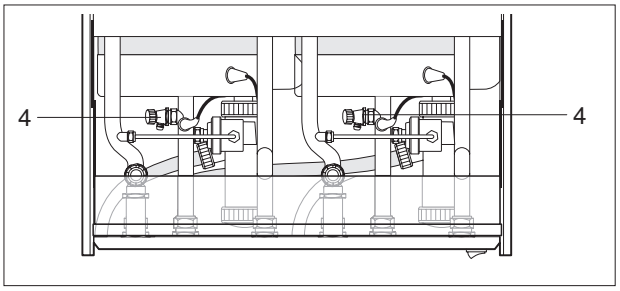

Emptying the SYSTEM

- Check that the valves (1), installed on the water circuit, are open;

- Connect a plastic hose to the drain cock (5), fitted on the system return line, and open the cock.

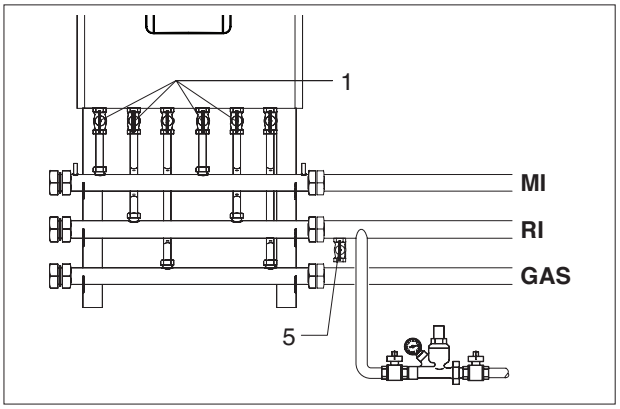

PREPARING FOR FIRST START-UP

Before starting the system and running the functional tests on the **Vokera CondexaPRO** Boiler, check that:

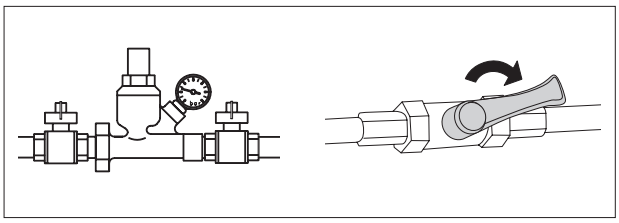

- The fuel valve and valves in the central heating system are open;

- The type of gas and the supply pressure are correct for the boiler;

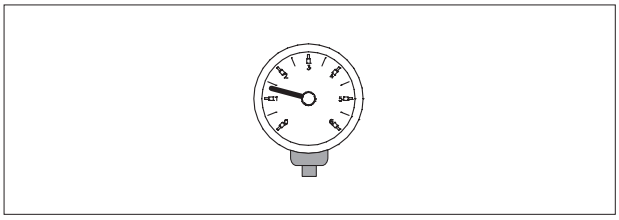

- The system is filled, pressure in the water circuit, when cold, is around **1,5 bar** and the circuit has been vented;

- The system expansion vessel is suitably pre-charged;

- The electrical connections have been performed correctly.

⚠ The pumps should be connected by installing suitable contactors with manual emergency operation.

- Check that the cap on the vent valve/valves is unscrewed;

- The pumps turn freely: loosen the inspection screw and check with a flathead screwdriver that the motor shaft is rotating without impediments.

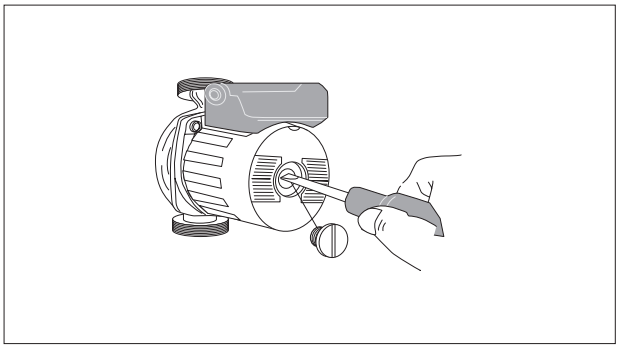

⚠ Before loosening or removing the seal cap on the pump, protect the electrical devices underneath against water spillage.

- The flues have been properly made and installed.

STARTING FOR THE FIRST TIME

- Move the main system switch to "on";

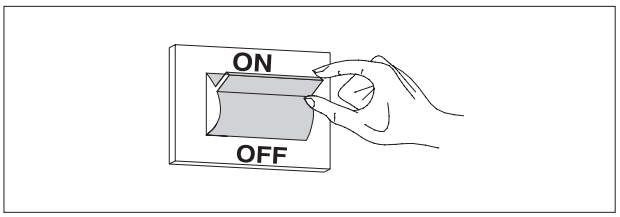

- Move the main switch (1) on the boiler and the switches (2) on each heating unit to "on".

  The green electrical power indicators (3) and (4) light up. The boiler performs a self-diagnosis cycle, after which it will enter DISPLAY mode.

  The display (5) shows the status of the system and the temperature measured by the probe in the "high temperature" circuit (see Display mode on page 20).

  If there are more than two boilers installed, configure the addresses from the third boiler on. To do this, see the paragraph "Setting the addresses for cascading configurations" on page 54).

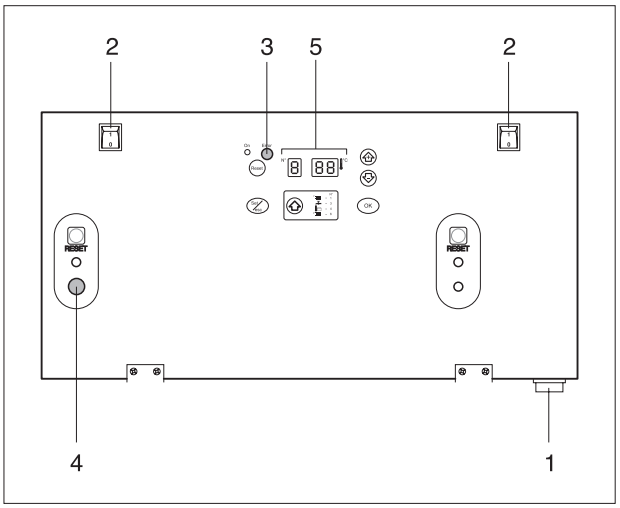

- Set the room thermostats in the high and low temperature zone to the desired temperature (20°C) or if the systems are fitted with a timer-thermostat or timer, check that this is on and set (20°C).

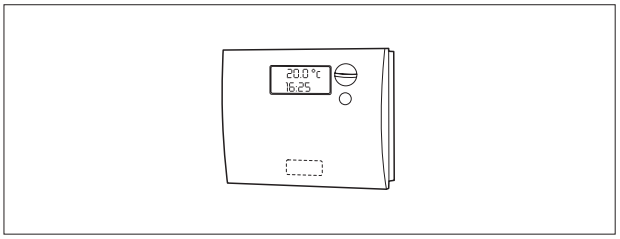

- Press the "⬆" button: the maximum temperature of the boiler will be displayed, that is, the maximum temperature in the high temperature circuit, preceded by the symbol "1".

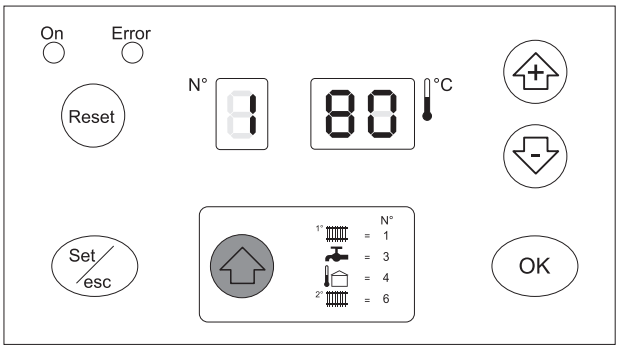

- Press "**Set/esc**": the corresponding set point will be displayed and the two digits on the right will flash. To change the value, press "**+**" or "**-**".
  To confirm press "**OK**".

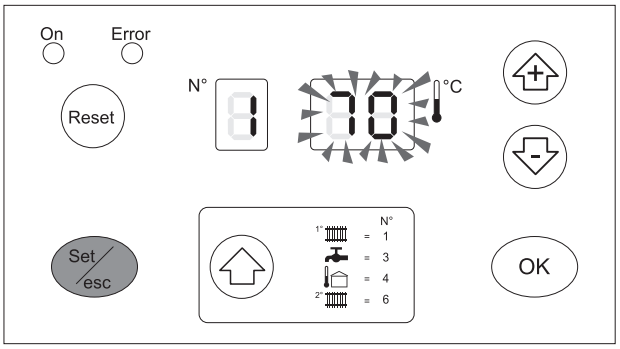

- Press the "⬆" button four times: the maximum temperature in the low temperature circuit will be displayed, preceded by the symbol "6".

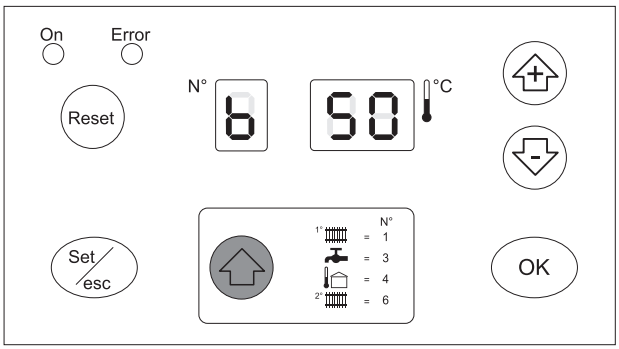

- Press "**Set/esc**": the corresponding set point will be displayed and the two digits on the right will flash. To change the value, press "**+**" or "**-**".
  To confirm press "**OK**".

⚠ For low temperature systems, select a temperature between 20°C and 45°C.
When setting the system as "Low temperature", the maximum outlet temperature will be limited at 50°C (Par. 23=T_CH_Low_limit).

⚠ Changing the outlet temperature modifies the climate control curve (see the paragraph "Setting the temperature controller"). These settings must only be performed by **Vokera Ltd** or a suitably qualified person.

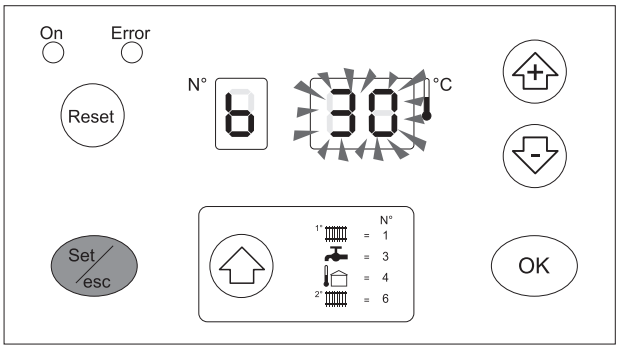

If the boiler is connected to a storage heater, set parameter 6 (pre-set to 0=no DHW service).
To do this, access "Installer programming" mode and set parameter 6 to:

2 = for storage heater with probe
6 = for storage heater with thermostat.

In addition, set parameter 9 (DHW_Priority) to 2 for absolute priority.
If the storage heater is fitted with an NTC probe, the desired temperature can be set on the display, from 10°C to 50°C.
If the storage heater is fitted with a thermostat, the desired temperature should be set directly on the storage heater, while parameter 3 must be left at 50°C.

- Press "⬆" button twice: the DHW temperature will be displayed, preceded by the symbol "3".

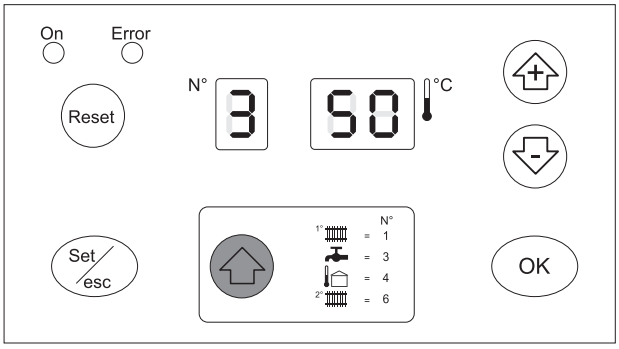

- Press "**Set/esc**": the corresponding set point will be displayed and the two digits on the right will flash. To change the value, press "**+**" or "**-**".
  To confirm press "**OK**".

  The boiler will start in DHW mode, until the demand is satisfied.

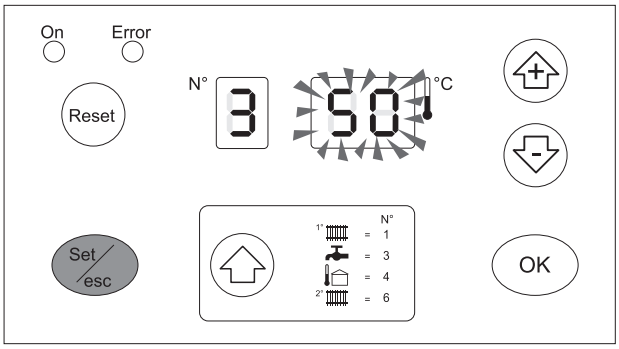

When the boiler is in Standby, the display on the Master unit is in Readout mode and the three digits show the number "1", followed by the value of the outlet temperature. The green LED (ref. 12 on page 18) flashes.

See the paragraph on "DISPLAY MODE", page 20, for details on the various information displayed by the system.

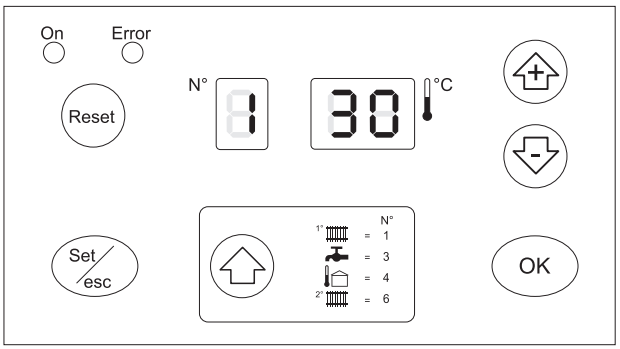

If ignition or operating faults occur on any heating unit, the display on the Master boiler starts flashing and the red LED (5) comes on.

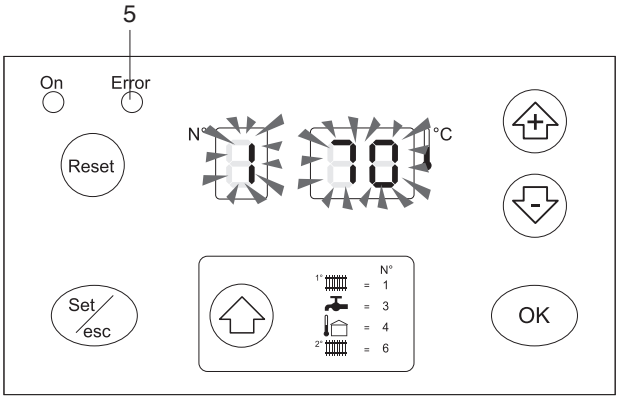

There are two possible types of errors:

- Type A errors, which can only be deactivated by pressing RESET;

- Type E errors, which are deactivated when the causes are no longer present (see ERROR MODE on page 24 and the "Fault codes" paragraph on page 56).

CHECKS DURING AND AFTER FIRST START-UP

When ignition is complete, check that the **CondexaPRO** boiler correctly:

- Starts and stops, closing the contacts on the zone thermostats;

- Displays the DHW temperature (only if the storage heater is fitted) and central heating temperature, pressing the "⬆" button twice;
  Check, if the storage heater is fitted, that parameter "6" is set correctly:

  2 = storage heater with probe
  6 = storage heater with thermostat

  and check that operation is correct, by opening a hot water tap.

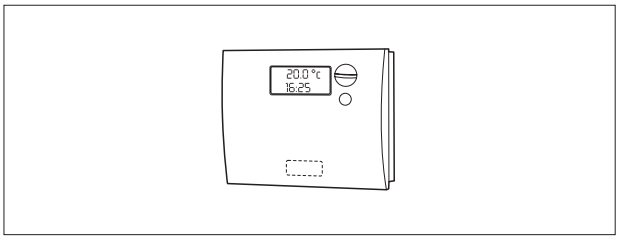

Check the complete shutdown of the boiler by moving the main system switch to "off".

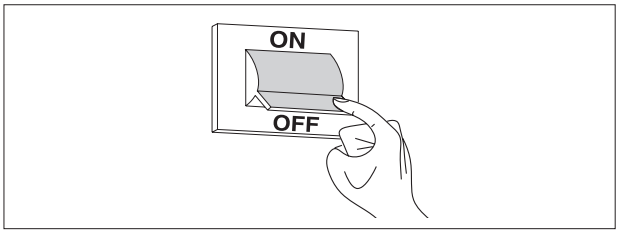

After a few minutes of continuous operation controlled by the room thermostat, the adhesives and the processing residues will have evaporated, and the following checks can be completed:

- **check the gas supply pressure;**
- **check combustion,**

CHECKING THE GAS SUPPLY PRESSURE

- Move the main system switch to "off";

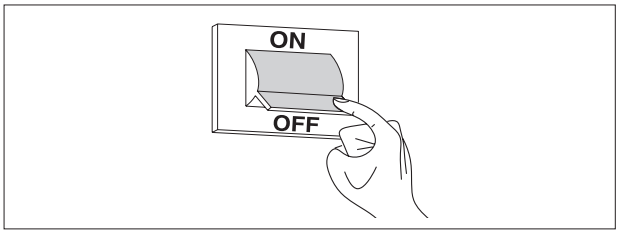

- Unscrew the fastening screws (1) on the front panel (2);
- Pull the base of the panel (2) outwards and then upwards to release it from the frame and then remove it;

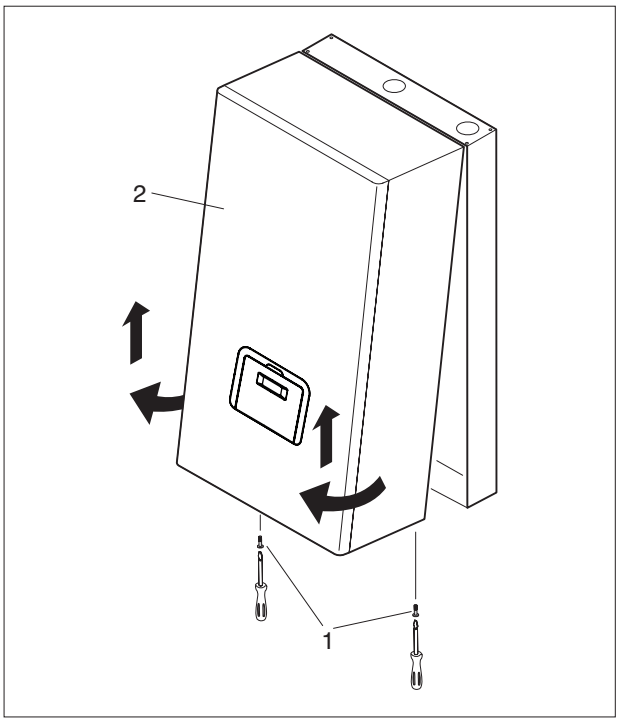

- Unscrew the screw on the pressure test point (3), located upstream of the gas valve, around two turns, and connect a pressure gauge;

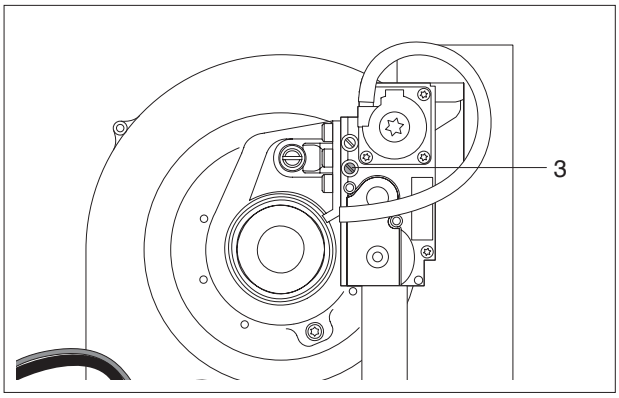

- Power-up the boiler by moving the main system switch and the main switch/switches on the appliance to "on".

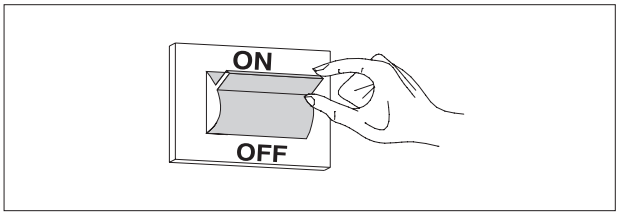

In TEST mode, a high temperature heating demand at maximum output can be generated.

To do this:

- Press the “**Set/esc**” and “**+**” buttons together for 5 seconds;

- Start the boiler by adjusting the room thermostat.
  The boiler will operate at maximum output showing "H" on the display, followed by the outlet temperature (chimney sweep function);

- Check that with the burner on at maximum output the gas pressure is the rated supply pressure, as shown in the table to the side;

- Adjust the thermostat so as to stop the boiler;

- Press “**OK**” to exit TEST mode;

- Disconnect the pressure gauge and tighten the screw on the pressure test point (3) upstream of the gas valve.

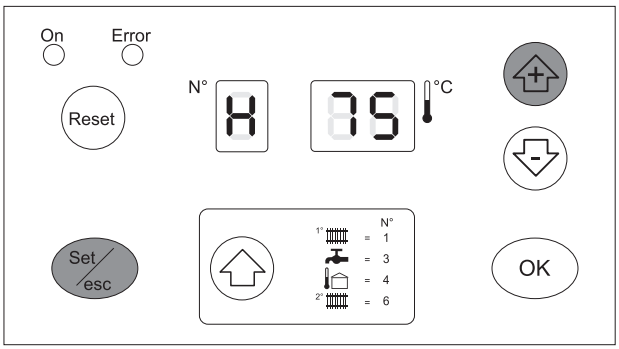

DESCRIPTION	G20	G30	G31	
Wobbe index	45,7	80,6	70,7	MJ/m^3
Rated supply pressure	20	28-30	37	mbar

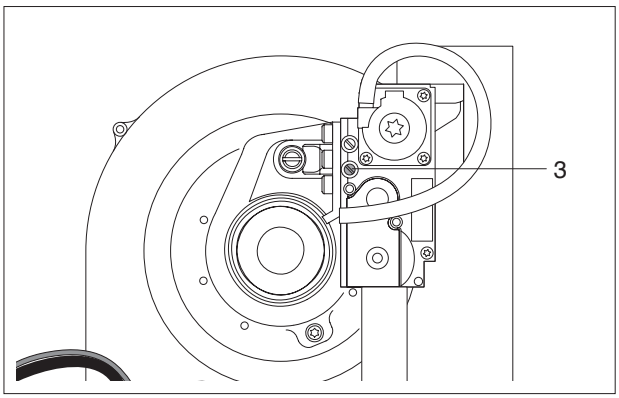

CHECKING COMBUSTION

- Power-up the boiler by moving the main system switch and the main switch/switches on the appliance to "on";

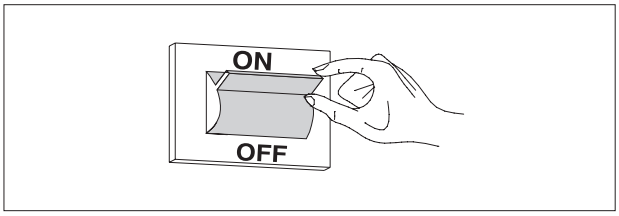

In TEST mode, a high temperature heating demand at maximum output can be generated.

To do this:

- Press the “**Set/esc**” and “**+**” buttons together for 5 seconds;

- Start the boiler by adjusting the room thermostat.
  The boiler will operate at maximum output showing "H" on the display, followed by the outlet temperature (chimney sweep function).

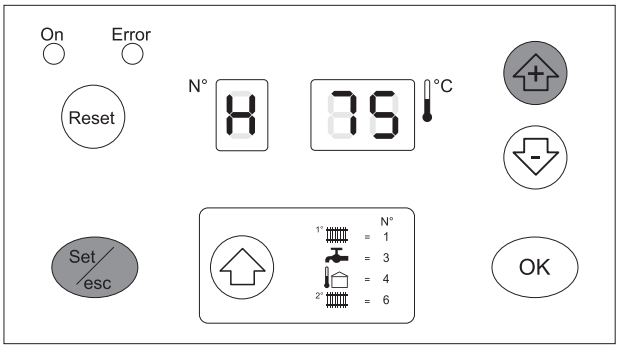

- Combustion can be checked by unscrewing the cap (4) and inserting the analyser probe in the available position;

- Once having completed the check, stop the chimney sweep function by pressing “**OK**”;

- Adjust the thermostat so as to stop the boiler;

- Remove the analyser probe and carefully retighten the cap (4);

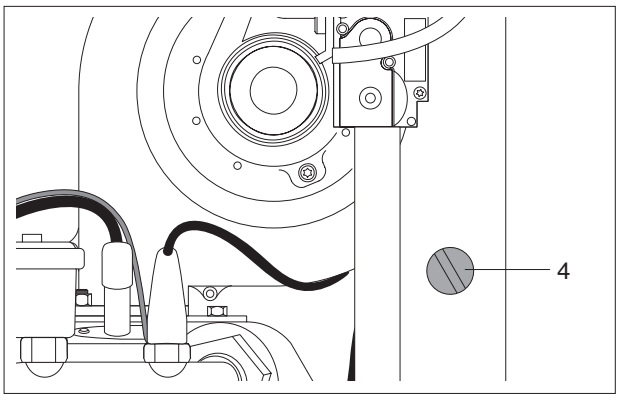

FAN SPEED

The fan speed is controlled automatically based on the type of gas and the length of the flue (L).
This information is managed by parameter 36.

To change the settings:

- Enter "INSTALLER PROGRAMMING MODE" following the procedure described on page 23, and set parameter 36 to:

  01 = natural gas and L<15 m
  02 = natural gas and L>15 m
  03 = LPG and L<15 m
  04 = LPG and L>15 m.

The **CondexaPRO** boilers are supplied for operation on G20 (natural gas), with a flue L<15m (parameter 36=01).

Once the checks are complete, replace the front panel and secure it using the same screws.

⚠ All checks must be performed by a suitably qualified person.

SETTING THE FUNCTIONAL PARAMETERS

The functions of the central heating high temperature and low temperature circuits and the DHW circuits can be set based on the system requirements, by setting the functional parameters.

The first three parameters are accessible at a user level, while the remaining parameters require the password to be entered ("22", see page 23).

To access the user parameters, press the "⬆" button, after which the following values will be displayed:

- Outlet temperature in the high temperature circuit T1 — 1 80
- Temperature in the DHW circuit T3 — 3 50
- Outlet temperature in the low temperature circuit T6 — 6 50

To change the corresponding set points:
- Press "**Set/esc**", the corresponding value will be displayed and the two digits on the right will flash.
- Press "**+/-**" until reaching the desired value. Press "**OK**" to save the new value. The value displayed will stop flashing and will be valid after 3 seconds.

For a detailed description of all the parameters and the default values see page 58.

SETTING THE CENTRAL HEATING PARAMETERS

The following functions can be set for central heating:

1 Setpoint_T_CH_High

Set point in the high temperature circuit (parameter 1)
If the operating mode is set to "fixed set point" (par. 14=CH_type_high=0), this is the objective temperature.
If the operating mode is set to "climate control" (par. 14=1), this is the maximum objective temperature for the minimum outside temperature (T_out_min=par. 37, pre-set to 0°C).
Parameter 18 (T_CH_high_foot, pre-set to 50°C) defines the minimum set point for the maximum outside temperature (T_out_max, pre-set to 18°C).

Pre-set to 70°C with upper limit set by par. 17 (T_CH_high_limit, pre-set to 80°C).

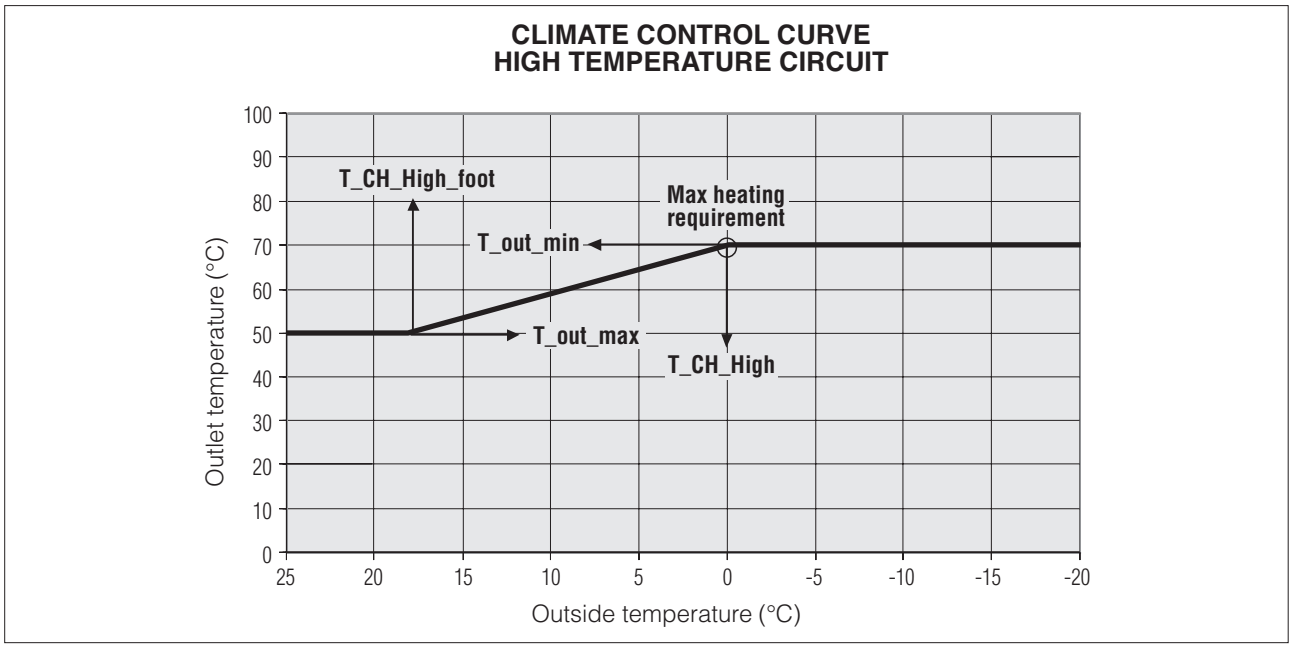

2 Setpoint_T_CH_Low

Set point in the low temperature circuit (parameter 3)

If the operating mode is set to "fixed set point" (par. 22=CH_type_low=0), this is the objective temperature.
If the operating mode is set to "climate control" (par. 22=1), this is the maximum objective temperature for the minimum outside temperature (T_out_min=par. 37, pre-set to 0°C).
Parameter 24 (T_CH_low_foot, pre-set to 25°C) defines the minimum set point for the maximum outside temperature (T_out_max, pre-set to 18°C).

Pre-set to 40°C with upper limit set by par. 23 (T_CH_Low_limit, pre-set to 50°C).

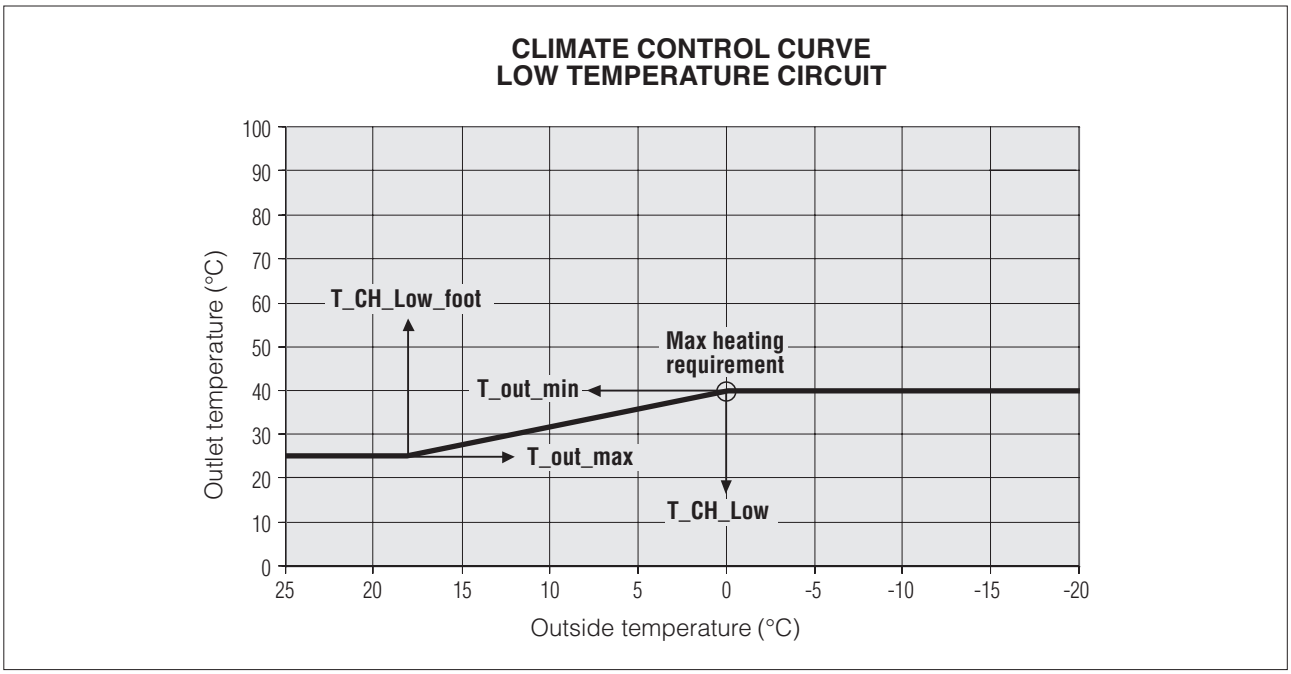

Consequently, each circuit can operate with a fixed set point or using a set climate control curve.

3 CH_Priority

Central heating priority (parameter 16)

If this is set to 0 the system works without central heating priority, that is, with the high temperature and low temperature circuit served in parallel.
If set to 1, the demand from the low temperature circuit is ignored and the corresponding pump remains off.
The demand from the low temperature circuit is only accepted when the high temperature circuit is off.
Vice-versa, if set to 2 the low temperature circuit has priority.

Pre-set to 0.

SETTING THE DOMESTIC HOT WATER PARAMETERS

The following functions can be set for the domestic hot water circuit:

1 Setpoint_DHW

Domestic hot water set point (parameter 2)
This is the temperature value for the production of domestic hot water.
The maximum limit is set by par. 8 (T_DHW_limit, pre-set to 60°C).

Pre-set to 50°C.

2 DHW_Type

Type of storage heater (parameter 6)

0 = No DHW service
1 = Rapid heat exchanger with probe
2 = Storage heater with probe
6 = Storage heater with thermostat

For the storage heater with thermostat, if the input is a closed contact, the domestic hot water demand is activated, if it is an open contact the demand is no longer present.

Pre-set to 0.

3 DHW_Priority

Domestic hot water priority (parameter 9)

0 = Sliding priority A
The purpose of the sliding priority A function is to allow the system to also serve the central heating function when the heating demand is low.
The system responds to the heating demand if:

(Setpoint_Ch - 50°C) < Manifold temp. < (Setpoint_Ch + 1°C)

Setpoint_Ch = Set point in the high or low temperature circuit, according to the demand.

1 = Sliding priority B
The purpose of the sliding priority B function is to ensure that the system does not stop the central heating service for too long.
The system responds to the heating demand if:

(Setpoint_Dhw+T_Tank_extra) - 50°C < Manifold temp. < (Setpoint_Dhw+T_Tank_extra) + 1°C

T_tank_extra = Par. 10 = pre-set to 30°C.

2 = Absolute priority (DHW service only)

Pre-set to 0.

1 Attenuation_High

Attenuation function for the HIGH TEMPERATURE circuit (parameter 21)

Two cases are possible:
- Operation with fixed set point, Par. 14=0
- Operation with climate control Par. 14=1.

OPERATION WITH FIXED SET POINT, PAR. 14=0

With attenuation in the high temperature circuit disabled, Par21=0, when the thermostat in the high temperature circuit closes, the heating demand is signalled. When opening, the system stops.

The Master controller starts the pump in the high temperature circuit PZ1 and the loop pump PZ3, if the parameter for the third pump is set to 0 (Par. 34=0), otherwise the third pump remains off.

The set point for the high temperature circuit can be set on the Master controller, Setpoint_T_CH_High = Par. 1, pre-set to 70°C, in the range from 10°C to T_CH_high_limit=Par 17, in turn pre-set to 80°C.
The set point used will be the value set for parameter 1.

The burner is on when:
Manifold Temperature <=Set point – Start hysteresis.
The start hysteresis can be set, CH_High_mod_hyst_on = Par. 19, pre-set to 7°C, between 0 and 20°C.
The Master controller converts the heating demand into an output requirement for each slave controller.

The burners are off when:
Manifold Temperature >=Set point + Stop hysteresis.
The stop hysteresis can be set (CH_High_mod_Hyst_off=Par. 20, pre-set to 3, between 0 and 20°C).

When the attenuation in the high temperature circuit parameter is enabled, Par. 21≠0, the contact on the high temperature thermostat is ignored, and a demand for heat in the high temperature circuit is present when:
Manifold Temperature <=Set point – Start hysteresis

The demand for heat stops when:
Manifold Temperature >=Set point + Stop hysteresis.
The set point in this case coincides with the value set for parameter 1 (Setpoint_T_CH_High), if the contact of the high temperature thermostat is closed, while it is calculated as the value set for parameter 1 minus the attenuation (Setpoint_T_CH_High-Attenuation_high) if the contact is open.

OPERATION WITH CLIMATE CONTROL, PAR. 14=1

If the attenuation in the high temperature circuit parameter is equal to 0, attenuation_high=Par. 21=0, the behaviour is the same as in the previous paragraph, except the set point is calculated according to the outside temperature.

If the outside temperature = T out_min=Par. 37, pre-set to 0°C, then set point =setpoint_T_Ch_high
If the outside temperature = T out_max=Par. 38, pre-set to 18°C, then set point = T_CH_high_ foot=Par. 18, preset to 50°C.

Between the two outside temperature values, the set point is calculated linearly.

Pre-set to 0.

2 Attenuation_Low

Attenuation function for the LOW TEMPERATURE circuit (parameter 25).

This paragraph is similar to the previous one, however in this case referred to the low temperature circuit.

Two cases are possible:
- Operation with fixed set point, Par. 22=0
- Operation with climate control Par. 22=1.

OPERATION WITH FIXED SET POINT, PAR. 22=0

With attenuation in the low temperature circuit disabled, Par. 25=0, when the thermostat in the low temperature circuit closes, the heating demand is signalled. When opening, the system stops.
The Master controller starts the pump in the low temperature circuit PZ3.
The set point for the low temperature circuit can be set on the Master controller, Setpoint_T_CH_low = Par. 3, pre-set to 40°C in the range from 10°C to T_CH_Low_limit=Par. 23, in turn pre-set to 50°C.
The set point used will be the value set for parameter 3.

The burner is on when:
Manifold Temperature <=Set point – Start hysteresis.
The start hysteresis can be set, CH_Low_mod_hyst_on = Par. 26, pre-set to 5°C, between 0 and 20°C.
The Master controller converts the heating demand into an output requirement for each slave controller.

The burners are off when:
Manifold Temperature >=Set point + Stop hysteresis..
The stop hysteresis can be set (CH_Low_mod_Hyst_off=Par. 27, pre-set to 3, between 0 and 20°C).

When the attenuation in the low temperature circuit parameter is enabled, Par. 25≠0, the contact on the low temperature thermostat is ignored, and a demand for heat in the high temperature circuit is present when:
Manifold Temperature <=Set point – Start hysteresis

The demand for heat stops when:
Manifold Temperature >=Set point + Stop hysteresis.
The set point in this case coincides with the value set for parameter 3 (Setpoint_t_ch_low) if the contact of the low temperature thermostat is closed, while it is calculated as the value set for parameter 3 minus the attenuation (Setpoint_t_ch_low-Attenuation_low) if the contact is open.

OPERATION WITH CLIMATE CONTROL, PAR. 22=1

If the attenuation in the low temperature circuit parameter is equal to 0, attenuation_low=Par. 25=0, behaviour is the same as in the previous paragraph, except the set point is calculated according to the outside temperature.

If the outside temperature = T out_min=Par. 37, pre-set to 0°C, then set point =setpoint_T_Ch_low.
If the outside temperature = T out_max=Par. 38, pre-set to 18°C, then set point = T_ch_low_foot=Par. 24, pre-set to 50°C.

Between the two outside temperature values, the set point is calculated linearly.

Pre-set to 0.

3 T_out_correct

Outside temperature correction (parameter 39)

Normally the value displayed is the value read by the micro-controller, plus or minus a correction value (T displayed = T read by the probe +/- correction).
The outside temperature value read can be corrected by changing the value of parameter 39, (the limit allowed for the correction is +/- 30 °C). In this phase, the use of a reference thermometer is suggested.

Pre-set to 0.

4 T4_frost_protection

Frost protection (parameter 35)

The electronic controller features a frost protection function that is also active in standby. The frost protection function has two levels, the first that starts the pump, and the second that starts the pump and the burner.

If the Manifold Temperature ≤5°C, the pump in the high temperature circuit and the loop pump are started, or, when CH_type=1 and the outside probe is connected, if the Outside Temperature ≤3°C (par. 35), the pump in the high temperature circuit and the loop pump are started.

If after 10 minutes the Manifold Temperature ≤5°C, a burner is started at maximum output, until the Manifold Temperature ≥20°C.

If after 10 minutes the Manifold Temperature ≥5°C but, when CH_type=1 (Par. 14 or 22) and the outside probe is connected, the Outside Temperature ≤3°C (par. 35), the pump continues operating until the Outside Temperature ≥3°C.

Pre-set to 3.

5 Power_control_mode

Cascading management (parameter 33)

To manage the output delivered by the system, two cascading strategies are available. In both cases, the Master controller can only start a new burner when another is already on.
If the Master controller needs to increase the number of burners on, it first checks that the subsequent burner can be started: no error is present and temperature of the boiler is less than the maximum.
Otherwise, it checks another burner. If no burner is available, the master decreases the number of burners to be started.

MODE: MINIMUM NUMBER OF BURNERS ON (PAR. 33=0)

The output of the system is modulated by a PID control algorithm, where the value controlled is the temperature in the manifold, and the set point refers to the active circuit (set point in the high or low temperature circuit, or DHW set point). The PID control directly manages the last 2 burners started, while the previous burners operate at maximum output.

If the Manifold Temperature < set point – 5°C, the next burner is started, and both are managed by the PID control algorithm.
The Master controller waits 30 seconds, and then if the Manifold Temperature < set point - 5°C, another burner is started.
The first burner works at maximum output, while the other two are managed by the PID control algorithm.

If the Manifold Temperature > set point + 2°C, the last burner is stopped, the other two most recently started burners are managed by the PID control algorithm, while the others work at maximum output. The Master controller waits 30 seconds before checking the situation again.

MODE: MAXIMUM NUMBER OF BURNERS ON (PAR.33=1)

All the burners are controlled by the same PID control algorithm, where the value controlled is the temperature in the manifold, and the set point refers to the active circuit (set point in the high or low temperature circuit, or DHW set point).

If the Manifold Temperature < set point – 5°C, the next burner is started.
The Master controller waits 30 seconds, and then
if the Manifold Temperature < set point - 5°C, another burner is started.
If the Manifold Temperature > set point + 2°C the last burner is stopped. The Master controller waits 30 seconds before checking the situation again.

ADDITIONAL CASCADING MANAGEMENT FUNCTIONS

Rotation of burner ignition sequence

When Master controller is switched on, the burner with address 1 is the first in the sequence. After 24 hours, the burner with address 2 becomes the first burner, while the burner with address 1 becomes the last in the sequence.

Limitation of starts/stops

In both cascading strategies, after each start or stop, a minimum time must expire before the Master can start or stop any of the burners.

Rapid start/stop

In both modes a function is available for rapidly reaching stable operating conditions and shutting down.
If the Manifold Temperature < set point - 70°C the burners are started at 2 second intervals.
If the Manifold Temperature > set point + 4°C the burners are stopped at 2 second intervals.

Low load

The low load function prevents the burners from stating and stopping when there is a low heating demand. The conditions for the activation of the Low Load function are checked on every Slave board, which sends the request to enable the function to the Master.
During normal operation, the set point in the active circuit (set point in the high or low temperature circuit, or DHW set point) is sent to the Slave boards, and the temperature of the heating unit is checked by each Slave board:
if the Boiler temperature > Set point – 8°C or
the Boiler temperature > 85°C - 8°C, the signal to start the burner is disabled.
When the Slave board reads a boiler temperature greater than 85°C three times when the burner is on, the heating unit is stopped and the start-up procedure is enabled again.

Emergency function

In the event of faults on the Master board, there are two was of manually controlling the Slave boards:

- By eBUS and manifold probe
  Disconnect the power supply from the system, unplug the BUS. Set the address 000000 on all the Slave boards (J10 and J17 OFF). Connect a power supply between 21 and 28 Vac to the BUS.
  If the Manifold Temperature < Emergency Temp. (Par.40; pre-set to 70°C; settable between 10 and 80°C) all the burners operate at maximum output.
  If the Manifold Temperature > Emergency Temp. + 5°C all the burners are stopped;

- By PC
  Disconnect the power supply from the system, unplug the BUS and connect the PC interface. The output of the burners can be sent directly to the Slave boards using the PC.

⚠ In the event of faults, contact **Vokera Ltd** or a suitably qualified person.

Managing the heating demand in the high temperature circuit by analogue input (Par. 14=2 or 3)
The room thermostat in the high temperature circuit is ignored for the heating demand, and the input signal is used to calculate the output or the system set point.
There is just one analogue input (see terminals 13-14 on the wiring diagram on page 34) on the Master board and this can also be used for the low temperature circuit (Par.22). The analogue input cannot be used for both the circuits.

ANALOGUE INPUT FOR HEAT OUTPUT, PAR. 14=2 (PAR. 22=2 FOR LOW TEMPERATURE CIRCUITS)
The demand for the high temperature (low temperature) circuit is made according to the following rules:

0-2Vdc: no demand from the high temperature (low temperature) circuit

2-9Vdc: 2-9Vdc: the demand for heat is converted into an output demand for each Slave. An input of 2V corresponds to minimum output, 9V to maximum output (Par.15). Between 2V and 9V the output is calculated linearly. The hysteresis for the end of the demand is 0.2V and therefore the demand is active above 2V and ends below 1.8V.
The burner starts when:
Outlet Temp. ≤ Setpoint_Ch_high (Par.1) – Ch_high_mod_hist_on (Par.19)
(Outlet Temp. ≤ Setpoint_Ch_low (Par.3) – Ch_low_mod_hist_on (Par.26))
The burner stops when:
Outlet Temp. > Setpoint_Ch_high (Par.1) + Ch_high_hist_off (Par.20)
(Outlet Temp. > Setpoint_Ch_low (Par.3) + Ch_low_hist_off (Par.27))

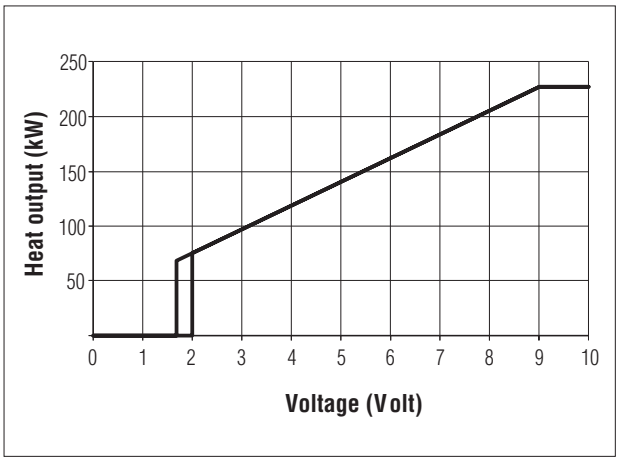

ANALOGUE INPUT FOR TEMPERATURE, PAR. 14=3 (PAR. 22=3 FOR LOW TEMPERATURE CIRCUITS)
The demand for the high temperature (low temperature) circuit is made according to the following rules:

0-2Vdc: no demand from the high temperature (low temperature) circuit

2-9Vdc: the demand for heat is converted into an output requirement for each Slave, by the PID_CH_high (PID_CH_low) algorithm. 2V corresponds to a set point of T_Ch_high_foot, Par. 18 (T_Ch_low_foot, Par. 24), 9V to a set point of Setpoint_Ch_high, Par.1 (Setpoint_Ch_low, Par.3). Between 2V and 9V the set point is calculated linearly. The hysteresis for the end of the demand is 0.2V and therefore the demand is active above 2V and ends below 1.8V.
The burner starts when:
Outlet Temp. ≤ Setpoint_ch_high (Par. 1) – Ch_high_hist_on (Par 19)
(Outlet Temp. ≤ Setpoint_ch_low (Par. 3) – Ch_low_mod_hist_on (Par.26))
The burner stops when:
Outlet Temp. > Setpoint_ch_high (Par. 1) + Ch_high_hist_off (Par. 20)
(Outlet Temp. > Setpoint_ch_low (Par. 3) + Ch_low_hist_off (Par. 27)).

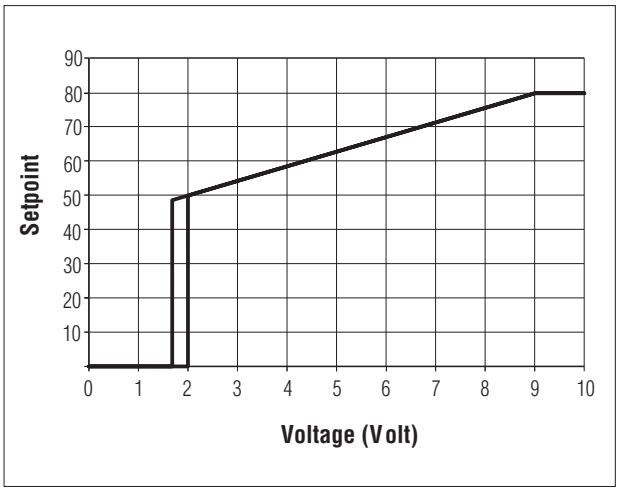

MANAGEMENT OF THE MIXING VALVE

The mixing valve is controlled by the following parameters:

Mix_valve_step_open_time: Par.28 pre-set to 5s
Mix_valve_step_close_time: Par.29 pre-set to 7s
Mix_valve_interval_time: Par.30 pre-set to 5s
Mix_valve_p_hyst: Par.31 pre-set to 2°C
Mix_valve_still_hyst: Par.32 pre-set to 2°C

Before opening or closing, the valve waits the time set for Par.30.

It opens if:
T_low inlet temperature < Setpoint_low – Par32

It closes if:
T_ low inlet temperature > Setpoint_low + Par32

Within the interval, the valve remains in the current position.

If:
T_ low inlet temperature < Setpoint_low – Par31 it opens for a time equal to half of the value set for Par. 28

If:
T_ low inlet temperature > Setpoint_low + Par31 it closes for a time equal to half of the value set for Par. 29.

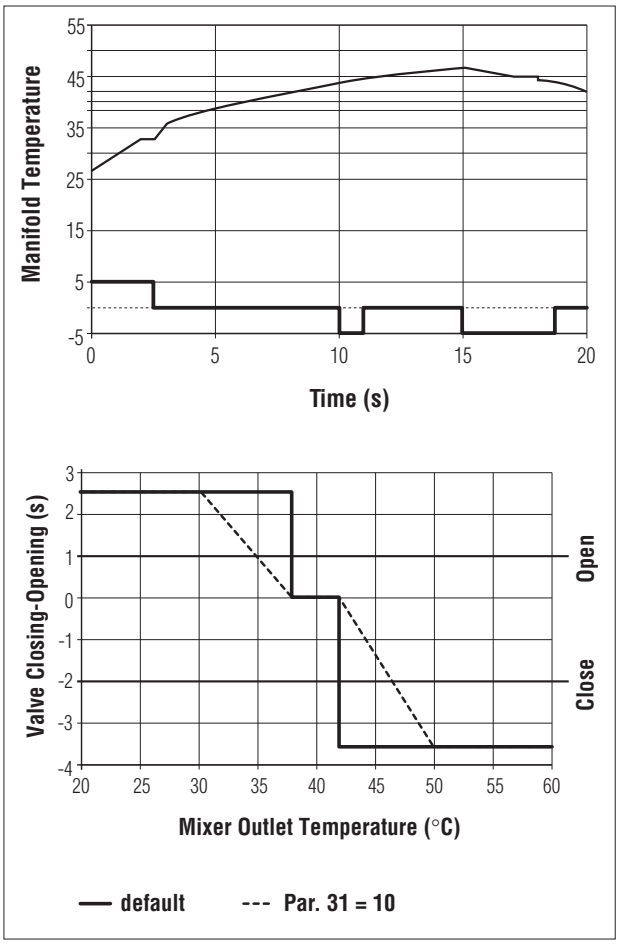

Safety functions on the Slave boards

When the Outlet Temperature > 90°C for 5s, the Slave board shuts down (no. 46).
When the Return Temperature > 80°C for 5s, the Slave board shuts down (no. 47).
When the Flue Gas Temperature > 80°C for 5s, the Slave board shuts down (no. 48) and the fan operates for 10 minutes at maximum speed.

The Slave board can protect the primary heat exchanger against insufficient water circulation by means of a flow switch and by monitoring the difference between the flow and return temperatures.

The control on the DT uses a parameter, DT_max (pre-set to 35°C) and limits the output of the burner as follows:

if DT_max -5°C > DT > DT max – 10°C	burner modulation
if DT_max > DT > DT_max –5°C	burner at minimum
if D_T > D_T_max	burner off.

A sensor is also provided to shut down the heat exchanger if pressure in the combustion unit drops below 0.5 bar.

SETTING THE ADDRESSES FOR CASCADING CONFIGURATIONS

The microswitches on the slave boards are factory-set so as to interface a master boiler (50 M or 100 M) to a slave boiler (100 S). If further slave boilers need to be connected, only the microswitches on these boilers will need to be reset.

Accessing the slave boards

- Move the main system switch to "off"
- Access the slave boards inside the boiler control panel (see the steps described on page 65)
- Follow the address setting procedure described below, and then connect the boilers using the special bus cable (see the wiring diagrams starting from page 14).

Setting the ADDRESSES

Each slave board (one for each heat generator) must be configured so as to be recognised in the right sequence by the master board.

The slave generators should first of all be divided into blocks; the system can manage up to 15 blocks of four slave generators each.

For example, if 5 slave generators are connected to a master, there are two blocks: the first made up of four slave generators and the second of one slave generator.

Consequently, the addresses should be set as follows:

- Identify the block of four that the slave generator being configured belongs to (for example block 1, 2, ……, up to block15)
- Identify the position of the slave generator inside each block (e.g. position 1, 2, 3 or 4).

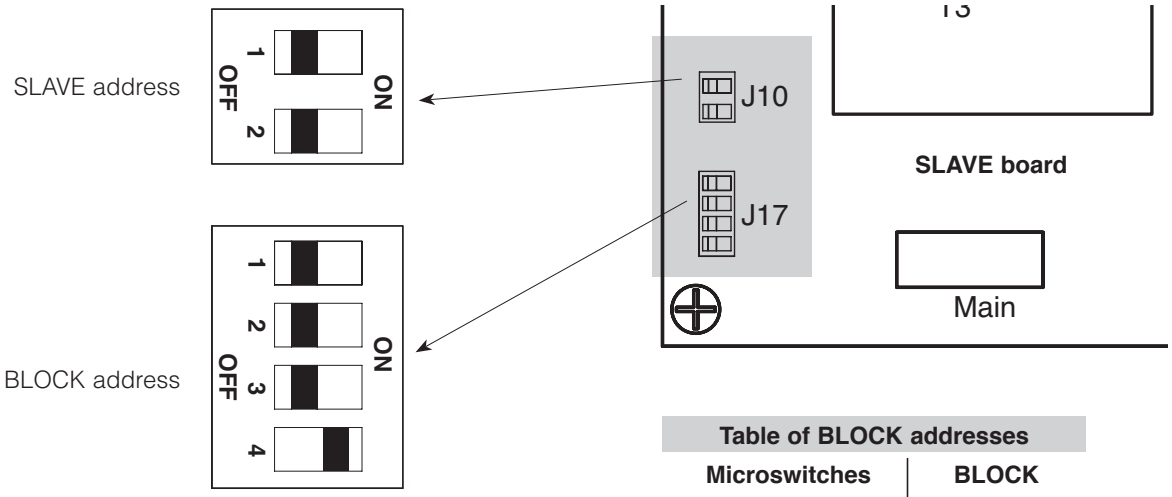

Table of SLAVE addresses

Microswitches 1	Microswitches 2	SLAVE address
OFF	OFF	1
OFF	ON	2
ON	OFF	3
ON	ON	4

Table of BLOCK addresses

Microswitches 1	2	3	4	BLOCK
OFF	OFF	OFF	OFF	Emergency
OFF	OFF	OFF	ON	1st block
OFF	OFF	ON	OFF	2nd block
OFF	OFF	ON	ON	3rd block
OFF	ON	OFF	OFF	4th block
OFF	ON	OFF	ON	5th block
OFF	ON	ON	OFF	6th block
OFF	ON	ON	ON	7th block
ON	OFF	OFF	OFF	8th block
ON	OFF	OFF	ON	9th block
ON	OFF	ON	OFF	10th block
OFF	OFF	ON	ON	11th block
ON	ON	OFF	OFF	12th block
ON	ON	OFF	ON	13th block
ON	ON	ON	OFF	14th block
ON	ON	ON	ON	15th block

Example configuration of a set of 7 burners in cascading

If installing a set of seven slave generators, there are two blocks: the first made up of four generators, and the second of three. Therefore, two blocks need to be configured, with address 1 and 2 respectively, and the generators belonging to the first block must have address 1, 2, 3 and 4, and those belonging to the second block address 1, 2 and 3.

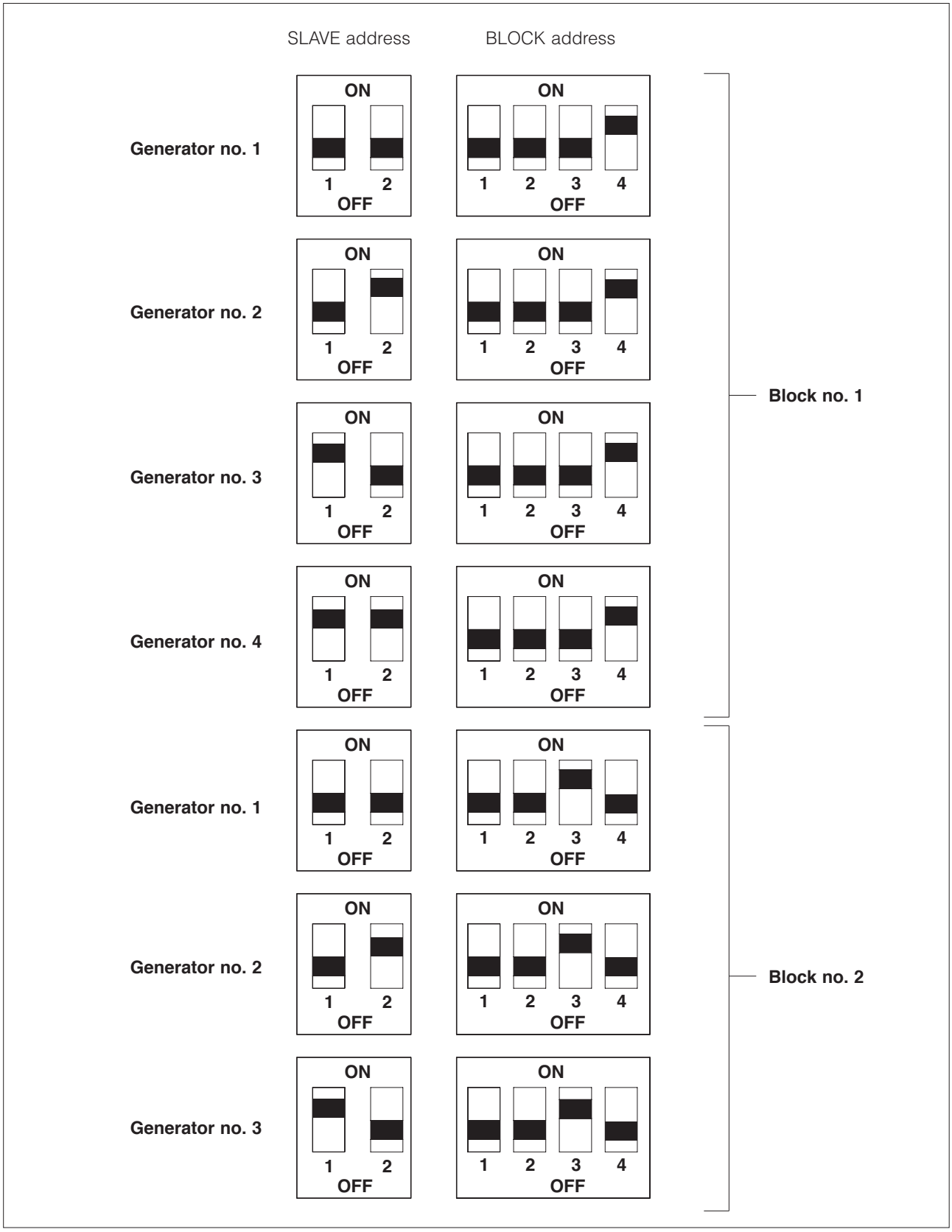

ERRORS ON THE MASTER BOARD

The following tables provide a description of the errors that may occur on the Master board.

The errors can be divided into two groups:
- Type A errors, which can only be deactivated by pressing RESET (see ref. 3 on page 18).
- Type E errors, which are deactivated when the causes are no longer present.

Permanent errors, TYPE A

N°	N° on PC	Cause	Checks and solutions
A16	**10**	Internal error	Replace the master board
A18	**12**	Internal error	Replace the master board
A20	**14**	Internal error	Replace the master board

Errors deactivated automatically, TYPE E

The following errors may occur, and can be deactivated automatically.
If any one of these errors occurs, the red LED comes on (see ref. 4 on page 18).

N°	N° on PC	Cause	Checks and solutions
E25	**0**	Internal error	Replace the master board
E23	**28**	Internal error	Replace the master board
E24	**29**	Internal error	Replace the master board
E25	**30**	Internal error	Replace the master board
E26	**31**	Internal error	Replace the master board
E32	**33**	Slave boards not found	Check that the two-pole switches on the individual units are in the “ON” position Check the slave board addresses Check the slave board bus connections Replace the master board Replace the slave board
E34	**42**	Internal 50Hz error	The mains frequency is not 50Hz
E02	**51**	NTC1 open (NTC1: outlet sensor)	Outlet sensor in the primary circuit not connected or faulty
E04	**53**	NTC3 open (NTC3: DHW sensor)	DHW sensor not connected or faulty
E18	**67**	NTC1 shorted (NTC1: outlet sensor)	Outlet sensor in the primary circuit short-circuited
E20	**69**	NTC3 shorted (NTC3: DHW sensor)	DHW sensor short-circuited

ERRORS ON THE SLAVE BOARD

List of slave errors: manual reset (see ref. 3 on page 18)

If slave errors with manual reset occur, the Slave reset button can be used (see ref. 13 on page 18).

N°	N° on PC	Cause	Checks and solutions
A01	**1**	5 failed ignition attempts	Check that the gas valve is open. Check the presence of sparks between the two ignition electrodes Check the ignition cable The gas valve is not opening Replace the slave board Check that the float in the siphon is not jammed Check that the module is not full of condensation Check that the gas shut-off valve has not tripped
A02	**2**	Too many ignition failures caused by flame ionisation problems	Clean the ignition electrodes Replace the ignition electrodes Replace the ignition cable
A04	**4**	Water side maximum temperature thermostat tripped (> 90°C). Board version 43	Insufficient circulation in the primary circuit Faulty maximum temperature thermostat
A05	**5**	Gas valve coil faultyFalse contact in the gas valve connector. Faulty gas valve connector. Water side maximum temperature thermostat tripped (> 90°C) with burner on	Replace the gas valve Check the gas valve connector Replace the gas valve connector Insufficient circulation in the primary circuit Faulty maximum temperature thermostat

N°	N° on PC	Cause	Checks and solutions
A06	**6**	Internal error	Replace the slave board
A07	**7**	Internal error	Replace the slave board
A08	**8**	Internal error	Replace the slave board
A09	**9**	50Hz error	The mains frequency is not 50Hz
A10	**10**	Internal error	Replace the slave board
A11	**11**	Internal software error	Press the reset button
A12	**12**	Internal error	Replace the slave board
A17	**17**	Outlet sensor exceeded temperature limit	Check that the flow rate in each unit's water circuit is correct. 2 m^3/h for each unit
A18	**18**	Return sensor exceeded temperature limit	Check that the flow rate in each unit's water circuit is correct. 2 m^3/h for each unit
A16	**16**	Maximum temperature thermostat contacts open with the burner off	Connector not properly connected or faulty. Faulty maximum temperature thermostat
A19	**19**	Flue gas sensor tripped for over-temperature > 80°C (fan operates at maximum speed)	Insufficient heat exchange on flue gas side of heat exchanger. Clean the heat exchanger on the flue gas side
A20	**20**	The flame goes out too late after the gas valve closes	Check that the gas valve is functioning correctly. Replace the gas valve
A22	**22**	Internal error	Replace the slave board
A23	**23**	Internal clock error	Internal clock error Can be caused by a transient power failure The error disappears after a few seconds
A24	**24**	Fan error	The measured fan speed varies too much from the read speed Check the fan Check the fan's electrical connections Replace the fan

List of slave errors: automatic reset

N°	N° on PC	Cause	Checks and solutions
E33	**33**	Live and neutral reversed	Restore the correct live-neutral connections
E34	**34**	Reset button error. The button has been pressed more than 7 times in 30 minutes	Wait for the error to disappear. If the error is still present after a maximum of 40 minutes, replace the slave board
E35	**35**	Differential water pressure switch (open contacts)	Check that the flow rate in each unit's water circuit is correct. 2 m^3/h for each unit. Replace the water pressure switch (cal 500 l/h)
E36	**36**	Internal error	Replace the slave board
E37	**37**	Flame detection error	Clean the electrodes. Replace the electrodes
E38	**38**	Flu gas sensor shorted	Check the flue gas sensor connector. Replace the flue gas sensor
E39	**39**	Flue gas sensor contacts open	Check the flue gas sensor connector. Replace the flue gas sensor
E40	**40**	The frequency is not 50 Hz	Check the frequency of the mains power supply
E41	**41**	Internal error	Replace the slave board
E42	**42**	Outlet sensor shorted	Check the outlet sensor connector. Replace the outlet sensor
E43	**43**	Outlet sensor contacts open	Check the outlet sensor connector. Replace the outlet sensor
E44	**44**	Return sensor shorted	Check the return sensor connector. Replace the return sensor
E45	**45**	Return sensor contacts open	Check the return sensor connector. Replace the return sensor
E46	**46**	Outlet sensor exceeded temperature limit	Check that the flow rate in each unit's water circuit is correct. 2 m^3/h for each unit
E47	**47**	Return sensor exceeded temperature limit	Check that the flow rate in each unit's water circuit is correct. 2 m^3/h for each unit
E48	**48**	Flue gas sensor exceeded temperature limit (fan operates at maximum speed)	Check that the flow rate in each unit's water circuit is correct. Approx. 2 m^3/h for each unit. Clean the heat exchanger on the water and flue gas sides
E49	**49**	No or bad ground connection	Check the ground connection

LIST OF PARAMETERS

No.	Name	lower limit	upper limit	default setting	UOM	Description
User parameters						
1	SetPoint_ch_high	10	Par. 17	**70**	°C	If Par14=0 this is the high temperature circuit set point If Par14=1 this is the maximum temperature in the high temperature circuit
2	SetPoint_DHW	10	Par. 8	**50**	°C	
3	SetPoint_ch_low	10	Par. 23	**40**	°C	If Par22=0 this is the low temperature circuit set point If Par22=1 this is the maximum temperature in the low temperature circuit
INSTALLER parameters accessible by password: 22						
6	DHW_type	0	6	**0**		0 = No DHW service 1 = Instant with NTC probe 2 = Storage heater with NTC probe 5 = Instant with flow switch 6 = Storage heater with thermostat
7	P_DHW_max	1	255	**230 (*)**		Maximum speed/output in DHW
8	T_DHW_limit	10	80	**60**		Limit for user DHW setting
9	DHW_priority	0	2	**0**		0 = Sliding A 1 = Sliding B 2 = Absolute priority
10	T_tank_extra	0	50	**30**	°C	Modular temp system in DHW = Par. 2 + Par. 10
11	T_tank_hyst_up	0	20	**1**	°C	Upper DHW differential
12	T_tank_hyst_down	0	20	**5**	°C	Lower DHW differential
13	N°_burn_DHW	1	60	**60**		Maximum no. of burners in DHW
14	CH_type_high	0	3	**1**		0 = Fixed temperature 1 = Climate with outside probe 2 = 0-10 Vdc for heat output 3 = 0-10 Vdc for temperature
15	P_ch_max	1	255	**230 (*)**		Maximum speed/output in CH
16	CH_priority	0	2	**0**		0 = No priority between circuits 1 = Priority to the high temperature circuit 2 = Priority to the low temperature circuit
17	T_CH_high_limit	10	80	**80**	°C	Limit for user high temperature circuit setting
18	T_CH_high_foot	10	Par. 1	**50**	°C	Min. high circuit set point at the maximum outside temperature (Par. 38)
19	CH_high_hyst_on	0	20	**7**	°C	Start hysteresis in high temperature circ.
20	CH_high_hyst_off	0	20	**3**	°C	Stop hysteresis in high temperature circ.
21	Attenuation_high	0	70	**0**	°C	Set point attenuation with room thermo. open
22	CH_type_low	0	3	**1**		0 = Fixed temperature 1 = Climate with outside probe 2 = 0-10 Vdc for heat output 3 = 0-10 Vdc for temperature
23	T_CH_low_limit	10	70	**50**	°C	Limit for user low temperature circuit setting
24	T_CH_low_foot	10	Par. 13	**25**	°C	Min. low circuit set point - at the maximum outside temperature (Par. 38)
25	Attenuation_low	0	70	**0**	°C	Set point attenuation with room thermo. open

No.	Name	lower limit	upper limit	default settinglimit	UOM limit	Description setting
26	CH_low_hyst_on	0	20	**5**	°C	Start hysteresis in low circuit calculated on the mixer outlet temp
27	CH_low_hyst_off	0	20	**3**	°C	Stop hysteresis in low circuit calculated on the mixer outlet temp
28	Mix_valve_step_ open_time	0	255	**5**	s	For each step the valve opens 1/2 of the set value
29	Mix_valve_step_close_time	0	255	**7**	s	For each step the valve closes 1/2 of the set value
30	Mix_valve_interval_time	0	255	**5**	s	Mixing valve delay
31	Mixing_p_hyst	0	255	**2**	°C	Hysteresis for maximum valve opening
32	Mixing_still_hyst	0	255	**2**	°C	
33	Power control mode	0	1	**1**		0 = Minimum number of burners 1 = Maximum number of burners
34	3rd pump	0	1	**0**		0 = System/loop 1 = Low temperature circuit
35	Frost protection	-30	15	**3**	°C	System
36	Gas_type	1	31	**01**		01 = NG with flue < 15m 02 = NG with flue > 15m 03 = LPG with flue < 15m 04 = LPG with flue > 15m
37	T_out_min	-20	30	**0**	°C	
38	T_out_max	0	30	**18**	°C	
39	T_out_correct	-30	30	**0**	°C	
40	T_emergency	10	80	**70**	°C	
41	Parameter_reset	0	1	**0**		
42	Flow switch on slave	0	1	**1**		0 = The slave does not control the pressure switch
43	Protocol	0	1	**1**		0 = Eco protocol 1 = Argus link (new)

CONVERSION FROM ONE TYPE OF GAS TO THE OTHER

The **Vokera CondexaPRO** Boiler is supplied for operation on G20 (natural gas). However, it can be converted for operation on G30-G31 (LPG), using the special kit supplied.

⚠ The conversion must only be carried out by **Vokera Ltd** or personnel authorised by **Vokera**, even when the boiler is already installed.

⚠ Once the conversion has been completed, set the boiler again as described in the paragraph on "Adjustments".

Before performing the conversion:

- Disconnect the power supply from the appliance by moving the main switch to "off";

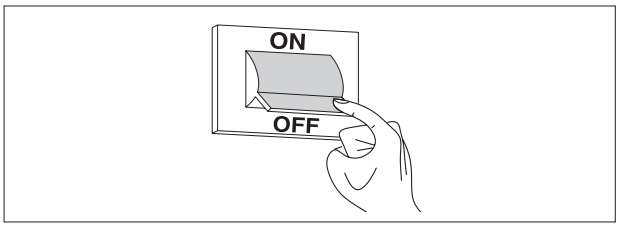

- Close the fuel valve.

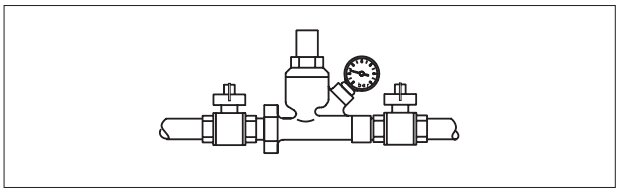

To install the kit:

- Unscrew the fastening screws (1) on the front panel (2)

- Pull the base of the panel (2) outwards and then upwards to release it from the frame and then remove it

- Set parameter 36 to 03 or 04, according to the length (L) of the flue:

  03 = L < 15 m
  04 = L > 15 m.

  The fan speed is controlled automatically.

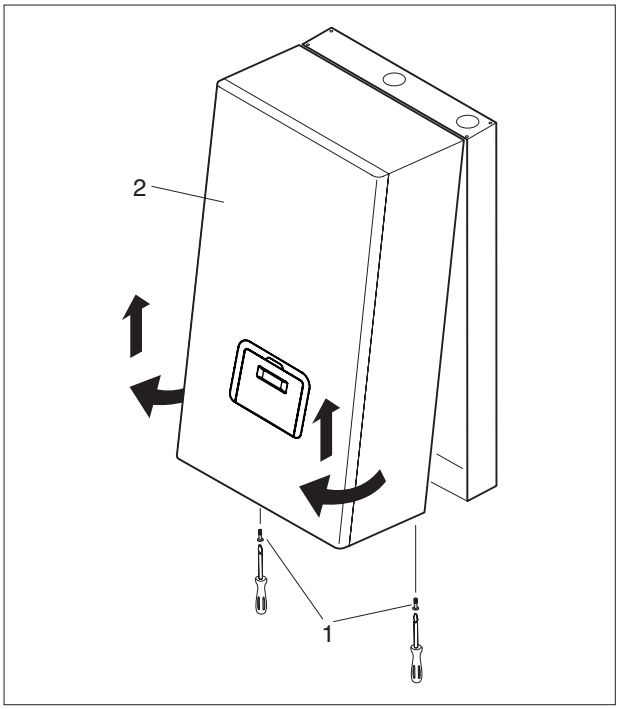

- Disassemble the gas valve from the fan assembly by loosening the three screws (3)

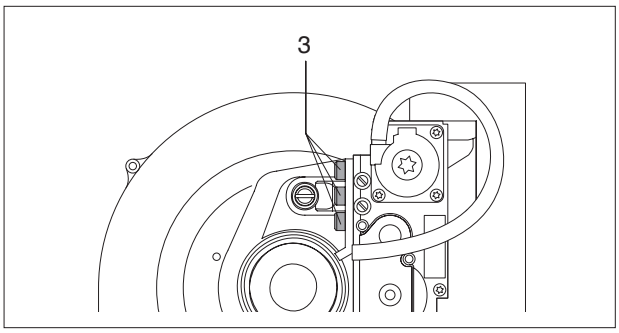

- Locate the gas jet and seal. If the system is methane fuelled, there is no diaphragm.

- Replace the calibrated diaphragm fitted on the gas valve with the diaphragm (4) supplied inside the kit, marked “**6.5**”.
  Only if the boiler is supplied by a mixture of gases that causes ignition problems, use the other diaphragm (5) marked “**6.75**”.

- Reassemble the gas valve

- Apply the sticker (6) for G30-G31, supplied inside the kit, on the inside of the panelling, and remove the sticker for G20

- Remove the G20 gas label (7) from the side of the frame.

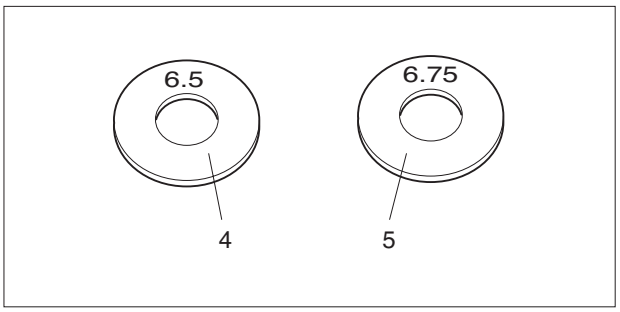

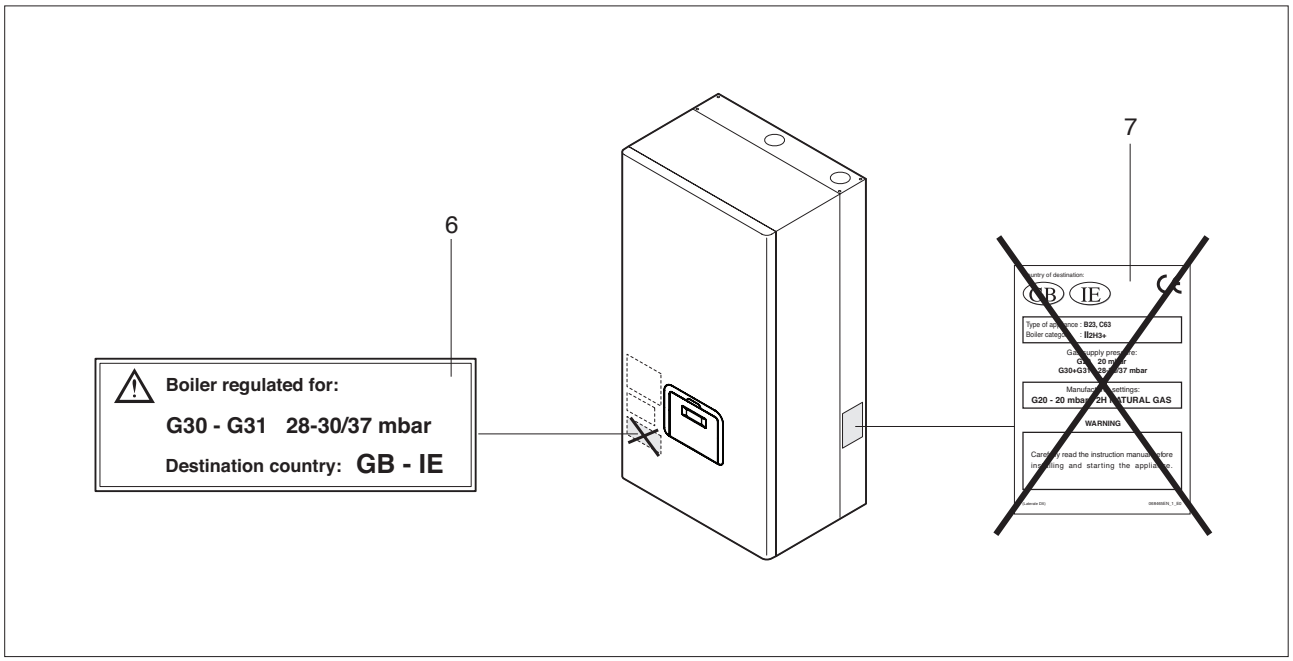

After having installed the kit make sure that:

- All the joints made are tight

- All the calibration operations described in the "Adjustments" paragraph below have been completed.

The **Vokera CondexaPRO** Boiler is supplied for operation on G20 (natural gas), as indicated on the rating plate, and has already been adjusted in the factory by the manufacturer.
If, however, the adjustments need to be performed again, for example after special servicing operations, the replacement of the gas valve, or alternatively following the conversion from G20 to G30-G31 or vice-versa, proceed as follows.

⚠ **The adjustments at maximum and minimum output must be carried out in the sequence described, and only by Vokera Ltd or personnel authorised by Vokera.**

CO_2 ADJUSTMENT AT MAXIMUM OUTPUT

- Press the "**MODE**" and "**+**" buttons together for 5s.
- Start the boiler by adjusting the room thermostat.
  The boiler will operate at maximum output showing "H" on the display, followed by the outlet temperature (chimney sweep function).
- Unscrew the cap (1) and insert the combustion analyser probe
- Adjust the CO_2 using a screwdriver on the adjustment screw (2) located on the fan assembly (**turning clockwise decreases the CO_2 value**), so as to achieve a value of 9.0% for G20 and 10.4% for G30-G31.

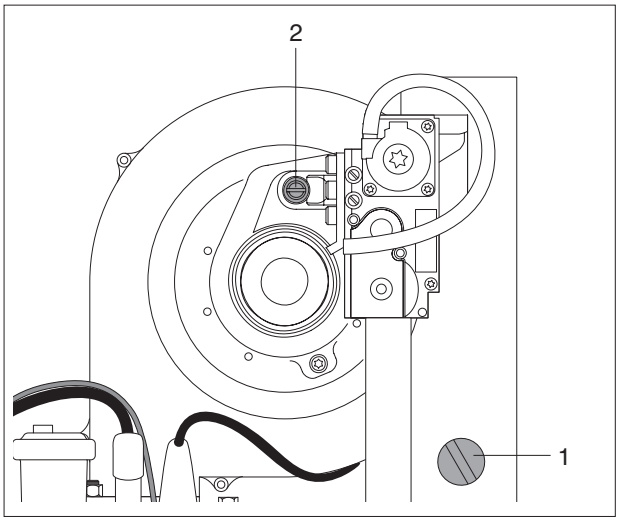

CO_2 ADJUSTMENT AT MINIMUM OUTPUT

- Press the "**MODE**" and "**-**" buttons together for 5s.
  The boiler will operate at minimum output showing "L" on the display, followed by the outlet temperature.
- Adjust the CO_2 using a screwdriver on the adjustment screw (3) located on the fan assembly (**turning anti-clockwise decreases the CO_2 value**), so as to achieve a value of 9.0% for G20 and 10.4% for G30-G31.

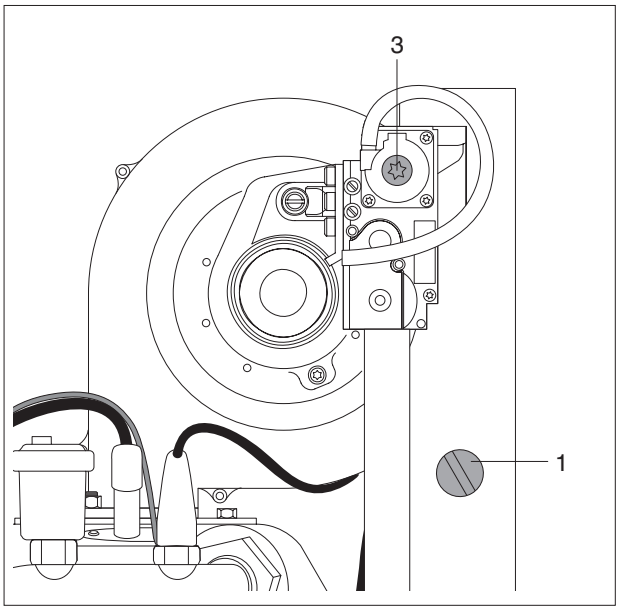

CHECKING THE CALIBRATION

Press the "MODE" and "+" buttons together for 5s and check the max CO_2 value (9.0% for G20 and 10.4% for G30-G31). Then press the "MODE" and "-" buttons for 5s and check the min CO_2 value (9.0% for G20 and 10.4% for G30-G31).

After having completed the checks:

- Stop the chimney sweep function by pressing "**MEMO**"
- Adjust the thermostat so as to stop the boiler
- Remove the analyser probe and carefully retighten the cap (1).

TEMPORARY SHUTDOWN

In the event of temporary absence over the weekend, brief trips, etc. proceed as follows:

- Set the room thermostats to around 10°C

- Set parameter 2 to "10" or alternatively set the storage heater thermostat to 10°C

By leaving the power supply on, as signalled by the green LED flashing, and the fuel supply open the boiler is protected.

The electronic controller has a **frost protection** function that is also **active** in standby

The frost protection function has two levels:

- the first starts the pump
  if the manifold temperature ≥ 5°C, or alternatively, when CH_type=1 and the outside probe is connected; if the out. temp ≤ 3°C (Par. 35=Frost_protection) the system pump and the pump in the high temperature circuit are started.

- the second starts the pump and the burner
  if after 10 minutes the temperature in the manifold ≤ 5°C, a burner is started at maximum output until the temperature in the manifold ≥ 20°C;
  if after 10 minutes the temperature in the manifold ≥ 5°C, while if CH_Type = 1 and the outside probe is connected, and the outside temperature ≤ 3°C, the pump continues operating until the outside temperature ≥ 3°C.

SHUTTING DOWN FOR EXTENDED PERIODS

If the **CondexaPRO** boiler is not used for an extended period, the following operations must be performed:

- Move the main system switch and the main boiler switch (1) to "off" and check that the green indicators light (2) and (3) are off.

- Close the fuel and water valves on the central heating system.

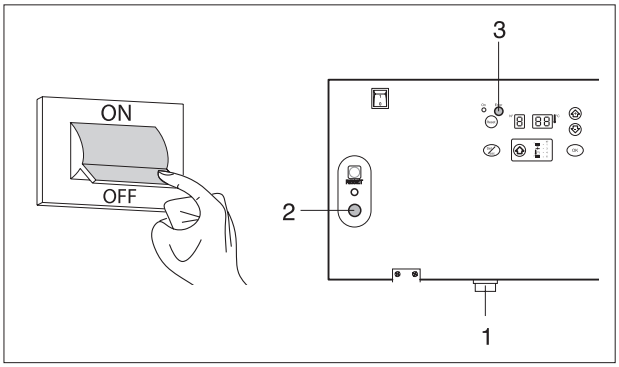

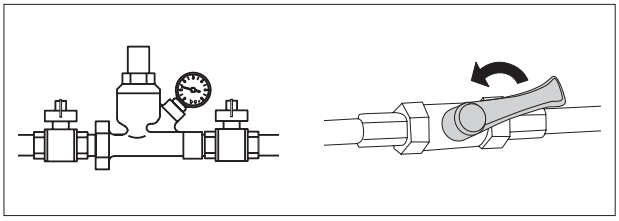

⚠ **In this case, the frost protection system is deactivated. Empty the central heating and DHW system if there is the risk of freezing.**

SERVICING

Periodical servicing is a "requirement" and is also essential for the safety, the efficiency and the long life of the appliance. It ensures reduced consumption and polluting emissions and maintains the reliability of the product over time.
The appliance can be serviced **Vokera Ltd** or personnel authorised by **Vokera**.
Analysis of combustion, performed before starting servicing, provides useful information on the operations to be performed.

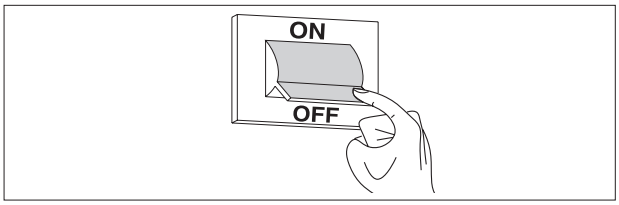

Before performing any operation:

- Disconnect the power supply by moving the main system switch to "off"

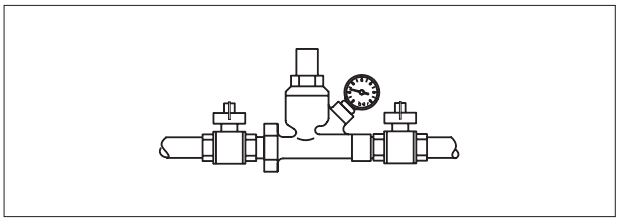

- Close the fuel valve.

CLEANING THE BOILER AND DISMANTLING THE INSIDE COMPONENTS

Before performing any cleaning operation, disconnect the power supply by moving the main system switch to "off".

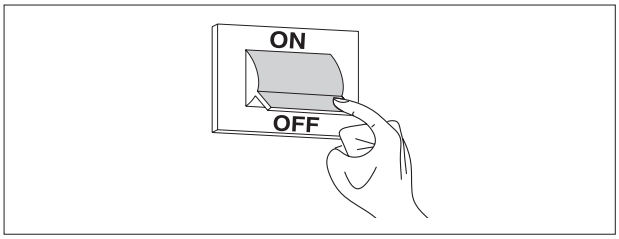

OUTSIDE
Clean the casing, the control panel, the painted parts and the plastic parts with cloths dipped in soap and water. In the case of hard-to-remove stains, wet the cloth with a 50% mixture of water and denatured alcohol or specific products.

Do not use fuels and/or sponges with abrasive solutions or detergent powder.

INSIDE
Before starting the inside cleaning operations:

- Close the gas valves

- Close the system valves.

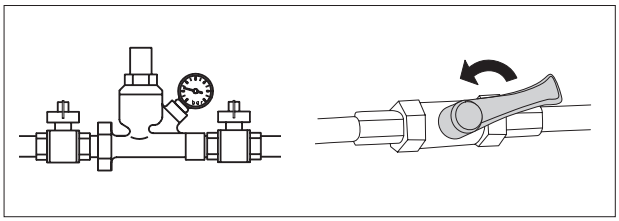

Removing the front panel, accessing the control panel and the inside of the boiler

- Unscrew the fastening screws (1) on the front panel (2)

- Pull the base of the panel (2) outwards and then upwards to release it from the frame and then remove it

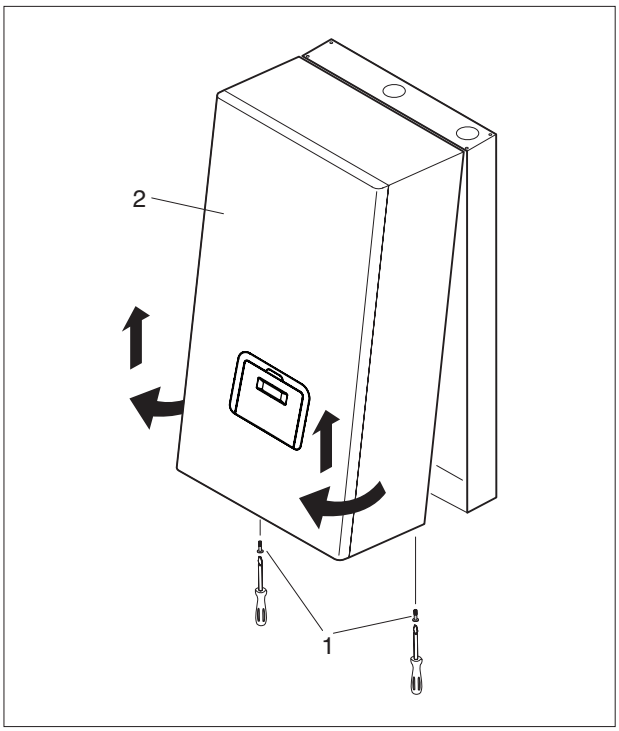

- Turn the control panel (3) 90°C and take out the four screws (4) so as to remove the rear cover.

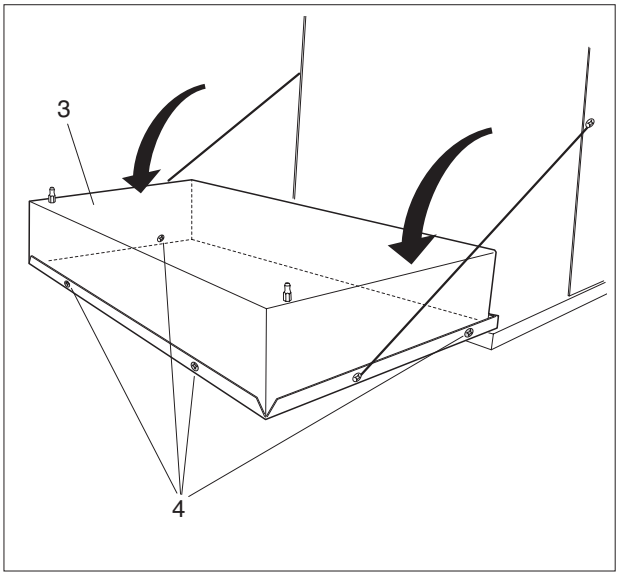

- The terminal block (5) and the boards can now be accessed:
  - Master board (6) (models 50 M and 100 M)
  - first Slave board (7)
  - second Slave board (8) (models 100 M and 100 S)

Once the servicing operations have been completed, reassemble the components in the reverse order.

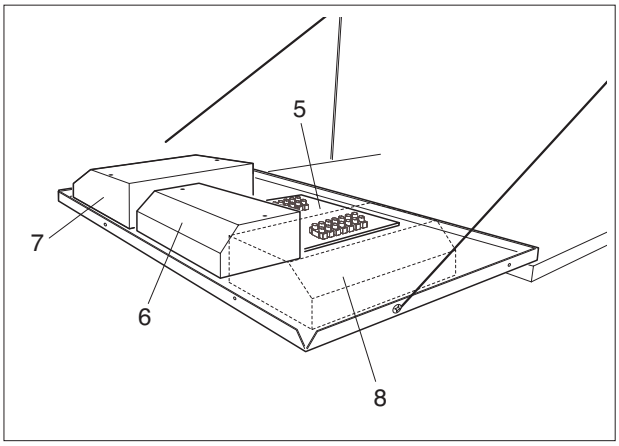

Dismantling the Master and Slave boards

- Remove the panel front and access the inside of the control panel (see the steps described on the previous page).
- Remove the screws (V) and then the cover from the Master board.
- Repeat the same operation to remove the cover (7) from the first Slave board and (8) any second Slave board.
- Remove the wiring connectors from the boards and unscrew the fastening screws so as to remove the boards.

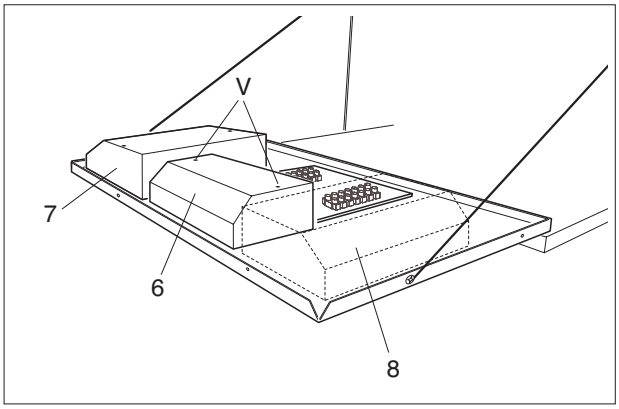

⚠ If replacing the Master board, refer to the wiring diagram on page 14 to restore the connections.

Once the servicing operations have been completed, reassemble the components in the reverse order.

Dismantling the fan

- Remove the front and top panel of the boiler (see the operations described on page 65).
- Remove the wiring (5) from the fan (6)
- Unscrew the four screws (7) that fasten the fan (6) to the exchanger using an 8 mm socket wrench
- Unscrew the two screws (8) that fasten the fan (6) to the air conveyor (9)
- Remove the fan (6).

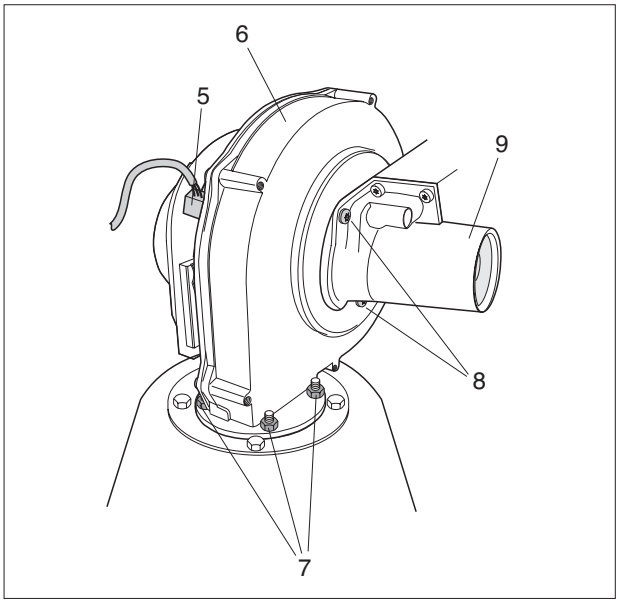

Once the cleaning operations have been completed, reassemble the components in the reverse order.

⚠ Check that the gas connection is tight.

Dismantling and cleaning the burner and the exchanger

- Remove the front and top panel of the boiler (see the operations described on page 65).

- Remove the wiring (5) from the fan (6)

- Unscrew the two screws (8) that fasten the fan (6) to the air conveyor (9)

- Unscrew the four screws (10) that fasten the fan assembly (6) to the exchanger, using a 10 mm socket wrench

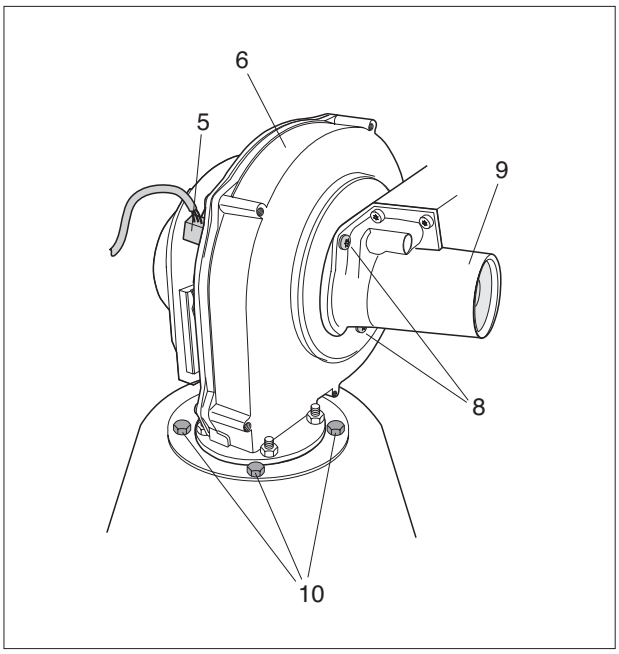

- Remove the gasket (11) and remove the burner (12)

- Remove the electrode plate (13), check the condition of the electrode and replace if necessary.

Once the cleaning operations have been completed, reassemble the components in the reverse order.

⚠ Check that the gas connection is tight.

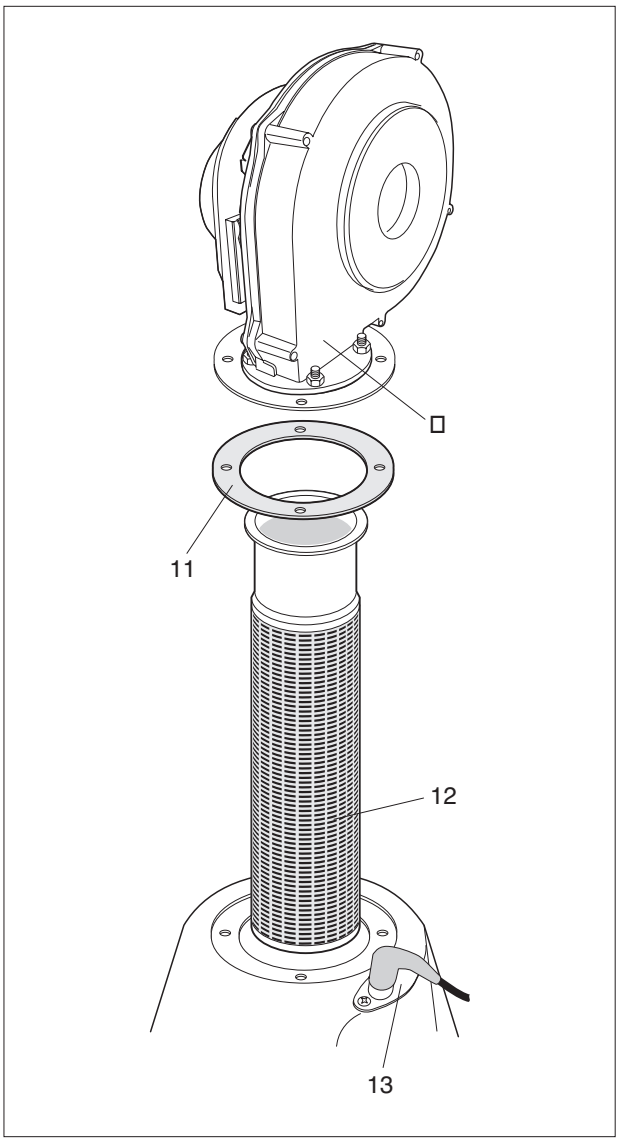

Cleaning the drain trap and condensate drain

- Remove the front and top panel of the boiler (see the operations described on page 65) and identify the condensate drain trap (14)

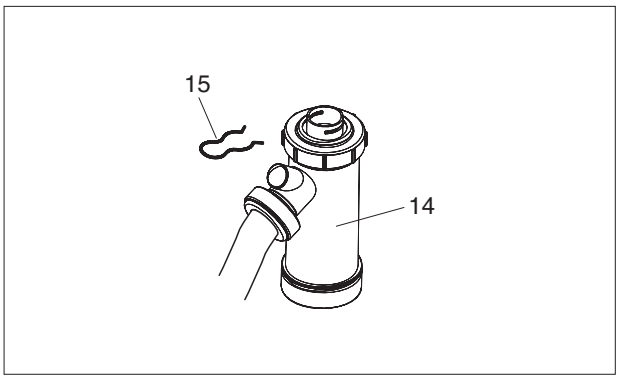

- Remove the safety pin (15), remove the corrugated condensate drain pipe, remove the drain trap and dismantle it, using the two screw caps (16).

- Remove the float (17) and clean all the components.

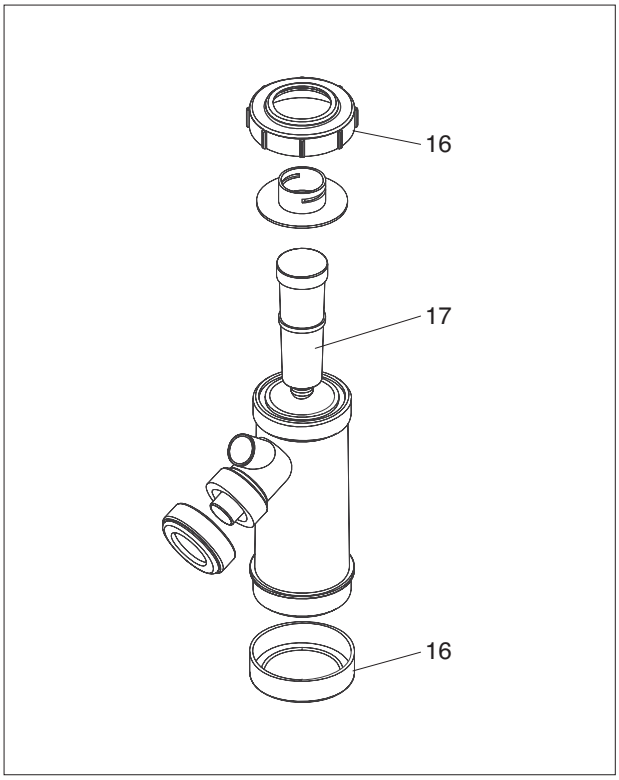

Once the cleaning operations have been completed, reassemble the components in the reverse order.

TROUBLESHOOTING

PROBLEM	CAUSE	SOLUTION
Smell of gas	Gas supply circuit	Check the tightness of the joints and that the pressure test points are closed
Smell of unburned gas	Flue gas circuit	Check: - The tightness of the joints - The absence of obstructions - The quality of combustion
Irregular combustion	Burner gas pressure	Check adjustment
	Diaphragm installed	Check diameter
	Condition of the burner and exchanger	Check they are clean
	Exchanger openings blocked	Check the openings are clean
	Fan fault	Check operation
Delays in ignition with pulsating operation of the burner	Burner gas pressure	Check adjustment
	Ignition electrode	Check positioning and condition
The boiler becomes dirty in a short time	Combustion	Check flame colour Check combustion adjustments
The burner does not start when receiving the signal from the boiler controller	Gas valve	Check that 230 Vac is present at the terminals on the gas valve; check wiring and connections

PROBLEM	CAUSE	SOLUTION
The boiler doesn't start	No power supply (the display is blank)	Check: - electrical connections - fuse
The boiler does not reach the operating temperature	Boiler body dirty	Clean combustion chamber
	Insufficient burner flow-rate	Check burner adjustment
	Boiler controller	Check correct operation Check set temperature
Thermal overload on the heat generator	Boiler controller	Check correct operation Check set temperature Check electrical wiring Check position of the probe sensors
	No water	Check vent valve Check pressure in central heating circuit
The heat generator reaches the temperature but the central heating system is cold	Air in the system	Vent the system
	Pump fault	Reset the pump Replace the pump Check the electrical connections to the pump

PROBLEM	CAUSE	SOLUTION
The pump doesn't start	Pump fault	Reset the pump Replace the pump Check the electrical connections to the pump
Frequent activation of the system safety valve	System safety valve	Check calibration or efficiency
	Pressure in heating system circuit	Check charge pressure Check pressure reducer
	System expansion vessel	Check efficiency

GAS BOILER SYSTEM COMMISSIONING CHECKLIST

This Commissioning Checklist is to be completed in full by the competent person who commissioned the boiler as a means of demonstrating compliance with the appropriate Building Regulations and then handed to the customer to keep for future reference.

Failure to install and commission this equipment to the manufacturer's instructions may invalidate the warranty but does not affect statutory rights.

Customer Name _____ Telephone Number _____

Address _____

Boiler Make and Model _____

Boiler Serial Number _____

Commissioned by *(print name)* _____ CORGI ID Number _____

Company Name _____ Telephone Number _____

Company Address _____

_____ Commissioning Date _____

To be completed by the customer on receipt of a Building Regulations Compliance Certicate *:

Building Regulations Noti cation Number *(if applicable)* _____

CONTROLS Tick the appropriate boxes

Time and Temperature Control to Heating	Room Thermostat and Programmer/Timer ☐	Programmable Room Thermostat ☐	Load/Weather Compensation ☐	Optimum Start Control ☐
Time and Temperature Control to Hot Water		Cylinder Thermostat and Programmer/Timer ☐		Combination Boiler ☐
Heating Zone Valves			Fitted ☐	Not Required ☐
Hot Water Zone Valves			Fitted ☐	Not Required ☐
Thermostatic Radiator Valves			Fitted ☐	Not Required ☐
Automatic Bypass to System			Fitted ☐	Not Required ☐
Boiler Interlock				Provided ☐

ALL SYSTEMS

The system has been u shed and cleaned in accordance with BS7593 and boiler manufacturer's instructions Yes ☐

What system cleaner was used?

What inhibitor was used? Quantity _____ *litres*

CENTRAL HEATING MODE Measure and Record:

Gas Rate	_____ m^3/hr	OR		_____ ft^3/hr
Burner Operating Pressure (if applicable)	_____ mbar	OR	Gas Inlet Pressure	_____ mbar
Central Heating Flow Temperature				_____ °C
Central Heating Return Temperature				_____ °C

COMBINATION BOILERS ONLY

Is the installation in a hard water area (above 200ppm)? Yes ☐ No ☐

If yes, has a water scale reducer been tted? Yes ☐ No ☐

What type of scale reducer has been tted?

DOMESTIC HOT WATER MODE Measure and Record:

Gas Rate	_____ m^3/hr	OR		_____ ft^3/hr
Burner Operating Pressure (at maximum rate)	_____ mbar	OR	Gas Inlet Pressure (at maximum rate)	_____ mbar
Cold Water Inlet Temperature				_____ °C
Hot water has been checked at all outlets			Yes ☐ Temperature	_____ °C
Water Flow Rate				_____ *l/min*

CONDENSING BOILERS ONLY

The condensate drain has been installed in accordance with the manufacturer's instructions and/or BS5546/BS6798 Yes ☐

ALL INSTALLATIONS

If required by the manufacturer, record the following CO_2 _____ % OR CO _____ *ppm* OR CO/CO_2 Ratio _____

The heating and hot water system complies with the appropriate Building Regulations Yes ☐

The boiler and associated products have been installed and commissioned in accordance with the manufacturer's instructions Yes ☐

The operation of the boiler and system controls have been demonstrated to and understood by the customer Yes ☐

The manufacturer's literature, including Benchmark Checklist and Service Record, has been explained and left with the customer Yes ☐

Commissioning Engineer's Signature _____

Customer's Signature _____

(To conr m satisfactory demonstration and receipt of manufacturer's literature)

*All installations in England and Wales must be noti ed to Local Authority Building Contr ol (LABC) either directly or through a Competent Persons Scheme. A Building Regulations Compliance Certi cate will then be issued to the customer.

benchmark COLLECTIVE MARK
THE MARK OF QUALITY FOR THE INSTALLATION, COMMISSIONING AND SERVICING OF DOMESTIC HEATING AND HOT WATER SYSTEMS

©Heating and Hotwater Industry Council (HHIC)

www.centralheating.co.uk

SERVICE RECORD

It is recommended that your heating system is serviced regularly and that the appropriate Service Record is completed.

Service Provider

Before completing the appropriate Service Record below, please ensure you have carried out the service as described in the manufacturer's instructions.

Always use the manufacturer's speci ed spar e part when replacing controls.

SERVICE 1 Date

Energy Ef ciency Checkl ist completed? Yes ☐ No ☐

Engineer Name

Company Name

Telephone Number

CORGI ID Number

Comments

Signature

SERVICE 2 Date

Energy Ef ciency Checkl ist completed? Yes ☐ No ☐

Engineer Name

Company Name

Telephone Number

CORGI ID Number

Comments

Signature

SERVICE 3 Date

Energy Ef ciency Checkl ist completed? Yes ☐ No ☐

Engineer Name

Company Name

Telephone Number

CORGI ID Number

Comments

Signature

SERVICE 4 Date

Energy Ef ciency Checkl ist completed? Yes ☐ No ☐

Engineer Name

Company Name

Telephone Number

CORGI ID Number

Comments

Signature

SERVICE 5 Date

Energy Ef ciency Checkl ist completed? Yes ☐ No ☐

Engineer Name

Company Name

Telephone Number

CORGI ID Number

Comments

Signature

SERVICE 6 Date

Energy Ef ciency Checkl ist completed? Yes ☐ No ☐

Engineer Name

Company Name

Telephone Number

CORGI ID Number

Comments

Signature

SERVICE 7 Date

Energy Ef ciency Checkl ist completed? Yes ☐ No ☐

Engineer Name

Company Name

Telephone Number

CORGI ID Number

Comments

Signature

SERVICE 8 Date

Energy Ef ciency Checkl ist completed? Yes ☐ No ☐

Engineer Name

Company Name

Telephone Number

CORGI ID Number

Comments

Signature

SERVICE 9 Date

Energy Ef ciency Checkl ist completed? Yes ☐ No ☐

Engineer Name

Company Name

Telephone Number

CORGI ID Number

Comments

Signature

SERVICE 10 Date

Energy Ef ciency Checkl ist completed? Yes ☐ No ☐

Engineer Name

Company Name

Telephone Number

CORGI ID Number

Comments

Signature

CondexaPRO 50 M - 100 M

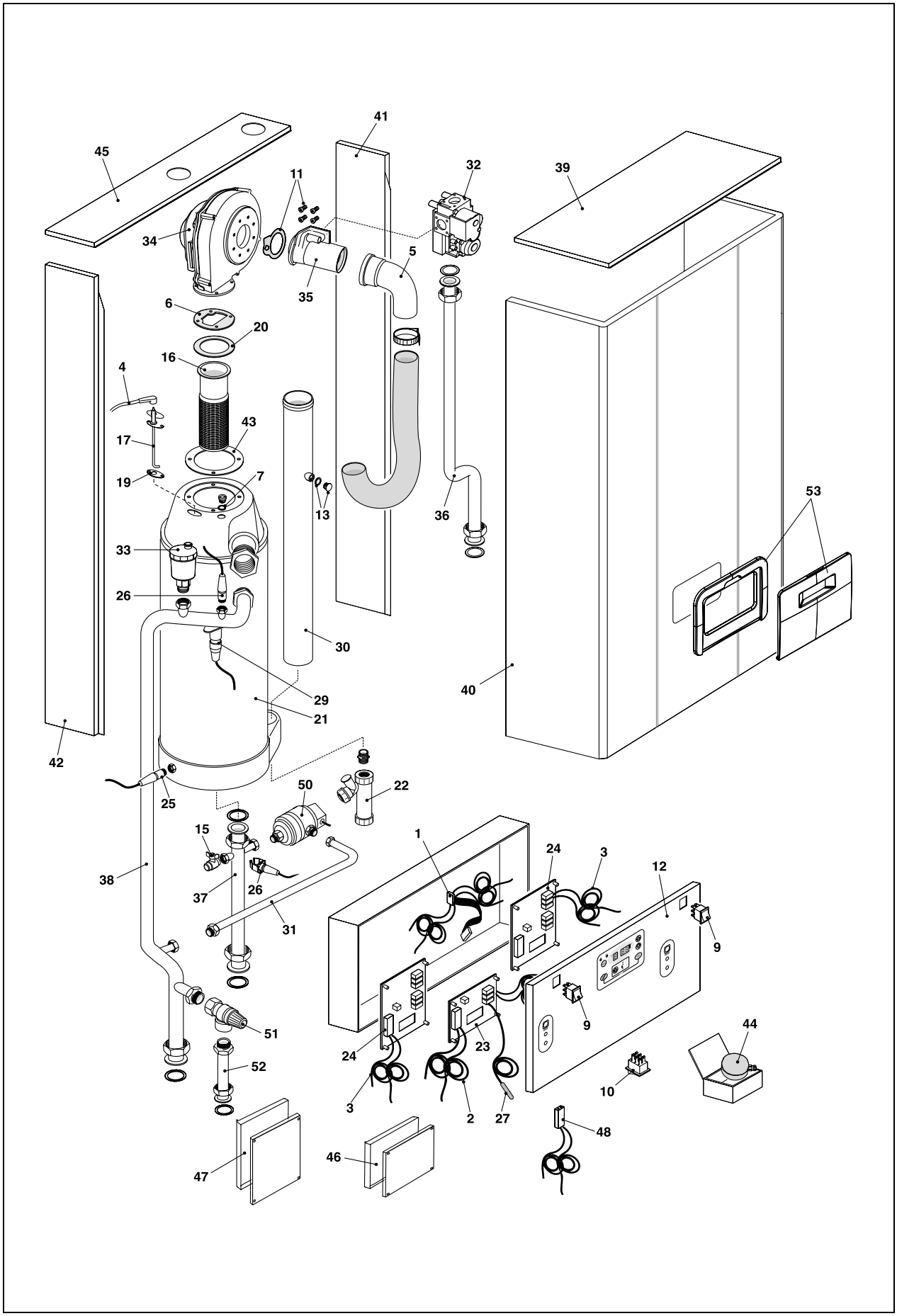

POS.	DESCRIPTION	50m	100m
1	Wiring harness	B81517	B81517
2	Master wiring harness	B81519	B81519
3	Slave wiring harness	B81518	B81518
4	Wiring harness	R105901	R105901
5	Pipe	R106339	R106339
6	Washer	R105903	R105903
7	Gasket	R105904	R105904
9	Switch	R105906	R105906
10	On / off button round	R105907	R105907
11	Venturi tube screw washer	R105908	R105908
12	Instrumental panel	R106847	R106847
13	Plug	B81516	B81516
15	Cock	R105912	R105912
16	Premix burner	B81511	B81511
17	Electrode ignition and detection	R105914	R105914
19	Gasket	R105916	R105916
20	Gasket	R105917	R105917
21	Condensing exchanger	R105918	R105918
22	Condensation outlet kit	R105919	R105919
23	Master printed circuit board	R106791	R106791
24	Slave printed circuit board	R107934	R107934
25	NTC sensor	R7236	R7236
26	Detector	B81512	B81512
27	Temperature detector	R105924	R105924
29	Thermostat	R105926	R105926
30	Pipe	B81515	B81515
31	Pipe	B81514	B81514
32	Gas valve	R106250	R106250
33	Air venting plug	R105930	R105930
34	Fan	R105931	R105931
35	Venturi tube	R105932	R105932
36	Gas pipe	R105970	R105970
37	Pipe	B81513	B81513
38	Pipe	R106337	R106337
39	Upper front panel	R105965	R105965
40	Case	B81508	B81508
41	Right panel	R105968	R105968
42	Left panel	R105969	R105969
43	Exchanger flange	R105915	R105915
44	Detector	R104654	R104654
45	Top rear	R105975	R105975
46	Master box	R106792	R106792
47	Panel and cover slave	R105974	R105974
48	Serial Wiring	B81520	B81520
50	Pressure	B81510	B81510
51	Safety valve	R106338	R106338
52	Pipe	R106339	R106339
53	Digital display frame assembly	R106849	R106849

CondexaPRO 100 S

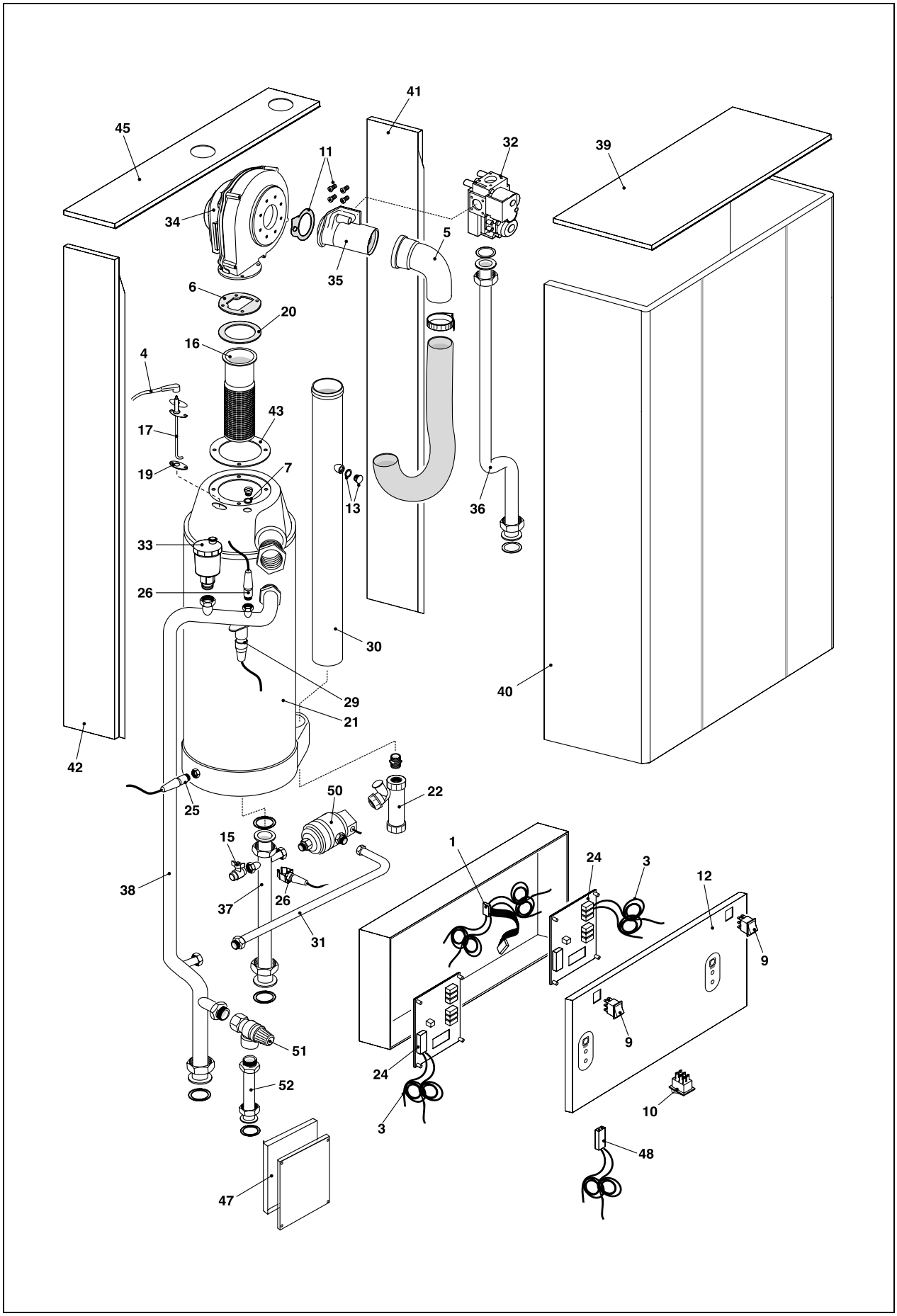

POS.	DESCRIPTION	100s
1	Wiring harness	B81517
3	Slave wiring harness	B81518
4	Wiring harness	R105901
5	Pipe	R106339
6	Washer	R105903
7	Gasket	R105904
9	Switch	R105906
10	On / off button round	R105907
11	Venturi tube screw washer	R105908
12	Instrumental panel	R106847
13	Plug	B81516
15	Cock	R105912
16	Premix burner	B81511
17	Electrode ignition and detection	R105914
19	Gasket	R105916
20	Gasket	R105917
21	Condensing exchanger	R105918
22	Condensation outlet kit	R105919
24	Slave printed circuit board	R107934
25	NTC sensor	R7236
26	Detector	B81512
29	Thermostat	R105926
30	Pipe	B81515
31	Pipe	B81514
32	Gas valve	R106250
33	Air venting plug	R105930
34	Fan	R105931
35	Venturi tube	R105932
36	Gas pipe	R105970
37	Pipe	B81513
38	Pipe	R106337
39	Upper front panel	R105965
40	Front panel	R105966
41	Right panel	R105968
42	Left panel	R105969
43	Exchanger flange	R105915
45	Top rear	R105975
47	Panel and cover slave	R105974
48	Serial Wiring	B81520
50	Pressure	B81510
51	Safety valve	R106338
52	Pipe	R106339

Vokèra
heating for life

Cod. 068464EN - Rev. 15 (10/12)

Registered address:
Vokèra Ltd
Borderlake House
Unit 7 Riverside Industrial Estate
London Colney
Herts AL2 1HG

enquiries@vokera.co.uk

www.vokera.co.uk
www.vokera.ie

Sales, General Enquires
T 0844 391 099
F 0844 391 0998

Vokèra Ireland
West Court, Callan
Co Kilkenny
T 056 7755057
F 056 7755060

Vokèra Limited reserve the right to change
specification without prior notice
Consumers statutory rights are not affected.

A Riello Group Company.
Company Reg No: 1047779