spares & parts online
IBASIS.co.uk©

Vokèra
heating for life

Mynute VHE

High efficiency open vent boiler

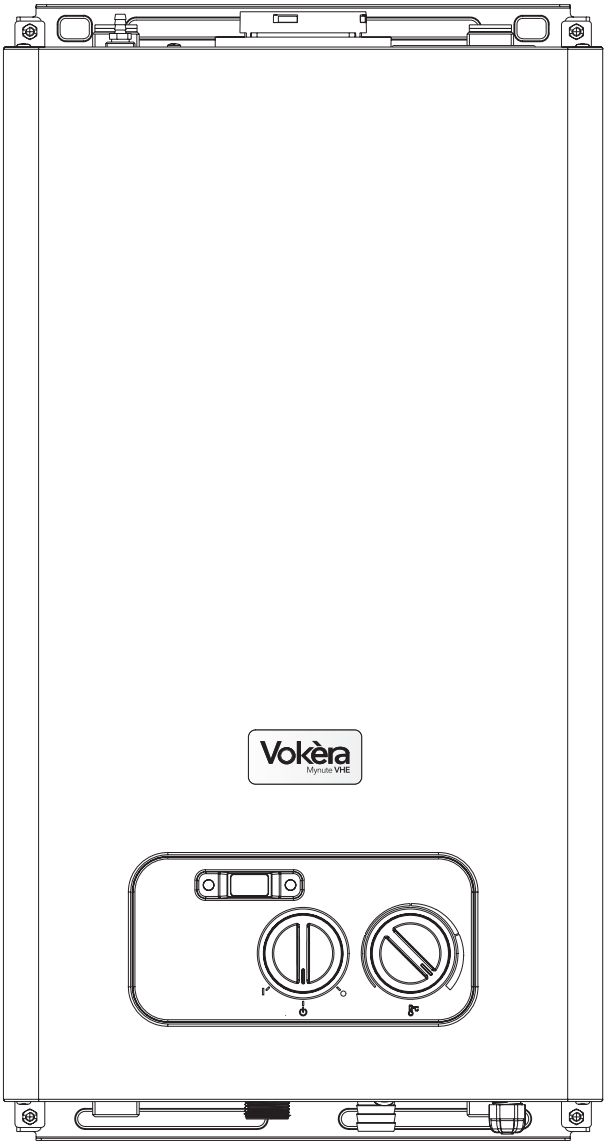

Installation

& Servicing

Instructions

CE

THESE INSTRUCTIONS TO BE RETAINED BY USER

benchmark
COLLECTIVE MARK
THE MARK OF QUALITY FOR THE INSTALLATION, COMMISSIONING AND SERVICING OF DOMESTIC HEATING AND HOT WATER SYSTEMS

Vokèra is a licensed member of the Benchmark scheme which aims to improve the standards of installation and commissioning of domestic hot water systems in the UK.

Contents

Design principles & operating sequence		Page
1.1	Principle components	3
1.2	Mode of operation (at rest)	3
1.3	Mode of operation	3
1.4	Safety devices	3

Technical data		Page
2.1	Central heating	4
2.2	Gas pressures	4
2.3	Dimensions	4
2.4	Clearances	4
2.5	Connections	4
2.6	Electrical	4
2.7	Flue details (concentric)	4
2.7A	Flue details (twin pipes)	4
2.7B	Flue details (80/125)	4
2.8	Efficiency	4
2.9	Emissions	4

General requirements (UK)		Page
3.1	Related documents	6
3.2	Location of appliance	6
3.3	Gas supply	6
3.4	Flue system	6
3.5	Air supply	6
3.6	Water circulation	6
3.7	Electrical supply	7
3.8	Mounting on a combustible surface	7
3.9	Timber framed buildings	7
3.10	Inhibitors	7
3.11	Appliance pipework configuration	7

General requirements (EIRE)		Page
3A.1	Related documents	9
3A.2	Location of appliance	9
3A.3	Gas supply	9
3A.4	Flue system	9
3A.5	Air supply	9
3A.6	Water circulation	9
3A.7	Electrical supply	9
3A.8	Mounting on a combustible surface	9
3A.9	Timber framed buildings	9
3A.10	Inhibitors	10
3A.11	Appliance pipework configuration	10
3A.12	Declaration of conformity	10

Installation		Page
4.1	Delivery	11
4.2	Contents	11
4.3	Unpacking	11
4.4	Preparation for mounting the appliance	11
4.5	Fitting the flue	11
4.6	Connecting the gas & water	15
4.7	Electrical connections	16

Commissioning		Page
5.1	Gas supply installation	18
5.2	The heating system	18
5.3	Initial filling of the system	18
5.4	Initial flushing of the system	18
5.5	Pre-operation checks	18
5.6	Initial lighting	18
5.7	Checking gas pressure & combustion analysis	18
5.8	Final flushing of the heating system	18
5.9	Setting the boiler operating temperature	19
5.10	Setting the system design pressure	19
5.11	Final checks	19
5.12	Instructing the user	19

Servicing		Page
6.1	General	20
6.2	Routine annual servicing	20
6.3	Replacement of components	20
6.4	Component removal procedure	20
6.5	Automatic air release valve	20
6.6	Primary thermistor	20
6.7	Return thermistor	20
6.8	Printed circuit board	21
6.9	Gas valve	21
6.10	Injectors	21
6.11	Electrodes and condense sensor	21
6.12	Flue fan & mixer	22
6.13	Burner	23
6.14	Main heat exchanger	23
6.15	Condense trap removal	23
6.16	Flue collector removal	23

Checks, adjustments and fault finding		Page
7.1	Checking appliance operation	24
7.2	Appliance modes of operation	24
7.3	Appliance fan speeds	24
7.4	Checking the CO_2 & adjusting the valve	25
7.5	Combustion analysis test	26
7.6	External faults	26
7.7	Electrical checks	26
7.8	Fault finding	26
7.9	Component values & characteristics	27
7.10	Fault codes	27

Wiring diagrams		Page
8.1	External wiring	28
8.2	Typical control applications	28
8.3	Other devices	28

Exploded diagrams		Page
9.1	Table 1	31
9.2	Table 2	32
9.3	Table 3	33
9.4	Table 4	34
9.5	Table 5	35

L.P.G. instructions		Page
10.1	Related documents	36
10.2	Technical data	36
10.3	Converting the appliance gas type	36
10.4	Gas supply	36
10.5	Gas supply installation	36
10.6	Adjusting the gas valve	36
10.7	Appliance fan speeds	37

	Benchmark	38-39

INTRODUCTION

The **Mynute VHE** comprises a range of high-efficiency open-vent boilers with outputs ranging from 12 to 20kW. These appliances – by design – incorporate premix combustion and a radial aluminium heat exchanger.

NOTE

This booklet relates specifically to the Mynute 12 & 15VHE only.

The **Mynute VHE 12VHE & 15VHE** are produced as room sealed, category II2H3P appliances, suitable for internal wall mounting applications only. Each appliance is provided with a fan powered flue outlet with an annular co-axial combustion air intake that can be rotated – horizontally – through 360 degrees for various horizontal or vertical applications; in addition, there is also a facility to re-configure the flue outlet from a top outlet to rear outlet. The **Mynute VHE** can also be used with the Vokera twin flue system.

These appliances are designed for use with an open-vent system; consequently they are not intended for use on sealed or pressurised systems. Please contact the Vokera technical helpline for advice should you wish to use the **Mynute VHE** on a sealed/pressurised system.

This booklet is an integral part of the appliance. It is therefore necessary to ensure that the booklet is handed to the person responsible for the property in which the appliance is located/installed. A replacement copy can be obtained from Vokera customer services.

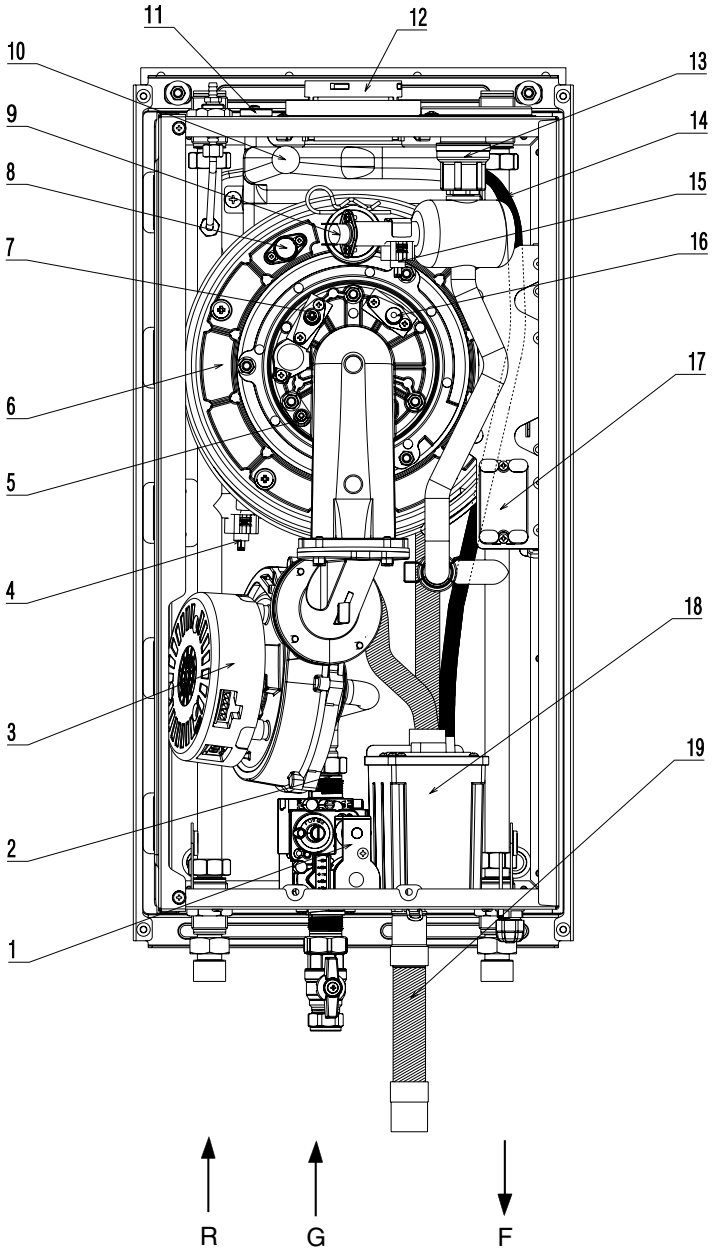

Fig. 1

General layout (fig. 1)

1 Gas valve
2 Injector
3 Fan assembly
4 Return sensor
5 Condensate level sensor
6 Main heat exchanger
7 Spark Electrode
8 High limit thermostat
9 Limit thermostat
10 Internal flue gas analysis test point
11 External flue gas analysis test point
12 Flue outlet & air intake
13 Top AAV
14 Drain pipe
15 Flow sensor
16 Sensing Electrode
17 Ignition transformer
18 Condense trap
19 Condensing drain

R Heating return connection
F Heating flow connection
G Gas connection

The Mynute VHE is approved for use with C13 & C33 type flue applications.

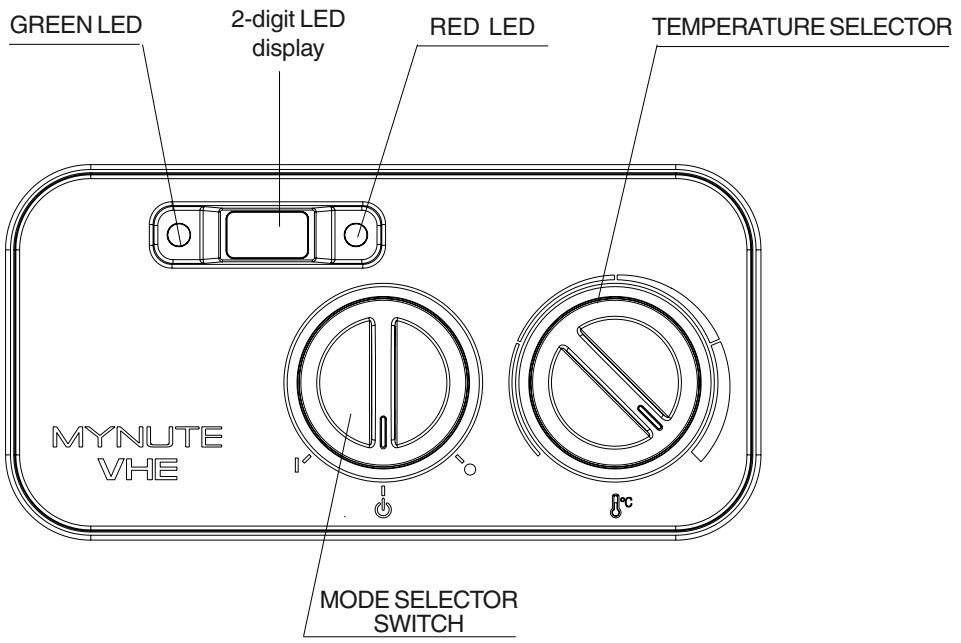

Fig. 1A

◎	Boiler at reset/standby	Select this position if/when the boiler requires to be reset
⏻	Boiler switched OFF	Select this position if you want the boiler to remain OFF (this will over-ride any heating/hot water request from the time-clock/programmer)
I	Boiler switched ON	Select this position when you want the boiler to respond to a heating/hot water request from the time-clock/programmer
°C	Temperature selector	Move the temperature selector clockwise to increase the boiler outlet temperature, or counter-clockwise to reduce the outlet flow temperature
88	2-digit LED display	Displays the current outlet temperature of the boiler. During a fault condition, the appropriate fault code will be displayed (refer to the users handbook for instructions regarding fault codes)
○	Green LED lit	Boiler is working/responding to a heating/hot water request
	Red LED lit	Boiler has identified a fault and has failed-safe. Refer to users handbook for instructions on how to reset

1.1 PRINCIPLE COMPONENTS

- A fully integrated electronic control board featuring electronic temperature control, anti-cycle control, pump over-run, self-diagnostic fault indicator, full air/gas modulation.
- Radial aluminium heat exchanger.
- Electronic ignition with flame supervision
- Fan
- Condensate level sensor.

1.2 MODE OF OPERATION (at rest)

When the appliance is at rest and there are no requests for heating or hot water, the following functions are active:

- 2-stage frost-protection system – the frost-protection system protects the appliance against the risk of frost damage. The first stage enables activation of the pump should the temperature of the appliance fall to 6°C. Should the first stage become active, the appliance will function on minimum +25% power until it reaches 35°C.
- Anti-block function – the anti-block function enables the pump to be energised for short periods, when the appliance has been inactive for more than 24-hours.

1.3 MODE OF OPERATION

When there is a request for heat and/or hot water, via the programmer/time clock and/or any external control, the pump and fan are started, the fan speed will modulate until the correct signal voltage is received at the control PCB. At this point an ignition sequence is enabled.

Ignition is sensed by the electronic circuitry to ensure flame stability at the burner. Once successful ignition has been achieved, the electronic circuitry increases the gas rate to 75% for a period of 15 minutes. Thereafter, the boiler's output will either be increase to maximum or modulate to suit the set requirement.

When the appliance reaches the desired temperature the burner will shut down and the boiler will perform a three-minute anti-cycle (timer delay).

When the request for heat has been satisfied the pump and fan may continue to operate to dissipate any residual heat within the appliance.

NOTES

- The pump must be connected directly to the designated terminals within the appliance controls panel.
- When power is restored to the PCB and/or the PCB is powered for the first time, the appliance will enter a 2-minute purge cycle whereby only the pump will run for 15-seconds then off for 15-seconds.

1.4 SAFETY DEVICES

When the appliance is in use, safe operation is ensured by:

- Fan speed sensor and pressure differential mechanism to ensure safe operation of the burner
- A high limit thermostat that over-rides the temperature control circuit to prevent or interrupt the operation of the burner.
- Flame sensor that will shut down the burner when no flame signal is detected.
- A sensor that interrupts the operation of the appliance if the condense pipe becomes blocked.

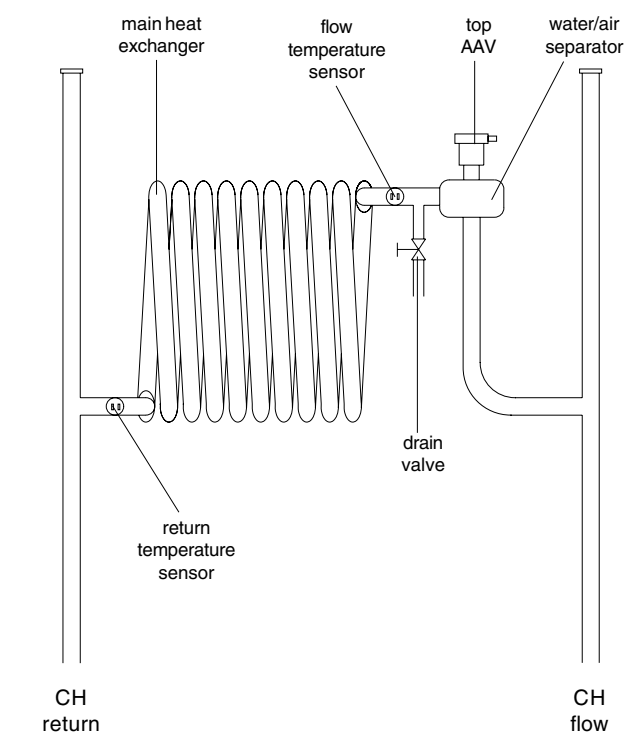

Fig. 2

2.1 Central Heating	Mynute 12 VHE	MYNUTE 15 VHE
Heat input (kW)	12.00	15.00
Maximum heat output (kW) 60/80°C	11.74	14.60
Minimum heat output (kW) 60/80°C	3.44	3.44
Maximum heat output (kW) 30/50°C	12.64	15.74
Minimum heat output (kW) 30/50°C	3.82	3.82
Minimum static head	1 metre	1 metre
Maximum static head	30 metres	30 metres
Minimum flow rate	500 l/h*	650 l/h*
2.2 Gas Pressures		
Inlet pressure (G20)	20.0 mbar	20.0 mbar
Maximum gas rate (m^3/hr)	1.27	1.59
Minimum gas rate (m^3/hr)	0.37	0.37
2.3 Dimensions		
Height	640mm	
Width	340mm	
Depth	340mm	
Dry weight	25 kg	
2.4 Clearances		
Sides	12mm	
Top	150mm from casing or 25mm above flue elbow (whichever is applicable)	
Bottom	150mm	
Front	600mm	
2.5 Connections		
Flow & return	22mm	
Gas	15mm	
Condense	21mm	
2.6 Electrical		
Power consumption (Watts)	35	53
Supply (V/Hz)	230/50	230/50
Internal fuse	3.15A T (for PCB) - 3.15A F (for connections block)	
External fuse	3A	3A
2.7 Flue Details (concentric - 60/100)		
Maximum horizontal flue length (60/100mm)	7.8m	7.8m
Maximum vertical flue length (60/100mm)	8.8m	8.8m
Rear flue	8m	8m
2.7A Flue Details (concentric 80/125mm)		
Maximum horizontal flue length (80/125mm)	25m	25m
Maximum vertical flue length (80/125mm)	30m	30m
2.7B Flue Details (twin pipes)		
Maximum horizontal flue length (80mm/80mm)	40m/40m	40m/40m
Maximum vertical flue length (80mm/80mm)	40m/40m	40m/40m
2.8 Efficiency		
SEDBUK (%)	90.3	90.0
	Band 'A'	Band 'A'
2.9 Emissions		
CO_2 @ maximum output (%)	9.0	9.0
CO_2 @ minimum output (%)	9.0	9.0
CO/CO_2 ratio @ maximum output	0.001 to 1	0.001 to 1
CO/CO_2 ratio @ minimum output	0.00005 to 1	0.00005 to 1
CO @ maximum output (mg/kWh)	161.1	171,84
CO @ minimum output (mg/kWh)	16.11	16.11
NOx @ maximum output mg/kWh)	44.10	52,92
NOx @ minimum output (mg/kWh)	35.28	35.28
NOx rating	class 5	class 5

Ref. Condition 15 °C, 1013,25 mbar, dry gas
NOTE: L.P.G. data refer to section 10

⚠ *The system should be so designed and balanced to ensure a minimum and maximum temperatute differential of 10 °C and 20 °C respectively, when the appliance is operating at maximum output.

Fig. 3

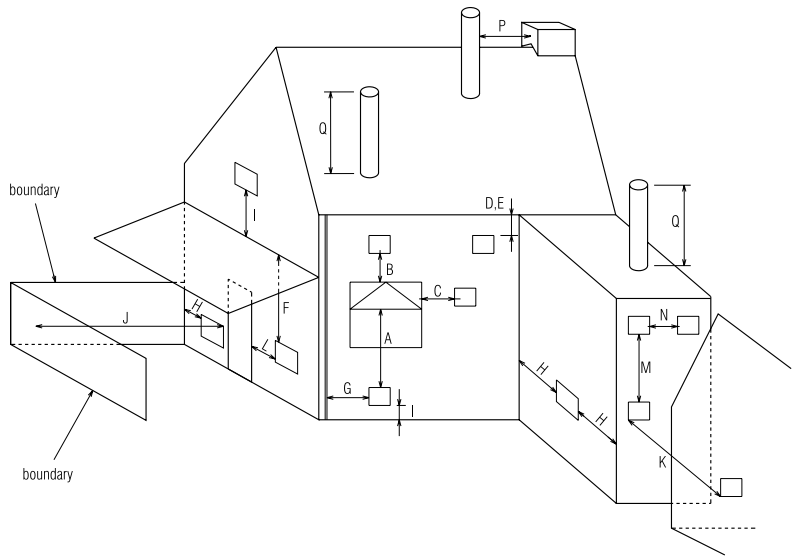

Key	Location	Minimum distance
A	Below an opening (window, air-brick, etc.)	300 mm
B	Above an opening (window, air-brick, etc.)	300 mm
C	To the side of an opening (window, air-brick, etc.)	300 mm
D	Below gutter, drain-pipe, etc.	25 mm
E	Below eaves	25 mm
F	Below balcony, car-port roof, etc.	25 mm
G	To the side of a soil/drain-pipe, etc.	25 mm
H	From internal/external corner or boundary	300 mm
I	Above ground, roof, or balcony level	300 mm
J	From a surface or boundary facing the terminal	1200 mm
K	From a terminal facing a terminal	1200 mm
L	From an opening in the car-port into the building	1200 mm
M	Vertically from a terminal on the same wall	1500 mm
N	Horizontally from a terminal on the same wall	300 mm
P	From a structure to the side of the vertical terminal	500 mm
Q	From the top of the vertical terminal to the roof flashing	As determined by the fixed collar of the vertical terminal

This appliance must be installed by a competent person in accordance with the Gas Safety (Installation & Use) Regulations.

3.1 RELATED DOCUMENTS

The installation of this boiler must be in accordance with the relevant requirements of the Gas Safety (Installation & Use) Regulations, the local building regulations, the current I.E.E. wiring regulations, the bylaws of the local water undertaking, the Building Standards (Scotland) Regulation, and Building Standards (Northern Ireland) Regulations.
It should be in accordance also with any relevant requirements of the local authority and the relevant recommendations of the following British Standard Codes of Practice.

3.2 LOCATION OF APPLIANCE

The appliance may be installed in any room or internal space, although particular attention is drawn to the requirements of the current I.E.E. wiring regulations, and in Scotland, the electrical provisions of the Building Regulations, with respect to the installation of the appliance in a room or internal space containing a bath or shower.

BS 5440	**PART 1**	**FLUES**
BS 5440	**PART 2**	**FLUES & VENTILATION**
BS 5449	**PART 1**	**FORCED CIRCULATION HOT WATER SYSTEMS**
BS 6798		**INSTALLATION OF BOILERS OF RATED INPUT NOT EXCEEDING 60kW**
BS 6891		**LOW PRESSURE INSTALLATION PIPES**

When an appliance is installed in a room or internal space containing a bath or shower, the appliance or any control pertaining to it must not be within reach of a person using the bath or shower.

The location chosen for the appliance must permit the provision of a safe and satisfactory flue and termination. The location must also permit an adequate air supply for combustion purposes and an adequate space for servicing and air circulation around the appliance. Where the installation of the appliance will be in an unusual location special procedures may be
Necessary, BS 6798 gives detailed guidance on this aspect.

A compartment used to enclose the appliance must be designed and constructed specifically for this purpose. An existing compartment/cupboard may be utilised provided that it is modified to suit.

Details of essential features of compartment/cupboard design including airing cupboard installations are given in BS 6798. This appliance is not suitable for external installation.

3.3 GAS SUPPLY

The gas meter – as supplied by the gas supplier – must be checked to ensure that it is of adequate size to deal with the maximum rated input of all the appliances that it serves. Installation pipes must be fitted in accordance with BS 6891.

Pipe work from the meter to the appliance must be of adequate size. Pipes of a smaller size than the appliance gas inlet connection must not be used. The installation must be tested for soundness in accordance with BS6891.
If the gas supply serves more than one appliance, it must be ensured that an adequate supply is maintained to each appliance when they are in use at the same time.

3.4 FLUE SYSTEM

The terminal should be located where the dispersal of combustion products is not impeded and with due regard for the damage and discoloration that may occur to building products located nearby. The terminal must not be located in a place where it is likely to cause a nuisance (see fig. 4).
In cold and/or humid weather, water vapour will condense on leaving the terminal; the effect of such pluming must be considered.
If installed less than 2m above a pavement or platform to which people have access (including balconies or flat roofs) the terminal must be protected by a guard of durable material. The guard must be fitted centrally over the terminal.

Refer to BS 5440 Part 1, when the terminal is 0.5 metres (or less) below plastic guttering or 1 metre (or less) below painted eaves. metres (or less) below plastic guttering or 1 metre (or less) below painted eaves.

3.5 AIR SUPPLY

The following notes are intended for general guidance only.
This appliance is a room-sealed, fan-flued boiler, consequently it does not require a
Permanent air vent for combustion air supply.
When installed in a cupboard or compartment, ventilation for cooling purposes is also not required.

3.6 WATER CIRCULATION

Detailed recommendations are given in BS 5449 Part 1 and BS 6798. The following notes are for general guidance only.

3.6.1 PIPEWORK

It is recommended that copper tubing to BS 2871 Part 1 is used in conjunction with soldered capillary joints.
Where possible pipes should have a gradient to ensure air is carried naturally to air release points and that water flows naturally to drain cocks.

Except where providing useful heat, pipes should be insulated to avoid heat loss and in particular to avoid the possibility of freezing. Particular attention should be paid to pipes passing through ventilated areas such as under floors, loft space, and void areas.

3.6.2 AUTOMATIC BY-PASS
Vokera recommend that an automatic bypass is installed to ensure the required minimum flow-rate is achieved at all times. Additionally, the design of the system and its controls should ensure that an adequate temperature differential is met, and should be such that it prevents boiler 'cycling'.

3.6.3 DRAIN COCKS
These must be located in accessible positions to facilitate draining of the appliance and all water pipes connected to the appliance. The drain cocks must be manufactured in accordance with BS 2879.

3.6.4 AIR RELEASE POINTS
These must be positioned at the highest points in the system where air is likely to be trapped. They should be used to expel trapped air and allow complete filling of the system.

3.7 ELECTRICAL SUPPLY
The appliance is supplied for operation on 230V @ 50Hz electrical supply; it must be protected with a 3-amp fuse. The method of connection to the mains electricity supply must allow for complete isolation from the supply. The preferred method is by using a double-pole switch with a contact separation of at least 3mm. The switch must only supply the appliance and its corresponding controls, i.e. time clock, room thermostat, etc. Alternatively an un-switched shuttered socket with a fused 3-pin plug both complying with BS 1363 is acceptable.

3.8 MOUNTING ON A COMBUSTIBLE SURFACE
If the appliance is to be fitted on a wall of combustible material, a sheet of fireproof material must protect the wall.

3.9 TIMBER FRAMED BUILDINGS
If the appliance is to be fitted in a timber framed building, it should be fitted in accordance with the Institute of Gas Engineers publication (IGE/UP/7) 'Guide for Gas Installations in Timber Frame Buildings'.

3.10 INHIBITORS
Vokera recommend that an inhibitor - suitable for use with aluminium heat exchangers - is used to protect the boiler and system from the effects of corrosion and/or electrolytic action. The inhibitor must be administered in strict accordance with the manufacturers instructions*.
*Water treatment of the complete heating system - including the boiler - should be carried out in accordance with BS 7593 and the Domestic Water Treatment Association's (DWTA) code of practice.

3.11 APPLIANCE PIPEWORK CONFIGURATION (fig.4)
The appliance 'flow' and 'return' connections can be configured to suit the following:
1. Top outlet connection
2. Bottom outlet connection
3. Top (flow), bottom (return) connection
4. Top (return) bottom (flow) connection.

3.11.1 FEED & VENT PIPEWORK
The feed and vent pipe work from the boiler to the F&E (Feed & Expansion) tank should be configured as shown in fig. 4A using a 22mm combined feed and vent pipe.

NOTE
- The combined feed and vent pipe must rise continuously and be unrestricted.
- The diameter of the combined feed and vent pipe shall be 22mm.
- The minimum distance from the top of the boiler to the bottom of the F&E tank shall be no less than 1-metre, whilst the maximum distance shall be no greater than 30-metres.

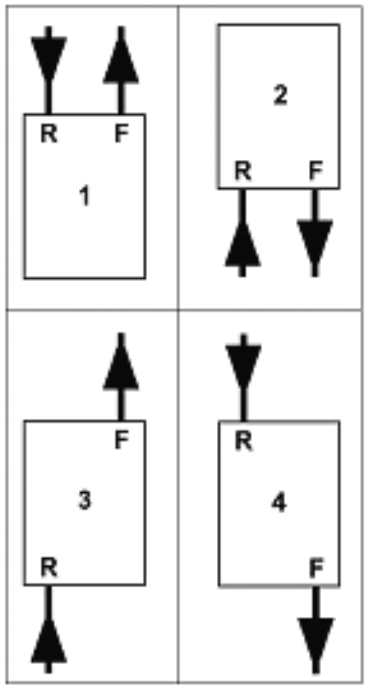

Fig. 4

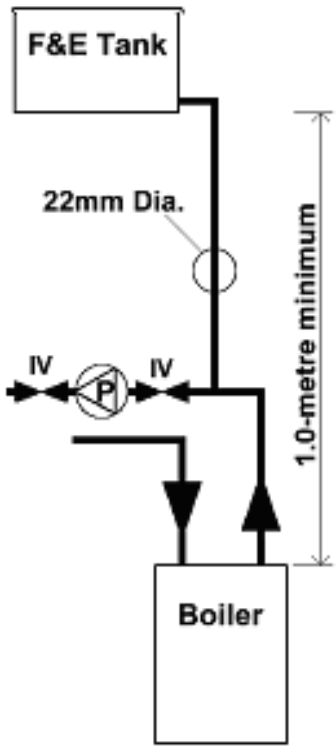

Fig. 4A

The supply of water to the F&E tank should be taken from the mains water supply via a suitable float operated valve, whilst the supply from the F&E tank to the boiler/heating circuit (via the combined feed and vent pipe) shall be unrestricted.

3.11.2 ALTERNATIVE CLOSE-COUPLED ARRANGEMENT

If necessary or if preferred, a close-coupled arrangement for the feed and expansion pipe work can be used as an alternative to a combined feed and vent pipe. The configuration of the close-coupled pipe work shall be as shown in figure 4B.

NOTE

- The distance between the cold feed pipe and the safety vent pipe shall be no more than 150mm
- The cold feed pipe must be inverted as shown in figure 4B
- The safety vent pipe must be 22mm in diameter
- The cold feed pipe must be 15mm diameter
- The cold feed pipe and safety vent pipe must both rise continuously and be unrestricted.
- The minimum distance from the top of the boiler to the bottom of the F&E tank shall be no less than 1-metre, whilst the maximum distance shall be no greater than 30-metres.
- The distance between the bottom of the F&E tank and the highest point of the safety vent pipe must be no less than 500mm.

The supply of water to the F&E tank should be taken from the mains water supply via a suitable float operated valve, whilst the supply from the F&E tank to the boiler/heating circuit (via the cold feed pipe) shall be unrestricted.

3.11.3 REMOTE CONNECTION

It's permissible to connect the feed and vent pipe work remote from the boiler, providing it's connected to the primary heating pipe work as shown in figures 4C/4D.

NOTE

The instructions for a combined feed and vent installation (3.11.1) or close-coupled arrangement (3.11.2) still apply when connecting the feed and vent pipe work remote from the appliance.

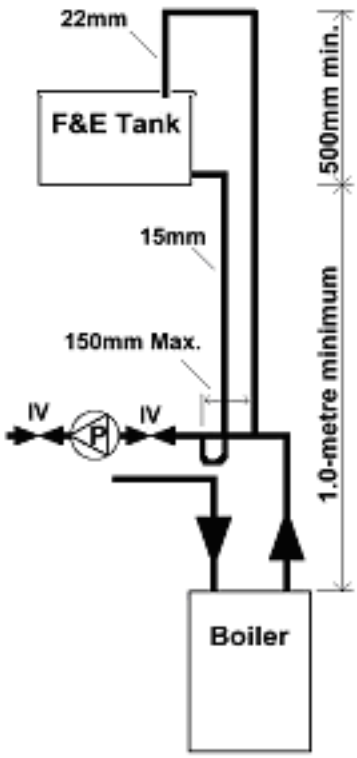

Fig. 4B

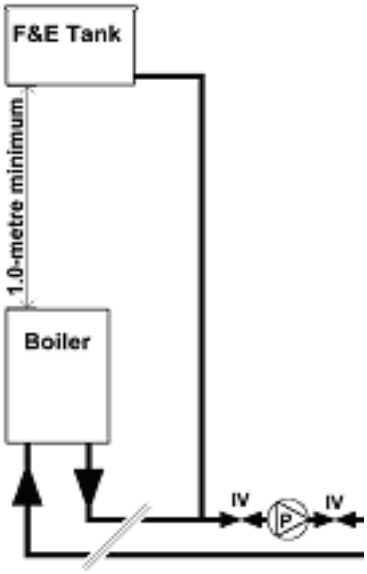

Fig. 4C

Fig. 4D

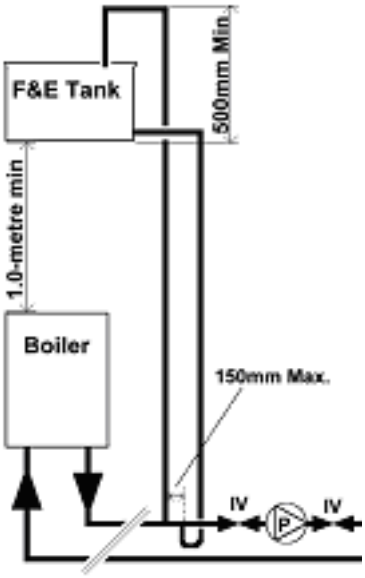

This appliance must be installed by a competent person in accordance with and defined by, the Standard Specification (Domestic Gas Installations) Declaration (I.S. 813).

3A.1 RELATED DOCUMENTS

The installation of this boiler must be in accordance with the relevant requirements of the local building regulations, the current ETCI National Rules for Electrical Installations and the bylaws of the local water undertaking.
It should be in accordance also with any relevant requirements of the local and/or district authority.

3A.2 LOCATION OF APPLIANCE

The appliance may be installed in any room or internal space, although particular attention is drawn to the requirements of the current ETCI National Rules for Electrical Installations, and I.S. 813, Annex K.

When an appliance is installed in a room or internal space containing a bath or shower, the appliance or any control pertaining to it must not be within reach of a person using the bath or shower.

The location chosen for the appliance must permit the provision of a safe and satisfactory flue and termination. The location must also permit an adequate air supply for combustion purposes and an adequate space for servicing and air circulation around the appliance. Where the installation of the appliance will be in an unusual location special procedures may be necessary, refer to I.S. 813 for detailed guidance on this aspect.
A compartment used to enclose the appliance must be designed and constructed specifically for this purpose. An existing compartment/cupboard may be utilised provided that it is modified to suit.
This appliance is not suitable for external installation.

3A.3 GAS SUPPLY

The gas meter – as supplied by the gas supplier – must be checked to ensure that it is of adequate size to deal with the maximum rated input of all the appliances that it serves. Installation pipes must be fitted in accordance with I.S. 813.
Pipe work from the meter to the appliance must be of adequate size. Pipes of a smaller size than the appliance gas inlet connection must not be used. The installation must be tested for soundness in accordance with I.S. 813.
If the gas supply serves more than one appliance, it must be ensured that an adequate supply is maintained to each appliance when they are in use at the same time.

3A.4 FLUE SYSTEM

The terminal should be located where the dispersal of combustion products is not impeded and with due regard for the damage and discoloration that may occur to building products located nearby. The terminal must not be located in a place where it is likely to cause a nuisance (see I.S. 813).
In cold and/or humid weather, water vapour will condense on leaving the terminal; the effect of such pluming must be considered.
If installed less than 2m above a pavement or platform to which people have access (including balconies or flat roofs) the terminal must be protected by a guard of durable material. The guard must be fitted centrally over the terminal. Refer to I.S. 813, when the terminal is 0.5 metres (or less) below plastic guttering or 1 metre (or less) below painted eaves.

3A.5 AIR SUPPLY

The following notes are intended for general guidance only. This appliance is a room-sealed, fan-flued boiler, consequently it does not require a permanent air vent for combustion air supply.
When installed in a cupboard or compartment, ventilation for cooling purposes is also not required.

3A.6 WATER CIRCULATION

Specific recommendations are given in I.S. 813. The following notes are for general guidance only.

3A.6.1 PIPEWORK

It is recommended that copper tubing be used in conjunction with soldered capillary joints.
Where possible pipes should have a gradient to ensure air is carried naturally to air release points and that water flows naturally to drain cocks.

Except where providing useful heat, pipes should be insulated to avoid heat loss and in particular to avoid the possibility of freezing. Particular attention should be paid to pipes passing through ventilated areas such as under floors, loft space, and void areas.

3A.6.2 AUTOMATIC BY-PASS

Vokera recommend that an automatic bypass is installed to ensure the required minimum flow-rate is achieved at all times. Additionally, the design of the system and its controls should ensure that an adequate temperature differential is met, and should be such that it prevents boiler 'cycling'.

3A.6.3 DRAIN COCKS

These must be located in accessible positions to facilitate draining of the appliance and all water pipes connected to the appliance.

3A.6.4 AIR RELEASE POINTS

These must be positioned at the highest points in the system where air is likely to be trapped. They should be used to expel trapped air and allow complete filling of the system.

3A.7 ELECTRICAL SUPPLY

The appliance is supplied for operation on 230V @ 50Hz electrical supply; it must be protected with a 3-amp fuse. The method of connection to the mains electricity supply must allow for complete isolation from the supply. The preferred method is by using a double-pole switch with a contact separation of at least 3mm. The switch must only supply the appliance and its corresponding controls, i.e. time clock, room thermostat, etc.

3A.8 MOUNTING ON A COMBUSTIBLE SURFACE

If the appliance is to be fitted on a wall of combustible material, a sheet of fireproof material must protect the wall.

3A.9 TIMBER FRAMED BUILDINGS

If the appliance is to be fitted in a timber framed building, it should be fitted in accordance with I.S. 813 and local

Building Regulations.
The Institute of Gas Engineers publication (IGE/UP/7) 'Guide for Gas Installations in Timber Frame Buildings' gives specific advice on this type of installation.

3A.10 INHIBITORS

Vokera recommend that an inhibitor - suitable for use with aluminium heat exchangers - is used to protect the boiler and system from the effects of corrosion and/or electrolytic action. The inhibitor must be administered in strict accordance with the manufacturers instructions*.

*Water treatment of the complete heating system - including the boiler - should be carried out in accordance with I.S. 813 and the Domestic Water Treatment Association's (DWTA) code of practice.

3A.11 APPLIANCE PIPEWORK CONFIGURATION

The appliance 'flow' and 'return' connections can be configured to suit the following:

1. Top outlet connection
2. Bottom outlet connection
3. Top (flow), bottom (return) connection
4. Top (return) bottom (flow) connection.

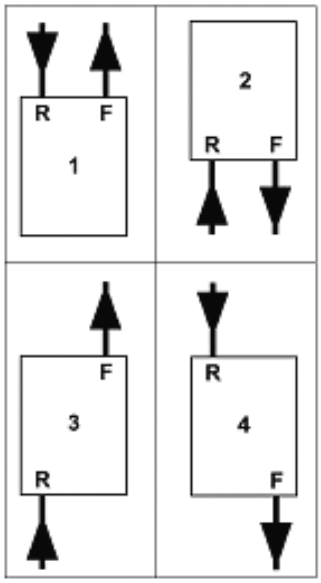

Fig. 5

3A.11.1 FEED AND VENT PIPEWORK

The feed and vent pipe work from the boiler to the F&E (Feed & Expansion) tank should be configured as shown in figure 4A using a 22mm combined feed and vent pipe.

NOTE

- The combined feed and vent pipe must rise continuously and be unrestricted.
- The diameter of the combined feed and vent pipe shall be 22mm.
- The minimum distance from the top of the boiler to the bottom of the F&E tank shall be no less than 1-metre, whilst the maximum distance shall be no greater than 30-metres.

The supply of water to the F&E tank should be taken from the mains water supply via a suitable float operated valve, whilst the supply from the F&E tank to the boiler/heating circuit (via the combined feed and vent pipe) shall be unrestricted.

3A.11.2 ALTERNATIVE CLOSE-COUPLED ARRANGEMENT

If necessary or if preferred, a close-coupled arrangement for the feed and expansion pipe work can be used as an alternative to a combined feed and vent pipe. The configuration of the close-coupled pipe work shall be as shown in figure 4B.

NOTE

- The distance between the cold feed pipe and the safety vent pipe shall be no more than 150mm
- The cold feed pipe must be inverted as shown in fig. 4B
- The safety vent pipe must be 22mm in diameter
- The cold feed pipe must be 15mm diameter
- The cold feed pipe and safety vent pipe must both rise continuously and be unrestricted.
- The minimum distance from the top of the boiler to the bottom of the F&E tank shall be no less than 1-metre, whilst the maximum distance shall be no greater than 30-metres.
- The distance between the bottom of the F&E tank and the highest point of the safety vent pipe must be no less than 500mm.

The supply of water to the F&E tank should be taken from the mains water supply via a suitable float operated valve, whilst the supply from the F&E tank to the boiler/heating circuit (via the cold feed pipe) shall be unrestricted.

3A.11.3 REMOTE CONNECTION

It's permissible to connect the feed and vent pipe work remote from the appliance, providing it's connected to the primary heating pipe work as shown in figures 4C/4D.

NOTE

The instructions for a combined feed and vent installation (3A.11.1) or close-coupled arrangement (3A.11.2) still apply when connecting the feed and vent pipe work remote from the appliance.

3A.12 DECLARATION OF CONFORMITY

A Declaration of Conformity (as defined in I.S. 813) must be provided on completion of the installation.
A copy of the declaration must be given to the responsible person and also to the gas supplier if required.

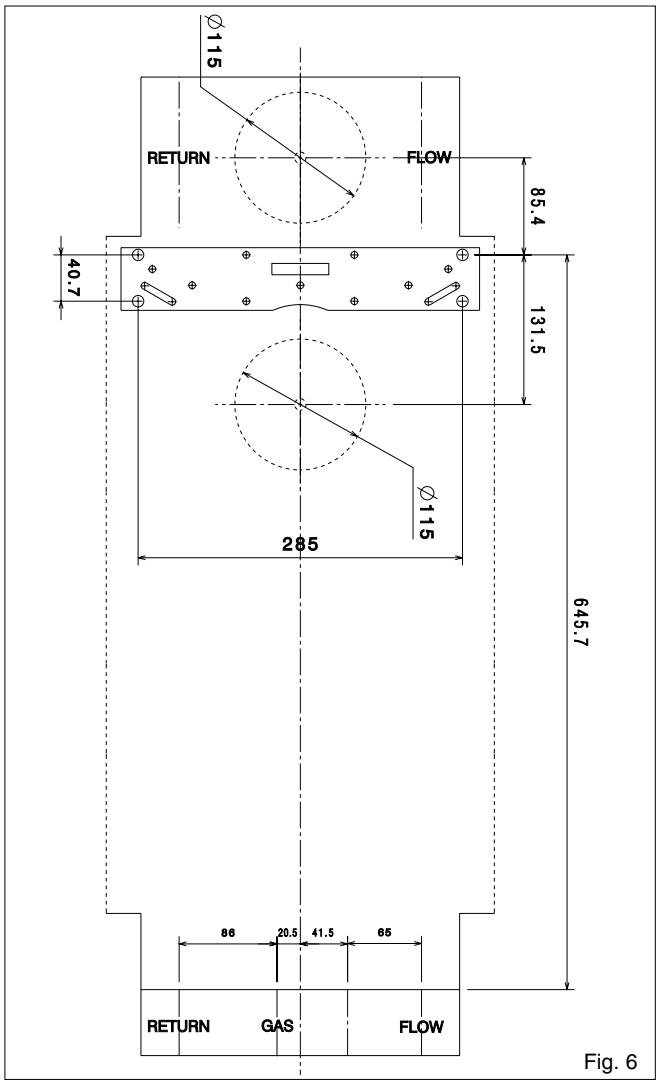

Fig. 6

4.1 DELIVERY
Although the weight of the appliance is 25kg, depending on site conditions, it may be necessary for two people to lift and attach the appliance to its mounting. The appliance is contained within a heavy-duty cardboard carton. Lay the carton on the floor with the writing the correct way up.

4.2 CONTENTS
Contained within the carton is:
- The boiler
- The wall bracket
- Template
- Flue outlet blanking plate
- An accessories pack containing appliance service connections and washers
- The instruction pack containing the installation & servicing instructions, user instructions, guarantee registration card, and a 3-amp fuse.

4.3 UNPACKING
At the top of the carton pull both sides open – do not use a knife – unfold the rest of the carton from around the appliance, carefully remove all protective packaging from the appliance, and lay the accessories etc. to one side. Protective gloves should be used to lift the appliance, the appliance back-frame should be used for lifting points.

4.4 PREPARATION FOR MOUNTING THE APPLIANCE
The appliance should be mounted on a smooth, vertical, non-combustible surface, which must be capable of supporting the full weight of the appliance. Care should be exercised when determining the position of the appliance with respect to hidden obstructions such as pipes, cables, etc.

When the position of the appliance has been decided – using the template supplied – carefully mark the position of the wall- mounting bracket (see fig. 6) and flue-hole (if applicable).

4.5 FITTING THE FLUE
The top flue outlet permits both horizontal and vertical flue applications to be considered, alternatively, the Vokera twin flue system can be utilised if longer flue runs are required.
If the rear-flue configuration is preferred, the appliance can easily be re-configured to a rear-flue outlet, however the rear-flue terminal kit must be used for such applications.

RE-CONFIGURING THE FLUE OUTLET
The appliance is supplied configured to suit top outlet flue applications; to re-configure the flue outlet to suit a rear flue outlet application, proceed as follows:
- Fit the 'flue outlet blanking plate' (supplied within the carton) to the top flue outlet using the screw on the air box (fig. 10).
- Remove the screws that secure the rear flue blanking plate; discard the plate and the gasket (fig. 11), retain the screws as these will be required to secure the rear flue terminal to the appliance.
- Refer to the instructions at 4.5.1.2 for detailed advice on how to fit the rear flue outlet to the appliance.

4.5.1 CONCENTRIC HORIZONTAL FLUE
(For concentric vertical flue, see 4.5.2).
(For twin flue applications, see 4.5.3).
The appliance can be used with either the Vokera condensing 60/100mm concentric flue system or the optional 80/125mm concentric flue system.

NOTE
These instructions relate **only** to the Vokera condensing 60/100mm concentric flue system. For specific details on the installation of the 80/125mm concentric flue system please refer to the instructions supplied.

The appliance flue outlet elbow can be rotated through 360º on its vertical axis. In addition the flue may be extended from the outlet elbow in the horizontal plane (see 2.8). A reduction must also be made to the maximum length (see table below) when additional bends are used.

Reduction for additional bends

Bend	Reduction in maximum flue length for each bend
45° bend	0.5 metre
90° bend	1.0 metre

Horizontal flue terminals and accessories

Part No.	Description	Length
520	Horizontal flue kit	900 mm
521	Telescopic flue kit	350 /530 mm
522	Plume management kit	1370 mm
523	90-degree bend	N/A
524	45-degree bends (pair)	N/A
525	500mm extension	500mm
526	1000mm extension	1000 mm
527	2000m extension	2000 mm
528	Telescopic extension	350 /730 mm
529	Wall bracket pack (5)	208mm
533	Rear flue outlet kit	

Using the template provided, mark and drill a 115mm hole for the passage of the flue pipe. The hole should be drilled to ensure any condense fluid that forms, is allowed to drain back to the appliance (see fig. 7A).
The fixing holes for the wall-mounting bracket should now be drilled and plugged, an appropriate type and quantity of fixing should be used to ensure that the bracket is mounted securely. Once the bracket has been secured to the wall, mount the appliance onto the bracket.

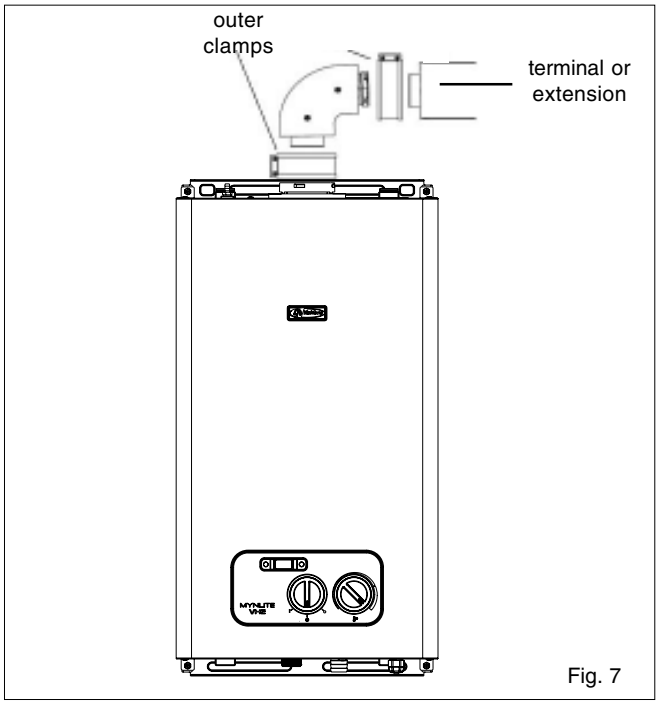

Fig. 7

FITTING THE HORIZONTAL FLUE KIT

Carefully measure the distance from the centre of the appliance flue outlet to the edge of the finished outside wall (dimension X). Add 65mm to dimension X to give you dimension Y (see fig 7A). Measure dimension Y from the terminal end of the concentric flue pipe and cut off the excess ensuring any burrs are removed. Pass the concentric flue pipe through the previously drilled hole. Fit the flue bend to the boiler flue outlet and insert the concentric flue pipe into the flue bend ensuring the correct seal is made. Using the clamp, gasket and screws supplied, secure the flue bend to the appliance flue spigot.

NOTE

Fit the internal (white) trim to the flue assembly prior to connecting the flue pipe to the bend.

You must ensure that the entire flue system is properly supported and connected.

Seal the flue assembly to the wall using cement or a suitable alternative that will provide satisfactory weatherproofing. The exterior trim can now be fitted.

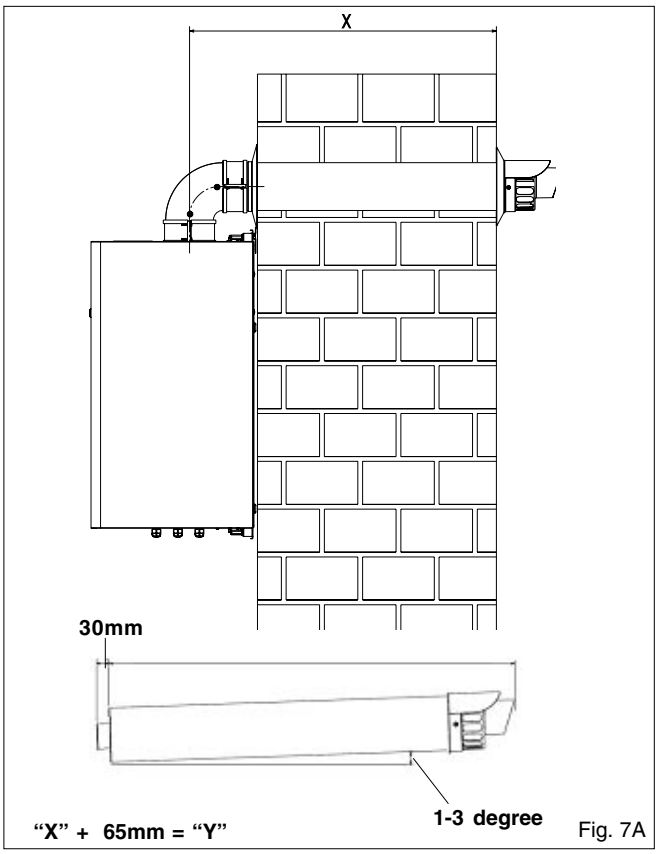

Fig. 7A

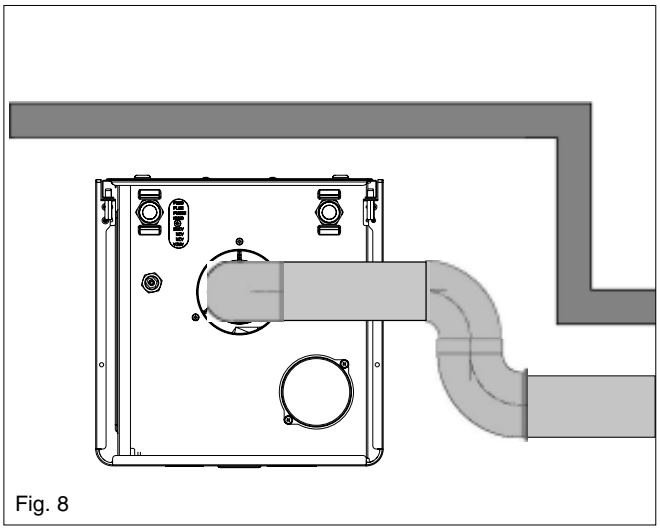
Fig. 8

4.5.1.1 EXTENDING THE FLUE

Connect the bend – supplied with the terminal kit – to the top of the boiler using clamp (supplied) see fig. 7. The additional bends & extensions have push-fit connections, care should be taken to ensure that the correct seal is made when assembling the flue system. Connect the required number of flue extensions or bends (up to the maximum equivalent flue length) to the flue terminal (see fig. 7 & 8).

The flue system should have a minimum of 1º; maximum of 3º rise from the boiler to outside, to ensure any condense fluid that forms, is allowed to drain back to the appliance.

NOTE

When cutting an extension to the required length, you must ensure that the excess is cut from the plain end of the extension (see fig. 7 & 8). Remove any burrs, and check that all seals are located properly.

You must ensure that the entire flue system is properly supported and connected.

Seal the flue assembly to the wall using cement or a suitable alternative that will provide satisfactory weatherproofing. The interior and exterior trim can now be fitted.

4.5.1.2 FITTING THE REAR FLUE (fig. 9) (rear flue outlet only)

Using the template provided, mark and drill a 115mm hole for the passage of the flue pipe. The hole should be drilled LEVEL to ensure any condense fluid that forms, is allowed to drain back to the appliance.

The fixing holes for the wall-mounting bracket should now be drilled and plugged, an appropriate type and quantity of fixing should be used to ensure that the bracket is mounted securely.

Once the bracket has been secured to the wall, attach the rear flue terminal to the appliance (using the previously retained screws) and fix the telescopic terminal to the correct length (wall thickness) ensuring that the terminal will protrude through the wall by the correct distance.

At this point, lift the appliance and carefully insert the terminal into and through the wall, ensuring that the holes in the appliance back frame are aligned with the studs on the wall bracket.

Fig. 9

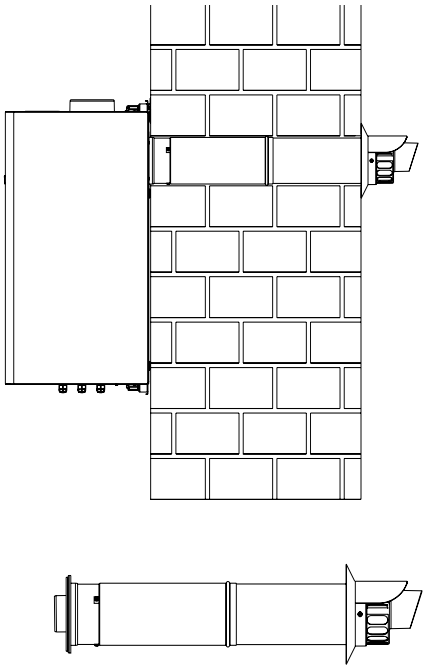

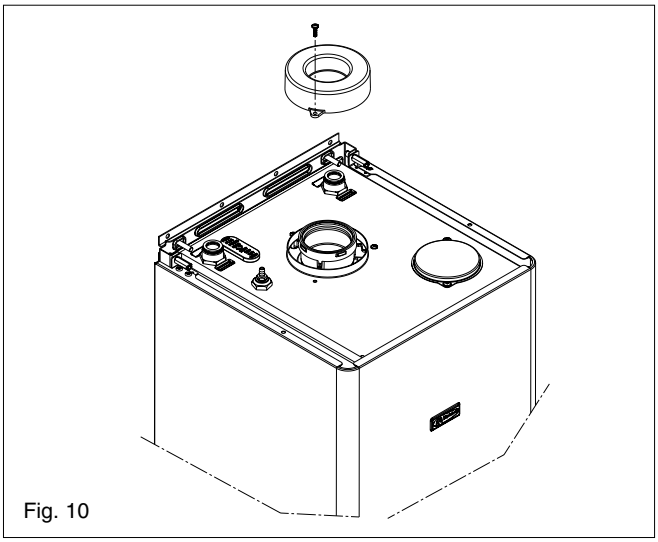

Fig. 10

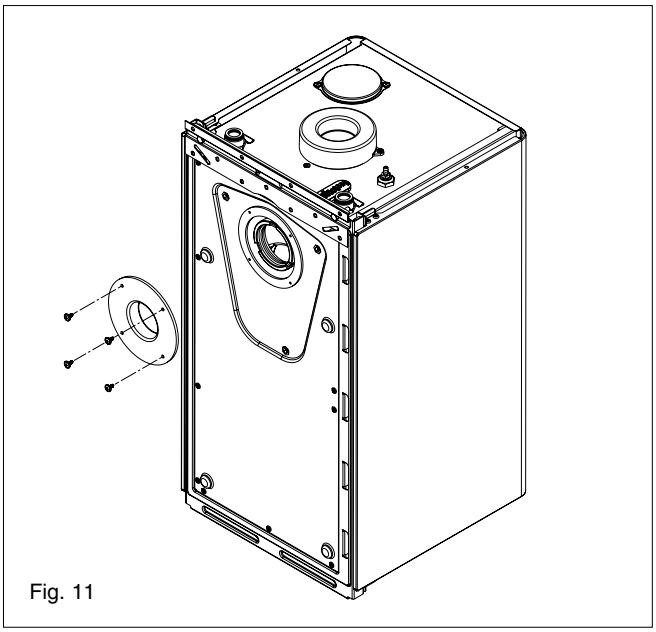

Fig. 11

Using the screws and washers provided, secure the appliance onto the wall bracket and tighten with a suitable spanner.
Seal the flue assembly to the wall using cement or a suitable alternative that will provide satisfactory weatherproofing. The exterior wall trim can now be fitted.

4.5.2 CONCENTRIC VERTICAL FLUE

The appliance can be used with either the Vokera condensing 60/100mm concentric flue system or the optional 80/125mm concentric flue system.

NOTE
These instructions relate **only** to the Vokera condensing 60/100mm concentric flue system. For specific details on the installation of the 80/125mm concentric flue system please refer to the instructions supplied.
The vertical flue terminal can be connected directly to the appliance flue outlet. Alternatively, an extension or bend can be connected to the appliance flue outlet if desired (see 4.4.2), however if additional bends are fitted, a reduction must be made to the maximum flue length (see table below).

Reduction for bends

Bend	Reduction in maximum flue length for each bend
45° bend	0.5 metre
90° bend	1.0 metre

Vertical flue terminal and accessories

Part No.	Description	Min-Max length
530	Vertical flue terminal	1000 mm
531	Pitched roof flashing plate	N/A
532	Flat roof flashing plate	N/A
523	90-degree bend	N/A
524	45-degree bends (pair)	N/A
525	500mm extension	500mm
526	1000mm extension	1000 mm
527	2000mm extension	2000 mm
528	Telescopic extension	350/730mm
529	Wall bracket pack (5)	208mm

Using the dimensions given in fig. 12 as a reference, mark and cut a 115mm hole in the ceiling and/or roof.

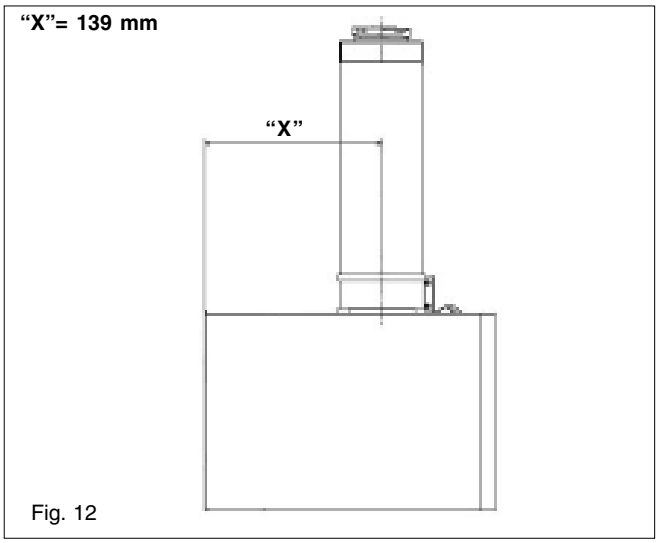

Fig. 12

Fit the appropriate flashing plate to the roof and insert the vertical flue terminal through the flashing plate from the outside, ensuring that the collar on the flue terminal fits over the flashing.
The fixing holes for the wall-mounting bracket should now be drilled and plugged, an appropriate type and quantity of fixing should be used to ensure that the bracket is mounted securely. Once the bracket has been secured to the wall, mount the appliance onto the bracket.

IMPORTANT
The vertical flue terminal is 1.0 metre in length and cannot be cut; therefore it may be necessary to adjust the height of the appliance to suit or use a suitable extension.
Connect the vertical flue assembly to the boiler flue spigot using the 100mm clip, gasket & screws (supplied), ensuring the correct seal is made. The flue support bracket (supplied with the vertical flue kit) can now be fitted.
If the vertical flue requires extension/s or additional bend/s, connect the required number of flue extensions or bends (up to the maximum equivalent flue length) between the boiler and vertical flue assembly (see fig. 8).
Ensure that any horizontal sections of the flue system have a minimum 1º; maximum 3º fall back to the boiler (1º = 17mm per 1000mm).

NOTE
When cutting an extension to the required length, you must ensure that the excess is cut from the plain end of the extension (see fig. 8). Remove any burrs, and check that any seals are located properly.
You must ensure that the entire flue system is properly supported and connected.

4.5.3 TWIN FLUE SYSTEM

The Vokera twin flue system enables greater flue distances to be achieved (see 4.4.2) than that of a concentric flue system. It can be used for horizontal or vertical applications, however the twin flue system must be converted to the dedicated concentric flue kit for termination. It is essential that the installation of the twin flue system be carried out in strict accordance with these instructions.

GUIDANCE NOTES ON TWIN FLUE INSTALLATION

- The flue must have a have a minimum 1º; maximum 3º (1º = 17mm per 1000mm) fall back to the appliance to allow any condensate that may form in the flue system to drain via the condensate drain. Consideration must also be given to the fact that there is the possibility of a small amount of condensate dripping from the terminal.
- Ensure that the entire flue system is adequately supported, use at least one bracket for each extension.
- The entire flue system must be adequately insulated to maintain heat within the flue system thereby reducing the possibility of condensate production.
- As the exhaust outlet pipe can reach very high temperatures it must be protected to prevent persons touching the hot surface.
- The condensate drain pipe must be connected in accordance with building regulations.

Reduction for bends

Bend	Reduction in maximum flue length for each bend
45° bend	1.0 metre
90° bend	1.0 metre

Twin flue accessories

Part No.	Description	Length
0225805	Horizontal flue terminal	1.0 metre
0225810	Vertical flue terminal	1.0 metre
359	Twin adapter kit	N/A
531	Pitched roof flashing plate	N/A
532	Flat roof flashing plate	N/A
0225815	Condensate drain kit	N/A
0225820	0.25m extension (pair)	250mm
0225825	0.5m extension (pair)	500mm
0225830	1.0m extension (pair)	1000mm
0225835	2.0m extension (pair)	2000mm
0225840	45º bend (pair)	N/A
0225845	90º bend (pair)	N/A
0225850	Twin bracket (5)	N/A
0225855	Single bracket (5)	N/A

MOUNTING THE BOILER

The fixing holes for the wall-mounting bracket should now be drilled and plugged, an appropriate type and quantity of fixing should be used to ensure that the bracket is mounted securely. Once the bracket has been secured to the wall, mount the appliance onto the bracket.

4.5.3.1 INSTALLATION OF TWIN ADAPTOR KIT (fig. 13 & 14)

- Insert the exhaust connection manifold **(A)** onto the appliance flue outlet.
- Remove the blanking plate (located to the right of the appliance flue outlet) and – using the same screws – install the air inlet plate **(B)**.
- Using the hole in the exhaust connection manifold as a guide, drill a 3mm hole in the appliance flue spigot and secure the exhaust manifold connection to the flue spigot using the screw provided **(C).**
- Using the two holes in the air inlet plate as a guide, drill a 3mm hole in each and secure the air inlet pipe/bend using the screws provided.

The twin flue pipes extensions and accessories can now be installed by pushing together (the plain end of each extension or bend should be pushed approximately 50mm into the female socket of the previous piece).

Fig. 13

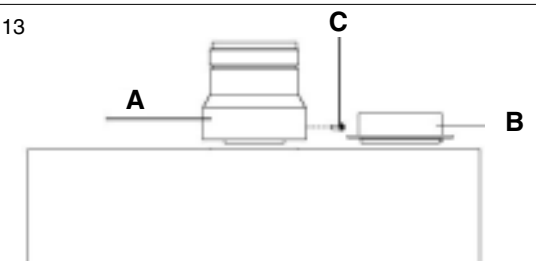

Fig. 14

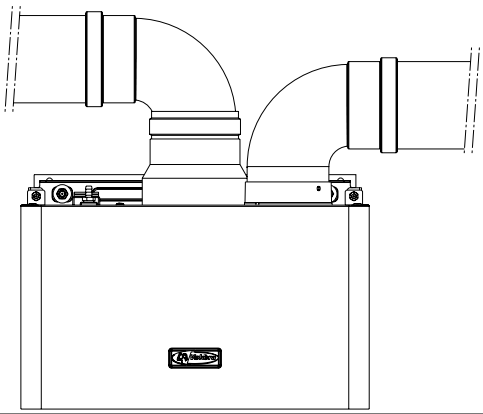

4.5.3.2 HORIZONTAL TERMINATION (fig. 15)

The twin flue system must be converted to the dedicated concentric flue kit for termination.

- The horizontal terminal is supplied with a built-in converter box and cannot be shortened.
- A 130mm hole is required for the passage of the concentric terminal through the wall.
- The air inlet pipe must always be level with or below, that of the exhaust pipe.

Depending on site conditions it may be preferable to install the terminal assembly prior to fitting the twin flue pipes.

Mark and drill a level 130mm hole for the passage of the horizontal flue terminal. Insert the terminal assembly into the flue hole.

Push-fit the twin flue pipes onto the concentric to twin converter box ensuring that the exhaust pipe connects to the exhaust connection on the concentric to twin converter. If necessary cut the plain ends (male) of the twin flue pipes to allow connection to the concentric to twin converter.

NOTE

before cutting twin flue pipes ensure allowances have been made for connection onto the previous piece and onto the concentric to twin converter. The last twin Flue pipes must be pushed 50mm onto the male spigots of the concentric to twin converter.

NOTE
Seal the flue terminal assembly to the wall using cement or a suitable alternative that will provide satisfactory weatherproofing. The interior and exterior trim can now be fitted.

4.5.3.3 VERTICAL TERMINATION (fig. 16)

The twin flue system must be converted to the dedicated concentric flue kit for termination.

- The vertical terminal is supplied with a built-in converter box and cannot be shortened.
- A 130mm hole is required for the passage of the concentric terminal through the ceiling and/or roof.

Depending on site conditions it may be preferable to install the terminal assembly prior to fitting the twin flue pipes.
Fit the appropriate flashing plate to the roof and insert the vertical flue terminal through the flashing plate from the outside, ensuring that the collar on the flue terminal fits over the flashing.
Push-fit the twin flue pipes onto the concentric to twin converter ensuring that the exhaust pipe connects to the exhaust connection on the concentric to twin converter.
If necessary cut the plain ends (male) of the twin flue pipes to allow connection to the concentric to twin converter.

NOTE

- Before cutting twin flue pipes ensure allowances have been made for connection onto the previous piece and onto the concentric to twin converter. The last twin flue pipes must be pushed 50mm onto the male spigots of the concentric to twin converter.
- You must ensure that the entire flue system is properly supported and connected.
- Ensure that any horizontal sections of pipe have a 1º fall towards the appliance (17mm per 1000mm).

4.6 CONNECTING THE GAS AND WATER

The appliance is supplied with a 15mm service valve for the gas connection and 22mm copper to brass adapters for the flow and return connections. The service valve is of the compression type. The accessories pack also contains sealing washers etc, for use with the service valve and copper connections.
When connecting pipe work to the valves, tighten the compression end first then insert the sealing washers before tightening the valve to the appliance.

NOTE
It will be necessary to hold the valve with one spanner whilst tightening with another.

4.6.1 GAS (fig. 6)

The appliance is supplied with a 15mm service valve, connect a 15mm pipe to the inlet of the valve and tighten both nuts.

NOTE
It will be necessary to calculate the diameter of the gas supply pipe to ensure the appliance has an adequate supply of gas.

4.6.2 FLOW & RETURN (fig. 6)

The appliance is supplied with 22mm copper to brass adapters for the flow and return service connections.

There are two connections at the top of the boiler and two connections at the bottom; the boiler is supplied with the

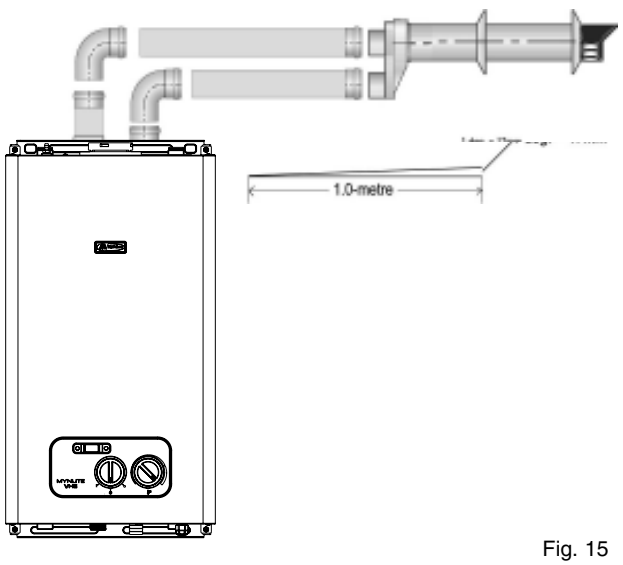

Fig. 15

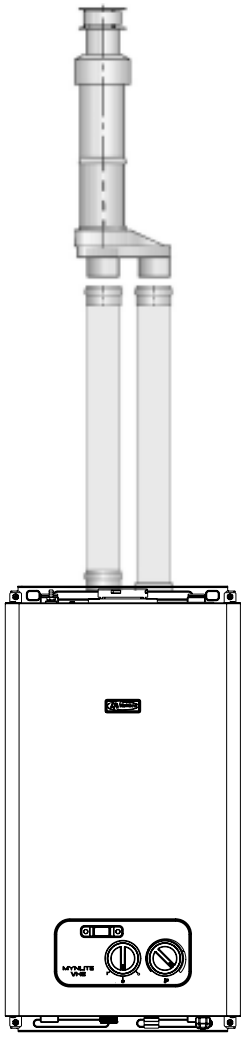
Fig. 16

top connections capped off, however these can be removed to allow pipe work configurations as detailed in 3.11. Depending on system requirements, it may necessary to increase the size of the flow & return pipe work after the service connections.

4.6.3 CONDENSE PIPE

During normal operation the boiler produces condense which is collected in a trap located in the lower part of the boiler. A flexible pipe (condense outlet pipe) is connected to the outlet of the trap. The flexible pipe must be connected to a plastic waste pipe only. The plastic waste pipe must have a minimum of a 3º fall towards the drain. Any external run of pipe should be insulated to prevent the risk of freezing.

CONNECTING THE CONDENSATE OUTLET

Gently pull the condense outlet pipe down from its location inside the boiler until approximately 100mm protrudes from the underside of the boiler. Connect a suitable plastic (not copper) pipe (no less than 20mm diameter) to the outlet pipe and ensure it discharges in accordance with building regulations or other rules in force.

4.7 ELECTRICAL CONNECTIONS

The electrical supply must be as specified in section 3/3A. A qualified electrician should connect the electrical supply to the appliance. If controls – external to the appliance – are required, a competent person must undertake the design of any external electrical circuits, please refer to section 8 for detailed instructions. ANY EXTERNAL CONTROL OR WIRING MUST BE SERVED FROM THE SAME ISOLATOR AS THAT OF THE APPLIANCE. The supply cable from the isolator to the appliance must be 3-core flexible sized 0.75mm to BS 6500 or equivalent. Wiring to the appliance must be rated for operation in contact with surfaces up to 90°C.

4.7.1 CASING REMOVAL (fig. 17)

To gain internal access to the appliance you must first remove the casing, proceed as outlined below:

- Locate and remove the 4-elongated nuts at corner of the on the casing using a screwdriver or suitable spanner/ socket.
- Draw the casing forwards to disengage it from the locating studs and then remove.
- Store the casing and nuts safely until required. Re-fit in the reverse order.

WARNING

The casing forms the 'room-sealed' element of the appliance; therefore you must ensure that the seal is in a good condition, that the casing is correctly located, and that all 4-nuts are correctly fitted and tightened to ensure the necessary seal to allow safe operation of the appliance.

4.7.2 APPLIANCE TERMINAL BLOCK

The appliance terminal block is located on the rear of the control fascia. Remove the casing as described in 4.7.1. Locate and remove the two screws from the control panel (fig. 18). Gently pull the control panel forwards and down. Locate the terminal block cover (see fig. 19).

NOTE

The appliance comes with a factory fitted link-wire ('TA') and supply flex to allow basic operation of the boiler once the circulating pump has been connected. If it is anticipated that external controls will be required please refer to the wiring diagrams in section 8 for more detailed information.

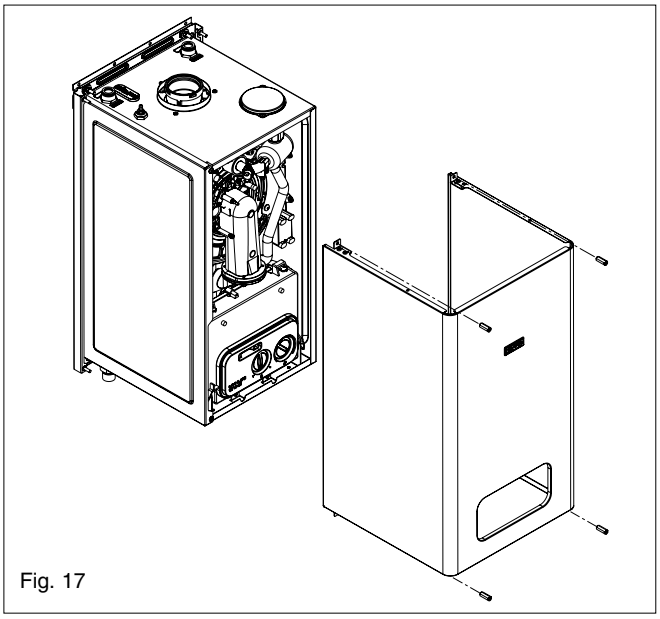

Fig. 17

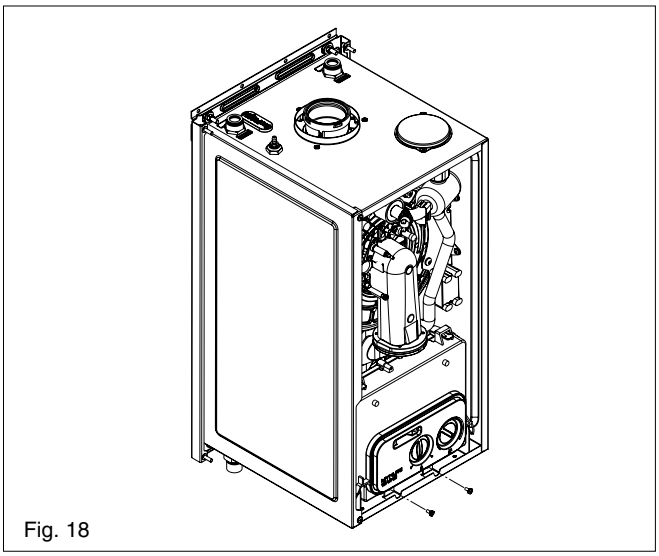

Fig. 18

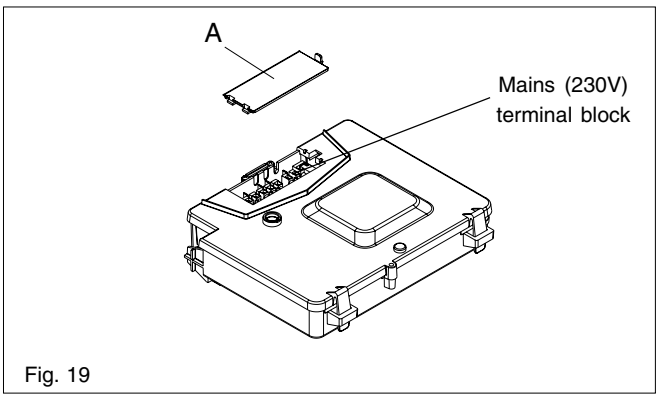

Fig. 19

4.7.3 CONNECTING THE MAINS (230V) INPUT (see fig. 21)

Locate and remove the terminal block cover (230V) pressing clip **(A)**. Pass the supply cable first through the cable anchorage point and then through cable glands.
Connect the supply cable wires (LIVE, NEUTRAL, & EARTH) to their corresponding terminals (L, N, & E) on the appliance terminal block. When connecting the EARTH wire, ensure that it's left slightly longer that the others, this will prevent strain on the EARTH wire should the cable become taut.

4.7.4 CONNECTING THE PUMP (230V) OUTPUT (fig. 21)

Pass the pump cable first through the cable anchorage point and then through the cable glands.
Connect the pump cable wires (LIVE, NEUTRAL, & EARTH) to their corresponding terminals (Live = brown, Neutral = blue, & Earth = green/yellow) on the appliance terminal block. When connecting the EARTH wire, ensure that it's left slightly longer that the others, this will prevent strain on the EARTH wire should the cable become taut.

Do not remove the link wire unless additional external controls are to be fitted (see section 8). The securing screw on the cable anchorage should now be tightened. This must be done before the control fascia is re-fitted in the upright position. The appliance casing and the screws, can now be re-fitted.

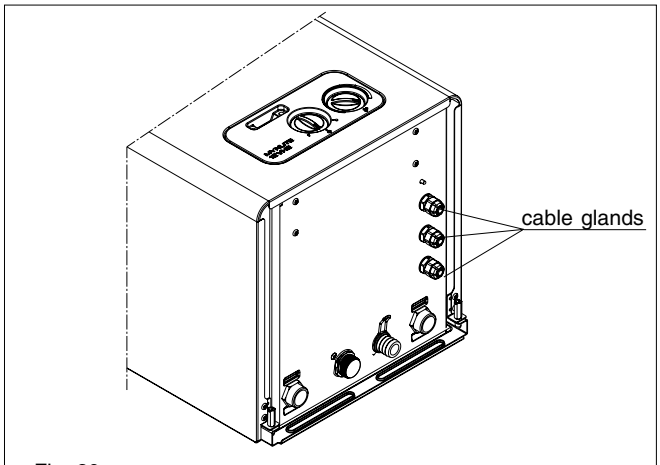

Fig. 20

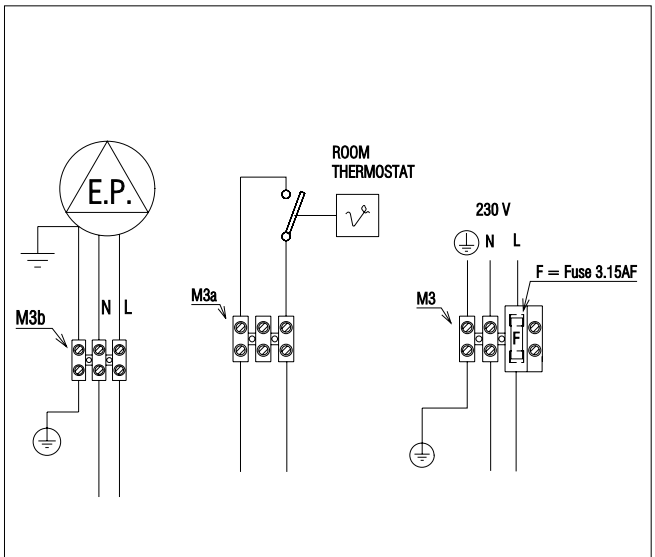

Fig. 21

5.1 GAS SUPPLY INSTALLATION

Inspect the entire installation including the gas meter, test for tightness and purge. Refer to BS 6891 (I.S. 813 in ROI) for specific instruction.

5.2 THE HEATING SYSTEM

The appliance contains components that may become damaged or rendered inoperable by oils and/or debris that are residual from the installation of the system, consequently it is essential that the system be flushed in accordance with BS 7593 Code of Practice and the following instructions.

5.3 INITIAL FILLING OF THE SYSTEM

Remove appliance casing as described in 4.7.1, identify the automatic air release valves (AAV) and loosen the dust cap/s by turning the cap anti-clockwise one full turn.
Ensure all manual air release valves located on the heating system are closed. Proceed to fill the system via the feed and expansion tank and begin venting all manual air release valves, starting at the lowest first.
Once the system has been filled. Inspect the system for water soundness, rectifying any leaks.

5.3.1 MANUAL AIR RELEASE (Fig. 22)

When the boiler has been filled for the first time or the system has been drained and refilled, it will be necessary to release any air that may have become trapped within the appliance heat exchanger.
Slacken the bleed screw until water is released and then close.
IMPORTANT, THERE ARE NO OTHER MANUAL AIR RELEASE VALVES LOCATED ON THE APPLIANCE.

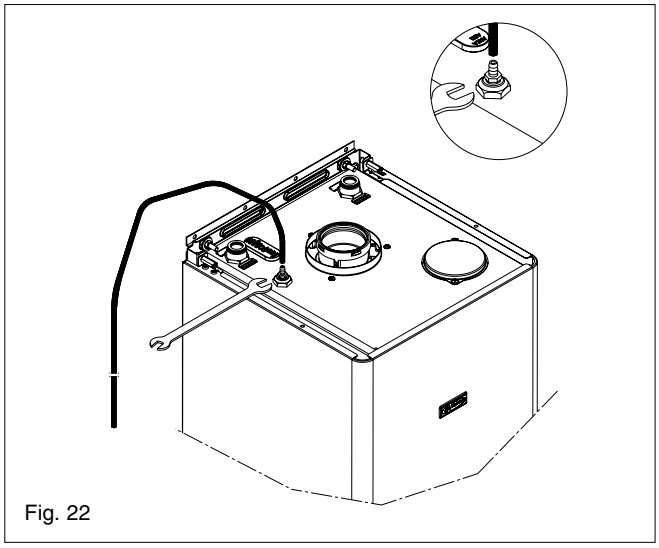

Fig. 22

5.4 INITIAL FLUSHING OF THE SYSTEM

The whole of the heating system must be flushed both cold and hot as detailed in 5.8. Open all radiator and/or heating zone valves.
Drain the boiler and system from the lowest points.
Open the drain valve full bore to remove any installation debris from the boiler prior to lighting.
Refill the boiler and heating system as described in 5.3.

5.5 PRE-OPERATION CHECKS

Before attempting the initial lighting of the appliance, the following checks must be carried out:

- Ensure all gas service valves from the meter to the appliance are open and the supply pipe has been properly purged;
- Ensure the proper electrical checks have been carried out, (see 7.8) particularly continuity, polarity, and resistance to earth;
- Ensure the 3 AMP fuse – supplied with the appliance – has been fitted.
- Ensure the system has been properly filled and vented.
- Ensure the flue system has been fitted properly and in accordance with the instructions.

out, (see 7.8) particularly continuity, polarity, and resistance to earth;
- Ensure the 3 AMP fuse – supplied with the appliance – has been fitted.
- Ensure the system has been properly filled and vented.
- Ensure the flue system has been fitted properly and in accordance with the instructions.

5.6 INITIAL LIGHTING

Ensure the electrical supply to the appliance is switched on. Ensure any external controls are switched to an 'ON' position and are calling for heat.
Move the selector switch to the ON position, the appliance will now operate as described in 1.2.
Should the appliance fail to ignite, refer to 5.6 and/or section 7 (mode of operation & faultfinding).

NOTE

When power is restored to the PCB and/or the PCB is powered for the first time, the appliance will enter a 2-minute purge cycle whereby only the pump will run for 15-seconds then off for 15-seconds.

5.7.1 CHECKING GAS PRESSURE AND COMBUSTION ANALYSIS

The appliance is factory set and requires no additional adjustment once installed. However to satisfy the requirements of GSIUR 26/9 (I.S. 813 ROI), it will be necessary to gas rate the appliance using the gas meter that serves the appliance.
If the installation does not include a gas meter (for example LPG) and there are no means by which to calculate the gas rate, then a combustion analysis test must be carried out in accordance with BS 7967 (UK) to ensure the appliance is left working safely and correctly.
Additionally, if the gas valve has been adjusted, replaced, or the appliance has been converted for use with another gas type, then it becomes necessary to carry out a combustion analysis/check to ensure that correct combustion is occurring.
If there are no means to gas rate the appliance and/or carry out a combustion analysis check, then it will not be possible to complete the commissioning procedure.
Details on how to carry out the combustion analysis can be found in section 7.

IMPORTANT

It's imperative that a sufficient dynamic – gas – pressure is maintained at all times. Should the dynamic gas pressure fall below an acceptable level, the appliance may malfunction or sustain damage.

5.8 FINAL FLUSHING OF THE HEATING SYSTEM

The system shall be flushed in accordance with BS 7593 Code of Practice (I.S. 813 ROI). Cleansers or chemicals used, must be suitable for Aluminium heat exchangers and shall be from a reputable manufacturer and shall be administered in strict accordance with the manufacturers' instructions.

NOTE

Chemicals used to cleanse the system and/or inhibit corrosion must be pH neutral, i.e. they should ensure that the level of the pH in the system water remains neutral. Premature failure of certain components can occur if the level of pH in the system water is out-with normal levels.

5.8.1 INHIBITORS

See Section 3 "General Requirements".

5.9 SETTING THE BOILER OPERATING TEMPERATURE

The flow outlet temperature can be adjusted between 40 °C - 78 °C via the Heating thermostat knob (see fig.1).

5.10 REGULATING THE CENTRAL HEATING SYSTEM

Fully open all radiator and circuit valves and run the appliance for both heating and hot water until heated water is circulating. If conditions are warm remove any thermostatic heads. Adjust radiator return valves and any branch circuit return valves until the individual return temperatures are correct and are approximately equal.

5.11 FINAL CHECKS

- ENSURE ALL TEST NIPPLES ON THE APPLIANCE GAS VALVE ARE TIGHT AND CHECKED FOR TIGHT NESS.
- ENSURE THE APPLIANCE FLUE SYSTEM IS FITTED CORRECTLY AND IS PROPERLY SECURED.
- ENSURE ALL PIPE WORK IS RE-CHECKED FOR SOUNDNESS.
- RE-FIT APPLIANCE CASING.
- COMPLETE BENCHMARK CHECKLIST.

FOR UK ONLY

Complete details of the boiler, controls, installation and commissioning in the Benchmark checklist at the back of this book. It is important that the Benchmark checklist is correctly completed and handed to the user. Failure to install and commission the appliance to the manufacturers instructions may invalidate the warranty.

5.12 INSTRUCTING THE USER

Hand over all documentation supplied with this appliance – including these instructions – and explain the importance of keeping them in a safe place.

Explain to the user how to isolate the appliance from the gas, water and electricity supplies, and the locations of all drain points. Show the user how to operate the appliance and any associated controls correctly.

Show the user the location of any isolating valves and the location of all manual air release points.

Explain to the user how to turn off the appliance for both long and short periods and advise on the necessary precautions to prevent frost damage.

Explain to the user that for continued safe and efficient operation, the appliance must be serviced annually by a competent person.

IMPORTANT

To validate the appliance warranty, it's necessary to register the appliance details with us. The warranty can be registered in several ways:

- By completing the warranty registration card and posting to us using the pre-paid envelope supplied
- Online at: vokera.co.uk
- For UK residents by calling: 0870 607 0281
- For ROI residents by calling: 1850 221121.

6.1 GENERAL

To ensure the continued safe and efficient operation of the appliance, it is recommended that it is checked and serviced at regular intervals. To ensure correct and safe operation of the appliance, it is essential that any worn or failed component be replaced only with a **genuine Vokera spare part**. It should be remembered that although certain generic components may look similar, they will be specific to an individual appliance or product range. Use of non-genuine Vokera spare parts could invalidate your warranty and may pose a potential safety hazard. The frequency of servicing will depend upon the particular installation conditions, but in general, once per year should be sufficient. It is the law that any servicing work is carried out by competent person such as a Vokera engineer, an approved service agent, British Gas,
CORGI registered personnel or other suitably qualified personnel. The following instructions apply to the appliance and its controls, but it should be remembered that the central heating and the domestic hot water systems would also require attention from time to time.

6.2 ROUTINE ANNUAL SERVICING

- Check the operation of the appliance and ensure it functions as described in section 7.
- Compare the performance of the appliance with its design specification. The cause of any noticeable deterioration should be identified and rectified without delay.
- Thoroughly inspect the appliance for signs of damage or deterioration especially the flue system and the electrical apparatus.
- Check and adjust – if necessary – all burner pressure settings (see 7.4).
- Carry out an analysis of the flue gases (see 7.5), and visually check the condition of the entire flue assembly.
- Compare the results with the appliance design specification. Any deterioration in performance must be identified and rectified without delay.
- Check that the burner and main heat exchanger are clean and free from any debris or obstruction.
- Check and clean – if necessary – the condense trap to ensure correct operation.

6.3 REPLACEMENT OF COMPONENTS

Although it is anticipated that this appliance will give years of reliable, trouble free service, the life span of components will be determined by factors such as operating conditions and usage. Should the appliance develop a fault, the fault finding section will assist in determining which component is malfunctioning.

6.4 COMPONENT REMOVAL PROCEDURE

To remove a component, access to the interior of the appliance is essential and it's therefore necessary to remove the appliance casing (4.7). Isolate the appliance from the electrical supply and remove the fuse. And when necessary, drain the appliance and heating system. Ensure some water absorbent cloths are available to catch any residual water that may drip from the appliance or removed component. Undertake a complete commissioning check as detailed in section 5, after replacing any component.

ALWAYS TEST FOR GAS TIGHT NESS IF ANY GAS CARRYING COMPONENTS HAVE BEEN REMOVED OR DISTURBED.

6.4.1 AIR BOX SIDE COVER REMOVAL (fig. 23)

To gain internal access to the appliance you must first remove the casing, proceed as outlined below:

- Locate and remove the 4-elongated nuts at corner of the on the casing using a screwdriver or suitable spanner/ socket.
- If it's necessary to remove the air box side cover, locate and remove the 2 securing screws.

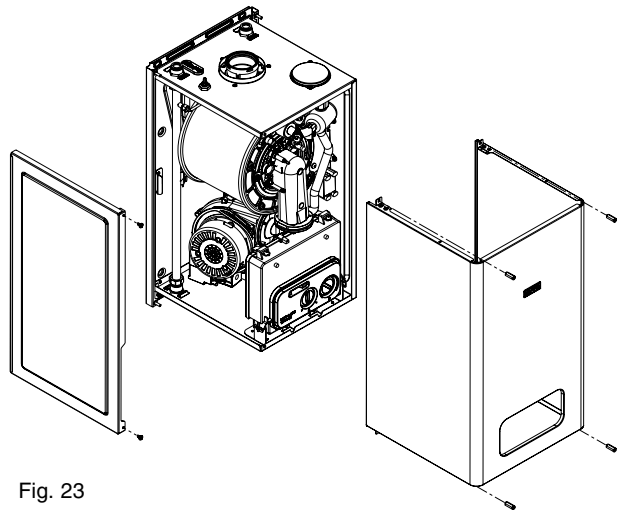

Fig. 23

6.5 AUTOMATIC AIR RELEASE VALVE (fig. 24)

Carry out component removal procedure as described in 6.4. Remove the drain pipe **(A)**. Unscrew the top AAV. Replace in the reverse order. Loctite or similar should be used as a thread sealant for the AAV.

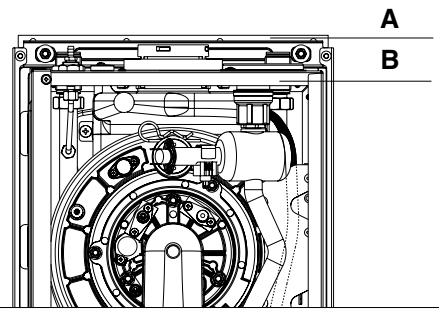

Fig. 24

6.6 PRIMARY THERMISTOR (fig. 1)

Carry out component removal procedure as described in 6.4. Unclip the primary thermistor from the flow outlet pipe. Disconnect thermistor electrical plug. Replace in the reverse order.

6.7 RETURN THERMISTOR (fig. 1)

Carry out component removal procedure as described in 6.4. Unclip the return thermistor from the return inlet pipe. Disconnect thermistor electrical plug. Replace in the reverse order.

6.8 PRINTED CIRCUIT BOARD (fig. 25)

Carry out component removal procedure as described in 6.4. Pull the control fascia forward and lower it. Locate and remove the screws which secure the control panel (fig. 18), push the clips **(A)** and remove cover, after carefully taking note of all wiring connections and jumper tag configuration, disconnect all wiring from the PCB, locate and remove the PCB securing screws, remove the required PCB. Replace in the reverse order ensuring that the position of the 2 control knobs are correctly aligned with the respective potentiometers on the PCB.

Ensure that the correct jumper tag configuration has been respected. It will be necessary to check the functioning of the PCB is set for the correct boiler type/application.

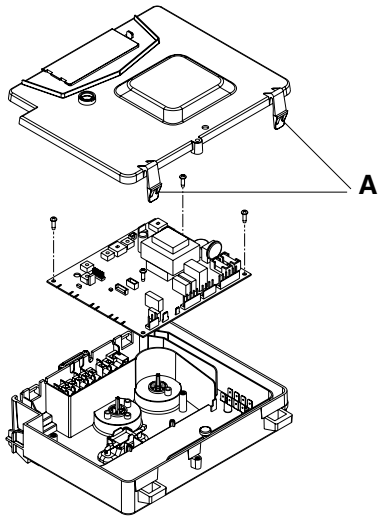

Fig. 25

6.9 GAS VALVE (fig. 26)

Carry out component removal procedure as described in 6.4. The gas valve must be changed as complete unit. Disconnect the electrical plug and leads from the gas valve, slacken and unscrew gas valve inlet and outlet connections.

Please note, the sealing washers **(A)** must be discarded and replaced with new sealing washers. Locate and remove gas valve retaining screws **(B)** on the underside of the boiler if required, the gas valve can now be removed. Replace in the reverse order. Check and adjust burner pressure settings.

WARNING, A GAS TIGHTNESS CHECK MUST BE CARRIED OUT.

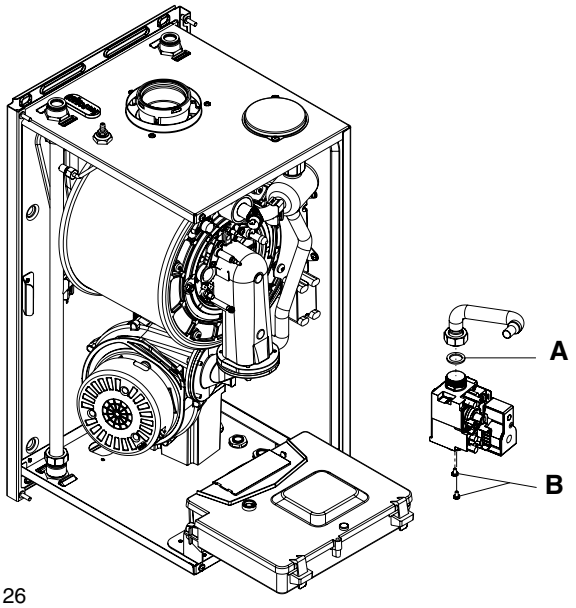

Fig. 26

6.10 INJECTOR (fig. 27)

Carry out component removal procedure as described in 6.4. Unscrew and remove gas pipe connections. Locate and remove the injector **(A)** inside the pipe. Replace in the reverse order. Check and adjust burner pressure settings.

WARNING, A GAS TIGHTNESS CHECK MUST BE CARRIED OUT.

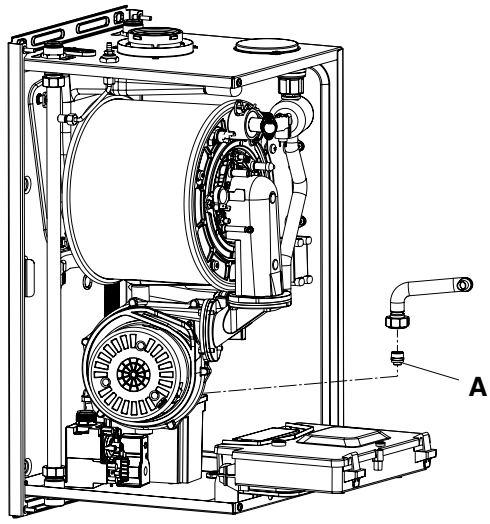

Fig. 27

6.11 ELECTRODES & CONDENSE SENSOR (fig. 28)

Carry out component removal procedure as described in 6.4. Disconnect the electrode leads and ancillary wiring from their respective connectors. Remove the retaining screws **(A)** for electrodes and remove. Remove the retaining nut **(B)** for condense sensor **(C)** and remove.

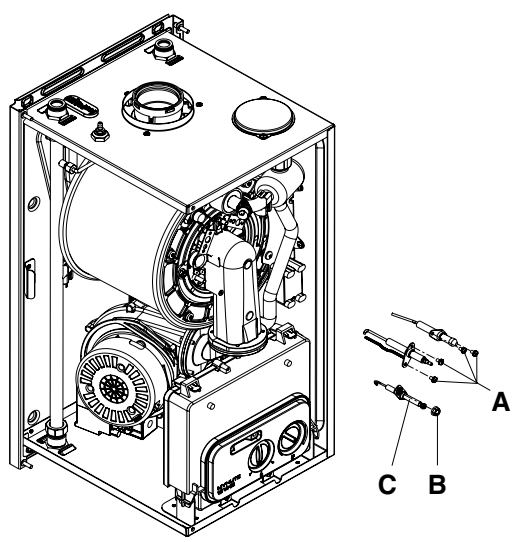

Fig. 28

6.12 FLUE FAN & BURNER ASSEMBLY

Step 1

Carry out component removal procedure as described in 6.4.

Step 2

Slacken the gas pipe **(A)** at the outlet connection and swing/rotate away from the fan assembly. Disconnect the electrical plugs from the fan. If only the fan/fan mixer is to be removed, proceed to step 6.

Step 3

Disconnect the wiring from the electrodes and thermostats that are located on the flue fan assembly, taking note of their correct locations.

Step 4 (fig. 29)

Locate and remove the 3-nuts **(B)** that secure the fan flue assembly to the heat exchanger. The fan flue assembly can now be removed with care.

Step 5

The burner can now be removed/withdrawn once the fan flue assembly has been removed

Step 6 (fig. 30)

To remove the fan assembly **(E)**, locate and remove the four hex-screws **(F)**. Gently ease the fan assembly from its location. To remove the mixer **(C)** locate and remove the three screws **(D)**; to remove the fan act on the four hex screws **(G)**.

Step 7

Replace in the reverse order. Ensure all seals are in good condition, taking care to ensure they are replaced correctly.

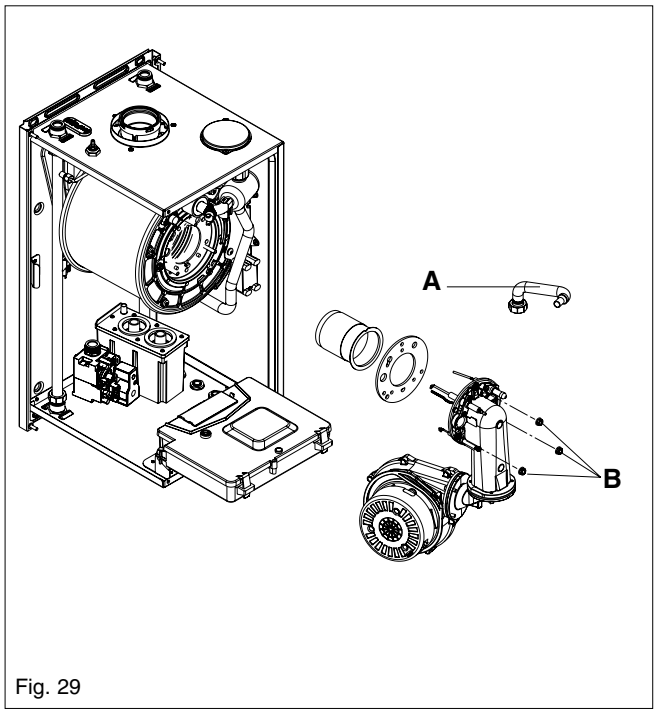

Fig. 29

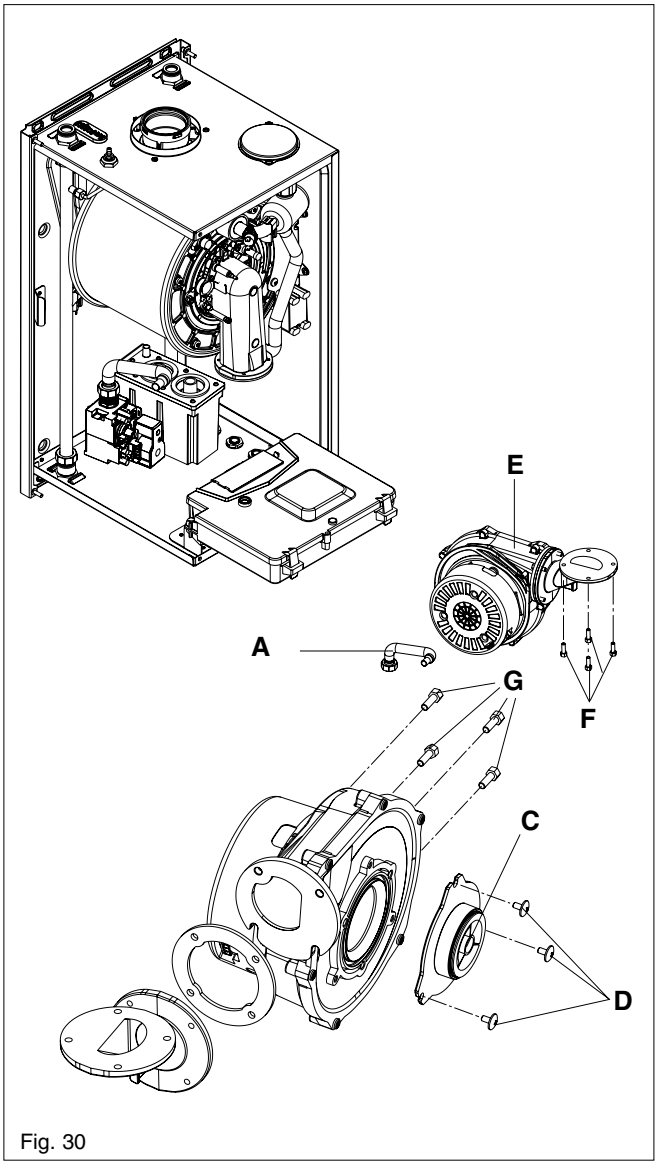

Fig. 30

6.13 MAIN HEAT EXCHANGER (fig.31)

The heat exchanger is a non-serviceable item and should only be removed if it's necessary to replace it. The heat exchanger and flue fan assembly can be removed as a single assembly from the appliance, or alternatively, the flue fan assembly can be removed separately/prior to removing the heat exchanger assembly (see 6.12).

Step 1

Carry out component removal procedure as described in 6.4. For ease of access, locate and remove the securing pins that hold the control panel to the appliance; ease the control panel from its location.

Step 2

Disconnect all wiring connections from the flue fan assembly and heat exchanger.

Step 3

Slacken the gas pipe **(A)** at the outlet connection and swing/rotate clear of the fan assembly.

Step 4

Disconnect and remove the flow **(B)**, return **(C)** and condense pipes/connections on the heat exchanger.

Step 5

Locate and remove the 2-screws **(D)** that secure the heat exchanger to the combustion chamber located at the front right of the assembly. Move the heat exchanger forward and disconnect it from the flue collector **(E)**. The heat exchanger can now be lifted and withdrawn from the appliance.

Step 7

Replace in the reverse order. Ensure all seals are in good condition, taking care to ensure all components are replaced correctly.

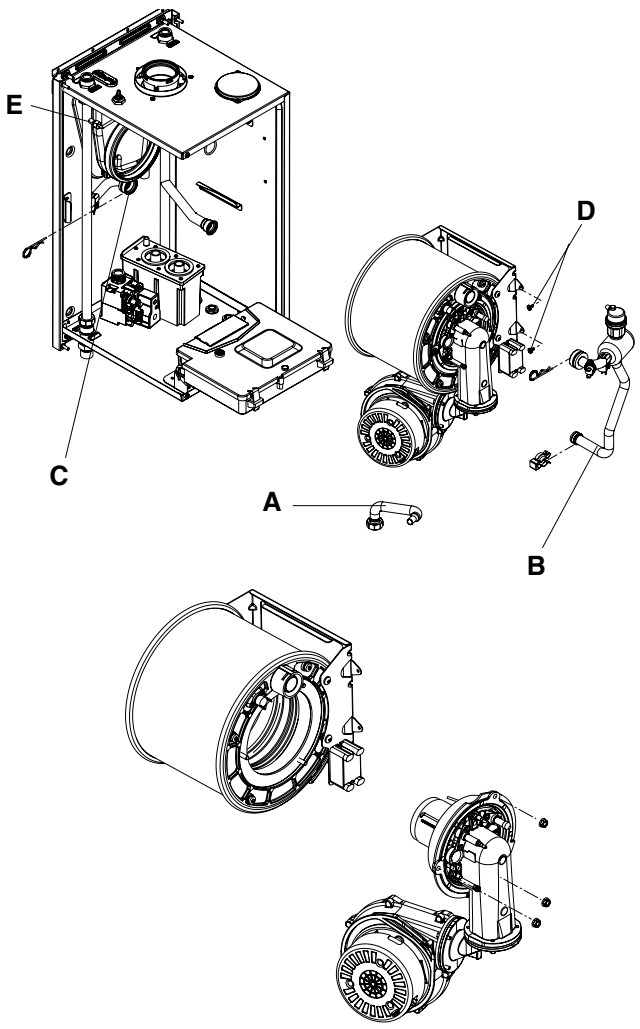

Fig. 31

6.14 CONDENSE TRAP REMOVAL (fig. 32)

Carry out component removal procedure as described in 6.4. Disconnect the 2 upper rubber condense pipes. Remove the pin **(A)** that secures the trap to the air box plate. Disconnect the lower rubber condense pipe from the condense trap.

Carefully remove the condense trap.

Replace in the reverse order.

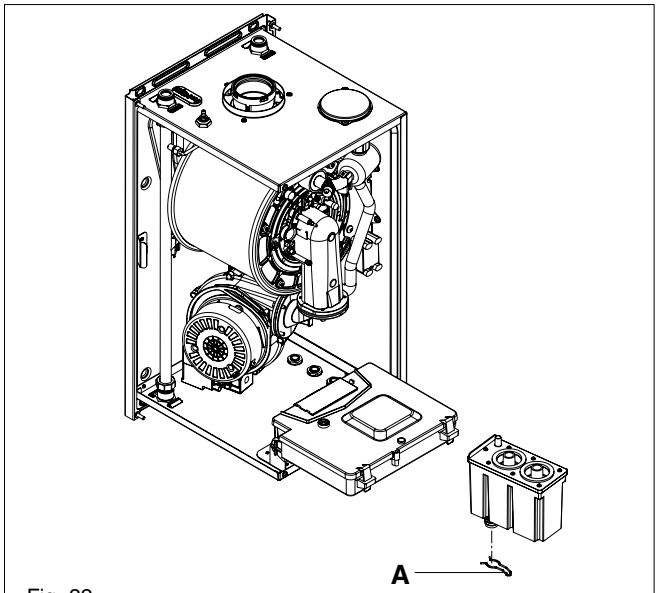

Fig. 32

6.15 FLUE COLLECTOR REMOVAL (fig. 33)

Carry out component removal procedure as described in 6.4.

Remove the heat exchanger as described in 6.13.

Remove the screw **(A)** and the cap **(B)**.

Locate and remove the flue collector securing screw/s **(C).** Gently ease the flue collector from its location. Replace in the reverse order. Ensure all seals are in good condition, taking care to ensure all components are replaced correctly.

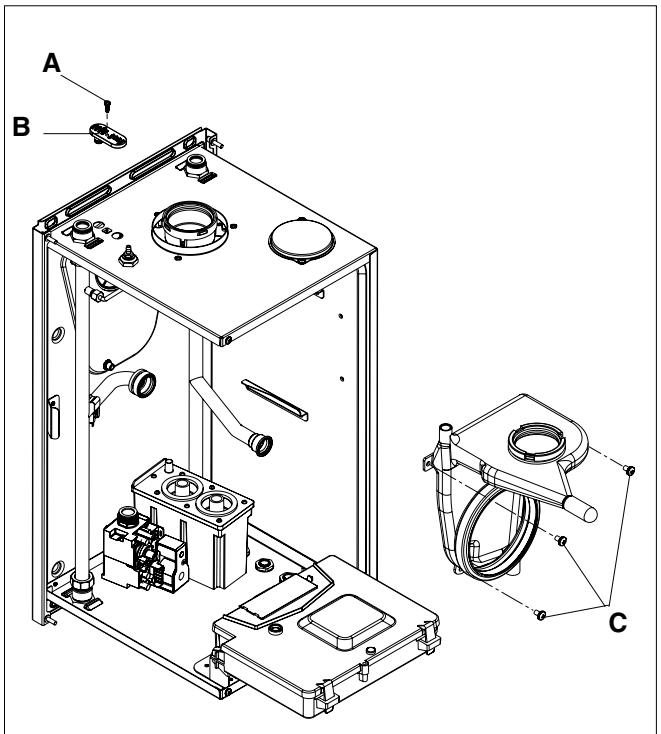

Fig. 33

7.1 CHECKING APPLIANCE OPERATION

When carrying out any repairs or servicing to the appliance, the relevant commissioning procedure must be undertaken to ensure the continued safe operation of the appliance. Particular attention should be made to ensure gas soundness, water soundness, and the electrical integrity of the appliance.

7.2 APPLIANCE MODES OF OPERATION

NOTE

The 2-digit display can show several different modes of operation:

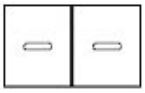

OFF mode

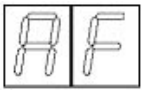

Frost protection mode active

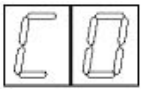

Combustion analysis mode active

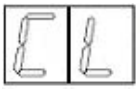 **OR** 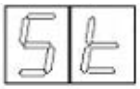

Autostop function active

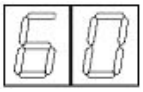

Normal heating request (example 60°C).

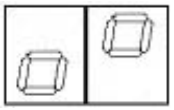 **OR** 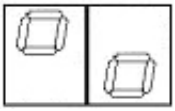

Purge cycle mode.

7.2.1 SELECTOR SWITCH IN THE OFF/STANDBY POSITION

When the selector switch is in the OFF/STANDBY position, the following functions are active.

Active functions:

- Frost-protection system
- Pump anti-block

7.2.2 ON-BOARD FUNCTIONS

- **AUTOSTOP:** Further information on the AUTOSTOP function, can be obtained from your local Vokera Sales Representative.
- **CO FUNCTION:** The CO function when activated, will allow the appliance to run at maximum and minimum output whilst a combustion analysis check is being carried out. Whilst the CO function is active, all other functions are disabled (minimum power operating period, anti-cycle, set-point, etc). Once enabled, the CO function will remain active for a 15-minute period, or until the function is manually deactivated
- **FROST-PROTECTION:** this function is only active when there are no requests for heating or HW. If the temperature drops below 5°C, the boiler will operate on minimum power until the temperature of the primary thermistor reaches 35°C. Thereafter the pump & fan will over-run for five minutes.
- **ANTI-CYCLE FUNCTION:** The anti-cycle function ensures the burner remains switched off for at least 5-minutes after the set-point hysterisis (set-point + 2 -8 °C).
- **PUMP ANTI-BLOCK FUNCTION:** when there has been no heating or HW request for 24-hours, the anti-block cycle is activated. The pump will be activated for a period of 30-seconds.
- **PUMP DISCHARGE FUNCTION:** at the end of any power on, the boiler makes an ON/OFF pump cycle (about 2 minutes). Only at the end of this procedure the boiler can satisfy any kind of CH requests.
- **PUMP CYCLE MODE:** wen power is restored to the PCB and/or the PCB is powered for the first time, the appliance will enter a 2-minute purge cycle whereby only the pump will run for 15-seconds then off for 15-seconds and will not “fire” until this period has elapsed.

7.2.3 HEATING MODE

With the selector switch in the ON position and any additional controls (time clock, programmer, room thermostat, etc,) calling for heat, the appliance will operate in the heating mode. The external pump and fan will be activated via the flow temperature sensor. When the fan is sensed to be operating correctly (tacho signal), the ignition sequence commences. Ignition is sensed by the electronic circuitry to ensure flame stability at the burner. Once successful ignition has been achieved, the electronic circuitry increases the gas rate to 75% of the MAX Heating (set by the corresponding HTG trimmer) for a period of 15 minutes. The speed of the fan and therefore the output of the boiler is determined by the temperature of the water sensed by the flow temperature sensor, consequently a high temperature at the flow sensor results in a lower fan speed. As the water temperature increases, the temperature sensors – located on the flow pipe of the boiler – reduce the fan speed via the electronic circuitry. Depending on the load, either the water temperature will continue to rise until the set point is achieved or the water temperature will fall whereby fan speed will increase relative to the output required. When the boiler has reached the set point (+ hysterisis), the burner will switch off. The built-in anti-cycle device prevents the burner from re-lighting for approximately 5-minutes. When the temperature of the flow sensor falls below the set point (- hysterisis), the burner will re-light.

NOTE

If the spark/sensing electrode does not sense ignition the appliance will re-attempt ignition a further 4-times then go to lockout. When the set-point has been reached (the position of the heating temperature selector) as measured at the primary thermistor, the appliance will begin the modulation phase whereby the fan and gas valve will continuously modulate to maintain the set-point.

If the temperature continues to rise and exceeds the set-point by 2°C (hysterisis), the burner will shut down. A new ignition sequence will be enabled when the 5- minute anti-cycle has been performed and the temperature at the primary thermistor has dropped 8°C (hysterisis) below the set-point.

NOTES

When the request for heating and/or hot water has been satisfied, the appliance pump and fan may continue to circulate to dissipate any residual heat within the appliance.

7.3 APPLIANCE FAN SPEEDS

The appliance fan speeds require to be checked and/or adjusted prior to making any adjustments to the gas valve or if the main PCB has been replaced.

ATTENTION
Gas type and appliance fan speed (output) **must be set** according to the specific appliance specification. Vokera accepts no responsibility if the gas type and/or fan speed is not correctly adjusted according to the respective appliance specification as detailed on the appliance data badge.

7.3.1 ADJUSTING THE APPLIANCE FAN SPEEDS
Move the selector switch to the OFF position; remove the casing as detailed in 4.7 and the two screws of control panel (fig. 18).

7.3.2 ABSOLUTE MAX FAN SPEED
Locate the MAX trimmer (fig. 34) and gently adjust clockwise or counter clockwise to achieve the correct fan speed (see table 7.3.6). NOTE, the display shows the fan RPM in multiples of 100, i.e. 25 = 2500RPM.

7.3.3 ABSOLUTE MIN FAN SPEED
Locate the MIN trimmer (fig. 34) and gently adjust clockwise or counter clockwise to achieve the correct fan speed (see table 7.3.6). NOTE, the display shows the fan RPM in multiples of 100, i.e. 25 = 2500RPM.

7.3.4 IGNITION FAN SPEED
Locate the IGN trimmer (fig. 34) and gently adjust clockwise or counter clockwise to achieve the correct fan speed (see table 7.3.6). NOTE, the display shows the fan RPM in multiples of 100, i.e. 25 = 2500RPM.

7.3.5 HEATING FAN SPEED
Lower the controls fascia and remove the cap **(A)** on the PCB cover (fig. 35).
Locate the HTG trimmer and gently adjust clockwise or counter clockwise to achieve the correct fan speed (see table 7.3.6). NOTE, the display shows the fan RPM in multiples of 100, i.e. 25 = 2500RPM.

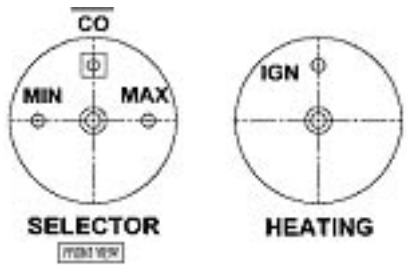

Fig. 34

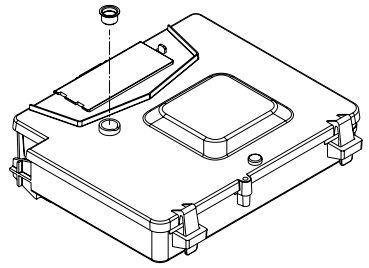
Fig. 35

7.3.6 FAN SPEED TABLE
Use the following table to set the corresponding fan speeds that are relative to the appliance you are working on.

FAN SPEED (rpm) TABLE

MODEL	MAX	MIN	HTG	IGN
12VHE	3.700	1.300	3.700	3.700
15VHE	4.500	1.300	3.700	3.700

7.4 CORRECTING THE CO_2 VALUES/ADJUSTING THE GAS VALVE
THE GAS VALVE MUST BE SET-UP OR ADJUSTED WITH THE AID OF A PROPERLY CALIBRATED FLUE GAS ANALYSER.

NOTE
To adjust the gas valve you must first ensure that the fan speed potentiometers (trimmers) have been set correctly (see 7.3).
Isolate the appliance from the electrical supply and remove the appliance casing as described in 4.7.1. Set the flue gas analyser to read CO_2 and insert the probe into the flue analysis test point (fig. 37). Restore the electrical supply to the boiler and switch the boiler to the OFF mode.
Remove the PCB cover and the two selector knobs. Locate/identify the CO button (see fig. 34). Press the CO button; the appliance will now operate in CO mode for approximately 15-minutes (see 7.9).

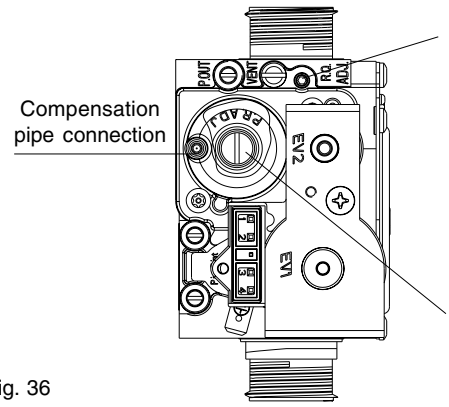

Fig. 36

IMPORTANT
There are 2-sets of CO_2 values for the appliance, i.e. a value for the casing 'on' and a value for the casing 'off'.
Use the CO_2 values for 'casing-off' when you are making adjustments to the gas valve.

7.4.1 GAS VALVE MAXIMUM SETTING
Locate and gently turn the HTG trimmer till the maximum value (fan speed) is obtained and check that it corresponds with the appropriate CO_2 value (Maximum) for the respective appliance. If the CO_2 reading is correct, proceed to gas valve minimum setting (7.4.2).
However, if the CO_2 reading is incorrect, the maximum gas pressure must be adjusted as follows:
- Using a suitable screwdriver, very slowly turn the maximum adjustment screw (see fig. 30) – clockwise to decrease, counter clockwise to increase – until the correct value is displayed on the CO_2 analyser (allow time for the analyser to stabilise).

	CASING OFF	CASING ON
CO_2	8.8%	9.0%

7.4.2 GAS VALVE MINIMUM SETTING
Locate and gently turn the HTG trimmer till the minimum value (fan speed) is obtained and check that it corresponds with the appropriate CO_2 value (Minimum) for the respective appliance. If the CO_2 reading is correct, rotate the HTG trimmer until the correct value is obtained for the respective appliance (see fan speed table) and proceed to 7.4.3.
However, if the CO_2 reading is incorrect, the minimum gas

pressure must be adjusted as follows:

- Using a 2,5mm Allen key, very slowly turn the minimum adjustment screw (see fig. 36) – clockwise to increase, counter clockwise to decrease - until the correct value is displayed on the CO_2 analyser (allow time for the analyser to stabilise).

	CASING OFF	CASING ON
CO_2	8.8%	9.0%

7.4.3 COMPLETION

On completion of the combustion analysis check and/or any gas valve adjustment, set the HTG trimmer to the corresponding value as detailed in the fan speed table. Move the mode selector to the OFF position. Remove the test probe from the test point and refit the sealing screw/s and/or cap.

Refit the cap on PCB cover, the knobs, the control panel with screws and refit the appliance casing as detailed in 4.7.

IMPORTANT

A GAS TIGHTNESS CHECK MUST BE CARRIED OUT IF ANY GAS CARRYING COMPONENTS HAVE BEEN REMOVED, REPLACED, OR DISTURBED .

7.5 COMBUSTION ANALYSIS TEST

A combustion analysis check can easily be carried out on the appliance via the test points located on the top of the appliance (see 7.4).

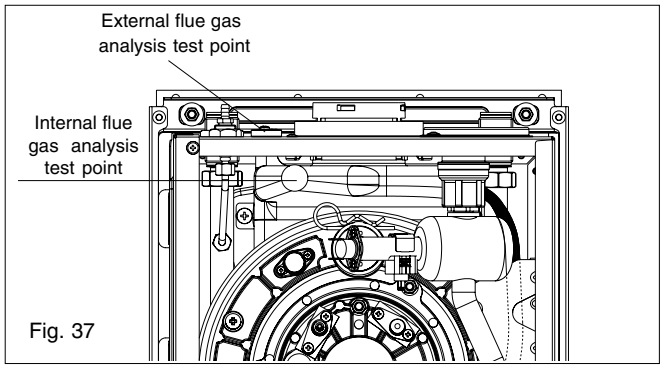

Fig. 37

IMPORTANT

There are 2-sets of CO_2 values for the appliance, i.e. a value for the casing 'on' and a value for the casing 'off'.

Use the CO_2 values for 'casing-on' when you are carrying out a combustion analysis check.

- Insert the flue gas analyser probe into the flue gas test point (see fig. 37).
- Operate the boiler at full output and compare the values with those shown in section 2 (Nat. Gas) or section 10 (LPG). If different adjust the gas valve according to 7.4.1, 7.4.2, & 7.4.3.

7.6 EXTERNAL FAULTS

Before carrying out any faultfinding or component replacement, ensure the fault is not attributable to any aspect of the installation.

7.6.1 INSTALLATION FAULTS

Symptom	Possible cause
No display/ignition	Check wiring/check electrical supply
No hot water	Check external controls
No heating	Check external controls

Fault code	Possible cause
10	Check gas supply, check flue system, check polarity

7.7 ELECTRICAL CHECKS

Any electrical checks must be carried out by a suitably qualified person.

7.7.1 EARTH CONTINUITY TEST

Isolate the appliance from the electrical supply, and using a suitable multi-meter carry out a resistance test. Connect test leads between an appliance earth point and the earth wire of the appliance supply cable. The resistance should be less than 1 OHM. If the resistance is greater than 1 OHM check all earth wires and connectors for continuity and integrity.

7.7.2 SHORT CIRCUIT CHECK

Isolate the appliance from the electrical supply, and using a suitable multi-meter, carry out a short circuit test between the Live & Neutral connections at the appliance terminal strip (fig.21). Repeat above test on the Live & Earth connections at the appliance terminal strip (fig.21).

NOTE

Should it be found that the fuse has failed but no fault is indicated, a detailed continuity check will be required to trace the fault. A visual inspection of components may also assist in locating the fault.

7.7.3 POLARITY CHECK

With the appliance connected to the electrical supply and using a suitable multimeter, carry out the following voltage tests:

- Connect test leads between the Live & Neutral connections at the appliance terminal strip (fig. 21). The meter should read approximately 230V ac. If so proceed to next stage. If not, see 7.8.4.
- Connect test leads between the Live & Earth connections at the appliance terminal strip (fig.21). The meter should read approximately 230V ac. If so proceed to next stage. If not, see 7.8.4.
- Connect test leads between the Neutral & Earth connections at the appliance terminal strip (fig.21). The meter should read approximately 0 – 15Vac. If so polarity is correct. If not, see 7.8.4.

7.7.4 REVERSED POLARITY OR SUPPLY FAULT

Repeat the above tests at the appliance isolator, if testing reveals correct polarity and/or supply at the isolator, re-check wiring and connections between the isolator and the appliance. If tests on the isolator also reveal reversed polarity or a supply fault, consult the local electricity supplier for advice.

7.7.5 RESISTANCE TO EARTH CHECK

Isolate the appliance from the electrical supply, and using a suitable multi-meter carry out a resistance test. Connect test leads between the Live & Earth connections at the appliance terminal strip (fig. 21). If the meter reads other than infinity there is a fault that must be isolated, carry out a detailed continuity check to identify the location of the fault.

These series of checks must be carried out before attempting any faultfinding procedures on the appliance. On completion of any task that required the disconnection and re-connection of any electrical wiring or component, these checks must be repeated.

7.8 FAULT FINDING

Before attempting any faultfinding, the electrical checks as detailed in 7.8 must be carried out. Isolate the appliance from the electrical supply.

Disconnect any external controls from terminal plug M5 (fig. 16), and insert a link-wire between the two wires at the 'TA' connections (fig. 21).

NOTE
Restore the electrical supply to the boiler and turn the selector switch to the on position. The boiler should now function as described in section 7.2. Should the boiler fail to respond, the internal fuses and connectors should be checked to ensure integrity and continuity. If the boiler still fails to respond, refer to the detailed faultfinding flowcharts located at the end of this section.

7.9 COMPONENT VALUES & CHARACTERISTICS

COMPONENT	VALUE
Fan	230Vac
Pump	230Vac
Ignition transformer	230Vac
Gas valve	230Vac
Room thermostat connection	230Vac
NTC thermistor (dry contact)	10Kohm
NTC thermistor (wet contact)	10Kohm
FUNCTION	**VALUE**
Standard Heating Range (°C)	40 – 76
CH limited power at 75%	15 Min
Heating OFF hysterisis (^{0}C)	SP + 2
Heating ON hysterisis (^{0}C)	SP – 8
Anti-cycle delay	5-min
Pump over-run	5-min
Low output (min. output + %)	Min+25
CO function max temp. (^{0}C)	87
CO re-light temp. (^{0}C)	75
CO function time	15-min
Flow NTC max temp. (^{0}C)	87
High limit thermostat (^{0}C)	97
Burner thermostat (^{0}C)	170
Maximum differential (^{0}C)	35
IGNITION CONTROL	**VALUE**
Ignition attempts before L/O (lockout)	5
Re-ignition attempts after loss of flame signal	5

7.10 FAULT CODES

When the boiler detects a temporary fault condition, the appropriate code is shown flashing on the display. If/when the fault code is final, the pump will perform a 60-second post circulation and the red LED will be illuminated.

CODE	CAUSE	ALARM TYPE	ACTION
AL10	Ignition failure/not flame sensed, condense sensor activated	Final	Reset, check appliance operation
AL20	Limit thermostat fault	Final	Reset, check appliance operation
AL21	External device fault (UHT/CPA)	Final	Reset, check appliance
AL26	Return temperature too high	Final	Reset, check pump, ensure there is sufficient
			flow sensor temperature). circulation around heating circuit/s
AL28	Temperature differential inverted (return sensor temperature higher than flowsensor temperature)	Final	Reset, check pump, ensure there is sufficient circulation around heating circuit/s thermistors
AL34	Fan tacho signal fault	Final	Reset check appliance operation, check fan
AL52	Internal fault	Final	Reset, check appliance operation
AL55	Jumper tag fault	Final	Check jumper tag configuration
AL60	Jumper tag fault	Temporary	Check jumper tag configuration
AL71	Primary (flow) thermistor fault	Temporary	Check primary thermistor, check wiring
AL73	Return thermistor fault	Temporary	Check return thermistor, check /wiring
AL74	No water circulation	Final	Reset, check appliance operation, check pump, ensure there is water and sufficient circulation around heating circuit/s
AL79	Flow temperature too high, or temperature differential between primary and return too high	Final	Reset, check appliance operation, check thermistors

8.1 EXTERNAL WIRING

The appliance comes with a factory fitted (TA) link to allow basic operation of the boiler via the mode selector switch. If external controls are to be added to the system, they must be connected to the appliance as shown in the following diagrams. For advice on controls that are not featured in this book, please contact Vokera technical on 0870 333 0520.

NOTE

- **THE LINK WIRE MUST BE REMOVED IF ADDITIONAL CONTROLS ARE ADDED**
- **THE ELECTRICAL SUPPLY TO THE PUMP MUST BE CONNECTED TO THE TERMINALS AS SHOWN IN FIG. 31**
- **A PERMANENT 230V SUPPLY MUST BE CONNECTED TO THE BOILER AS SHOWN IN FIG. 31**

8.1.1 EXTERNAL WIRING LIMITATIONS

CONNECTION	MAX. LENGTH
Room thermostat	30-metres
Time clock	30-metres
Programmer	30-metres

Any external wiring must remain within the limits as detailed in the table below.

8.2 TYPICAL CONTROL APPLICATIONS

The appliance can be used with the following controls:

- Single-channel, voltage-free time clocks.
- Programmable room thermostats.
- External twin-channel programmers. The appliance can be used in conjunction with typical 'S'-Plan/'Y'-Plan systems (see 8.4.1 & 8.4.2), please contact Vokera technical should you require further detailed instruction.

8.3 OTHER DEVICES

Contact the controls manufacturer and/or Vokera technical department should you require more specific information on the suitability of a particular control. Further guidance on the recommended practice for the installation of external controls, can be found in CHeSS – HC5/HC6 (www.energyefficiency.gov.uk).

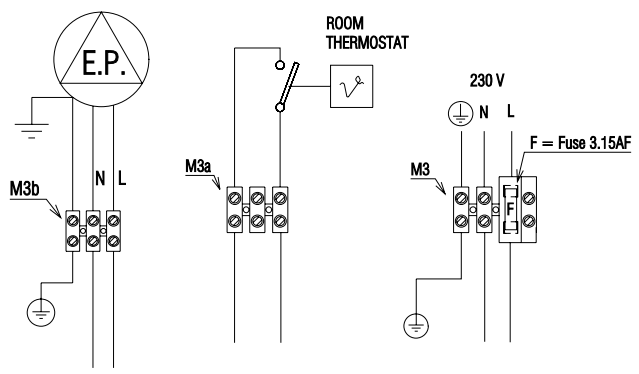

Fig. 38

IMPORTANT

- The boiler must always be supplied with a permanent 230V electrical supply.
- The pump must always be connected directly to the pump terminals located within the boiler.
- Always remove the link between TA & TA on the appliance high-voltage terminal strip whenever additional controls are connected to the appliance.

NOTE. L-N-E CONNECTION MUST NOT BE INTERCHANGED
CONTROL SWITCHING OF TIME CLOCK AND ROOM THERMOSTAT RATED IS 230 V.a.c.

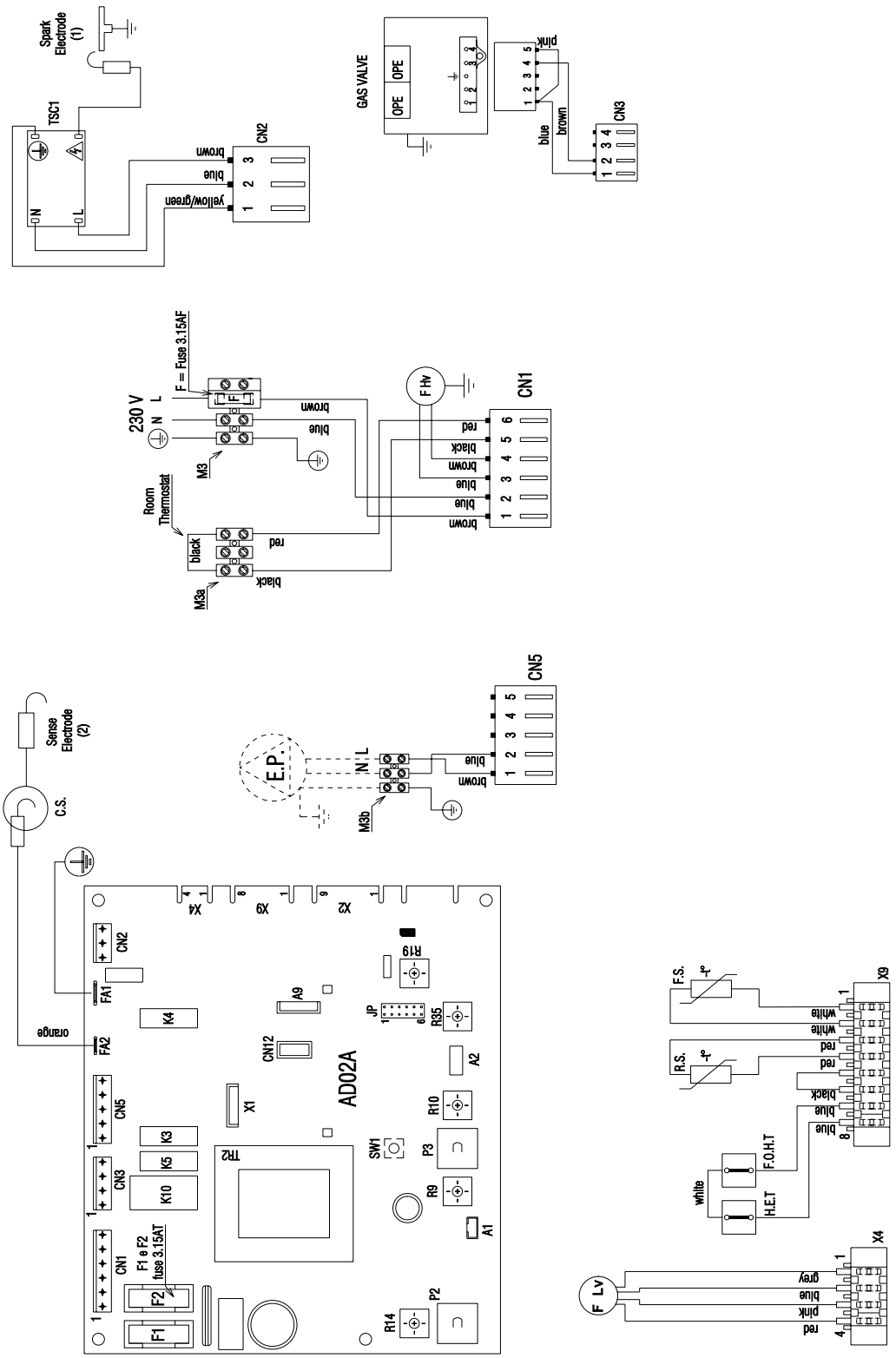

Fig. 39

F Hv	Fan power supply 230 V	X4÷X9	Connection to PCB low voltage
F Lv	Fan signal control	F.O.H.T	Flow over heat thermostat
E.P.	External pump	H.E.T	Heat exchanger thermostat
F	Fuse 3.15A F (fast)	M3-M3a	Terminal strip for supply in room thermostat
F1-F2	Fuse 3.15A T (delay)	M3b	Terminal strip for esternal pump
OPE	Gas valve solenoids	X1	Connector minitank **(unused)**
S.E. (1)	Spark electrode	CN12	Service connector
S.E. (2)	Sense electrode	SW1	Co button
C.S.	Condensate sensor	A1	24V output to 2CH - programmer
G.V.	Gas valve	P2	Heating potentiometer
TSC1	Ignition transformer	P3	Selector switch
TR2	PCB transformer	R9	Trimmer for maximum output
FS	Flow thermistor (NTC)	R10	Trimmer for minimum output
RS	Return thermistor (NTC)	R14	Trimmer for ignition fan speed
AD02A	Main PCB	R19	Trimmer for heating fan speed
CN1÷CN5	Connection to PCB high voltage	R35	Trimmer thermoregulation

Fig. 40

8.4.1. "S" - Plan with Vokera 2-channel programmer

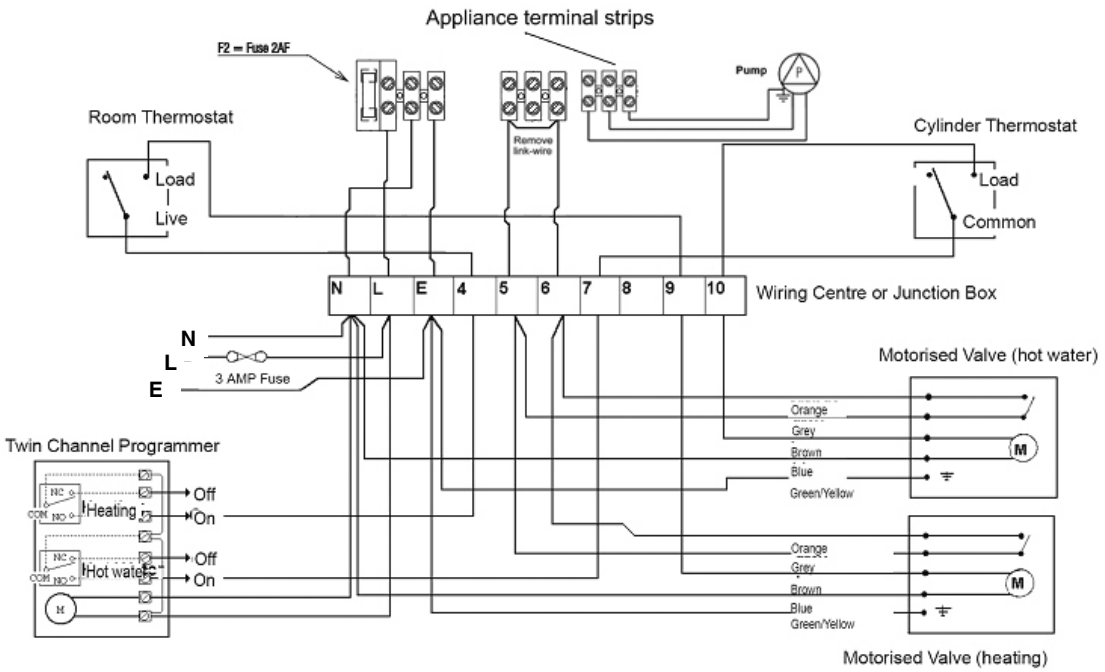

Fig. 41

8.4.2. "Y" - Plan with Vokera 2-channel programmer

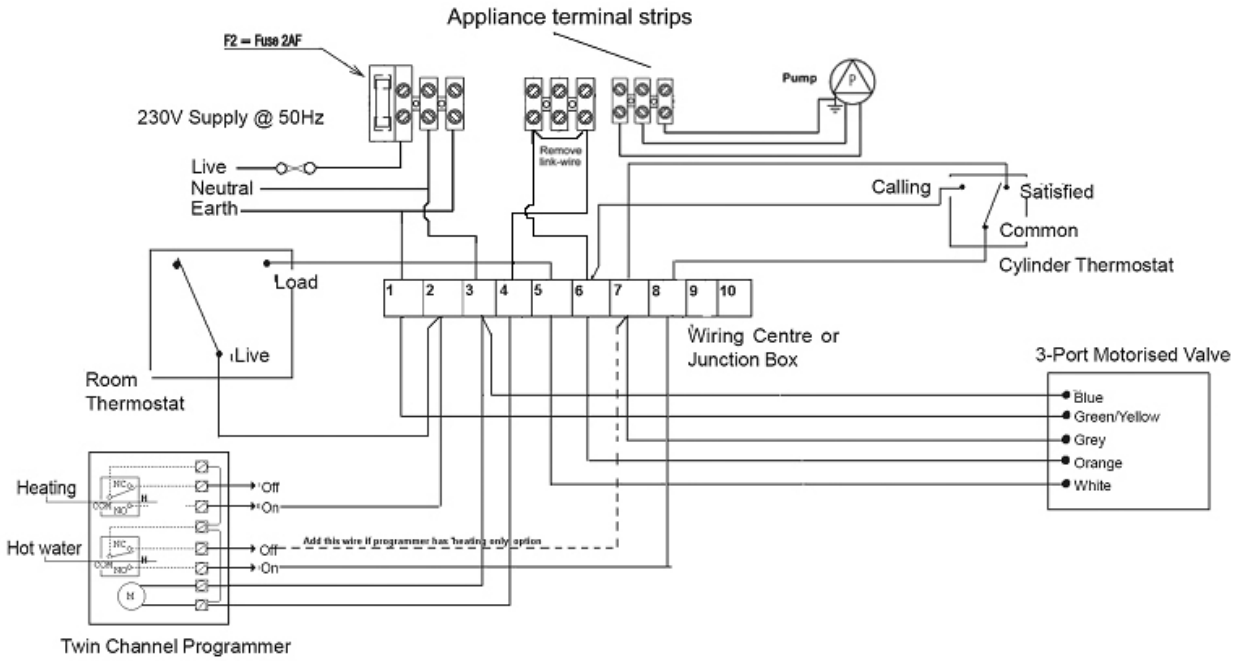

Table 1

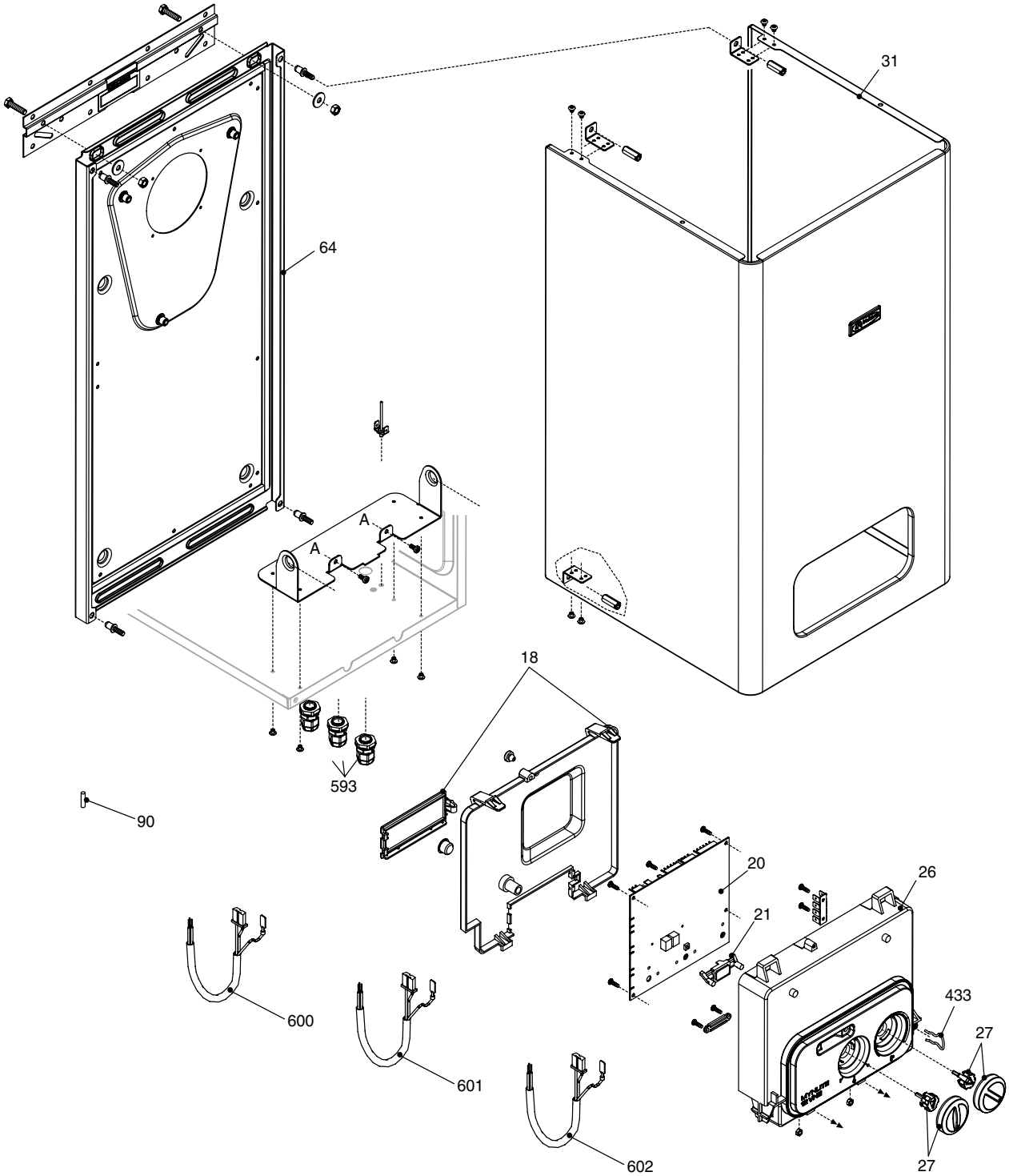

POS.	DESCRIPTION	12VHE	15VHE
18	Posterior cover instrumental panel	20000121	20000121
20	Printed circuit board R	10029717	R10029717
21	Led light guide	R10028557	R10028557
26	Instrumental panel	20000124	20000168
27	Knob assembly	R10028559	R10028559
31	Case	20000122	20000122
64	Frame	20000139	20000139
90	Fuse	R3478	R3478
433	Clip	R10024986	R10024986
593	Cable holder	20000142	20000142
600	Pump cable	20000134	20000134
601	Power wiring harness	20000136	20000136
602	Wiring harness	20000138	20000138

Table 2

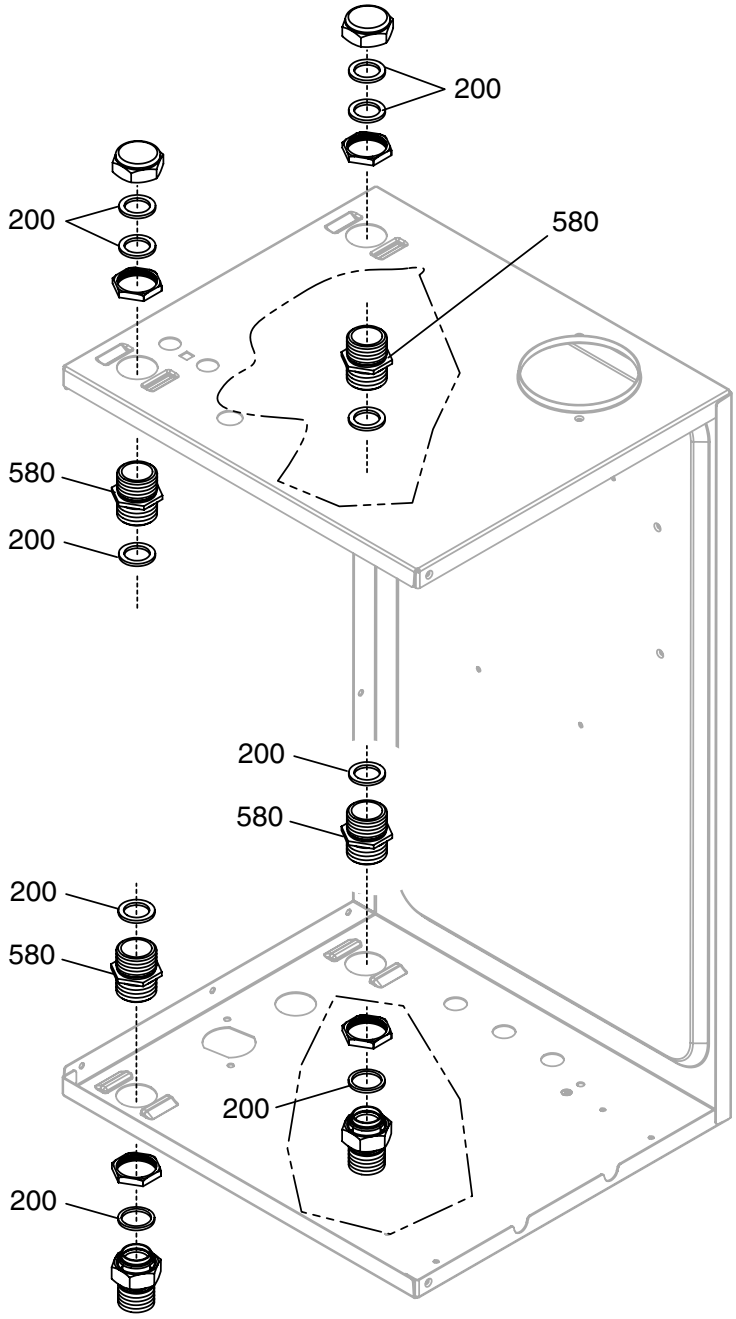

POS.	DESCRIPTION	12VHE	15VHE
200	Washer	R5023	R5023
580	Connection M 3/4 - 3/4	R10029526	R10029526

Table 3

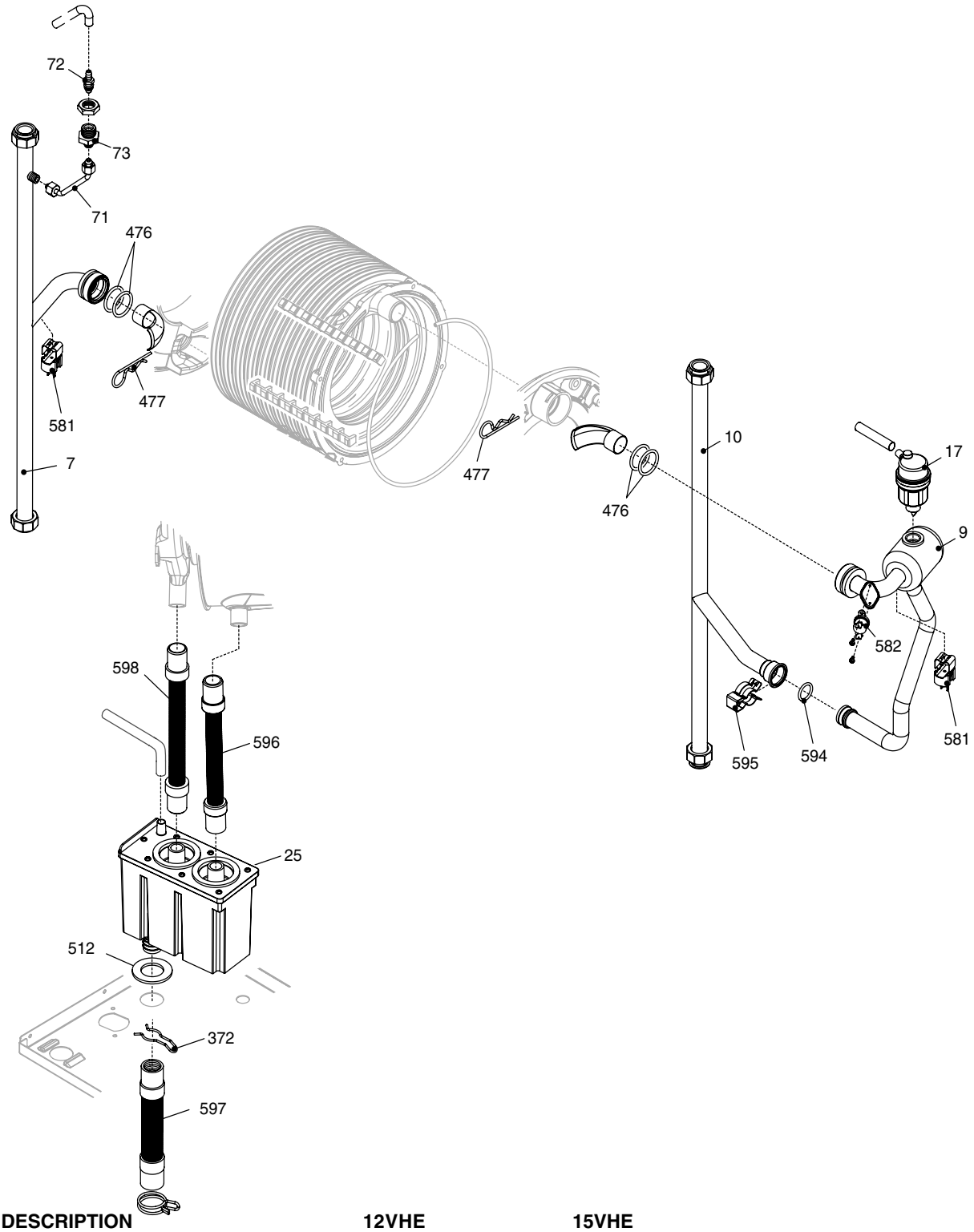

POS.	DESCRIPTION	12VHE	15VHE
7	Pipe	20000128	20000128
9	Pipe	20000126	20000126
10	Pipe	20000127	20000127
17	Air venting plug	R10029306	R10029306
25	Siphon	R10028405	R10028405
71	Pipe	20000129	20000129
72	Drain tap	R01005137	R01005137
73	Cock	R10028431	R10028431
372	Clip	R2588	R2588
476	O ring	R10026324	R10026324
477	Split pin	R10026269	R10026269
512	Washer	R10027193	R10027193
581	NTC sensor	R10029715	R10029715
582	Thermostat	R9695	R9695
594	O ring	20000131	20000131
595	Spring pipe	20000130	20000130
596	Flexible pipe	20000132	20000132
597	Flexible pipe	20000133	20000133
598	Pipe	R10026545	R10026545

Table 4

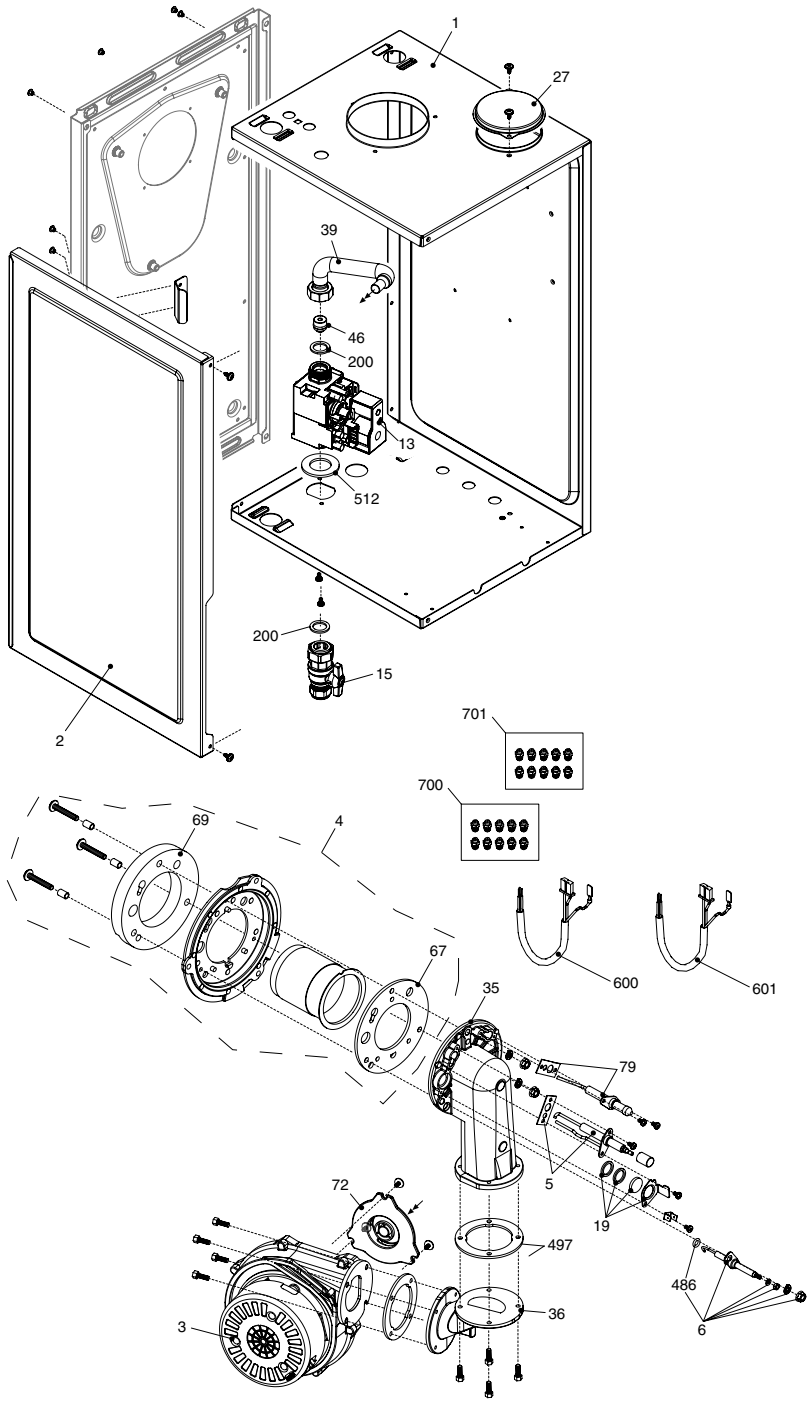

POS.	DESCRIPTION	12VHE	15VHE
1	Roomsealed chamber	20000119	20000119
2	Roomsealed chamber side	20000140	20000140
3	Fan	R10028456	R10028456
4	Burner assembly	20000148	20000148
5	Spark / ignition electrode	R10027864	R10027864
6	Condense electrode	R10026316	R10026316
13	Gas valve	R10028538	R10028538
15	3/4" gas cock	R10027806	R10027806
19	Glass flange assembly	R10029823	R10029823
27	Plug	R10023805	R10023805
35	Air gas conveyor	R10028420	R10028420
36	Flange fan	200001120	200001120
39	Gas pipe	20000125	20000125
46	Gas diaphragm 3,6	R10027159	R10027159
67	Washer Ø 62	R10026322	R10026322
69	Tryton	R10028425	R10028425
72	Mixer	R10027408	R10027408
79	Flame detection electrode	R10028422	R10028422
200	Washer	R5023	R5023
486	O ring	R10026325	R10026325
497	Washer	R10026796	R10026796
512	Washer	R10027193	R10027193
600	Spark electrode cable	R10026558	R10026558
601	Gas valve cable	20000137	20000137
700	Ng conversion kit	R01005464	R01005464
701	LPG conversion kit	R01005446	R0105446

Table 5

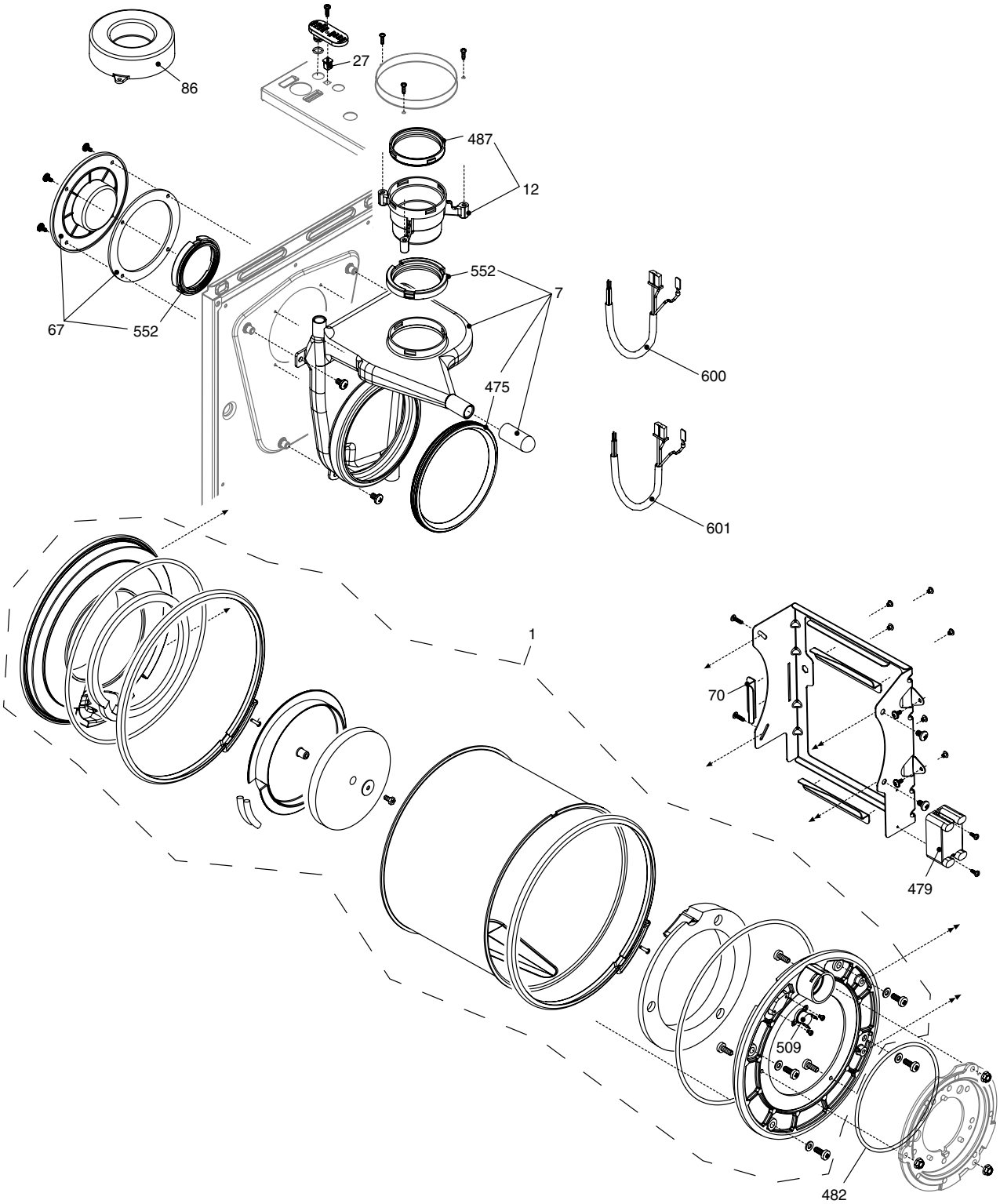

POS.	DESCRIPTION	12VHE	15 VHE
1	Condensing exchanger assembly	20000141	20000141
7	Conveyor	20000123	20000123
12	Flue drain connection	R10028421	R10028421
27	Nut screw	R10020625	R10020625
67	Drain plug	20000118	20000118
86	Drain plug	20000143	20000143
475	Washer Ø 125	R10026323	R10026323
479	Ignition transformer	R10026237	R10026237
482	Washer	R10026366	R10026366
487	Washer Ø 60	R10026345	R10026345
509	High limit thermostat	R10026982	R10026982
552	Washer Ø 60	R10028426	R10028426
600	Combustion cable	20000135	20000135
601	Wiring harness	R10027360	R10027360

SECTION 10 LPG INSTRUCTIONS

10.1 RELATED DOCUMENTS

BS 6798		**INSTALLATION OF BOILERS OF RATED INPUT NOT EXCEEDING 60 kW**
BS 5449	**PART 1**	**FORCED CIRCULATION HOT WATER SYSTEMS**
BS 5446		**INSTALLATION OF GAS HOT WATER SUPPLIES FOR DOMESTIC PURPOSES**
BS 5440	**PART 1**	**FLUES**
BS 5482	**PART 1**	**DOMESTIC BUTANE & PROPANE GAS BURNERS IN PERMAMENT DWELLINGS**

10.2 TECHNICAL DATA

Gas Pressures	**12VHE**	**15VHE**	
Inlet pressure	37.00	37.00	
Maximum gas rate	0.93	1.16	kg/hr
Minimum gas rate	0.27	0.27	kg/hr
Injector size	3.6	3.6	mm
Efficiency			
SEDBUK (%)	92.7 Band "A"	92.5 Band "A"	
Emissions			
CO max (mg/kWh)	193.3	215.0	mg/kWh
CO min (mg/kWh)	5.37	5.37	mg/kWh
NOx max (mg/kWh)	53.0	53.0	mg/kWh
NOx min (mg/kWh)	35.3	35.3	mg/kWh
CO_2 max	10.0	10.0	%
CO_2 min	10.0	10.0	%
CO/CO_2 ratio (max)	0.002 to 1	0.002 to 1	
CO/CO_2 ratio (min)	0.0005 to 1	0.0005 to 1	

10.3 CONVERTING THE APPLIANCE GAS TYPE

To convert the appliance to another gas type it is necessary to change the burner injector and adjust the gas valve.

- To change the injector see 6.12.1.
- To adjust CO_2 value see 7.4.1-2-3.

10.4 GAS SUPPLY

The gas supply must be connected to the appliance by a competent LPG installer and must be of sufficient size to supply the appliance at its maximum output. An existing supply must be checked to ensure that it is of adequate size to deal with the maximum rated input of this and any other appliances that it serves.

10.5 GAS SUPPLY INSTALLATION

The entire installation including the meter must be purged and checked for gas soundness.

10.6 CORRECTING THE CO2 VALUES/ADJUSTING THE GAS VALVE

THE GAS VALVE MUST BE SET-UP OR ADJUSTED WITH THE AID OF A PROPERLY CALIBRATED FLUE GAS ANALYSER.

NOTE

To adjust the gas valve you must first ensure that the fan speed potentiometers (trimmers) have been set correctly (see 7.3).

Isolate the appliance from the electrical supply and remove the appliance casing as described in 4.7.1. Set the flue gas analyser to read CO_2 and insert the probe into the flue analysis test point (fig. 37). Restore the electrical supply to the boiler and switch the boiler to the OFF mode.

Remove the PCB cover and the two selector knobs. . Locate/identify the CO button (see fig. 34). Press the CO button; the appliance will now operate in CO mode for approximately 15-minutes (see 7.9).

IMPORTANT

There are 2-sets of CO_2 values for the appliance, i.e. a value for the casing 'on' and a value for the casing 'off'.

Use the CO_2 values for 'casing-off' when you are making adjustments to the gas valve.

10.6.1 GAS VALVE MAXIMUM SETTING

Lower the controls fascia and remove the cap **(A)** on the PCB cover (fig. 44).

Locate and gently turn the HTG trimmer till the maximum value (fan speed) is obtained and check that it corresponds with the appropriate CO_2 value (Maximum) for the respective appliance. If the CO_2 reading is correct, proceed to gas valve minimum setting (7.4.2).

However, if the CO_2 reading is incorrect, the maximum gas pressure must be adjusted as follows:

- Using a suitable screwdriver, very slowly turn the maximum adjustment screw (see fig. 45) – clockwise to decrease, counter clockwise to increase – until the correct value is displayed on the CO_2 analyser (allow time for the analyser to stabilise).

	CASING OFF	**CASING ON**
CO_2	9.8%	10.0%

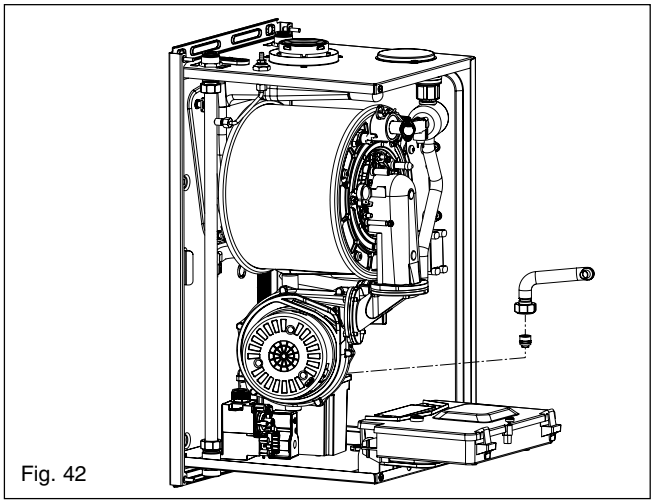

Fig. 42

10.6.2 GAS VALVE MINIMUM SETTING

Locate and gently turn the HTG trimmer till the minimum value (fan speed) is obtained and check that it corresponds with the appropriate CO_2 value (Minimum) for the respective appliance. If the CO_2 reading is correct, rotate the HTG trimmer until the correct value is obtained for the respective appliance (see fan speed table) and proceed to 7.4.3.

However, if the CO_2 reading is incorrect, the minimum gas pressure must be adjusted as follows:

- Using a 2,5mm Allen key, very slowly turn the minimum adjustment screw (see fig. 45) – clockwise to increase, counter clockwise to decrease - until the correct value is displayed on the CO_2 analyser (allow time for the analyser to stabilise).

	CASING OFF	CASING ON
CO_2	9.8%	10.0%

10.6.3 COMPLETION

On completion of the combustion analysis check and/or any gas valve adjustment, set the HTG trimmer to the corresponding value as detailed in the fan speed table. Move the mode selector to the OFF position. Remove the test probe from the test point and refit the sealing screw/s and/or cap.

Refit the PCB cover and refit the appliance casing as detailed in 4.7

IMPORTANT

A GAS TIGHTNESS CHECK MUST BE CARRIED OUT IF ANY GAS CARRYING COMPONENTS HAVE BEEN REMOVED, REPLACED, OR DISTURBED .

10.7 COMBUSTION ANALYSIS TEST

A combustion analysis check can easily be carried out on the appliance via the test points located on the top of the appliance (see 7.4).

IMPORTANT

There are 2-sets of CO_2 values for the appliance, i.e. a value for the casing 'on' and a value for the casing 'off'.

Use the CO_2 values for 'casing-on' when you are carrying out a combustion analysis check.

- Insert the flue gas analyser probe into the flue gas test point (see fig. 37).
- Operate the boiler at full output and compare the values with those shown in section 10 (LPG). If different adjust the gas valve according to the above.

10.8 APPLIANCE FAN SPEEDS

The appliance fan speeds require to be checked and/or adjusted prior to making any adjustments to the gas valve or if the main PCB has been replaced.

ATTENTION

Gas type and appliance fan speed (output) **must be set** according to the specific appliance specification. Vokera accepts no responsibility if the gas type and/or fan speed is not correctly adjusted according to the respective appliance specification as detailed on the appliance data badge.

10.8.1 ADJUSTING THE APPLIANCE FAN SPEEDS

Move the selector switch to the OFF position; remove the casing as detailed in 4.7.

10.8.2 ABSOLUTE MAX FAN SPEED

Locate the MAX trimmer (fig. 43) and gently adjust clockwise or counter clockwise to achieve the correct fan speed (see table above).

NOTE

The display shows the fan RPM in multiples of 100, i.e. 25 = 2500RPM.

10.8.3 ABSOLUTE MIN FAN SPEED

Locate the MIN trimmer (fig. 43) and gently adjust clockwise or counter clockwise to achieve the correct fan speed (see table above).

NOTE

The display shows the fan RPM in multiples of 100, i.e. 25 = 2500RPM.

10.8.4 IGNITION FAN SPEED

Locate the IGN trimmer (fig. 43) and gently adjust clockwise or counter clockwise to achieve the correct fan speed (see table above).

NOTE

The display shows the fan RPM in multiples of 100, i.e. 25 = 2500RPM.

7.3.5 HEATING FAN SPEED

Lower the controls fascia and remove the cap **(A)** on the PCB cover (fig. 44).

Locate the HTG trimmer and gently adjust clockwise or counter clockwise to achieve the correct fan speed (see table 7.3.6). NOTE, the display shows the fan RPM in multiples of 100, i.e. 25 = 2500RPM.

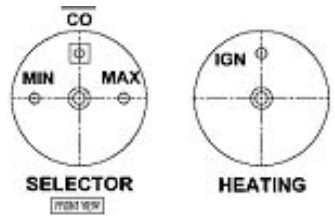

Fig. 43

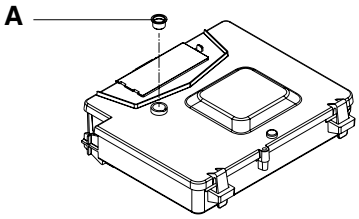

Fig. 44

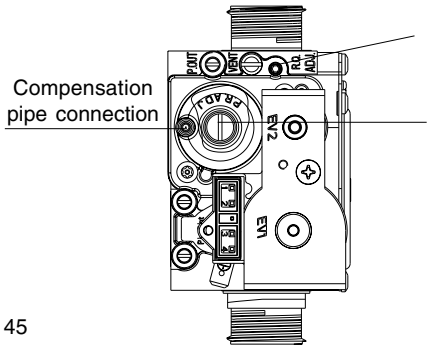

Fig. 45

10.8.5 FAN SPEED TABLE

Use the following table to set the corresponding fan speeds that are relative to the appliance you are working on.

FAN SPEED (rpm) TABLE

MODEL	MAX	MIN	HTG	IGN
12VHE	3.700	1.300	3.700	3.700
15VHE	4.500	1.300	3.700	3.700

BENCHMARK No. | | | | | | |

COLLECTIVE MARK

GAS BOILER COMMISSIONING CHECKLIST

BOILER SERIAL No. _____ NOTIFICATION No. _____

CONTROLS

To comply with the Building Regulations, each section must have a tick in one or other of the boxes

TIME & TEMPERATURE CONTROL TO HEATING	ROOM T/STAT & PROGRAMMER/TIMER	☐	PROGRAMMABLE ROOMSTAT	☐
TIME & TEMPERATURE CONTROL TO HOT WATER	CYLINDER T/STAT & PROGRAMMER/TIMER	☐	COMBI BOILER	☐
HEATING ZONE VALVES	FITTED	☐	NOT REQUIRED	☐
HOT WATER ZONE VALVES	FITTED	☐	NOT REQUIRED	☐
THERMOSTATIC RADIATOR VALVES	FITTED	☐		
AUTOMATIC BYPASS TO SYSTEM	FITTED	☐	NOT REQUIRED	☐

FOR ALL BOILERS CONFIRM THE FOLLOWING

THE SYSTEM HAS BEEN FLUSHED IN ACCORDANCE WITH THE BOILER MANUFACTURER'S INSTRUCTIONS?	☐
THE SYSTEM CLEANER USED	
THE INHIBITOR USED	

FOR THE CENTRAL HEATING MODE, MEASURE & RECORD

GAS RATE		^{3}/hr		^{3}/hr
BURNER OPERATING PRESSURE (IF APPLICABLE)	☐	N/A		
CENTRAL HEATING FLOW TEMPERATURE				°C
CENTRAL HEATING RETURN TEMPERATURE				°C

FOR COMBINATION BOILERS ONLY

HAS A WATER SCALE REDUCER BEEN FITTED?	YES ☐	NO ☐
WHAT TYPE OF SCALE REDUCER HAS BEEN FITTED?		

FOR THE DOMESTIC HOT WATER MODE, MEASURE & RECORD

GAS RATE		^{3}/hr		^{3}/hr
MAXIMUM BURNER OPERATING PRESSURE (IF APPLICABLE)	☐	N/A		mbar
COLD WATER INLET TEMPERATURE				°C
HOT WATER OUTLET TEMPERATURE				°C
WATER FLOW RATE				lts/min

FOR CONDENSING BOILERS ONLY CONFIRM THE FOLLOWING

THE CONDENSATE DRAIN HAS BEEN INSTALLED IN ACCORDANCE WITH THE MANUFACTURER'S INSTRUCTIONS?	YES ☐

FOR ALL INSTALLATIONS CONFIRM THE FOLLOWING

THE HEATING AND HOT WATER SYSTEM COMPLIES WITH CURRENT BUILDING REGULATIONS				☐
THE APPLIANCE AND ASSOCIATED EQUIPMENT HAS BEEN INSTALLED AND COMMISSIONED IN ACCORDANCE WITH THE MANUFACTURER'S INSTRUCTIONS				☐
IF REQUIRED BY THE MANUFACTURER, HAVE YOU RECORDED A CO/CO_2 RATIO READING?	N/A ☐	YES		CO/CO_2 RATIO
THE OPERATION OF THE APPLIANCE AND SYSTEM CONTROLS HAVE BEEN DEMONSTRATED TO THE CUSTOMER				☐
THE MANUFACTURER'S LITERATURE HAS BEEN LEFT WITH THE CUSTOMER				☐

COMMISSIONING ENG'S NAME PRINT _____ CORGI ID No. _____

SIGN _____ DATE _____

SERVICE INTERVAL RECORD

It is recommended that your heating system is serviced regularly
and that you complete the appropriate Service Interval Record Below.

Service Provider. Before completing the appropriate Service Interval Record below, please ensure you have carried out the service as described in the boiler manufacturer's instructions. Always use the manufacturer's specified spare part when replacing all controls

SERVICE 1 DATE
ENGINEER NAME
COMPANY NAME
TEL No.
CORGI ID CARD SERIAL No.
COMMENTS
SIGNATURE

SERVICE 2 DATE
ENGINEER NAME
COMPANY NAME
TEL No.
CORGI ID CARD SERIAL No.
COMMENTS
SIGNATURE

SERVICE 3 DATE
ENGINEER NAME
COMPANY NAME
TEL No.
CORGI ID CARD SERIAL No.
COMMENTS
SIGNATURE

SERVICE 4 DATE
ENGINEER NAME
COMPANY NAME
TEL No.
CORGI ID CARD SERIAL No.
COMMENTS
SIGNATURE

SERVICE 5 DATE
ENGINEER NAME
COMPANY NAME
TEL No.
CORGI ID CARD SERIAL No.
COMMENTS
SIGNATURE

SERVICE 6 DATE
ENGINEER NAME
COMPANY NAME
TEL No.
CORGI ID CARD SERIAL No.
COMMENTS
SIGNATURE

SERVICE 7 DATE
ENGINEER NAME
COMPANY NAME
TEL No.
CORGI ID CARD SERIAL No.
COMMENTS
SIGNATURE

SERVICE 8 DATE
ENGINEER NAME
COMPANY NAME
TEL No.
CORGI ID CARD SERIAL No.
COMMENTS
SIGNATURE

SERVICE 9 DATE
ENGINEER NAME
COMPANY NAME
TEL No.
CORGI ID CARD SERIAL No.
COMMENTS
SIGNATURE

SERVICE 10 DATE
ENGINEER NAME
COMPANY NAME
TEL No.
CORGI ID CARD SERIAL No.
COMMENTS
SIGNATURE

Vokèra
heating for life

Cod. 10030244- 07/07 - Ed. 1

Registered address:
Vokèra Ltd
Borderlake House
Unit 7 Riverside Industrial Estate
London Colney
Herts AL2 1HG

enquiries@vokera.co.uk

www.vokera.co.uk
www.vokera.ie

Sales, General Enquires
T 0844 391 099
F 0844 391 0998

Vokèra Ireland
West Court, Callan
Co Kilkenny
T 056 7755057
F 056 7755060

Vokèra Limited reserve the right to change
specification without prior notice
Consumers statutory rights are not affected.

A Riello Group Company.
Company Reg No: 1047779