spares & parts online
IBASIS.co.uk©

Vokèra
heating for life

Unica BHE

High efficiency combi boiler

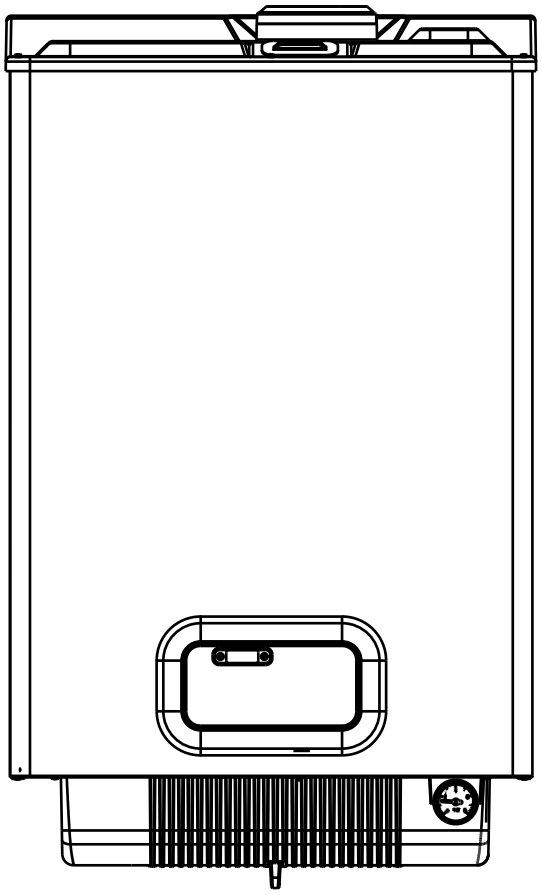

Installation & Servicing Instructions

CE 0694
0694BR1207

THESE INSTRUCTIONS TO BE RETAINED BY USER

G.C. NUMBER
UNICA 32 BHE N° 47-094-99

benchmark
COLLECTIVE MARK
THE MARK OF QUALITY FOR THE INSTALLATION, COMMISSIONING AND SERVICING OF DOMESTIC HEATING AND HOT WATER SYSTEMS

Vokèra is a licensed member of the Benchmark scheme which aims to improve the standards of installation and commissioning of domestic hot water systems in the UK.

Contents

Design principles & operating sequence		Page
1.1	Principle components	3
1.2	Mode of operation (at rest)	3
1.3	Mode of operation (heating)	3
1.4	Mode of operation (Hot water)	3
1.5	Safety devices	3

Technical data		Page
2.1	Central heating	4
2.2	Domestic hot water	4
2.3	Gas pressures	4
2.4	Expansion vessel	4
2.5	Dimensions	4
2.6	Clearances	4
2.7	Connections	4
2.8	Electrical	4
2.9	Flue details (concentric)	4
2.9A	Flue details (twin pipes)	4
2.10	Efficiency	4
2.11	Emissions	4
2.12	Pump duty	5

General requirements (UK)		Page
3.1	Related documents	6
3.2	Location of appliance	6
3.3	Gas supply	6
3.4	Flue system	6
3.5	Air supply	6
3.6	Water circulation	6
3.7	Electrical supply	7
3.8	Mounting on a combustible surface	7
3.9	Timber framed buildings	7
3.10	Inhibitors	7
3.11	Showers	7

General requirements (EIRE)		Page
3A.1	Related documents	8
3A.2	Location of appliance	8
3A.3	Gas supply	8
3A.4	Flue system	8
3A.5	Air supply	8
3A.6	Water circulation	8
3A.7	Electrical supply	9
3A.8	Mounting on a combustible surface	9
3A.9	Timber framed buildings	9
3A.10	Inhibitors	9
3A.11	Showers	9
3A.12	Declaration of conformity	9

Installation		Page
4.1	Delivery	10
4.2	Contents	10
4.3	Unpacking	10
4.4	Preparation for mounting the appliance	10
4.5	Fitting the flue	11
4.6	Connecting the gas & water	15
4.7	Electrical connections	16

Commissioning		Page
5.1	Gas supply installation	17
5.2	The heating system	17
5.3	Initial filling of the system	17
5.4	Initial flushing of the system	17
5.5	Pre-operation checks	17
5.6	Initial lighting	17
5.7	Checking gas pressure & combustion analysis	17
5.8	Final flushing of the heating system	18
5.9	Setting the boiler operating temperature	18
5.10	Setting the system design pressure	18
5.11	Regulating the central heating system	18
5.12	Final checks	18
5.13	Instructing the user	18

Servicing		Page
6.1	General	19
6.2	Routine annual servicing	19
6.3	Replacement of components	19
6.4	Component removal procedure	19
6.5	Pump assembly	19
6.6	Safety valve	20
6.7	Lower automatic air release valves	20
6.8	Water pressure switch	20
6.9	Primary thermistor	20
6.10	Return thermistor	20
6.11	Printed circuit board	20
6.12	Gas valve	20
6.13	Electrodes and condense sensor	21
6.14	Flue fan & mixer	21
6.15	Burner	21
6.16	Main heat exchanger	22
6.17	Automatic by-pass	22
6.18	Expansion vessel	22
6.19	Condense trap removal	22
6.20	Flue collector removal	23

Checks, adjustments and fault finding		Page
7.1	Checking appliance operation	24
7.2	Appliance modes of operation	24
7.3	Appliance fan speed	25
7.4	Checking the CO_2 & adjusting the valve	25
7.5	Combustion analysis test	26
7.6	Checking the expansion vessel	26
7.7	External faults	26
7.8	Electrical checks	26
7.9	Fault finding	27
7.10	Boiler configuration	27
7.11	Final fault codes	27

Wiring diagrams		Page
8.1	External wiring	28
8.2	Typical control applications	28
8.3	Other devices	28

Exploded diagrams		Page
9.1	Table 1	30
9.2	Table 2	31
9.3	Table 3	31
9.4	Table 4	32
9.5	Table 5	33

L.P.G. instructions		Page
10.1	Related documents	34
10.2	Technical data	34
10.3	Converting the appliance gas type	34
10.4	Gas supply	34
10.5	Gas supply installation	34
10.6	Adjusting the gas valve	34
10.7	Appliance fan speed	35

	Benchmark	36-37

INTRODUCTION

The Unica BHE is a high-efficiency combination boiler with an output to DHW of 32kW. This appliance – by design – incorporates electronic ignition, circulating pump, expansion vessel, safety valve, pressure gauge and automatic by-pass.
The Unica is produced as room sealed, category II2H3P appliances, suitable for internal and external wall mounting applications. Each appliance is provided with a fan powered flue outlet with an annular co-axial combustion air intake that can be rotated – horizontally – through 360 degrees for various horizontal or vertical applications. The Unica BHE can also be used with the Vokera twin flue system.

The Unica BHE is approved for use with B23, C13 & C33 type flue applications.
These appliances are designed for use with a sealed system only; consequently they are not intended for use on open vented systems.
This booklet is an integral part of the appliance. It is therefore necessary to ensure that the booklet is handed to the person responsible for the property in which the appliance is located/installed. A replacement copy can be obtained from Vokera customer services.
There are no banned substances used in the manufacture of these appliances.

fig. 1

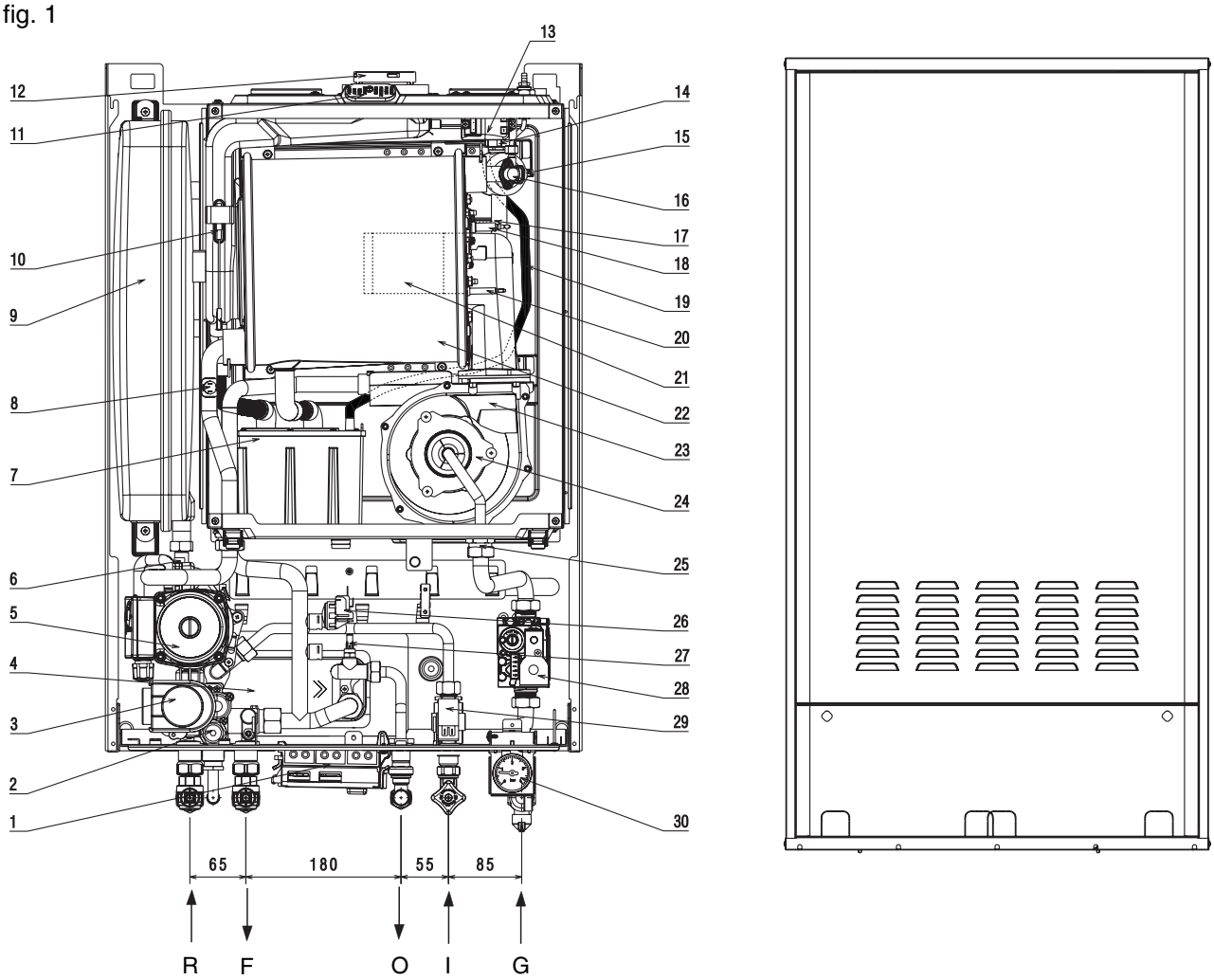

General layout (fig. 1)

1 Electrical connection box
2 Safety valve
3 Three port valve actuator
4 Domestic hot water heat exchanger
5 Pump
6 Bottom auto air vent (AAV)
7 Condense trap
8 Return sensor
9 Expansion vessel
10 Fumes thermostat
11 Flue gas analysis test point
12 Flue outlet & air intake
13 Ignition transformer
14 Top AAV
15 Flow sensor
16 High limit thermostat
17 Sensing Electrode
18 Spark Electrode
19 Top AAV pipe
20 Condensate level sensor
21 Cylindrical Burner
22 Main heat exchanger
23 Fan assembly
24 Mixer
25 Injector
26 Pressure switch
27 Domestic hot water sensor
28 Gas valve
29 DHW flow switch
30 Pressure gauge

R Heating return connection
F Heating flow connection
G Gas connection
O Hot water outlet
I Cold water inlet

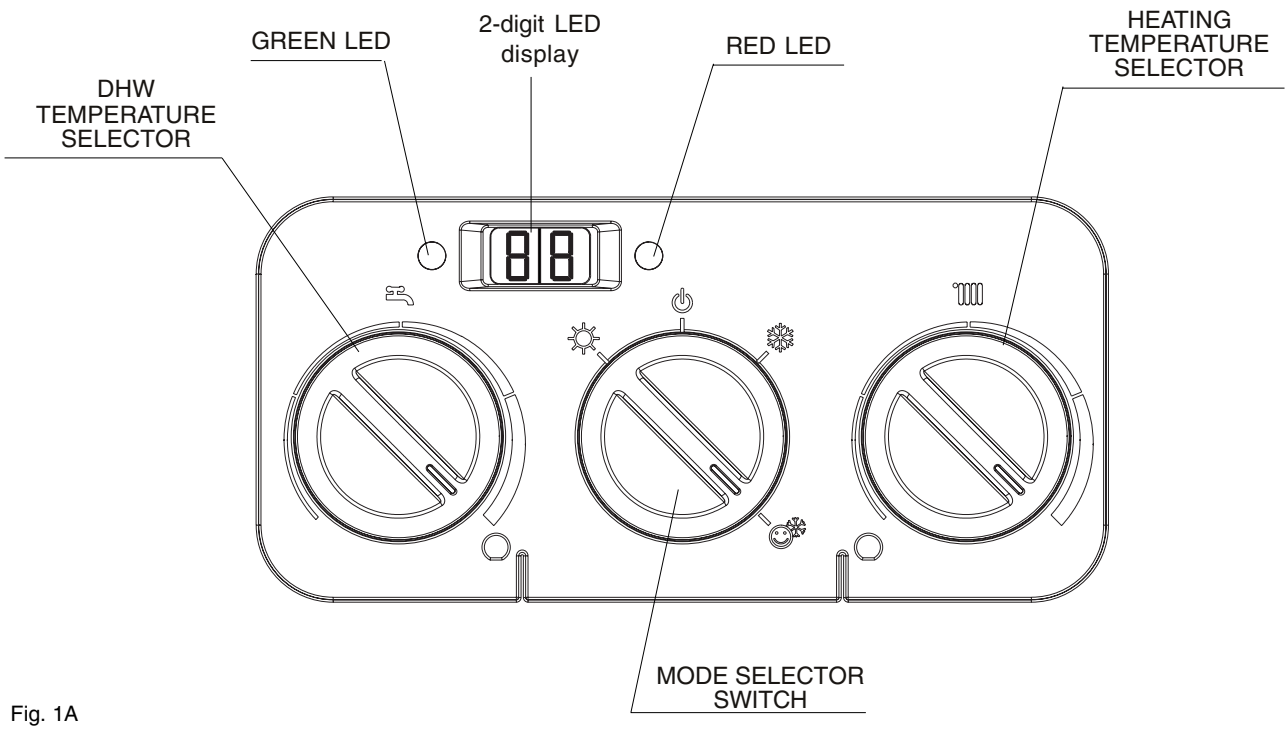

Fig. 1A

	Hot water only	Select this position if you want the boiler to supply hot water only (no heating)
	Boiler at OFF/standby	Select this position when you want the boiler to be switched off for short periods (days) or if the boiler requires to be reset (refer to users handbook)
	Heating & hot water (economy)	Select this position when you want the boiler to respond to a heating request from the time-clock/programmer
	Heating & hot water with pre-heat	Select this position when you want the boiler to respond to a heating request from the time-clock/programmer (comfort) and you want the domestic hot water to be pre-heated
	DHW temperature selector	Move the selector clockwise to increase the hot water outlet temperature, or counter-clockwise to reduce the temperature
	Heating temperature selector	Move the selector clockwise to increase the heating outlet temperature, or counter-clockwise to reduce the temperature
	2-digit LED display	Displays the current outlet temperature of the boiler. During a fault condition, the appropriate fault code will be displayed (refere to the users handbook for instructions regarding fault codes)
	Green LED lit	Boiler is working/responding to a heating/hot water request
	Red LED lit	Boiler has identified a fault and has failed-safe. Refer to users handbook for instructions on how to reset

1.1 PRINCIPLE COMPONENTS

- A fully integrated electronic control board featuring electronic temperature control, anti-cycle control, pump over-run, self-diagnostic fault indicator, full air/gas modulation.
- Radial aluminium heat exchanger.
- Electronic ignition with flame supervision
- Integral high-head pump
- Fan
- Expansion vessel
- Water pressure switch
- Condensate level sensor
- Pressure gauge
- Safety valve

1.2 MODE OF OPERATION (at rest)

When the appliance is at rest and there are no requests for heating or hot water, the following functions are active:

- frost-protection system – the frost-protection system protects the appliance against the risk of frost damage both for CH and DHW. For CH line, if the main temperature falls to 6°C, the appliance will function on minimum power until the temperature on main reaches 35°C.
  Moreover if the DHW temperature falls to 4°C, the appliance will function on minimum power until the temperature on main reaches 55°C.
- anti-block function – the anti-block function enables the pump and divertor valve actuator to be energised for short periods, when the appliance has been inactive for more than 24-hours.

1.3 MODE OF OPERATION (Heating)

When there is a request for heat via the time clock and/or any external control, the pump and fan are started, the fan speed will modulate until the correct signal voltage is received at the control PCB. At this point an ignition sequence is enabled.

Ignition is sensed by the electronic circuit to ensure flame stability at the burner. Once successful ignition has been achieved, the electronic circuitry increases the gas rate to 75% for a period of 15 minutes. Thereafter, the boiler's output will either be increase to maximum or modulate to suit the set requirement.

When the appliance reaches the desired temperature the burner will shut down and the boiler will perform a three-minute anti-cycle (timer delay). When the request for heat has been satisfied the appliance pump and fan may continue to operate to dissipate any residual heat within the appliance.

1.4 MODE OF OPERATION (Hot water)

When there is a request for DHW via a hot water outlet or tap, the pump and fan are started, the fan speed will modulate until the correct signal voltage is received at the control PCB. At this point an ignition sequence is enabled.

Ignition is sensed by the electronic circuit to ensure flame stability at the burner. Once successful ignition has been achieved, the electronic circuitry increases the gas rate to maximum or will modulate output to stabilise the temperature.

In the event of the appliance exceeding the desired temperature (set point) the burner will shut down until the temperature drops. When the request for DHW has been satisfied the appliance pump and fan may continue to operate to dissipate any residual heat within the appliance.

1.5 SAFETY DEVICES

When the appliance is in use, safe operation is ensured by:

- a water pressure switch that monitors system water pressure and will de-activate the pump, fan, and burner should the system water pressure drop below the rated tolerance;
- fan speed sensor to ensure safe operation of the burner;
- a high limit thermostat that over-rides the temperature control circuit to prevent or interrupt the operation of the burner;
- flame sensor that will shut down the burner when no flame signal is detected;
- a sensor that interrupts the operation of the appliance if the condense pipe becomes blocked;
- a safety valve which releases excess pressure from the primary circuit.

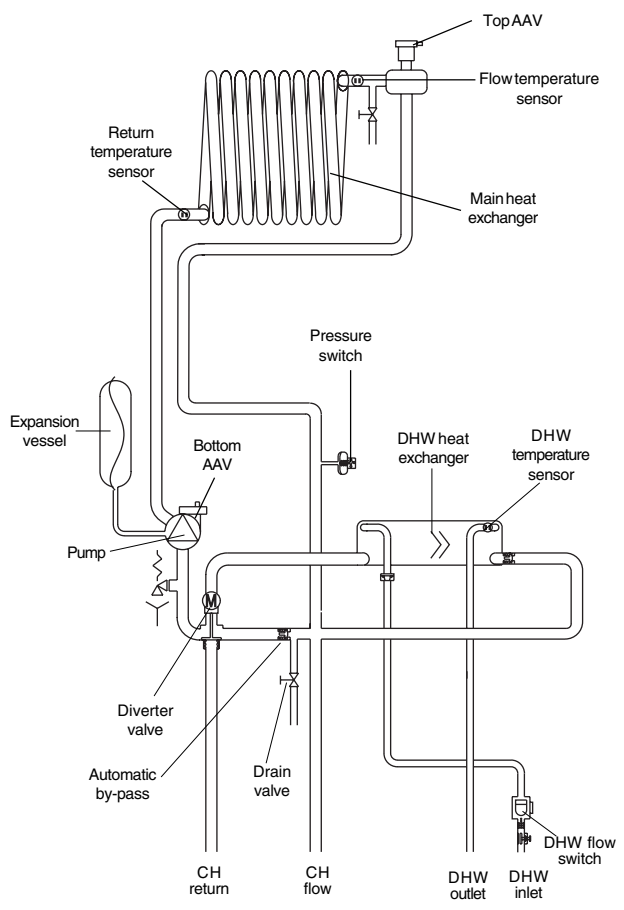

Fig. 2

SECTION 2 TECHNICAL DATA

2.1 Central Heating	Unica 32BHE
Heat input (kW)	25
Maximum heat output (kW) 60/80°C	24.45
Minimum heat output (kW) 60/80°C	6.90
Maximum heat output (kW) 30/50°C	26.30
Minimum heat output (kW) 30/50°C	7.47
Minimum working pressure	0.5 bar
Maximum working pressure	3 bar
Minimum flow rate	1000 l/h
2.2 Domestic Hot Water	**Unica 32BHE**
Heat input (kW)	32
Flow Rate: ΔT35°C	13.1 l/pm
Maximum inlet pressure	6.0 bar
Minimum inlet pressure	0.15 bar
Minimum flow rate	350 l/h
2.3 Gas Pressures	**Unica 32BHE**
Inlet pressure (G20)	20.0 mbar
Heating maximum gas rate (m^3/hr)	2.64
DHW maximum gas rate (m^3/hr)	3.38
Minimum gas rate (m^3/hr)	0.74
Injector size (mm)	6.7
2.4 Expansion Vessel	**Unica 32BHE**
Capacity	10-litres
Maximum system volume	91-litres
Pre-charge pressure	1.0 bar
2.5 Dimensions	**Unica 32BHE**
Height (mm)	785
Width (mm)	553
Depth (mm)	268
Dry weight (kg)	??
2.6 Clearances	**UNICA BHE Range**
Sides	Left= 12mm - Right= 25mm
Top	150mm from casing or 25mm above flue elbow (whichever is applicable)
Bottom	150mm
Front	600mm
2.7 Connections	**UNICA BHE Range**
Flow & return	22mm
Gas	15mm
DHW hot & cold	15mm
Safety valve	15mm
Condense	21mm
2.8 Electrical	**Unica 32BHE**
Power consumption (Watts)	150W
Voltage (V/Hz)	230/50
Internal fuse	3.15A T (for PCB) - 3.15A F (for connections block)
External fuse	3A
2.9 Flue Details (concentric)	**Unica 32BHE**
Maximum horizontal flue length (60/100mm)	7.8m
Maximum vertical flue length (60/100mm)	8.8m
Maximum horizontal flue length (80/125mm)	20m
Maximum vertical flue length (80/125mm)	25m
2.9A Flue Details (twin pipes)	**Unica 32BHE**
Maximum horizontal flue length (80mm/80mm)	40m/40m
Maximum vertical flue length (80mm/80mm)	40m/40m
2.10 Efficiency	**Unica 32BHE**
SEDBUK (%)	90.2
2.11 Emissions	**Unica 32BHE**
CO_2 @ maximum output (%)	9.0
CO_2 @ minimum output (%)	9.0
CO/CO_2 ratio @ maximum output	0.002 to 1
CO/CO_2 ratio @ minimum output	0.0001 to 1
CO @ maximum output (mg/kWh)	156.0
CO @ minimum output (mg/kWh)	7.0
NOx @ maximum output mg/kWh)	45.0
NOx @ minimum output (mg/kWh)	20.0
NOx rating	class 5

2.12 PUMP DUTY

Fig. 3 shows the flow-rate available – after allowing for pressure loss through the appliance – for system requirements. When using this graph, apply only the pressure loss of the system. The graph is based on a 20°C temperature differential.

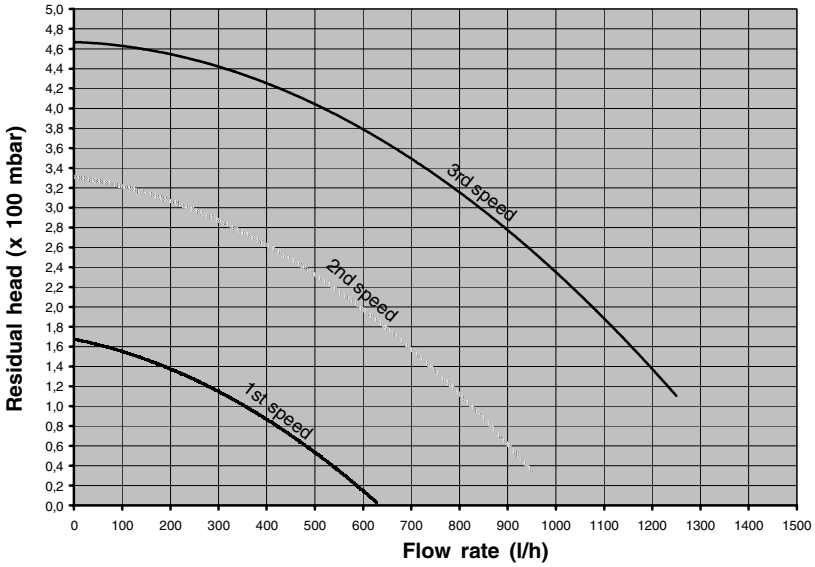

Fig. 3

Fig. 4

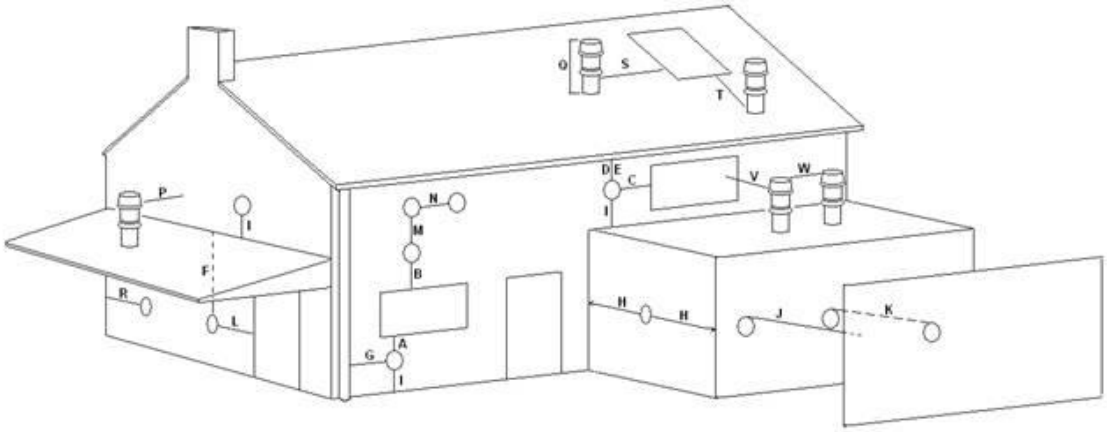

Key	Location	Minimum distance
A	Below an opening (window, air-brick, etc.)	300 mm
B	Above an opening (window, air-brick, etc.)	300 mm
C	To the side of an opening (window, air-brick, etc.)	300 mm
D	Below gutter, drain-pipe, etc.	25 mm
E	Below eaves	25 mm
F	Below balcony, car-port roof, etc.	25 mm
G	To the side of a soil/drain-pipe, etc.	25 mm (60mm for 80/125, 5” flue)
H	From internal/external corner	25 mm (60mm for 80/125, 5” flue)
I	Above ground, roof, or balcony level	300 mm
J	From a surface or boundary facing the terminal	600 mm
K	From a terminal facing a terminal	1200 mm
L	From an opening in the car-port into the building	1200 mm
M	Vertically from a terminal on the same wall	1500 mm
N	Horizontally from a terminal on the same wall	300 mm
P	From a structure to the side of the vertical terminal	300 mm
Q	From the top of the vertical terminal to the roof flashing	As determined by the fixed collar of the terminal
R	To the side of a boundary	300 mm
S	To the side of an opening or window on a pitched roof	600 mm
T	Below an opening or window on a pitched roof	2000 mm
V	From a vertical terminal to an adjacent opening (window, air-brick, etc)	(call Vokera technical for advice)
W	From a vertical terminal to an adjacent vertical terminal	300 mm* (Only if both terminals are the same hight)

This appliance must be installed by a competent person in accordance with the Gas Safety (Installation & Use) Regulations.

3.1 RELATED DOCUMENTS

The installation of this boiler must be in accordance with the relevant requirements of the Gas Safety (Installation & Use) Regulations, the local building regulations, the current I.E.E. wiring regulations, the bylaws of the local water undertaking, the Building Standards (Scotland) Regulation and Building Standards (Northern Ireland) Regulations. It should be in accordance also with any relevant requirements of the local authority and the relevant recommendations of the following British Standard Codes of Practice.

3.2 LOCATION OF APPLIANCE

The appliance may be installed in any room or internal space, although particular attention is drawn to the requirements of the current I.E.E. wiring regulations, and in Scotland, the electrical provisions of the Building Regulations, with respect to the installation of the appliance in a room or internal space containing a bath or shower.

When an appliance is installed in a room or internal space containing a bath or shower, the appliance or any control pertaining to it must not be within reach of a person using the bath or shower.

The location chosen for the appliance must permit the provision of a safe and satisfactory flue and termination. The location must also permit an adequate air supply for combustion purposes and an adequate space for servicing and air circulation around the appliance. Where the installation of the appliance will be in an unusual location special procedures may be necessary, BS 6798 gives detailed guidance on this aspect.

A compartment used to enclose the appliance must be designed and constructed specifically for this purpose. An existing compartment/cupboard may be utilised provided that it is modified to suit. Details of essential features of compartment/cupboard design including airing cupboard installations are given in BS 6798.

3A.2 LOCATION OF APPLIANCE

The appliance may be installed in any room or internal space, although particular attention is drawn to the requirements of the current ETCI National Rules for Electrical Installations, and I.S. 813, Annex K.

When an appliance is installed in a room or internal space containing a bath or shower, the appliance or any control pertaining to it must not be within reach of a person using the bath or shower.

The location chosen for the appliance must permit the provision of a safe and satisfactory flue and termination. The location must also permit an adequate air supply for combustion purposes and an adequate space for servicing and air circulation around the appliance. Where the installation of the appliance will be in an unusual location special procedures may be necessary, refer to I.S. 813 for detailed guidance on this aspect.

A compartment used to enclose the appliance must be designed and constructed specifically for this purpose. An existing compartment/cupboard may be utilised provided that it is modified to suit.

3.3 GAS SUPPLY

The gas meter – as supplied by the gas supplier – must be checked to ensure that it is of adequate size to deal with the maximum rated input of all the appliances that it serves. Installation pipes must be fitted in accordance with BS 6891.

Pipe work from the meter to the appliance must be of adequate size. Pipes of a smaller size than the appliance gas inlet connection must not be used. The installation must be tested for tightness in accordance with BS6891.

If the gas supply serves more than one appliance, it must be ensured that an adequate supply is maintained to each appliance when they are in use at the same time.

BS 5440	**PART 1**	**FLUES**
BS 5440	**PART 2**	**FLUES & VENTILATION**
BS 5449	**PART 1**	**FORCED CIRCULATION HOT WATER SYSTEMS**
BS 5546		**INSTALLATION OF GAS HOT WATER SUPPLIES FOR DOMESTIC PURPOSES**
BS 6798		**INSTALLATION OF BOILERS OF RATED INPUT NOT EXCEEDING 60kW**
BS 6891		**LOW PRESSURE INSTALLATION PIPES**
BS 7074	**PART 1**	**APPLICATION, SELECTION, AND INSTALLTION OF EXPANSION VESSELS AND ANCILLARY EQUIPMENT FOR SEALED WATER SYSTEMS**

3.4 FLUE SYSTEM

The terminal should be located where the dispersal of combustion products is not impeded and with due regard for the damage and discoloration that may occur to building products located nearby. The terminal must not be located in a place where it is likely to cause a nuisance (see fig. 4).

In cold and/or humid weather, water vapour will condense on leaving the terminal; the effect of such pluming must be considered.

If installed less than 2m above a pavement or platform to which people have access (including balconies or flat roofs) the terminal must be protected by a guard of durable material.

The guard must be fitted centrally over the terminal. Refer to BS 5440 Part 1, when the terminal is 0.5 metres (or less) below plastic guttering or 1 metre (or less) below painted eaves.

3.5 AIR SUPPLY

The following notes are intended for general guidance only. This appliance is a room-sealed, fan-flued boiler, consequently it does not require a permanent air vent for combustion air supply. When installed in a cupboard or compartment, ventilation for cooling purposes is also not required.

3.6 WATER CIRCULATION

Detailed recommendations are given in BS 5449 Part 1 and BS 6798. The following notes are for general guidance only.

3.6.1 PIPEWORK

It is recommended that copper tubing to BS 2871

Part 1 is used in conjunction with soldered capillary joints. Where possible pipes should have a gradient to ensure air is carried naturally to air release points and that water flows naturally to drain cocks. Except where providing useful heat, pipes should be insulated to avoid heat loss and in particular to avoid the possibility of freezing. Particular attention should be paid to pipes passing through ventilated areas such as under floors, loft space and void areas.

3.6.2 AUTOMATIC BY-PASS

The appliance has a built-in automatic by-pass, consequently there is no requirement for an external by-pass, however the design of the system should be such that it prevents boiler 'cycling'.

3.6.3 DRAIN COCKS

These must be located in accessible positions to facilitate draining of the appliance and all water pipes connected to the appliance. The drain cocks must be manufactured in accordance with BS 2879.

3.6.4 AIR RELEASE POINTS

These must be positioned at the highest points in the system where air is likely to be trapped. They should be used to expel trapped air and allow complete filling of the system.

3.6.5 EXPANSION VESSEL

The appliance has an integral expansion vessel to accommodate the increased volume of water when the system is heated. It can accept up to 8 (28HE) or 10 (32 & 36HE) litres of expansion from within the system, generally this is sufficient, however if the system has an unusually high water content, it may be necessary to provide additional expansion capacity (see 6.19).

3.6.6 FILLING POINT

A method for initial filling of the system and replacing water lost during servicing etc. directly from the mains supply, is provided (see fig. 5). This method of filling complies with the current Water Supply (Water Fittings) Regulations 1999 and Water By-laws 2000 (Scotland). If an alternative location is preferred, it should be connected as detailed in fig.5.

fig.5

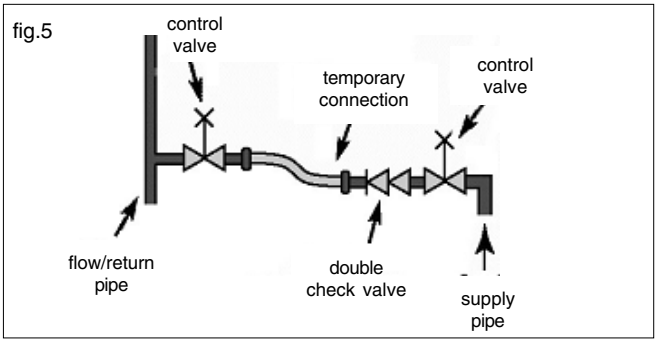

3.6.7 LOW PRESSURE SEALED SYSTEM

An alternative method of filling the system would be from an independent make-up vessel or tank mounted in a position at least 1 metre above the highest point in the system and at least 5 metres above the boiler (see fig. 5A).

The cold feed from the make-up vessel or tank must be fitted with an approved non-return valve and stopcock for isolation purposes. The feed pipe should be connected to the return pipe as close to the boiler as possible.

3.6.8 FREQUENT FILLING

Frequent filling or venting of the system may be indicative of a leak. Care should be taken during the installation of the appliance to ensure all aspects of the system are capable of withstanding pressures up to at least 3 bar.

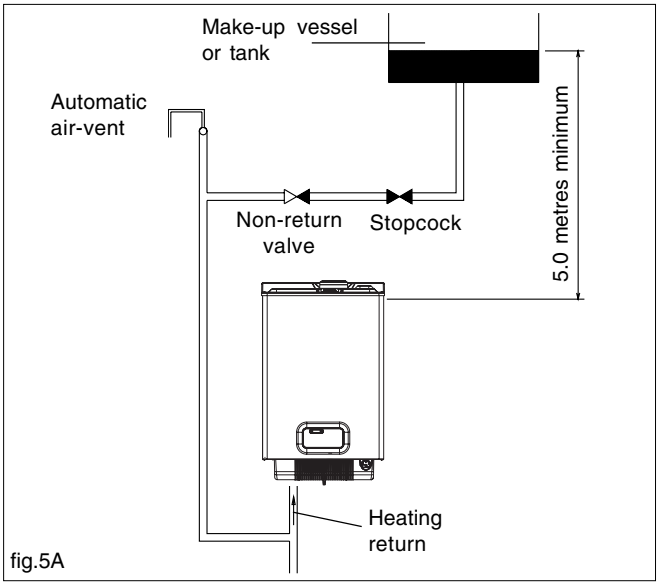

fig.5A

3.7 ELECTRICAL SUPPLY

The appliance is supplied for operation on 230V @ 50Hz electrical supply; it must be protected with a 3-amp fuse. The method of connection to the mains electricity supply must allow for complete isolation from the supply. The preferred method is by using a double-pole switch with a contact separation of at least 3,5mm (3° high-voltage category). The switch must only supply the appliance and its corresponding controls, i.e. time clock, room thermostat, etc. Alternatively an unswitched shuttered socket with a fused 3-pin plug both complying with BS 1363 is acceptable.

3.8 MOUNTING ON A COMBUSTIBLE SURFACE

If the appliance is to be fitted on a wall of combustible material, a sheet of fireproof material must protect the wall.

3.9 TIMBER FRAMED BUILDINGS

If the appliance is to be fitted in a timber framed building, it should be fitted in accordance with the Institute of Gas Engineers publication (IGE/UP/7) 'Guide for Gas Installations in Timber Frame Buildings'.

3.10 INHIBITORS

Vokera recommend that an inhibitor - suitable for use with copper and aluminium heat exchangers - is used to protect the boiler and system from the effects of corrosion and/or electrolytic action. The inhibitor must be administered in strict accordance with the manufacturers instructions*.

*Water treatment of the complete heating system - including the boiler - should be carried out in accordance with BS 7593 and the Domestic Water Treatment Association's (DWTA) code of practice.

3.11 SHOWERS

If the appliance is intended for use with a shower, the shower must be thermostatically controlled and be suitable for use with a combination boiler.

This appliance must be installed by a competent person in accordance with and defined by, the Standard Specification (Domestic Gas Installations) Declaration (I.S. 813).

3A.1 RELATED DOCUMENTS

The installation of this boiler must be in accordance with the relevant requirements of the local building regulations, the current ETCI National Rules for Electrical Installations and the bylaws of the local water undertaking.
It should be in accordance also with any relevant requirements of the local and/or district authority.

3A.2 LOCATION OF APPLIANCE

The appliance may be installed in any room or internal space, although particular attention is drawn to the requirements of the current ETCI National Rules for Electrical Installations, and I.S. 813, Annex K.
When an appliance is installed in a room or internal space containing a bath or shower, the appliance or any control pertaining to it must not be within reach of a person using the bath or shower.
The location chosen for the appliance must permit the provision of a safe and satisfactory flue and termination. The location must also permit an adequate air supply for combustion purposes and an adequate space for servicing and air circulation around the appliance. Where the installation of the appliance will be in an unusual location special procedures may be necessary, refer to I.S. 813 for detailed guidance on this aspect.
A compartment used to enclose the appliance must be designed and constructed specifically for this purpose. An existing compartment/cupboard may be utilised provided that it is modified to suit.
This appliance is not suitable for external installation.

3A.3 GAS SUPPLY

The gas meter – as supplied by the gas supplier – must be checked to ensure that it is of adequate size to deal with the maximum rated input of all the appliances that it serves. Installation pipes must be fitted in accordance with I.S. 813.
Pipe work from the meter to the appliance must be of adequate size. Pipes of a smaller size than the appliance gas inlet connection must not be used. The installation must be tested for tightness in accordance with I.S. 813.
If the gas supply serves more than one appliance, it must be ensured that an adequate supply is maintained to each appliance when they are in use at the same time.

3A.4 FLUE SYSTEM

The terminal should be located where the dispersal of combustion products is not impeded and with due regard for the damage and discoloration that may occur to building products located nearby.
The terminal must not be located in a place where it is likely to cause a nuisance (see I.S. 813).
In cold and/or humid weather, water vapour will condense on leaving the terminal; the effect of such pluming must be considered.
If installed less than 2m above a pavement or platform to which people have access (including balconies or flat roofs) the terminal must be protected by a guard of durable material. The guard must be fitted centrally over the terminal.
Refer to I.S. 813, when the terminal is 0.5 metres (or less) below plastic guttering or 1 metre (or less) below painted eaves.

3A.5 AIR SUPPLY

The following notes are intended for general guidance only.
This appliance is a room-sealed, fan-flued boiler, consequently it does not require a permanent air vent for combustion air supply.
When installed in a cupboard or compartment, ventilation for cooling purposes is also not required.

3A.6 WATER CIRCULATION

Specific recommendations are given in I.S. 813. The following notes are for general guidance only.

3A.6.1 PIPEWORK

It is recommended that copper tubing be used in conjunction with soldered capillary joints.
Where possible pipes should have a gradient to ensure air is carried naturally to air release points and that water flows naturally to drain cocks.
Except where providing useful heat, pipes should be insulated to avoid heat loss and in particular to avoid the possibility of freezing. Particular attention should be paid to pipes passing through ventilated areas such as under floors, loft space and void areas.

3A.6.2 AUTOMATIC BY-PASS

The appliance has a built-in automatic by-pass, consequently there is no requirement for an external by-pass, however the design of the system should be such that it prevents boiler 'cycling'.

3A.6.3 DRAIN COCKS

These must be located in accessible positions to facilitate draining of the appliance and all water pipes connected to the appliance.

3A.6.4 AIR RELEASE POINTS

These must be positioned at the highest points in the system where air is likely to be trapped. They should be used to expel trapped air and allow complete filling of the system.

3A.6.5 EXPANSION VESSEL

The appliance has an integral expansion vessel to accommodate the increased volume of water when the system is heated. It can accept up to 8 (28HE) or 10 (32 & 36HE) litres of expansion from within the system, generally this is sufficient, however if the system has an unusually high water content, it may be necessary to provide additional expansion capacity (see 6.19).

3A.6.6 FILLING POINT

A method for initial filling of the system and replacing water lost during servicing etc. is provided (see fig.8). You should ensure this method of filling complies with the local water authority regulations.

3A.6.7 LOW PRESSURE SEALED SYSTEM

An alternative method of filling the system would be from an independent make-up vessel or tank mounted in a position at least 1 metre above the highest point in the system and at least 5 metres above the boiler (see fig. 5A). The cold feed from the make-up vessel or tank must be fitted with an approved non-return valve and stopcock for isolation purposes. The feed pipe should be connected to the return pipe as close to the boiler as possible.

3A.6.8 FREQUENT FILLING

Frequent filling or venting of the system may be indicative of a leak. Care should be taken during the installation of the appliance to ensure all aspects of the system are capable of withstanding pressures up to at least 3 bar.

3A.7 ELECTRICAL SUPPLY

The appliance is supplied for operation on 230V @ 50Hz electrical supply; it must be protected with a 3-amp fuse. The method of connection to the mains electricity supply must allow for complete isolation from the supply. The preferred method is by using a double-pole switch with a contact separation of at least 3,5 mm (3° high-voltage category). The switch must only supply the appliance and its corresponding controls, i.e. time clock, room thermostat, etc.

3A.8 MOUNTING ON A COMBUSTIBLE SURFACE

If the appliance is to be fitted on a wall of combustible material, a sheet of fireproof material must protect the wall.

3A.9 TIMBER FRAMED BUILDINGS

If the appliance is to be fitted in a timber framed building, it should be fitted in accordance with I.S. 813 and local Building Regulations.

The Institute of Gas Engineers publication (IGE/UP/7) 'Guide for Gas Installations in Timber Frame Buildings' gives specific advice on this type of installation.

3A.10 INHIBITORS

Vokera recommend that an inhibitor - suitable for use with aluminium heat exchangers - is used to protect the boiler and system from the effects of corrosion and/or electrolytic action. The inhibitor must be administered in strict accordance with the manufacturers instructions*.

*Water treatment of the complete heating system - including the boiler - should be carried out in accordance with I.S. 813 and the Domestic Water Treatment Association's (DWTA) code of practice.

3A.11 SHOWERS

If the appliance is intended for use with a shower, the shower must be thermostatically controlled and be suitable for use with a combination boiler.

3A.12 DECLARATION OF CONFORMITY

A Declaration of Conformity (as defined in I.S. 813) must be provided on completion of the installation.

A copy of the declaration must be given to the responsible person and also to the gas supplier if required.

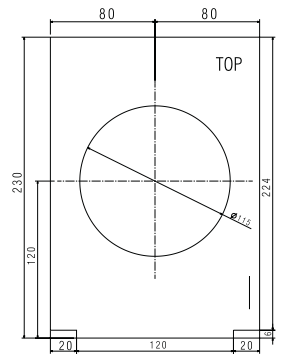

fig. 6

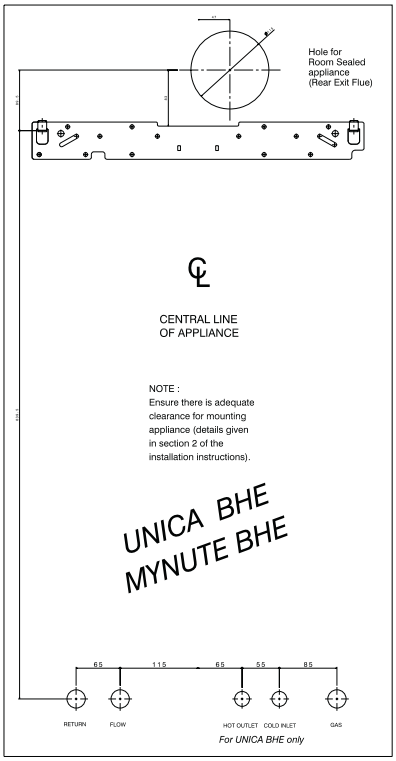

fig. 7

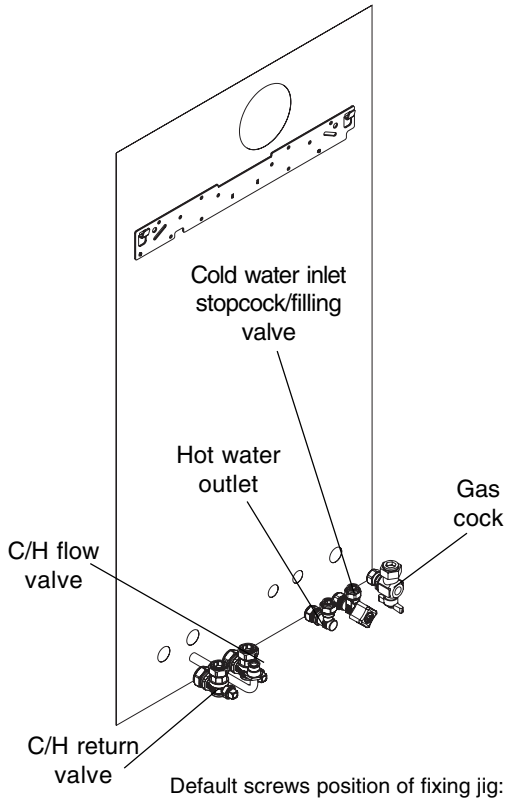

fig. 8 Default screws position of fixing jig: No. 3

4.1 DELIVERY

Due to the weight of the appliance it may be necessary for two people to lift and attach the appliance to its mounting. The appliance is contained within a heavy-duty cardboard carton. Lay the carton on the floor with the writing the correct way up.

4.1.2 APPLICATION

The Unica BHE can be installed within the property or external to the property. Although the appliance is certified IPx5D, if it's to be installed externally, it may be necessary to provide reasonable protection from heavy or persistent rain however this will be purely dependant on the location of the appliance and local conditions. Alternatively, the appliance enclosure (see fig 1B) can be used (not supplied).

4.2 CONTENTS

Contained within the carton is:

- the boiler
- the wall bracket & fixing jig
- template
- an accessories pack containing appliance service connections and washers
- the instruction pack containing the installation & servicing instructions, user instructions, guarantee registration card and a 3-amp fuse.

4.3 UNPACKING

At the top of the carton pull both sides open – do not use a knife – unfold the rest of the carton from around the appliance, carefully remove all protective packaging from the appliance and lay the accessories etc. to one side. Protective gloves should be used to lift the appliance, the appliance back-frame should be used for lifting points.

4.3.2 PREPARATION FOR MOUNTING THE APPLIANCE (external application)

The appliance and/or the appliance enclosure should be mounted on a smooth, vertical, noncombustible surface, which must be capable of supporting the full weight of the appliance and/or enclosure. Care should be exercised when determining the position of the appliance with respect to hidden obstructions such as pipes, cables, etc. When the position of the appliance has been decided - using the template supplied - carefully mark the position of the wall-mounting bracket (see fig. 6) and flue-hole (if applicable).

4.3.3 IMPORTANT

The Unica BHE can be used on various applications **(4.1.2). The following instructions relate to external applications, i.e. external to the property or dwelling.**

4.4 PREPARATION FOR MOUNTING THE APPLIANCE

The appliance should be mounted on a smooth, vertical, non-combustible surface, which must be capable of supporting the full weight of the appliance. Care should be exercised when determining the position of the appliance with respect to hidden obstructions such as pipes, cables, etc.

When the position of the appliance has been decided – using the template supplied – carefully mark the position of the wall-mounting bracket (see fig. 8) and flue-hole (if applicable). If you intend to run the pipe-work vertically behind the boiler, move the screws on the fixing jig from the default position (No. 3) to position No. 5. You will also require a spacer kit, part No. 435 (see 4.6).

4.4.1 EXTERNAL APPLICATIONS USING THE ENCLOSURE

The Unica BHE boiler can be used withthe enclosure (fig 1B). The Enclosure has been designed to be recessed into an external wall or surface to give a flush finish. It can however, be mounted onto an external wall if required.

Should this application be preferred, it's recommended that any openings on the top of the enclosure are sealed with a suitable silicone sealant in order to minimise the ingress or rainwater.

The use of the enclosure allows the installation pipework to be installed prior to the appliance being installed.

Due to the enclosure being installed external to the property, the flueing arrangements for the appliance can be simplified.

PREPARATION

Refer to the enclosure instructions (supplied) for specific installation instructions and details on the required size of opening.

The enclosure is supplied with 'knock-out' panels that allow the appliance flue outlet to routed to the left, right, or vertically.

In addition, the flue can be routed through the front of the enclosure.

The route and termination of the flue outlet must be considered prior to the installation of the enclosure. Refer to the relevant sections within this installation booklet and the enclosure instructions for guidance, and Install the pipework and electrical supply prior to the fixing of the enclosure. Additionally, if the flue system is to be routed within the fabric of the property, then it's advisable to carry this out before fitting the enclosure.

At this point it will be necessary to remove the 'knock-out' panels that are specific to the route of the flue system and pipework.

FIXING

Secure the enclosure to the wall using the relevant fixing points, taking care to ensure that it is level and corresponds to the pre-installed pipework and/or flue system.

Alternatively the enclosure can be secured to an external wall by modifying the rear panel to accept fixing screws or bolts.

MOUNTING THE APPLIANCE

Mount the appliance onto the enclosure as indicated in the enclosure instructions.

4.4.2 EXTERNAL APPLICATIONS WITHOUT THE ENCLOSURE

The Unica boiler can be installed without the requirement of an enclosure providing that some form of protection is used to minimise the risk of water penetration into the appliance (see fig 9A).

PREPARATION

Using the template and details in figure 6 and 7 as a guide, secure the appliance wall bracket to the external wall and mount the appliance to the wall bracket.

NOTE
The fixing holes for the wall-mounting bracket should be drilled and plugged, and an appropriate type and quantity of fixing should be used to ensure that the bracket is mounted securely.

4.5 FITTING THE FLUE

The top flue outlet permits both horizontal and vertical flue applications to be considered, alternatively, the Vokera twin flue system can be utilised if longer flue runs are required.

4.5.1 CONCENTRIC HORIZONTAL FLUE

(For concentric vertical flue, see 4.5.2).
(For twin flue applications, see 4.5.3).
The appliance can be used with either the Vokera condensing 60/100mm concentric flue system or the optional 80/125mm concentric flue system.

NOTE
These instructions relate **only** to the Vokera condensing 60/100mm concentric flue system. For specific details on the installation of the 80/125mm concentric flue system please refer to the instructions supplied.
The appliance flue outlet elbow can be rotated through 360º on its vertical axis. In addition the flue may be extended from the outlet elbow in the horizontal plane (see 2.9). A reduction must also be made to the maximum length (see table below) when additional bends are used.

Reduction for additional bends

Bend	Reduction in maximum flue length for each bend
45º bend	0.5 metre
90º bend	1.0 metre

Horizontal flue terminals and accessories

Part No.	Description	Length
520	Horizontal flue kit	900mm
521	Telescopic flue kit	350/530mm
522	Plume management kit	1370mm
523	90-degree bend	N/A
524	45-degree bends (pair)	N/A
525	500mm extension	500mm
526	1000mm extension	1000mm
527	2000m extension	2000mm
528	Telescopic extension	350/730mm
529	Wall bracket pack (5)	208mm

Using the template provided, mark and drill a 115mm level hole for the passage of the flue pipe.

Note that if extending the flue, the hole should be drilled at a higher position taking into account the 1-3 degree fall back of extension pipes (Fig. 9C).

The fixing holes for the wall-mounting bracket/fixing jig should now be drilled and plugged, an appropriate type and quantity of fixing should be used to ensure that the bracket is mounted securely. Once the bracket has been secured to the wall, mount the appliance onto the bracket.

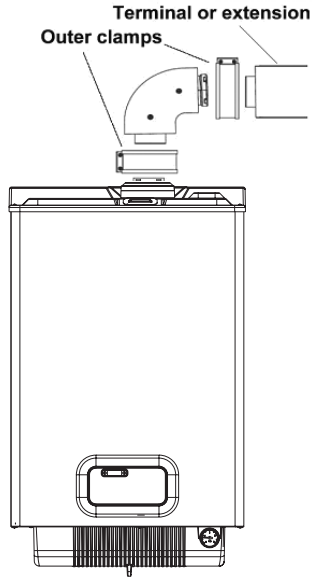

Fig. 9

FITTING THE HORIZONTAL FLUE KIT
Carefully measure the distance from the centre of the appliance flue outlet to the edge of the finished outside wall (dimension X). Add 65mm to dimension X to give you Dimension Y (see fig 9B). Measure dimension Y from the terminal end of the concentric flue pipe and cut off the excess ensuring any burrs are removed. Pass the concentric flue pipe through the previously drilled hole. Fit the flue bend to the boiler flue outlet and insert the concentric flue pipe into the flue bend ensuring the correct seal is made. Using the clamp, gasket, and screws supplied, secure the flue bend to the appliance flue spigot.

NOTE
Fit the internal (white) trim to the flue assembly prior to connecting the flue pipe to the bend.
You must ensure that the entire flue system is properly supported and connected. Seal the flue assembly to the wall using cement or a suitable alternative that will provide satisfactory weatherproofing. The exterior trim can now be fitted.

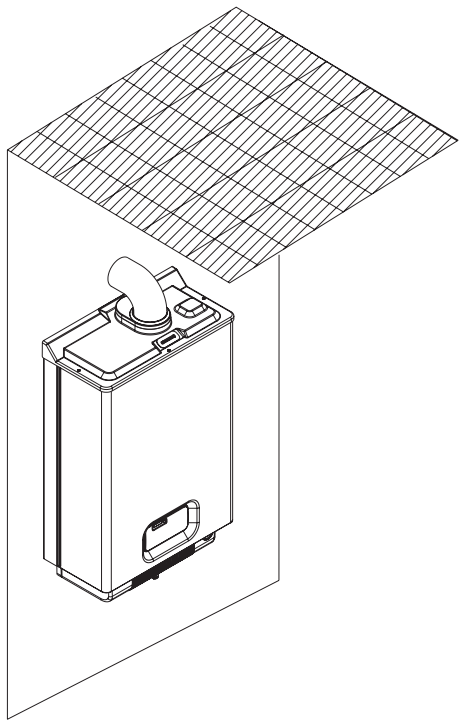
Fig. 9A

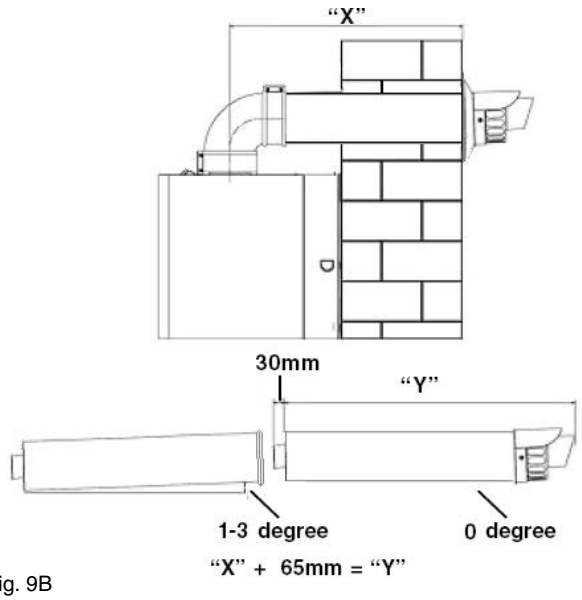

fig. 9B

4.5.1.1 EXTENDING THE FLUE

Connect the bend – supplied with the terminal kit – to the top of the boiler using clamp (supplied) see fig. 9. The additional bends & extensions have push-fit connections, care should be taken to ensure that the correct seal is made when assembling the flue system. Connect the required number of flue extensions or bends (up to the maximum equivalent flue length) to the flue terminal (see fig. 9 & 10). Any flue extensions should have a minimum of 1º; maximum of 3º rise from the boiler to outside, to ensure any condense fluid that forms, is allowed to drain back to the appliance (see fig. 9B&9C) .

NOTE

When cutting an extension to the required length, you must ensure that the excess is cut from the plain end of the extension (see fig. 9 & 10). Remove any burrs, and check that all seals are located properly. You must ensure that the entire flue system is properly supported and connected. Seal the flue assembly to the wall using cement or a suitable alternative that will provide satisfactory weatherproofing. The interior and exterior trim can now be fitted.

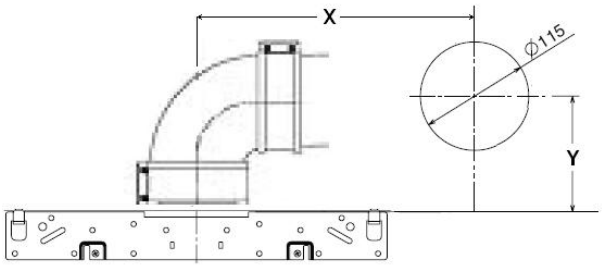

X = Measured distance from flue spigot to hole drilled.	Y = measured hight from bracket to centre of hole drilled.	
	min	max
X = terminal only	114mm	114mm
X = 2m	132mm	166mm
X = 3m	149mm	219mm
X = 4m	166mm	271mm
X = 5m	184mm	324mm
X = 6m	201mm	376mm
X = 7m	219mm	428mm
X = 7.8m	236mm	481mm

fig. 9C

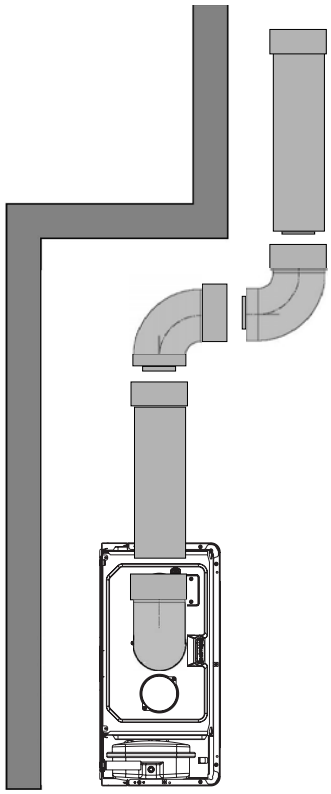
Fig. 10

4.5.2 CONCENTRIC VERTICAL FLUE

The appliance can be used with either the Vokera condensing 60/100mm concentric flue system or the optional 80/125mm concentric flue system.

NOTE

These instructions relate **only** to the Vokera condensing 60/100mm concentric flue system. For specific details on the installation of the 80/125mm concentric flue system please refer to the instructions supplied.

The vertical flue terminal can be connected directly to the appliance flue outlet. Alternatively, an extension or bend can be connected to the appliance flue outlet if desired (see 4.4.2), however if additional bends are fitted, a reduction must be made to the maximum flue length (see table below).

Reduction for bends

Bend	Reduction in maximum flue length for each bend
45º bend	0.5 metre
90º bend	1.0 metre

Vertical flue terminal and accessories

Part No.	Description	Length
530	Vertical flue terminal	1000mm
531	Pitched roof flashing plate	N/A
532	Flat roof flashing plate	N/A
523	90-degree bend	N/A
524	45-degree bends (pair)	N/A
525	500mm extension	500mm
526	1000mm extension	1000mm
527	2000mm extension	2000mm
528	Telescopic extension	350/730mm
529	Wall bracket pack (5)	208mm

Using the dimensions given in fig. 9 as a reference, mark and cut a 115mm hole in the ceiling and/or roof.

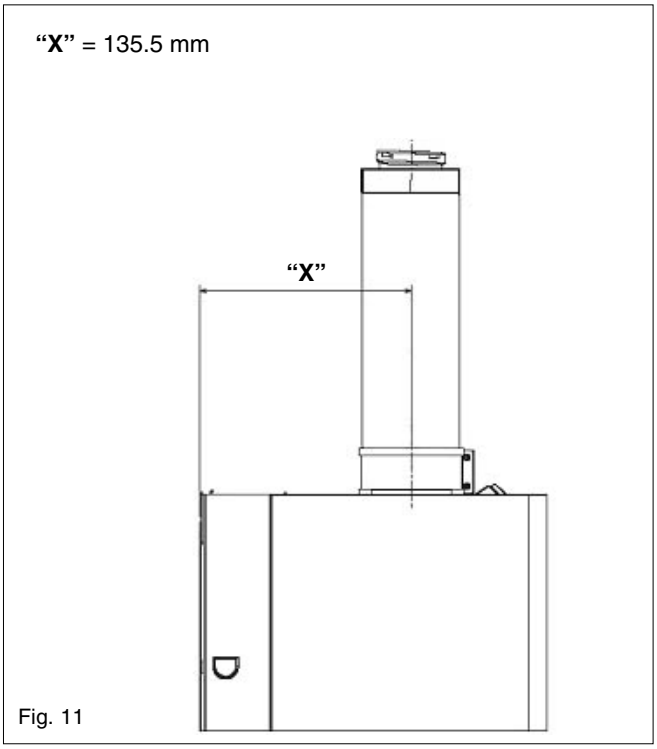

Fig. 11

Fit the appropriate flashing plate to the roof and insert the vertical flue terminal through the flashing plate from the outside, ensuring that the collar on the flue terminal fits over the flashing.
The fixing holes for the wall-mounting bracket/ fixing jig should now be drilled and plugged, an appropriate type and quantity of fixing should be used to ensure that the bracket is mounted securely. Once the bracket has been secured to the wall, mount the appliance onto the bracket.

IMPORTANT
The vertical flue terminal is 1.0 metre in length and cannot be cut; therefore it may be necessary to adjust the height of the appliance to suit or use a suitable extension.
Connect the vertical flue assembly to the boiler flue spigot using the 100mm clip, gasket & screws (supplied), ensuring the correct seal is made. The flue support bracket (supplied with the vertical flue kit) can now be fitted.
If the vertical flue requires extension/s or additional bend/s, connect the required number of flue extensions or bends (up to the maximum equivalent flue length) between the boiler and vertical flue assembly (see fig. 10).
Ensure that any horizontal sections of the flue system have a minimum 1º; maximum 3º fall back to the boiler (1º = 17mm per 1000mm).

NOTE
When cutting an extension to the required length, you must ensure that the excess is cut from the plain end of the extension (see fig. 8). Remove any burrs, and check that any seals are located properly.

You must ensure that the entire flue system is properly supported and connected.

4.5.3 TWIN FLUE SYSTEM

The Vokera twin flue system enables greater flue distances to be achieved (see 4.4.2) than that of a concentric flue system. It can be used for horizontal or vertical applications, however the twin flue system must be converted to the dedicated concentric flue kit for termination. It is essential that the installation of the twin flue system be carried out in strict accordance with these instructions.

GUIDANCE NOTES ON TWIN FLUE INSTALLATION

- The flue must have a have a minimum 1º; maximum 3º (1º = 17mm per 1000mm) fall back to the appliance to allow any condensate that may form in the flue system to drain via the condensate drain. Consideration must also be given to the fact that there is the possibility of a small amount of condensate dripping from the terminal.
- Ensure that the entire flue system is adequately supported, use at least one bracket for each extension.
- The entire flue system must be adequately insulated to maintain heat within the flue system thereby reducing the possibility of condensate production.
- As the exhaust outlet pipe can reach very high temperatures it must be protected to prevent persons touching the hot surface.
- The condensate drain pipe must be connected in accordance with building regulations.

Reduction for bends

Bend	Reduction in maximum flue length for each bend
45º bend	1.0 metre
90º bend	1.0 metre

Twin flue accessories

Part No.	Description	Length
0225805	Horizontal flue terminal	1.0 metre
0225810	Vertical flue terminal	1.0 metre
359	Twin adapter kit	N/A
531	Pitched roof flashing plate	N/A
532	Flat roof flashing plate	N/A
0225815	Condensate drain kit	N/A
0225820	0.25m extension (pair)	250mm
0225825	0.5m extension (pair)	500mm
0225830	1.0m extension (pair)	1000mm
0225835	2.0m extension (pair)	2000mm
0225840	45º bend (pair)	N/A
0225845	90º bend (pair)	N/A
0225850	Twin bracket (5)	N/A
0225855	Single bracket (5)	N/A

MOUNTING THE BOILER

The fixing holes for the wall-mounting bracket should now be drilled and plugged, an appropriate type and quantity of fixing should be used to ensure that the bracket is mounted securely. Once the bracket has been secured to the wall, mount the appliance onto the bracket.

4.5.3.1 INSTALLATION OF TWIN ADAPTOR KIT (fig. 12 & 13)

- Insert the exhaust connection manifold (A) onto the appliance flue outlet.
- Remove the blanking plate (located to the right of the appliance flue outlet) and – using the same screws – install the air inlet plate (B).
- Using the hole in the exhaust connection manifold as a guide, drill a 3mm hole in the appliance flue spigot and secure the exhaust manifold connection to the flue spigot using the screw provided (C).
- Using the two holes in the air inlet plate as a guide, drill a 3mm hole in each and secure the air inlet pipe/bend using the screws provided.

The twin flue pipes extensions and accessories can now be installed by pushing together (the plain end of each extension or bend should be pushed approximately 50mm into the female socket of the previous piece).

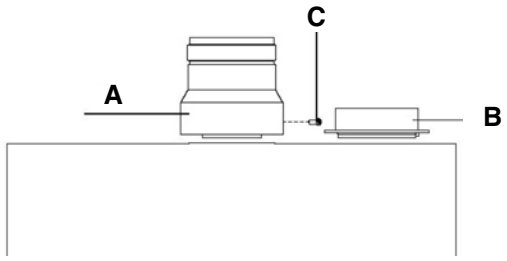

Fig. 12

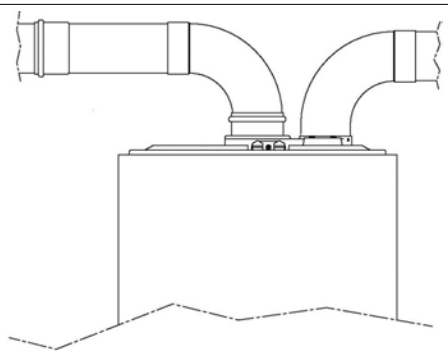
Fig. 13

4.5.3.2 HORIZONTAL TERMINATION (fig. 14)

The twin flue system must be converted to the dedicated concentric flue kit for termination.

- The horizontal terminal is supplied with a built-in converter box and cannot be shortened.
- A 130mm hole is required for the passage of the concentric terminal through the wall.
- The air inlet pipe must always be level with or below, that of the exhaust pipe.

Depending on site conditions it may be preferable to install the terminal assembly prior to fitting the twin flue pipes.

Mark and drill a level 130mm hole for the passage of the horizontal flue terminal. Insert the terminal assembly into the flue hole.

Push-fit the twin flue pipes onto the concentric to twin converter box ensuring that the exhaust pipe connects to the exhaust connection on the concentric to twin converter.

If necessary cut the plain ends (male) of the twin flue pipes to allow connection to the concentric to twin converter.

NOTE

Before cutting twin flue pipes ensure allowances have been made for connection onto the previous piece and onto the concentric to twin converter. The last twin flue pipes must be pushed 50mm onto the male spigots of the concentric to twin converter.

NOTE

Seal the flue terminal assembly to the wall using cement or a suitable alternative that will provide satisfactory weatherproofing. The interior and exterior trim can now be fitted.

4.5.3.3 VERTICAL TERMINATION (fig. 15)

The twin flue system must be converted to the dedicated concentric flue kit for termination.

- The vertical terminal is supplied with a built-in converter box and cannot be shortened.
- A 130mm hole is required for the passage of the concentric terminal through the ceiling and/or roof.

Depending on site conditions it may be preferable to install the terminal assembly prior to fitting the twin flue pipes.

Fit the appropriate flashing plate to the roof and insert the vertical flue terminal through the flashing plate from the outside, ensuring that the collar on the flue terminal fits over the flashing.

Push-fit the twin flue pipes onto the concentric to twin converter ensuring that the exhaust pipe connects to the exhaust connection on the concentric to twin converter.

If necessary cut the plain ends (male) of the twin flue pipes to allow connection to the concentric to twin converter.

NOTE

- Before cutting twin flue pipes ensure allowances have been made for connection onto the previous piece and onto the concentric to twin converter. The last twin flue pipes must be pushed 50mm onto the male spigots of the concentric to twin converter.
- You must ensure that the entire flue system is properly supported and connected.
- Ensure that any horizontal sections of pipe have a 1º fall towards the appliance (17mm per 1000mm).

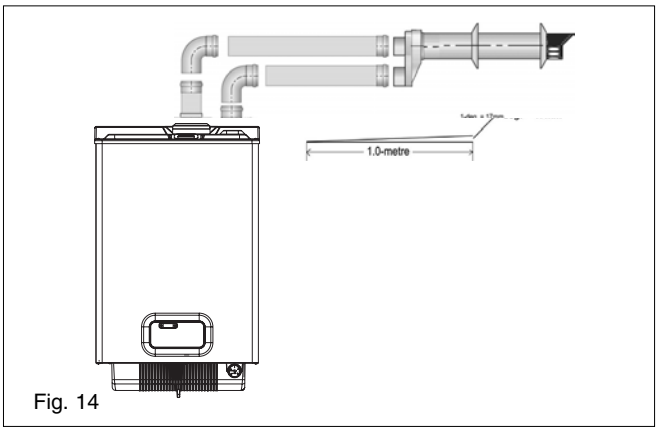

Fig. 14

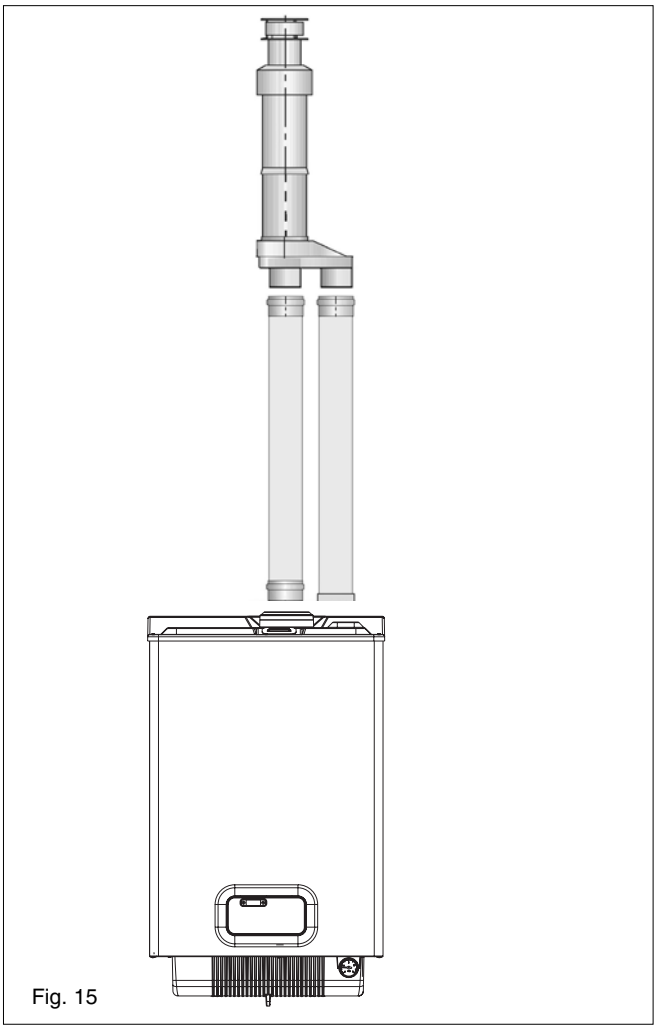
Fig. 15

4.6 CONNECTING THE GAS AND WATER IMPORTANT - REAR SPACER KIT

If you intend to run the pipe-work vertically behind the appliance, it will be necessary to use the rear spacer kit (part code 435). It will also be necessary to adjust the pitch of the fixing jig to compensate for the increase in the depth of the appliance.

The appliance is supplied with a fixing jig that includes service valves (fig. 14). The service valves are of the compression type. The accessories pack contains sealing washers etc., for use with the service valves.

When connecting pipe work to the valves, tighten the compression end first then insert the sealing washers before tightening the valve to the appliance.

NOTE

It will be necessary to hold the valve with one spanner whilst tightening with another.

4.6.1 GAS (fig. 16)

The appliance is supplied with a 15mm service valve, connect a 15mm pipe to the inlet of the valve and tighten both nuts.

NOTE

It will be necessary to calculate the diameter of the gas supply pipe to ensure the appliance has an adequate supply of gas.

4.6.2 FLOW & RETURN (fig. 16)

The appliance is supplied with 22mm service valves for the flow and return connections, connect a 22mm pipe to the inlet of each valve and tighten both nuts.

NOTE

Depending on system requirements, it may necessary to increase the size of the flow & return pipe work after the service valve connections.

4.6.3 COLD WATER INLET (fig. 16)

The appliance is supplied with a 15mm combined stopcock and double check-valve, connect a 15mm pipe to the inlet of the stopcock and tighten both nuts.

4.6.4 HOT WATER OUTLET (fig. 16)

The appliance is supplied with a 15mm outlet connection, connect a 15mm pipe to the outlet connection and tighten both nuts.

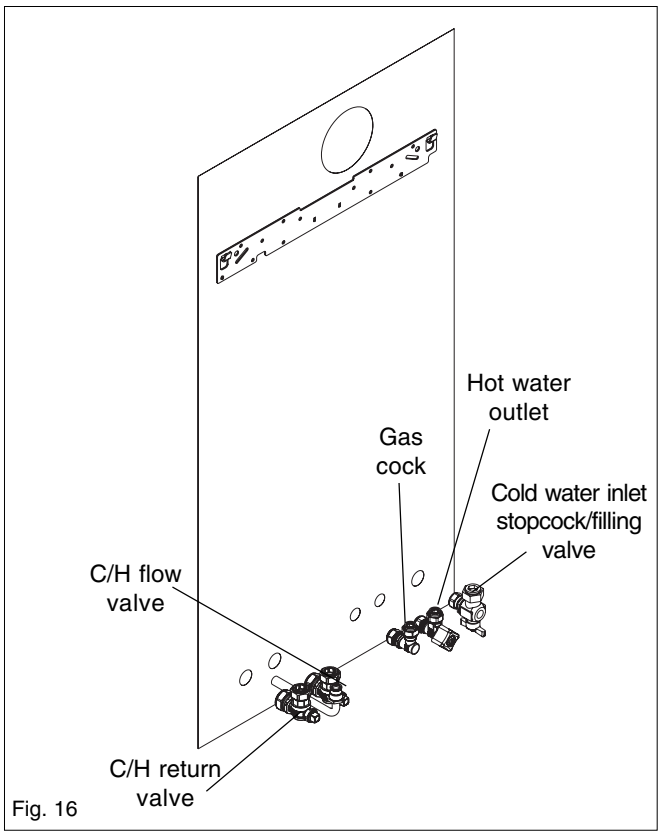

Fig. 16

4.6.5 SAFETY VALVE (fig. 16)

Connect the safety valve connection pipe to the safety valve outlet. Connect a discharge pipe to the other end of the safety valve connection pipe and tighten. The discharge pipe must have a continuous fall away from the appliance to outside and allow any water to drain away thereby eliminating the possibility of freezing. The discharge pipe must terminate in a position where any water – possibly boiling – discharges safely without causing damage or injury, but is still visible.

4.6.5 CONDENSE PIPE

During normal operation the boiler produces condense which is collected in a trap located in the lower part of the boiler. A flexible pipe (condense outlet pipe) is connected to the outlet of the trap. The flexible pipe must be connected to a plastic waste pipe only. The plastic waste pipe must have a minimum of a 3º fall towards the drain. Any external run of pipe should be insulated to prevent the risk of freezing.

CONNECTING THE CONDENSATE OUTLET

Gently pull the condense outlet pipe down from its location inside the boiler until it protrudes from the underside of the boiler. Connect a suitable plastic (not copper) pipe (no less than 20mm diameter) to the outlet pipe and ensure it discharges in accordance with building regulations or other rules in force (see fig. 15A for examples).

4.7 ELECTRICAL CONNECTIONS

The electrical supply must be as specified in section 3/3A. A qualified electrician should connect the electrical supply to the appliance. If controls – external to the appliance – are required, a competent person must undertake the design of any external electrical circuits, please refer to section 8 for detailed instructions. ANY EXTERNAL CONTROL OR WIRING MUST BE SERVED FROM THE SAME ISOLATOR AS THAT OF THE APPLIANCE. The supply cable from the isolator to the appliance must be 3-core flexible sized 0.75mm to BS 6500 or equivalent. Wiring to the appliance must be rated for operation in contact with surfaces up to 90ºC.

4.7.1 CASING REMOVAL (fig. 17)

To gain internal access to the appliance you must first remove the casing, proceed as outlined below:

- remove the 4 screws (B) located on the underside of the casing.
- lift the casing upward to disengage it from the top locating hooks and then remove.
- store the casing and screws (B) safely until required. Re-fit in the reverse order.

4.7.2 APPLIANCE TERMINAL BLOCK

The appliance terminal block is located on the rear of the control fascia. Remove the casing as described in 4.7.1. Gently pull the control panel forwards and down. Locate the terminal block cover (fig. 18).

NOTE

The appliance comes with a factory fitted link ('TA') to allow basic operation of the boiler via the mode selector switch. If it is anticipated that external controls will be required please refer to the wiring diagrams in section 8 for more detailed information.

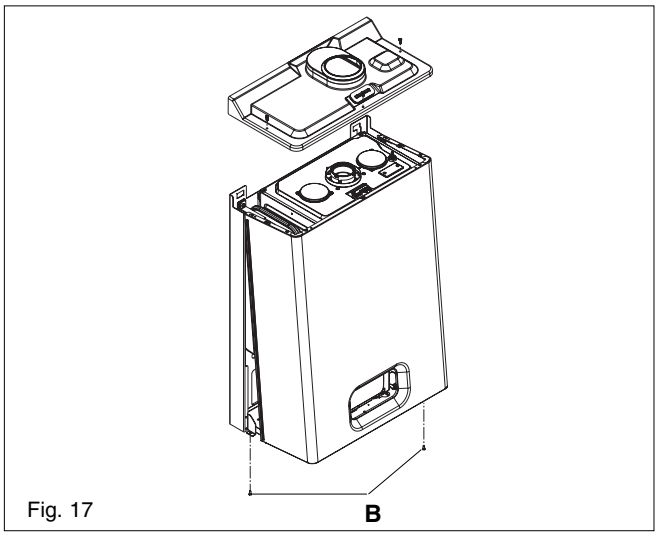

Fig. 17

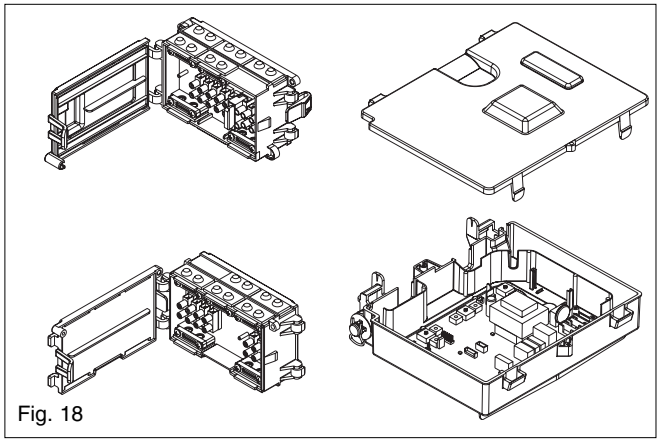

Fig. 18

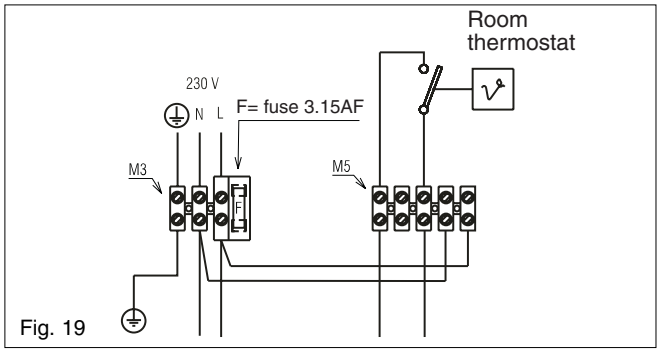

Fig. 19

4.7.3 CONNECTING THE MAINS (230V) INPUT (fig. 19)

Unhook and remove the terminal block cover (230V). Pass the cable through the cable anchorage point. Connect the supply cable wires (LIVE, NEUTRAL, & EARTH) to their corresponding terminals (L, N, & E) on the appliance – high voltage – terminal block. When connecting the EARTH wire, ensure that it's left slightly longer that the others, this will prevent strain on the EARTH wire should the cable become taut. Do not remove the link wire unless additional external controls are to be fitted (see section 8). The securing screw on the cable anchorage should now be tightened. This must be done before the terminal block cover is re-fitted in its position.

NOTE

It is the installer's responsibility to ensure that the appliance is properly Earthed. Vokera Ltd. cannot be held responsible for any damages or injuries caused as a result of incorrect Earth wiring.

5.1 GAS SUPPLY INSTALLATION

Inspect the entire installation including the gas meter, test for tightness and purge. Refer to BS 6891 (I.S. 813 in ROI) for specific instruction.

5.2 THE HEATING SYSTEM

The appliance contains components that may become damaged or rendered inoperable by oils and/or debris that are residual from the installation of the system, consequently it is essential that the system be flushed in accordance with the following instructions.

5.3 INITIAL FILLING OF THE SYSTEM

Ensure both flow and return service valves are open, remove appliance casing as described in 4.7.1, identify the automatic air release valves (AAV) and loosen the dust cap/s by turning the cap anti-clockwise one full turn.

Ensure all manual air release valves located on the heating system are closed. Connect the filling loop as shown in fig. 5, slowly proceed to fill the system by firstly opening the inlet valve connected to the flow pipe, and then turning the lever on the fill valve, to the open position. As water enters the system the pressure gauge will begin to rise. Once the gauge has reached 1 BAR close both valves and begin venting all manual air release valves, starting at the lowest first. It may be necessary to go back and top-up the pressure until the entire system has been filled. Inspect the system for water tightness, rectifying any leaks.

5.3.1 MANUAL AIR RELEASE (fig. 20)

When the boiler has been filled for the first time or the system has been drained and refilled, it will be necessary to release any air that may have become trapped within the appliance heat exchanger. Slacken the bleed screw until water is released and then close.

IMPORTANT, THERE ARE NO OTHER MANUAL AIR RELEASE VALVES LOCATED ON THE APPLIANCE.

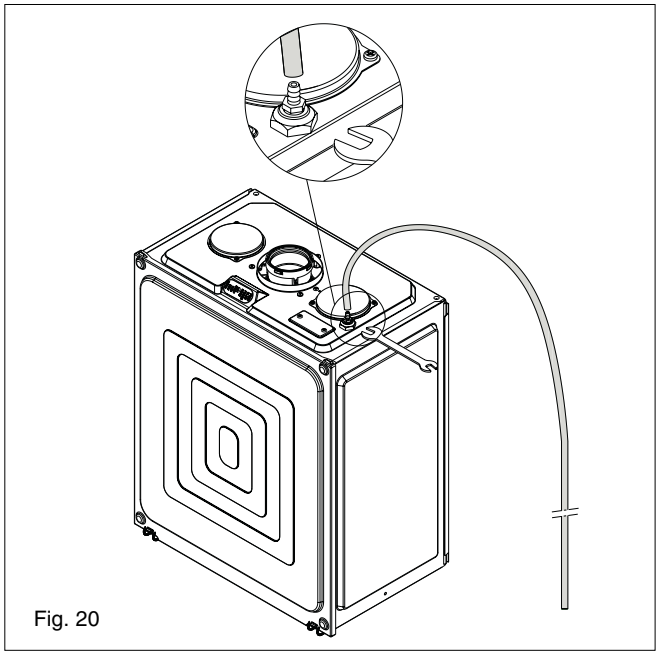

Fig. 20

5.4 INITIAL FLUSHING OF THE SYSTEM

The whole of the heating system must be flushed both cold and hot as detailed in 5.8. Open all radiator or heating valves and the appliance flow & return service valve. Drain the boiler and system from the lowest points. Open the drain valve full bore to remove any installation debris from the boiler prior to lighting. Refill the boiler and heating system as described in 5.3.

5.5 PRE-OPERATION CHECKS

Before attempting the initial lighting of the appliance, the following checks must be carried out:

- ensure all gas service valves from the meter to the appliance are open and the supply pipe has been properly purged;
- ensure the proper electrical checks have been carried out, (see 7.8) particularly continuity, polarity and resistance to earth;
- ensure the 3 AMP fuse – supplied with the appliance – has been fitted;
- ensure the system has been filled, vented and the pressure set to 1 BAR;
- ensure the flue system has been fitted properly and in accordance with the instructions;
- ensure all appliance service valves are open.

5.6 INITIAL LIGHTING

Ensure the electrical supply to the appliance is switched on. Ensure any external controls are switched to an 'ON' position and are calling for heat.

Move the selector switch to the ON position, the appliance will now operate as described in 1.2. Should the appliance fail to ignite, refer to 5.6 and/or section 7 (mode of operation, parameter setting & faultfinding).

5.7 CHECKING GAS PRESSURE AND COMBUSTION ANALYSIS

The appliance is factory set and requires no additional adjustment once installed. However to satisfy the requirements of GSIUR 26/9 (I.S. 813 ROI), it will be necessary to gas rate the appliance using the gas meter that serves the appliance.

If the installation does not include a gas meter (for example LPG) and there are no means by which to calculate the gas rate, then a combustion analysis test must be carried out in accordance with BS 7967 (UK) to ensure the appliance is left working safely and correctly.

Additionally, if the gas valve has been adjusted, replaced, or the appliance has been converted for use with another gas type, then it becomes necessary to carry out a combustion analysis/check to ensure that correct combustion is occurring.

If there are no means to gas rate the appliance and/or carry out a combustion analysis check, then it will not be possible to complete the commissioning procedure.

Details on how to carry out the combustion analysis can be found in section 7.

IMPORTANT
It's imperative that a sufficient dynamic – gas – pressure is maintained at all times. Should the dynamic gas pressure fall below an acceptable level, the appliance may malfunction or sustain damage.

5.8 FINAL FLUSHING OF THE HEATING SYSTEM
The system shall be flushed in accordance with BS 7593 (I.S. 813 ROI). Should a cleanser be used, it must be suitable for Aluminium heat exchangers. It shall be from a reputable manufacturer and shall be administered in strict accordance with the manufacturers' instructions and the DWTA code of practice.
NOTE
Chemicals used to cleanse the system and/or inhibit corrosion must be pH neutral, i.e. they should ensure that the level of the pH in the system water remains neutral. Premature failure of certain components can occur if the level of pH in the system water is out-with normal levels.

5.8.1 INHIBITORS
See Section 3 "General Requirements".

5.9 SETTING THE FLOW OUTLET TEMPERATURE
The flow outlet temperature can be adjusted between 40 °C - 80 °C for standard CH system and between 20 °C - 45 °C for under-floor systems by using the Heating thermostat knob (see fig.1).

5.9.1 SETTING THE DHW OUTLET TEMPERATURE
The DHW outlet temperature can be adjusted between 35 °C - 60 °C via the DHW thermostat knob (see fig.1).

5.10 SETTING THE SYSTEM DESIGN PRESSURE
The design pressure should be a minimum of 0.5 BAR and a maximum of 1.5 BAR. The actual reading should ideally be 1 BAR plus the equivalent height in metres (0.1 BAR = 1 metre) to the highest point in the system above the base of the appliance (up to the maximum of 1.5 BAR total).
N.B. The safety valve is set to lift at 3 BAR/30 metres/45 psig. To lower the system pressure to the required value, drain off some water from the appliance drain valve until the required figure registers on the pressure gauge (see fig. 1).

5.11 REGULATING THE CENTRAL HEATING SYSTEM
Fully open all radiator and circuit valves and run the appliance for both heating and hot water until heated water is circulating. If conditions are warm remove any thermostatic heads. Adjust radiator return valves and any branch circuit return valves until the individual return temperatures are correct and are approximately equal.

5.11.1 REGULATING THE DHW FLOW-RATE
The appliance is fitted with a flow rate restrictor that limits the maximum flow rate that can be drawn through the appliance.
The restrictor eliminates the need to manually adjust the DHW flow rate. However if it is felt necessary to further increase or decrease the available flow rate, spare restrictors are included in the accessory pack.
The spare flow rate restrictors can be fitted to either increase or decrease the maximum flow rate. The tables overleaf denote the size of restrictor fitted and the spare restrictors supplied in the accessory pack. Each restrictor is colour-coded to enable identification.

5.11.2 CHANGING THE FLOW-RATE RESTRICTOR
Refer to 6.27 for detailed instruction on changing the flow restrictor.

Unica 32BHE

11-litres	12-litres	13-litres
(Beige)	(Red)	(Olive)
Spare	Fitted	Spare

5.12 FINAL CHECKS
- ENSURE ALL TEST NIPPLES ON THE APPLIANCE GAS VALVE ARE TIGHT AND CHECKED FOR TIGHTNESS.
- ENSURE THE APPLIANCE FLUE SYSTEM IS FITTED CORRECTLY AND IS PROPERLY SECURED.
- ENSURE ALL PIPE WORK IS RE-CHECKED FOR TIGHTNESS.
- RE-FIT APPLIANCE CASING.
- COMPLETE BENCHMARK CHECKLIST.

FOR UK ONLY
Complete details of the boiler, controls, installation and commissioning in the Benchmark checklist at the back of this book. It is important that the Benchmark checklist is correctly completed and handed to the user. Failure to install and commission the appliance to the manufacturers instructions may invalidate the warranty.

5.13 INSTRUCTING THE USER
Hand over all documentation supplied with this appliance – including these instructions – and explain the importance of keeping them in a safe place.
Explain to the user how to isolate the appliance from the gas, water and electricity supplies and the locations of all drain points. Show the user how to operate the appliance and any associated controls correctly.
Show the user the location of the filling valve and how to top-up the system pressure correctly and show the location of all manual air release points.
Explain to the user how to turn off the appliance for both long and short periods and advise on the necessary precautions to prevent frost damage.
Explain to the user that for continued safe and efficient operation, the appliance must be serviced annually by a competent person.

IMPORTANT
To validate the appliance warranty, it's necessary to register the appliance details with us. The warranty can be registered in several ways:
- by completing the warranty registration card and posting to us using the envelope supplied
- online at: vokera.co.uk
- for UK residents by calling: 0844 607 0281
- for ROI residents by calling: 1850 221121.

6.1 GENERAL

To ensure the continued safe and efficient operation of the appliance, it is recommended that it is checked and serviced at regular intervals. To ensure correct and safe operation of the appliance, it is essential that any worn or failed component be replaced only with a **genuine Vokera spare part**. It should be remembered that although certain generic components may look similar, they will be specific to an individual appliance or product range. Use of non-genuine Vokera spare parts could invalidate your warranty and may pose a potential safety hazard. The frequency of servicing will depend upon the particular installation conditions, but in general, once per year should be sufficient. It is the law that any servicing work is carried out by competent person such as a Vokera engineer, an approved service agent, British Gas, CORGI registered personnel or other suitably qualified personnel. The following instructions apply to the appliance and its controls, but it should be remembered that the central heating and the domestic hot water systems would also require attention from time to time.

6.2 ROUTINE ANNUAL SERVICING

- Check the operation of the appliance and ensure it functions as described in section 7.
- Compare the performance of the appliance with its design specification. The cause of any noticeable deterioration should be identified and rectified without delay.
- Thoroughly inspect the appliance for signs of damage or deterioration especially the flue system and the electrical apparatus.
- Check and adjust – if necessary – all burner pressure settings (see 7.4).
- Check and adjust – if necessary – the system design pressure (see 5.10).
- Carry out an analysis of the flue gases (see 7.5), and visually check the condition of the entire flue assembly.
- Compare the results with the appliance design specification. Any deterioration in performance must be identified and rectified without delay.
- Check that the burner and main heat exchanger are clean and free from any debris or obstruction.
- Check and clean – if necessary – the condense trap to ensure correct operation.

6.3 REPLACEMENT OF COMPONENTS

Although it is anticipated that this appliance will give years of reliable, trouble free service, the life span of components will be determined by factors such as operating conditions and usage. Should the appliance develop a fault, the fault finding section will assist in determining which component is malfunctioning.

6.4 COMPONENT REMOVAL PROCEDURE

To remove a component, access to the interior of the appliance is essential. Isolate the appliance from the electrical supply and remove the fuse. And when necessary, close all service valves on the appliance, remove the appliance casing as described in section 4.7.1 and drain the water content from the appliance via the drain valve. Ensure some water absorbent cloths are available to catch any residual water that may drip from the appliance or removed component. Undertake a complete commissioning check as detailed in section 5, after replacing any component. **ALWAYS TEST FOR GAS TIGHTNESS IF ANY GAS CARRYING COMPONENTS HAVE BEEN REMOVED OR DISTURBED.**

6.4.1 AIR BOX FRONT COVER REMOVAL (fig. 21)

Locate the two clips and remove air box front cover. If it's necessary to remove the air box side cover, locate and remove the 4 securing screws.

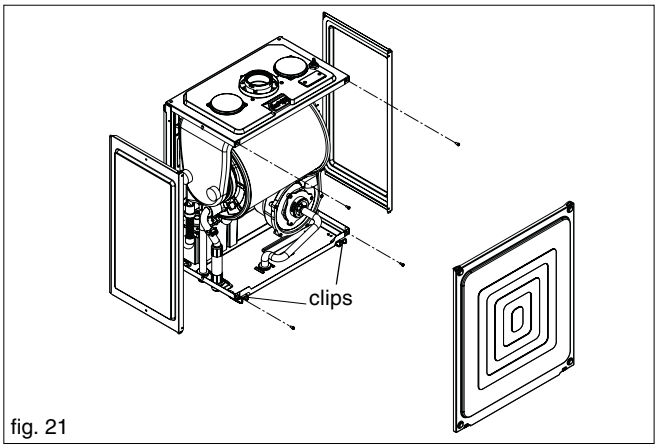

fig. 21

6.5 PUMP ASSEMBLY (fig. 22)

Carry out component removal procedure as described in 6.4. Disconnect the flow pipe **(B)** from the combustion chamber connection (only 32/36 HE), slacken the pipe at the hydraulic assembly and swing/rotate clear of the pump assembly. Disconnect and remove the pump outlet pipe **(C)** from the pump assembly/combustion chamber connection.

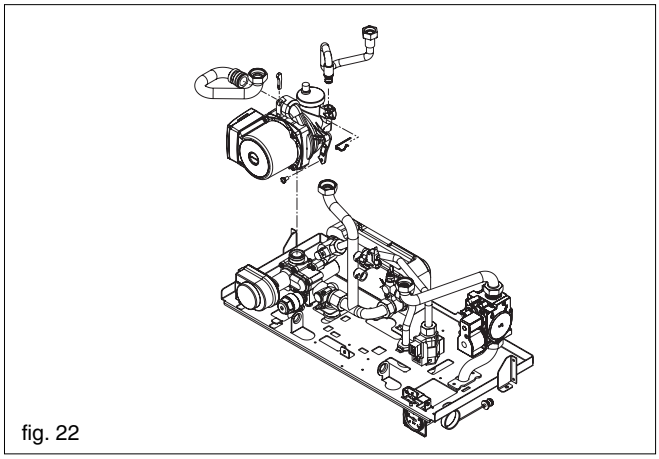

fig. 22

Remove the expansion pipe locking pin **(D)** from the top of the pump assembly and withdraw the flexible pipe. Locate and remove the pressure gauge securing pin ($\mathbf{D_1}$) and disconnect the pressure gauge from the pump assembly. Disconnect the electrical wiring from the pump's electrical connection point **(E)**. Locate and remove the 2 securing screws **(A)** at the rear of the pump assembly. Remove locking pin **(F)** from pump base and lift pump assembly clear of the hydraulic manifold. The pump assembly can now be removed from the appliance. Replace carefully in the reverse order.

6.6 SAFETY VALVE (fig. 23)

Carry out component removal procedure as described in 6.4. Disconnect the outlet pipe **(A)** from the safety valve, remove safety valve locking pin **(B)** from the hydraulic manifold. Replace in the reverse order.

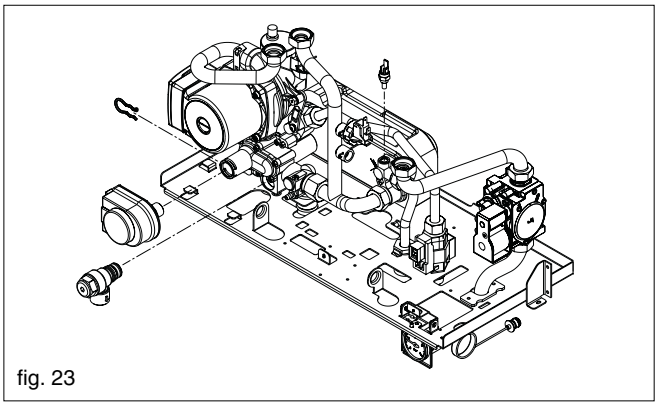

fig. 23

6.7 LOWER AUTOMATIC AIR RELEASE VALVE (fig. 22)

Carry out component removal procedure as described in 6.4. Remove the expansion pipe locking pin **(D)** from the pump assembly and remove the expansion pipe. Locate and remove the AAV locking pin **(G)** from the pump assembly and remove the AAV assembly **(H)**. Replace in the reverse order.

6.7.1 TOP AUTOMATIC AIR RELEASE VALVE (fig. 24)

Carry out component removal procedure as described in 6.4. Remove the drain pipe **(A)**. Unscrew the top AAV **(B)**. Replace in the reverse order. Loctite or similar should be used as a thread sealant for the AAV.

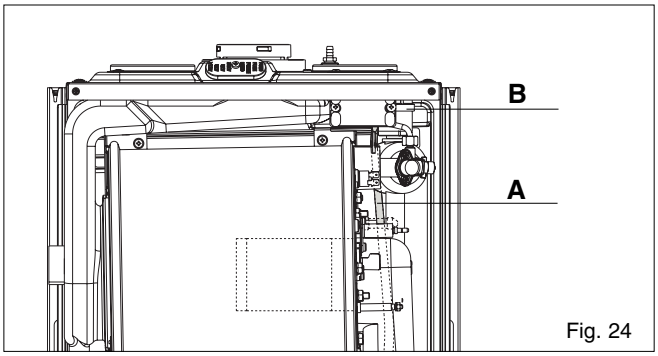

Fig. 24

6.8 WATER PRESSURE SWITCH (fig. 23)

Carry out component removal procedure as described in 6.4. Locate and remove the locking pin **(C)** from the water pressure switch. Remove the wiring. Carefully withdraw the switch. Replace in the reverse order.

6.9 PRIMARY THERMISTOR (fig. 1)

Carry out component removal procedure as described in 6.4. Unclip and remove the air chamber front cover. Unclip the primary thermistor from the flow outlet pipe. Disconnect thermistor electrical plug. Replace in the reverse order.

6.10 RETURN THERMISTOR (fig. 1)

Carry out component removal procedure as described in 6.4. Unclip and remove the air chamber front cover. Unclip the return thermistor from the return inlet pipe. Disconnect thermistor electrical plug. Replace in the reverse order.

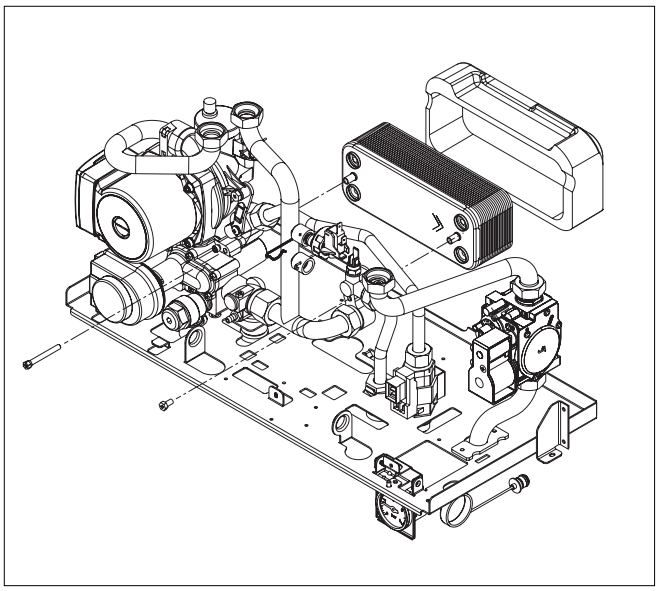

6.11 PRINTED CIRCUIT BOARD (fig. 25)

Carry out component removal procedure as described in 6.4. Pull the control fascia forward and lower it. Push the clips **(A)** which secure the PCB cover, remove cover, after carefully taking note of all wiring connections and jumper tag configuration.

Disconnect all wiring from the PCB, locate and remove the PCB securing screws, remove the required PCB. Replace in the reverse order ensuring that the position of the 3 control knobs are correctly aligned with the respective potentiometers on the PCB.

Ensure that the correct jumper tag configuration has been respected. It will be necessary to check the functioning of the PCB is set for the correct boiler type/application.

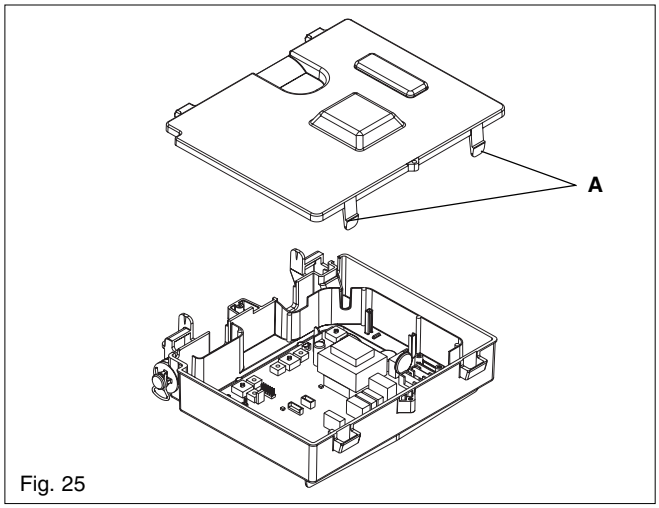

Fig. 25

6.12 GAS VALVE (fig. 26)

Carry out component removal procedure as described in 6.4. The gas valve must be changed as complete unit. Disconnect the electrical plug and leads from the gas valve, slacken and unscrew gas valve inlet and outlet connections. **Please note,** the sealing washers **(B)** must be discarded and replaced with new sealing washers. Disconnect the compensation pipe **(C)**. Locate and remove gas valve retaining screws **(D)** on the underside of the boiler if required, the gas valve can now be removed. Replace in the reverse order. Check and adjust burner pressure settings.

WARNING, A GAS TIGHTNESS CHECK MUST BE CARRIED OUT.

6.12.1 INJECTOR (fig. 26)

Carry out component removal procedure as described in 6.4. Unscrew and remove gas pipe connections **(A & E)**. Locate and remove the injector **(F)** inside the pipe. Replace in the reverse order. Check and adjust burner pressure settings.

WARNING, A GAS TIGHTNESS CHECK MUST BE CARRIED OUT.

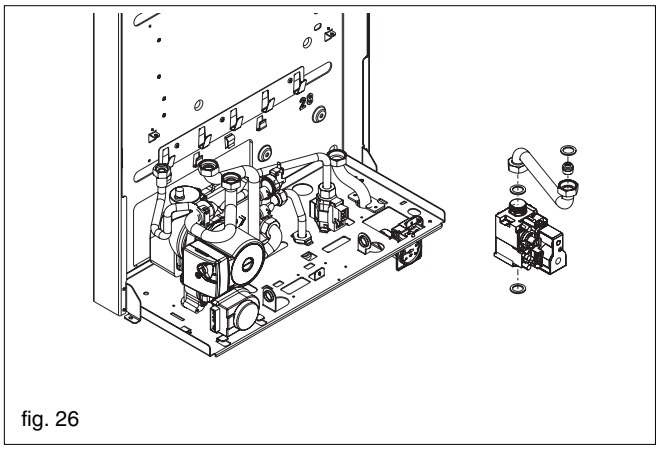

fig. 26

6.13 ELECTRODES & CONDENSE SENSOR (fig. 27)

Carry out component removal procedure as described in 6.4. Unclip and remove the air chamber front and RH side covers. Disconnect the electrode leads and ancillary wiring from their respective connectors. Remove the retaining screws **(A)** for electrode and remove. Remove the retaining nut **(C)** for condense sensor **(D)** and remove.

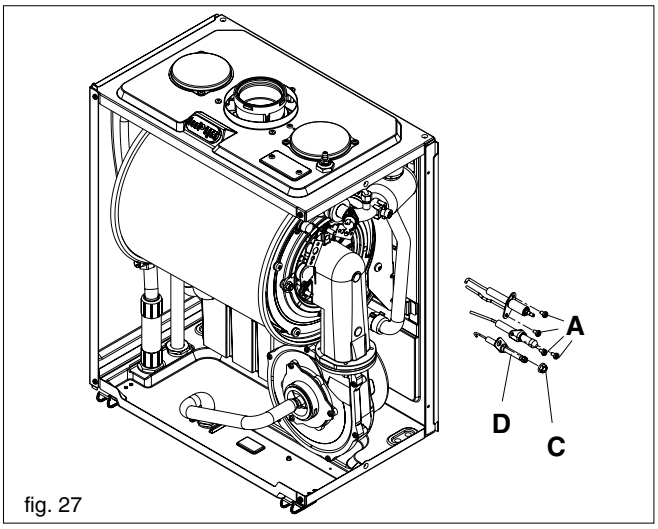

fig. 27

6.14 FLUE FAN & MIXER (fig. 28)

Carry out component removal procedure as described in 6.4. Unclip and remove the air chamber front and the RH side covers. Slacken the gas pipe **(A)** at the air box connection and swing/rotate away from the fan assembly. Locate and remove the sense electrode. To remove the mixer **(B)** locate and remove the three screws **(C)**. To remove the fan **(D)**, disconnect the electrical connections attached to the fan, locate and remove the four screws **(E)**. Gently ease the fan from its location. Replace in the reverse order. Ensure all seals are in good condition, taking care to ensure they are replaced correctly.

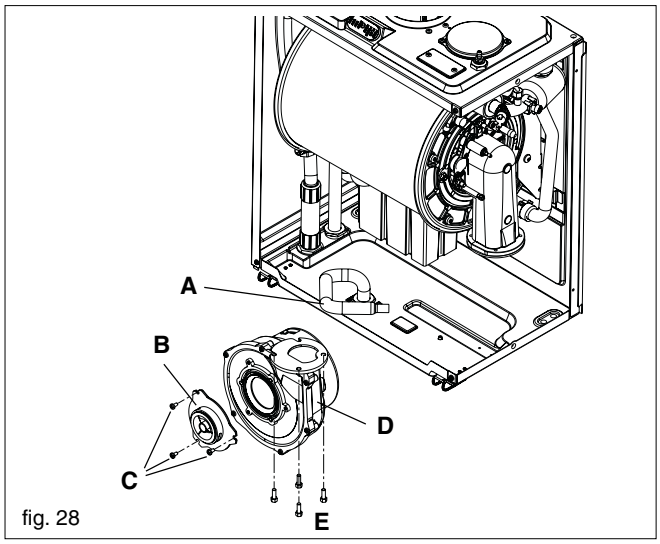

fig. 28

6.15 BURNER (fig. 30)

Carry out component removal procedure as described in 6.4. Unclip and remove the air chamber front and the RH side covers. Slacken the gas pipe **(A)** at the air box connection and swing/rotate of the fan assembly. Locate and remove the 3 internal nuts **(B)** which secure the fan assembly in position **(C)** to the heat exchanger **(D)**. Disconnect the electrode leads and ancillary wiring from their respective connectors. Remove the retaining screws **(A, fig. 29)** for sensing electrode and remove. Remove the retaining nut **(C, fig. 29)** for condense sensor **(D, fig. 29)** and remove. Gently ease the fan assembly out of its location. Once the assembly has been removed, the burner **(E)** can be withdrawn from the heat engine. Ensure the seal **(F)** is in good condition, taking care to ensure it is replaced correctly. Replace in the reverse order.

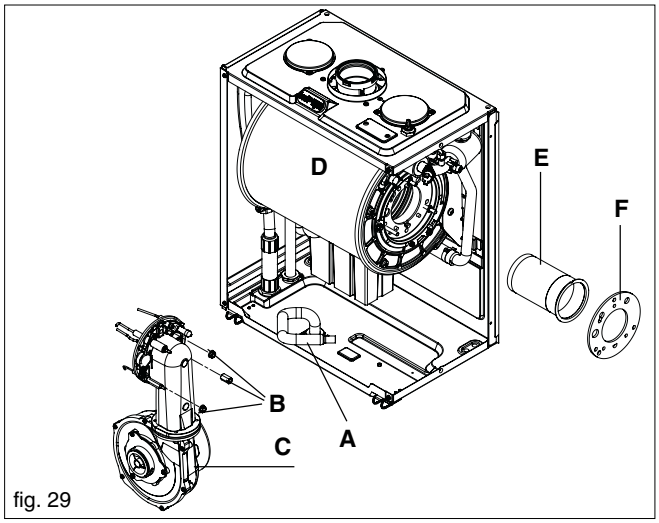

fig. 29

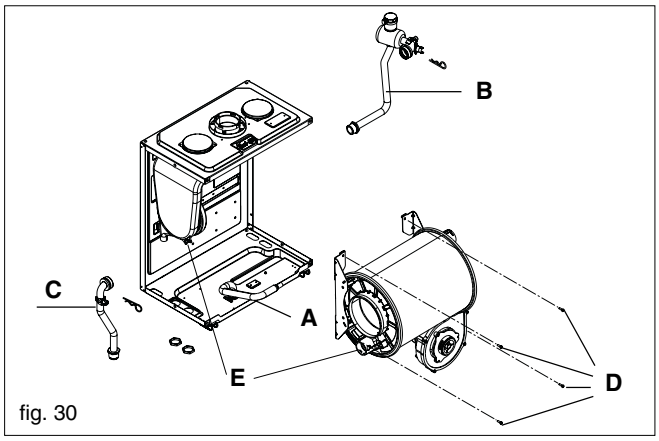

fig. 30

6.16 MAIN HEAT EXCHANGER (fig. 30 & 31)

Carry out component removal procedure as described in 6.4. Unclip and remove the three air chamber covers (front, LH, RH sides). Disconnect all the wiring connections. **Fig. 29:** Slacken the gas pipe **(A)** at the air box connection and swing/rotate of the fan assembly. Disconnect the flow **(B)**, return **(C)** and condense connections on the heat exchanger. Locate and remove the 4-screws that secure the heat exchanger to the combustion chamber **(D)**. Move the heat exchanger to the right and disconnect it from the flue collector **(E)**. The heat exchanger can now be lifted up and withdrawn from the appliance.

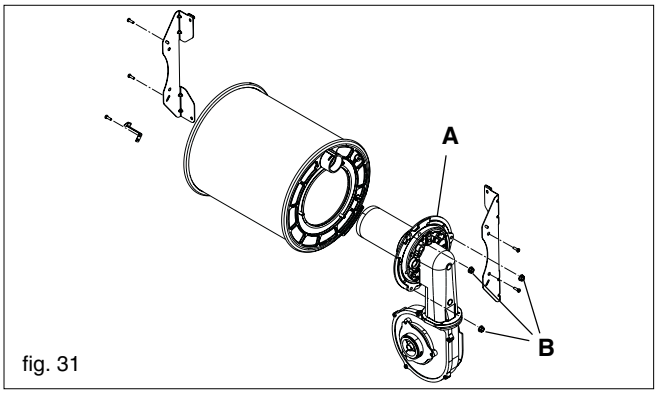

fig. 31

Fig. 31: To remove the fan burner assembly **(A)** locate and remove the 3 external nuts **(B)**. Replace in the reverse order. Ensure all seals are in good condition, taking care to ensure they are replaced correctly.

6.17 AUTOMATIC BY-PASS & DHW NON-RETURN VALVE (fig. 32)

Carry out component removal procedure as described in 6.4.

Remove the locking pin **(A)** that secures the cover **(B)** to the hydraulic manifold. Using a hooked piece of wire, carefully withdraw the by-pass cartridge **(C)** and/or DHW non-return cartridge **(D)**. Ensure all seals are in good condition, taking care to ensure they are replaced correctly. Replace in the reverse order ensuring the cartridge is facing the correct way.

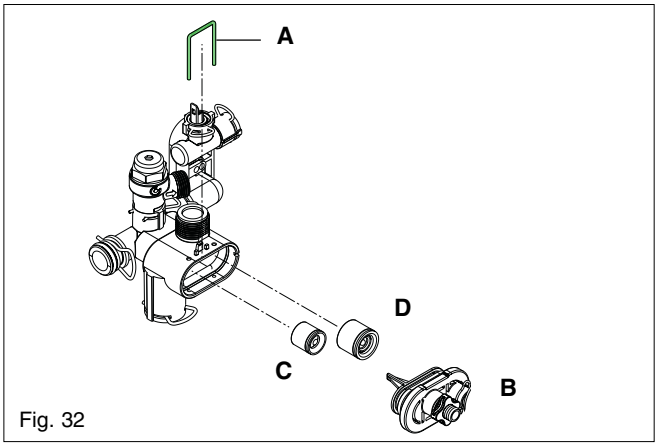

Fig. 32

6.18 EXPANSION VESSEL (fig. 1)

Should the removal and replacement of the expansion vessel be deemed impractical, an external expansion vessel may be fitted to the return pipe as close to the appliance as possible.

6.18.1 EXPANSION VESSEL REMOVAL (with sufficient clearance above, fig. 33)

Carry out component removal procedure as described in 6.4.

Disconnect the expansion vessel from the flexible expansion pipe. Locate and remove the screws **(A)** that secure the vessel top holding plate.

The expansion vessel can now be removed. Replace in the reverse order. Ensure all seals are in good condition, taking care to ensure they are replaced correctly.

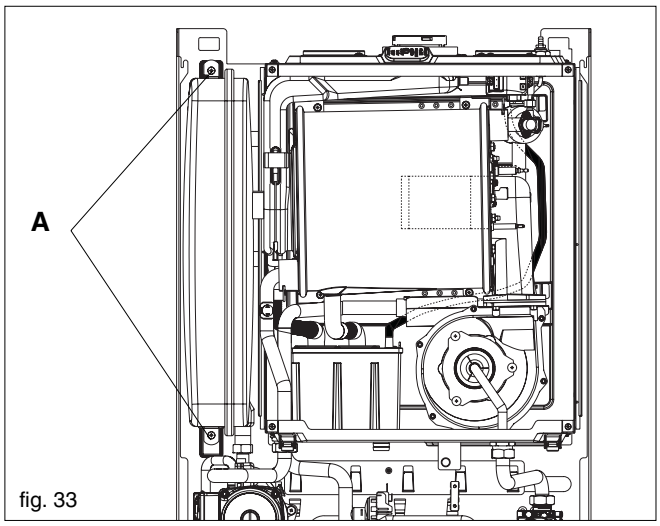

fig. 33

6.19 CONDENSE TRAP REMOVAL (fig. 34)

Carry out component removal procedure as described in 6.4. Disconnect the 2 upper rubbers condense pipe **(A)**. Remove the pin **(B)** that secures the trap to the air box plate. Disconnect the lower rubber condense pipe **(C)** from the condense trap. Carefully remove the condense trap. Replace in the reverse order.

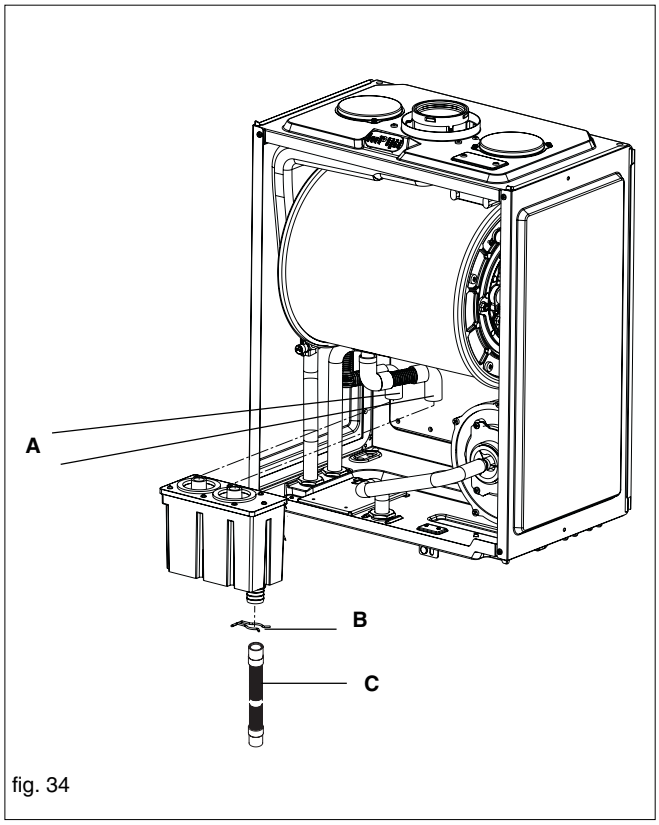

fig. 34

6.20 FLUE COLLECTOR REMOVAL (fig. 35)

Carry out component removal procedure as described in 6.4. Unclip and remove the air chamber front and left side covers. Locate and remove the screw **(A)** that secures the flue gas analysis test point cover **(B)**. Remove the clip and the fumes thermostat. Gently pull down and to the left and ease the flue collector from its location. Replace in the reverse order.

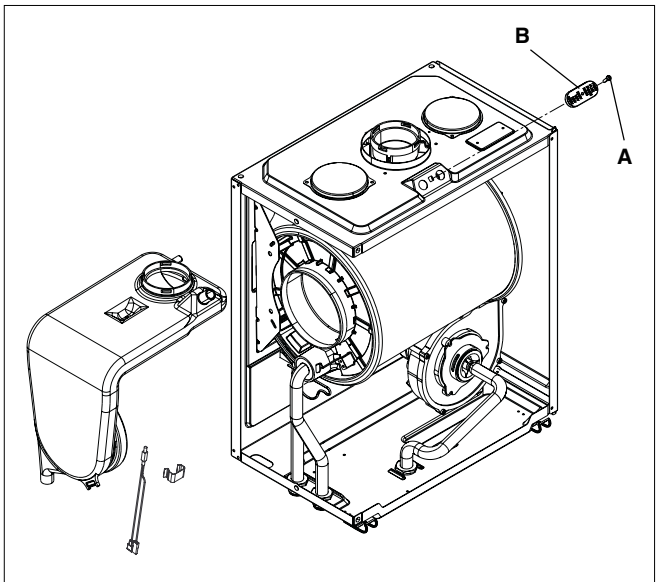

fig. 35

6.20.1 DHW FLOW RESTRICTOR (fig. 35A)

Carry out the component removal procedure as described in 6.4.

Disconnect the cold water inlet pipe at the DHW flow switch **(A)**. Using a small screwdriver, gently ease the flow restrictor **(B)** from its seating. Replace in the reverse order. Ensure all seals are in good condition, taking care to ensure they are replaced correctly.

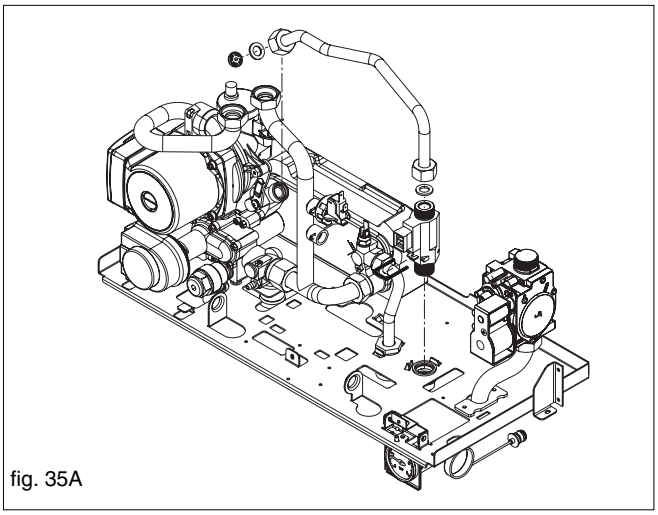
fig. 35A

6.20.2 DHW FLOW SWITCH (fig. 35A)

Carry out component removal procedure as described in 6.4.

Remove the locking pin **(C)**. Disconnect and remove the cold water inlet pipe from the DHW flow switch & DHW heat exchanger. Disconnect the wiring to the DHW flow switch. Slacken and unscrew the inlet connection **(B, fig. 14)**. Unscrew the nut **(D)**. Lift the DHW flow switch housing from its seating. If necessary remove the locking pin **(E)** from the DHW flow switch, taking care not to lose the float contained within the housing.

Replace in the reverse order ensuring that the housing is firmly inserted onto its seating. Ensure all seals are in good condition, taking care to ensure they are replaced correctly.

6.20.3 VALVE ACTUATOR (fig. 35B)

Carry out component removal procedure as described in 6.4.

Remove the locking pin **(F)** that secures the actuator **(G)** to the heating manifold. Disconnect the electrical plug from the actuator. Replace in the reverse order.

6.20.4 DHW THERMISTOR (fig. 35B)

Carry out component removal procedure as described in 6.4.

Locate and remove the thermistor locking pin **(H)**. Gently ease the thermistor assembly **(I)** from the hydraulic manifold. Replace in the reverse order.

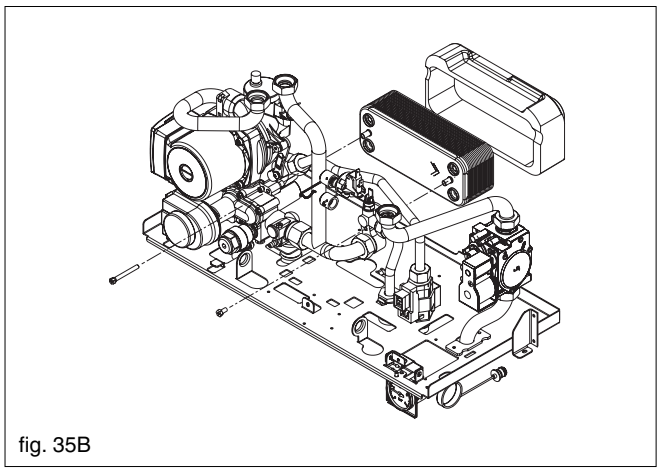
fig. 35B

6.20.5 DIVERTOR VALVE ASSEMBLY (fig. 35C)

Carry out component removal procedure as described in 6.4. Remove the valve actuator as described in 6.20. Locate and remove the locking pin **(A)** that secures the valve housing cover to the hydraulic manifold. Gently prise the valve assembly from the manifold. Replace in the reverse order ensuring that the seating assembly is inserted properly. Ensure all seals are in good condition, taking care to ensure they are replaced correctly.

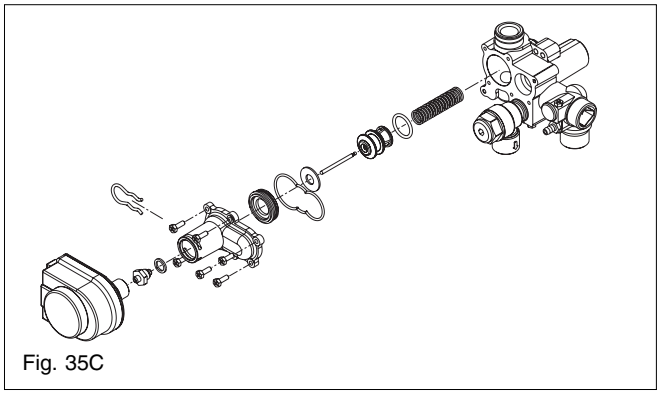
Fig. 35C

7.1 CHECKING APPLIANCE OPERATION

When carrying out any repairs or servicing to the appliance, the relevant commissioning procedure must be undertaken to ensure the continued safe operation of the appliance. Particular attention should be made to ensure gas tightness, water tightness and the electrical integrity of the appliance.

7.2 APPLIANCE MODES OF OPERATION

NOTE

There must be sufficient system water pressure (min. 0.5 bar) to ensure the water pressure switch is activated. If there is insufficient system pressure the pump and fan will be prevented from operating and the low-pressure fault code will be displayed.

The 2-digit display can show several different modes of operation:

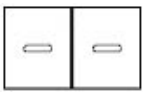

Standby/OFF mode

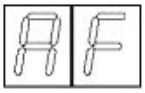

Frost protection mode active

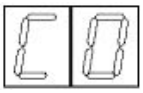

Combustion analysis mode active

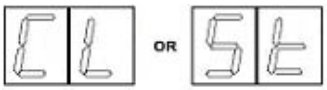

Autostop function active

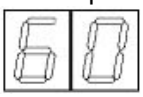

Normal heating request (example 60°C).

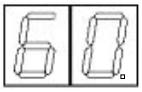

Normal DHW request (example 60°C).

7.2.1 SELECTOR SWITCH IN THE OFF/RESET POSITION

When the selector switch is in the OFF/RESET position, the following functions are active.

Active functions:

- frost-protection system
- pump & fan anti-block

7.2.1 ON-BOARD FUNCTIONS

- **THERMOREGULATION:** when an external sensor is connected to the appliance, the electronic circuitry will automatically adjust the flow outlet temperature to suit local weather conditions in order to maintain comfort and efficiency. A specific operating curve that is most suited to the system type and geographical area can also be selected.
- **OPENTHERM +:** OT+ is a communication protocol that enables the boiler to be linked or connected to other OT+ controls. These controls have been designed to further increase fuel economy by ensuring the boiler remains in the modulation phase during any heating requests. This reduces the amount of ON/OFF periods and therefore increases fuel efficiency.
- **AUTOSTOP:** further information on the AUTOSTOP function, can be obtained from your local Vokera Sales Representative.
- **CO FUNCTION:** the CO function when activated, will allow the appliance to run at maximum and minimum output whilst a combustion analysis check is being carried out. Whilst the CO function is active, all other functions are disabled (minimum power operating period, anti-cycle, set-point, etc). Once enabled, the CO function will remain active for a 15-minute period, or until the function is manually deactivated
- **FROST-PROTECTION:** this function is only active when there are no requests for heating or HW. If the temperature drops below 6°C, the boiler will operate on minimum power until the temperature of the primary thermistor reaches 35°C. Thereafter the pump & fan will over-run for 30-seconds.
- **ANTI-CYCLE FUNCTION:** the anti-cycle function ensures the burner remains switched off for at least 3-minutes after the set-point hysterisis (set-point + 5-deg).
- **PUMP ANTI-BLOCK FUNCTION:** when there has been no heating or HW request for 24-hours, the anti-block cycle is activated. The pump will be activated for a period of 30-seconds.
- **ACTUATOR ANTI-BLOCK FUNCTION:** when there has been no heating or HW request for 24-hours, the anti-block cycle is activated. The divertor valve actuator will motor briefly to the heating position, and then back to the DHW position.
- **DHW PRE-HEAT FUNCTION:** when the mode selector switch is in the DHW pre-heat position, the appliance will light periodically to maintain the temperature of the DHW heat exchanger. When the DHW thermistor and the primary thermistor fall below 35°C and 55°C respectively, the boiler will fire on minimum +25% power until the primary thermistor exceeds 55°C. Thereafter the pump will over-run for a period of 30-seconds.

7.2.5 HEATING MODE

With the selector switch in the heating & hot water position and any additional controls (time clock, programmer, room thermostat, etc.) calling for heat, the appliance will operate in the heating mode. The pump and fan will be activated via the flow temperature sensor. When the fan is sensed to be operating correctly (tacho signal), the ignition sequence commences. Ignition is sensed by the electronic circuit to ensure flame stability at the burner. Once successful ignition has been achieved, the electronic circuitry increases the gas rate to 75% for a period of 15 minutes.

The speed of the fan and therefore the output of the boiler is determined by the temperature of the water sensed by the flow temperature sensor, consequently a high temperature at the flow sensor results in a lower fan speed. As the water temperature increases, the temperature sensors – located on the flow pipe of the boiler – reduce the fan speed via the electronic circuitry. De-

pending on the load, either the water temperature will continue to rise until the set point is achieved or the water temperature will fall whereby fan speed will increase relative to the output required. When the boiler has reached the set point (+ hysterisis), the burner will switch off. The built-in anti-cycle device prevents the burner from re-lighting for approximately 3-minutes. When the temperature of the flow sensor falls below the set point (- hysterisis), the burner will re-light.

NOTE
If the spark/sensing electrode does not sense ignition the appliance will re-attempt ignition a further 4-times then go to lockout. When the set-point has been reached (the position of the heating temperature selector) as measured at the primary thermistor, the appliance will begin the modulation phase whereby the fan and gas valve will continuously modulate to maintain the set-point.
If the temperature continues to rise and exceeds the set-point by 5°C (hysterisis), the burner will shut down. A new ignition sequence will be enabled when the 3- minute anti-cycle has been performed and the temperature at the primary thermistor has dropped 5°C (hysterisis) below the set-point.

7.2.5 DHW MODE

With the selector switch in either the hot water only or heating & hot water position, the appliance will operate in the hot water mode whenever a DHW outlet is opened. A flow rate exceeding 2-litres per minute will activate the DHW flow switch whereupon the pump and fan will be activated via the flow temperature sensor. When the fan is sensed to be operating correctly (tacho signal), the ignition sequence commences. Ignition is sensed by the electronic circuitry to ensure flame stability at the burner. Once successful ignition has been achieved, the electronic circuit allows the gas rate to achieve the modulation value.

NOTE
When the request for heating and/or hot water has been satisfied, the appliance pump and fan may continue to circulate to dissipate any residual heat within the appliance.

7.3 APPLIANCE FAN SPEEDS

The appliance fan speeds require to be checked and/or adjusted prior to making any adjustments to the gas valve or if the main PCB has been replaced.

ATTENTION
Gas type and appliance fan speed (output) **must be set** according to the specific appliance specification. Vokera accepts no responsibility if the gas type and/or fan speed is not correctly adjusted according to the respective appliance specification as detailed on the appliance data badge.

7.3.1 CHECKING/ADJUSTING THE APPLIANCE FAN SPEEDS

Move the selector switch to the OFF position and remove the 3-selector knobs.

7.3.2 ABSOLUTE MAX FAN SPEED

Locate the MAX trimmer (fig. 36) and gently adjust clockwise or counter clockwise to achieve the correct fan speed (see table 7.3.6).
NOTE: the display shows the fan RPM in multiples of 1000, i.e. 2.5 = 2500RPM.

7.3.3 ABSOLUTE MIN FAN SPEED

Locate the MIN trimmer (fig. 36) and gently adjust clockwise or counter clockwise to achieve the correct fan speed (see table 7.3.6).
NOTE: thee display shows the fan RPM in multiples of 1000, i.e. 2.5 = 2500RPM.

7.3.4 IGNITION FAN SPEED

Locate the IGN trimmer (fig. 36) and gently adjust clockwise or counter clockwise to achieve the correct fan speed (see table 7.3.6).
NOTE: the display shows the fan RPM in multiples of 1000, i.e. 2.5 = 2500RPM.

7.3.5 HEATING FAN SPEED

Locate the HTG trimmer (fig. 36) and gently adjust clockwise or counter clockwise to achieve the correct fan speed (see table 7.3.6).
NOTE: the display shows the fan RPM in multiples of 1000, i.e. 2.5 = 2500RPM.

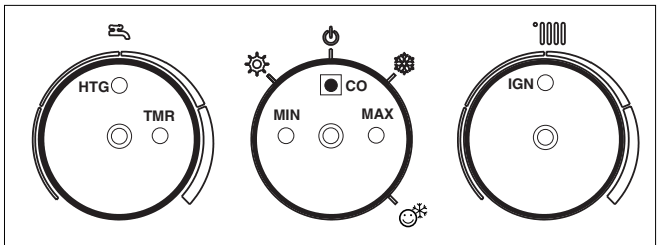

fig. 36

7.3.6 FAN SPEED TABLE

Use the following table to set the corresponding fan speeds that are relative to the appliance you are working on.

FAN SPEED (rpm) TABLE

MODEL	MAX	MIN	HTG	IGN
32BHE	5900	1500	4500	3700

7.4 CHECKING THE CO_2 AND ADJUSTING THE GAS VALVE

THE GAS VALVE MUST BE SET-UP OR ADJUSTED WITH THE AID OF A PROPERLY CALIBRATED FLUE GAS ANALYSER.
Isolate the appliance from the electrical supply and remove the appliance casing as described in 4.7.1. Set the flue gas analyser to read CO_2 and insert the probe into the flue analysis test point (**A, B** fig. 35). Restore the electrical supply to the boiler and switch the boiler to the OFF mode. To adjust the gas valve you must first ensure that the fan speed potentiometers (trimmers) have been set correctly (see 7.3).
Remove the 3-selector knobs, locate and press the CO button (see fig. 36). The appliance will now operate in CO mode for approximately 15-minutes (see 7.10).

7.4.1 GAS VALVE MAXIMUM SETTING

Locate and gently turn the HTG trimmer till the maximum value fan speed (max) is obtained and check that it corresponds with the appropriate CO_2 value (Maximum) for the respective appliance. If the CO_2 reading is correct, proceed to gas valve minimum setting (7.4.2).
However, if the CO_2 reading is incorrect, the maximum gas pressure must be adjusted as follows:

- using a 2.5mm Allen key, very slowly turn the maximum adjustment screw (see fig. 37) – clockwise to decrease, counter clockwise to increase – until the correct value is displayed on the CO_2 analyser (allow time for the analyser to stabilise).

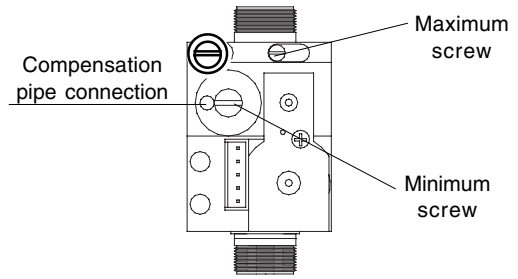

fig. 37

7.4.2 GAS VALVE MINIMUM SETTING

Locate and gently turn the HTG trimmer till the minimum value fan speed (max) is obtained and check that it corresponds with the appropriate CO_2 value (Minimum) for the respective appliance. If the CO_2 reading is correct, rotate the HTG trimmer until the correct value is obtained for the respective appliance (see fan speed table) and proceed to 7.4.3. However, if the CO_2 reading is incorrect, the minimum gas pressure must be adjusted as follows:

- using a suitable screwdriver, very slowly turn the minimum adjustment screw (see fig. 38) – clockwise to increase, counter clockwise to decrease - until the correct value is displayed on the CO_2 analyser (allow time for the analyser to stabilise).

7.4.3 COMPLETION

On completion of the combustion analysis check and/or any gas valve adjustment, set the HTG trimmer to the corresponding value as detailed in the fan speed table. Refit the 3-selector knobs and move the mode selector to the OFF position. Remove the test probe from the test point and refit the sealing screw/s and/or cap.

IMPORTANT
A GAS TIGHTNESS CHECK MUST BE CARRIED OUT IF ANY GAS CARRYING COMPONENTS HAVE BEEN REMOVED, REPLACED OR DISTURBED.

7.5 COMBUSTION ANALYSIS TEST

A combustion analysis check can easily be carried out on the appliance via the test points located on the top of the appliance (see 7.4).

- Insert the flue gas analyser probe into the flue gas test point (see fig. 35).
- Operate the boiler in CO mode and compare the values with those shown in section 2 (Nat. Gas) or section 10 (LPG). If different adjust the gas valve according to 7.4.1, 7.4.2, & 7.4.3.

7.6 CHECKING THE EXPANSION VESSEL

Carry out the component removal procedure as described in 6.4. You must ensure that the boiler is completely drained of water. Using a suitable pressure gauge, remove dust cap on expansion vessel and check the charge pressure. The correct charge pressure should be 1.0 bar ± 0.1 bar. If the charge pressure is less, use a suitable pump to increase the charge.

NOTE
You must ensure the drain valve is in the open position whilst re-charging takes place. Replace the dust cap and carry out the relevant commissioning procedure (section 5).

7.7 EXTERNAL FAULTS

Before carrying out any faultfinding or component replacement, ensure the fault is not attributable to any aspect of the installation.

7.7.1 INSTALLATION FAULTS

Symptom	Possible cause
No display/ignition	Check wiring/check electrical supply
No hot water	Check pipe-work
No heating	Check external controls

Fault code	Possible cause
10	Check gas supply, check flue system, check polarity

7.8 ELECTRICAL CHECKS

Any electrical checks must be carried out by a suitably qualified person.

7.8.1 EARTH CONTINUITY TEST

Isolate the appliance from the electrical supply, and using a suitable multi-meter carry out a resistance test. Connect test leads between an appliance earth point and the earth wire of the appliance supply cable. The resistance should be less than 1 OHM. If the resistance is greater than 1 OHM check all earth wires and connectors for continuity and integrity.

7.8.2 SHORT CIRCUIT CHECK

Isolate the appliance from the electrical supply, and using a suitable multi-meter, carry out a short circuit test between the Live & Neutral connections at the appliance terminal strip (fig.17). Repeat above test on the Live & Earth connections at the appliance terminal strip (fig.16).

NOTE
Should it be found that the fuse has failed but no fault is indicated, a detailed continuity check will be required to trace the fault. A visual inspection of components may also assist in locating the fault.

7.8.3 POLARITY CHECK

With the appliance connected to the electrical supply and using a suitable multimeter, carry out the following voltage tests:

- connect test leads between the Live & Neutral connections at the appliance terminal strip (fig.16). The meter should read approximately 230V ac. If so proceed to next stage. If not, see 7.8.4.
- connect test leads between the Live & Earth connections at the appliance terminal strip (fig.16). The meter should read approximately 230V ac. If so proceed to next stage. If not, see 7.8.4.
- connect test leads between the Neutral & Earth connections at the appliance terminal strip (fig.16). The meter should read approximately 0 – 15Vac. If so polarity is correct. If not, see 7.8.4.

7.8.4 REVERSED POLARITY OR SUPPLY FAULT

Repeat the above tests at the appliance isolator, if testing reveals correct polarity and/or supply at the isolator, re-check wiring and connections between the isolator and the appliance. If tests on the isolator also reveal reversed polarity or a supply fault, consult the local electricity supplier for advice.

7.8.5 RESISTANCE TO EARTH CHECK

Isolate the appliance from the electrical supply, and using a suitable multi-meter carry out a resistance test. Connect test leads between the Live & Earth connections at the appliance terminal strip (fig. 16). If the meter reads other than infinity there is a fault that must be isolated, carry out a detailed continuity check to identify the location of the fault.

These series of checks must be carried out before attempting any faultfinding procedures on the appliance. On completion of any task that required the disconnection and re-connection of any electrical wiring or component, these checks must be repeated.

7.9 FAULT FINDING

Before attempting any faultfinding, the electrical checks as detailed in 7.8 must be carried out. Isolate the appliance from the electrical supply. Disconnect any external controls from terminal plug M6 (fig. 16), and insert a link-wire between the two wires at the 'TA' connections (fig. 19).

NOTE

Restore the electrical supply to the boiler and turn the selector switch to the on position. The boiler should now function as described in section 7.2. Should the boiler fail to respond, the internal fuses and connectors should be checked to ensure integrity and continuity. If the boiler still fails to respond, refer to the detailed faultfinding flowcharts located at the end of this section.

7.10 BOILER CONFIGURATION

The boiler can be configured by means of the JUMPER Tag which configuration is shown in the below:

JP4 CONFIGURATION

- JUMPER ON POSITION 1: FLOOR HEATING (IF SET)/STANDARD HEATING (IF NOT USED)
- JUMPER ON POSITION 2: (UNUSED)
- JUMPER ON POSITION 3: (UNUSED)
- JUMPER ON POSITION 4: (UNUSED)
- JUMPER ON POSITION 5: COMBI
- JUMPER ON POSITION 6: (UNUSED)

FOR CONFIGURATION SEE REFERENCE NUMBER (PIN1 ON PCB) AS SHOWN IN BELOW.

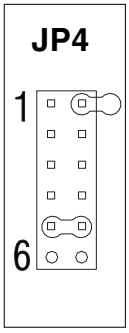

7.12 COMPONENT VALUES & CHARACTERISTICS

COMPONENT	VALUE
Fan	230Vac
Pump	230Vac
Valve actuator (Combi only)	230Vac
Ignition transformer	230Vac
Gas valve	230Vac
Room thermostat connection	230Vac
NTC thermistor (dry contact)	10Kohm
NTC thermistor (wet contact)	10Kohm
FUNCTION	**VALUE**
Standard Heating temperature range (min – max °C)	40 - 80
Floor Heating temperature range (min – max °C)	20 - 45
DHW temperature range (min – max °C)	35 - 60
75% maximum CH time	15 min
Heating OFF hysterisis (°C)	SP + 5
Heating ON hysterisis (°C)	SP – 5
DHW OFF hysterisis (°C)	SP + 5
DHW ON hysterisis (°C)	SP + 3
Anti-cycle delay	3-min
Pump over-run	30-sec
Low output (min. output + %)	Min+25
CO function max temp. (°C)	95
CO re-light temp. (°C)	75
CO function time	15-min
Flow NTC max temp. (°C)	95
High limit thermostat (°C)	105
Burner thermostat (°C)	170
Maximum differential (°C)	35
IGNITION CONTROL	**VALUE**
Ignition attempts before L/O (lockout)	5
Re-ignition attempts after loss of flame signal	5

7.11 FAULT CODES

When the boiler detects a temporary fault condition, the appropriate code is shown flashing on the display. If/when the fault code is final, the pump will perform a 60-second post circulation and the red LED will be illuminated.

CODE	CAUSE	ALARM TYPE	ACTION
AL10	Ignition failure, flame not sensed, condense sensor activated	Final	Reset, check appliance operation
AL20	Limit thermostat fault/fumes thermostat fault	Final	Reset, check appliance operation
AL21	External device fault (UHT/CPA)	Final	Reset, check appliance
AL26	Return temperature too high	Temporary than final	Reset, check appliance operation, check thermistor
AL28	Temperature differential inverted (return sensor temperature higher than thermistors flowsensor temperature)	Temporary than final	Reset, check pump, ensure there is sufficient circulation around heating circuit/s
AL34	Fan tacho signal fault	Final	Reset check appliance operation, check fan
AL40	Insufficient system water pressure	Final	Check/refill system pressure, reset, check appliance operation
AL41	Insufficient system water pressure	Temporary	Check/refill system pressure, check appliance operation
AL52	Internal fault	Final	Reset, check appliance operation
AL55	Jumper tag fault	Final	Check jumper tag configuration
AL60	DHW thermistor fault	Temporary	Check DHW thermistor
AL71	Primary (flow) thermistor fault	Temporary	Check primary thermistor, check wiring
AL73	Return thermistor fault	Temporary	Check return thermistor, check wiring
AL74	Over temperature due to low H_2O pressure	Final	Reset, check appliance operation, check pump, ensure there is sufficient circulation around heating circuit/s
AL79	Flow temperature too high, temperature differential too high	Temporary than final	Reset, check appliance operation, check thermistors

8.1 EXTERNAL WIRING

The appliance comes with a factory fitted (TA) link to allow basic operation of the boiler via the mode selector switch. If external controls are to be added to the system, they must be connected to the appliance as shown in the following diagrams. For advice on controls that are not featured in this book, please contact Vokera technical on 0844 391 0999.

8.1.1 EXTERNAL WIRING LIMITATIONS

Any external wiring must remain within the limits as detailed in the table below:

CONNECTION	MAX. LENGTH
External sensor	30-metres
Room thermostat	30-metres
OT+ connection	30-metres

8.2 TYPICAL CONTROL APPLICATIONS

The appliance can be used with the following controls:

- single-channel, voltage-free time clocks (fig. 39).
- programmable room thermostats (fig. 40).
- OT+ control, please contact Vokera technical for detailed instruction on specific OT+ controls.
- vokera external sensor.

8.3 OTHER DEVICES

Contact the controls manufacturer and/or Vokera technical department should you require more specific information on the suitability of a particular control. Further guidance on the recommended practice for the installation of external controls, can be found in CHeSS – HC5/HC6 (www.energyefficiency.gov.uk).

IMPORTANT

- The boiler must always be supplied with a permanent 230V electrical supply.
- Always remove the link between TA & TA on the appliance high-voltage terminal strip whenever additional controls are connected to the appliance.
- Do not connect any controls or auxiliary equipment to the low-voltage terminal strip, other than that approved/supplied by Vokera Ltd.

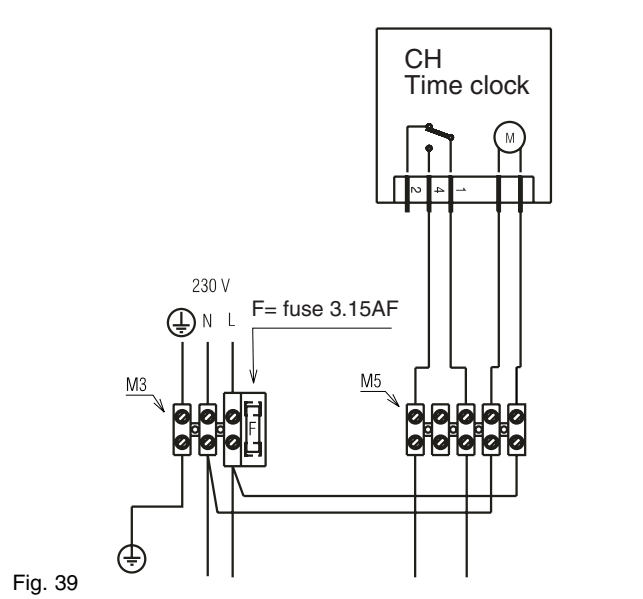

Fig. 39

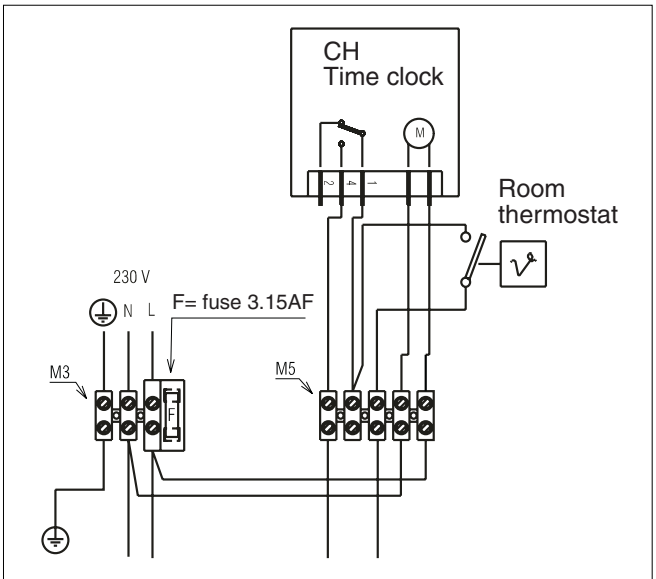

Fig. 40

OPTIONAL DEVICE (24V) TERMINAL BLOCK

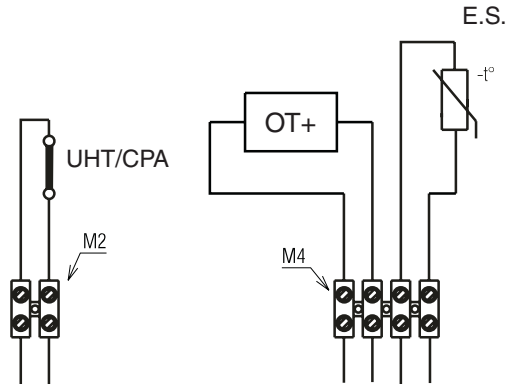

U.H.T. = underfloor heating thermostat
C.P.A.= condensate pump alarm
E.S.= external sensor
OT+= opentherm + connection

Fig. 41

FUNCTIONAL DIAGRAM

Fig. 38

NOTE: L-N-E connection is advisable

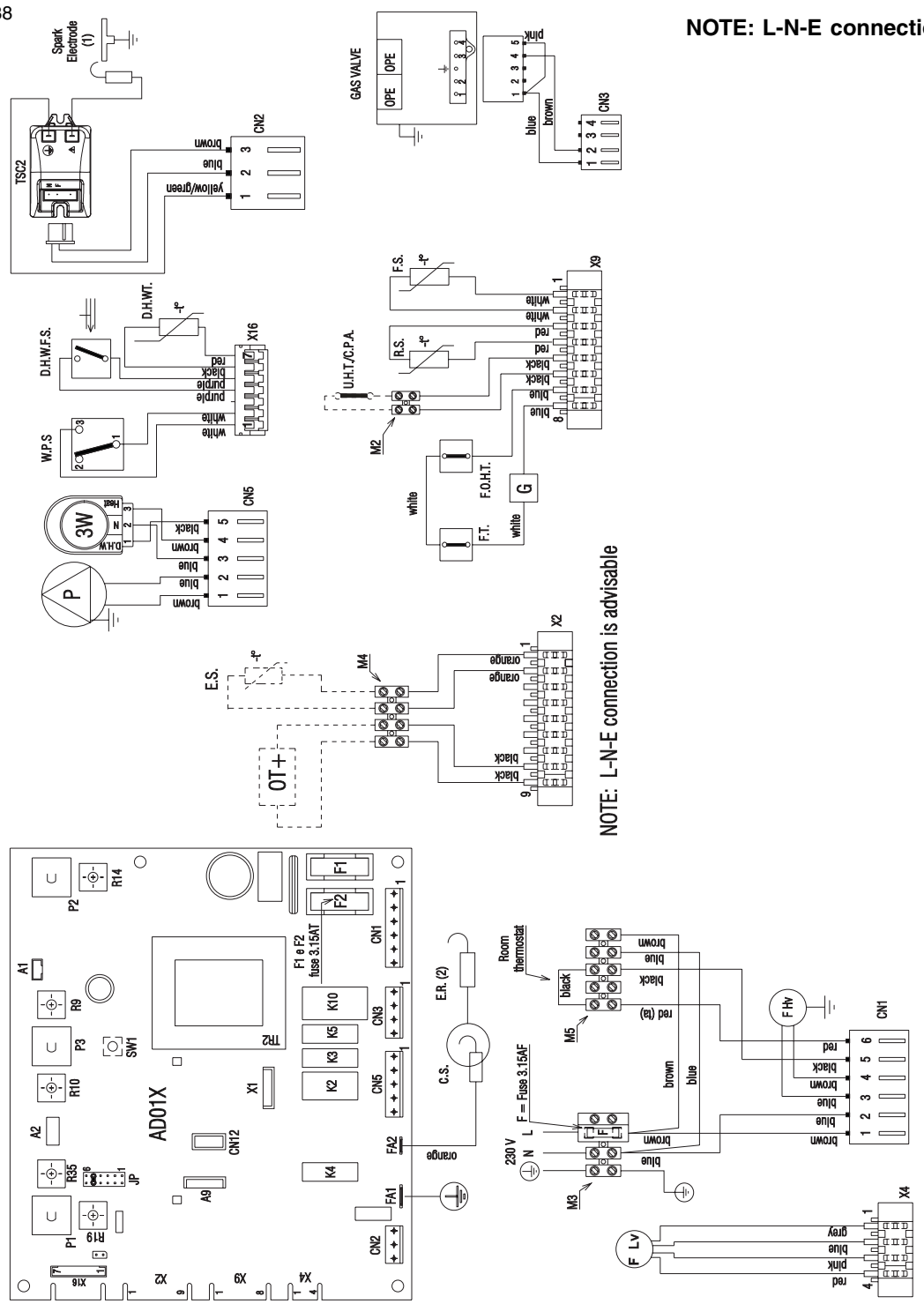

F Hv	Fan power supply 230 V
F Lv	Fan signal control
P	Pump
F	Fuse 3.15A F (fast)
F1-F2	Fuse 3.15A T (delay)
OPE	Gas valve solenoids
S.E. (1)	Spark electrode
S.E. (2)	Sense electrode
C.S.	Condensate sensor
G.V.	Gas valve
TSC2	Ignition transformer
TR2	PCB transformer
OT+	Open therm + connection
E.S	External sensor
WPS	Water pressure switch
FS	Flow thermistor (NTC)
RS	Return thermistor (NTC)
AD01X	Main PCB
CN1÷CN5	Connection to PCB high voltage
X2÷X16	Connection to PCB low voltage
F.O.H.T	Flow over heat thermostat
F.T	Fume thermostat
G	Cable connector
M3-M5	Terminal strip for supply in / clock / room thermostat
M2-M4	Terminal strip for condense pump / low temperature thermostat / open therm + connection / esternal sensor
D.H.W.F.S	Domestic hot water flow switch
D.H.W.T	Domestic hot water temperature
3W	3 way motor
UHT	Underfloor heating thermostat
CPA	Condensate pump alarm
JP5	For combi boiler
X1	Connector minitank (unused)
CN12	Service connector
SW1	Co button
A1	24V output to 2CH - programmer
P1	DHW potentiometer
P2	Heating potentiometer
P3	Selector switch
R9	Trimmer for maximum output
R10	Trimmer for minimum output
R14	Trimmer for ignition fan speed
R19	Trimmer for heating fan speed
R35	Trimmer thermoregulation

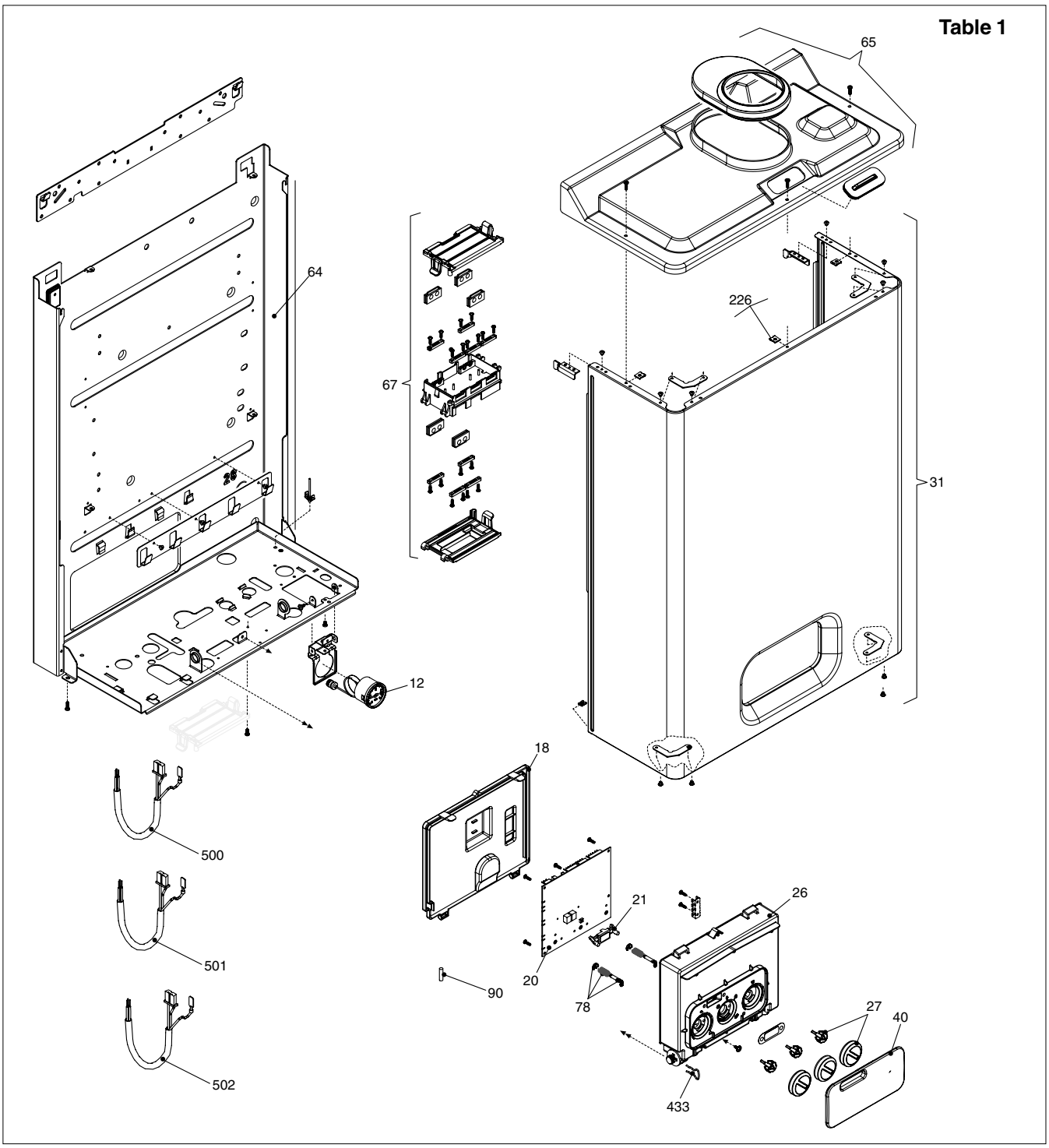

POS.	DESCRIPTION	32 BHE
12	Quick primer pressure gauge	R10028894
18	Cover	20000761
20	Printed circuit board	20008307
21	Led light guide	R10028557
26	Instrumental panel	20011082
27	Knob assembly	R10028559
31	Instrumental panel	20011393
40	Door panel	R10030136
64	Frame assembly	R10028809
65	Case cover	20011392
67	Wiring box	R01005468
78	Hinge assembly	R01005442
90	Fuse	R3478
226	Clip	R5128
433	Clip	R10024986
500	Low tension cable	20000764
501	Power wiring harness	20000768
502	Wiring harness	20000762

Table 2

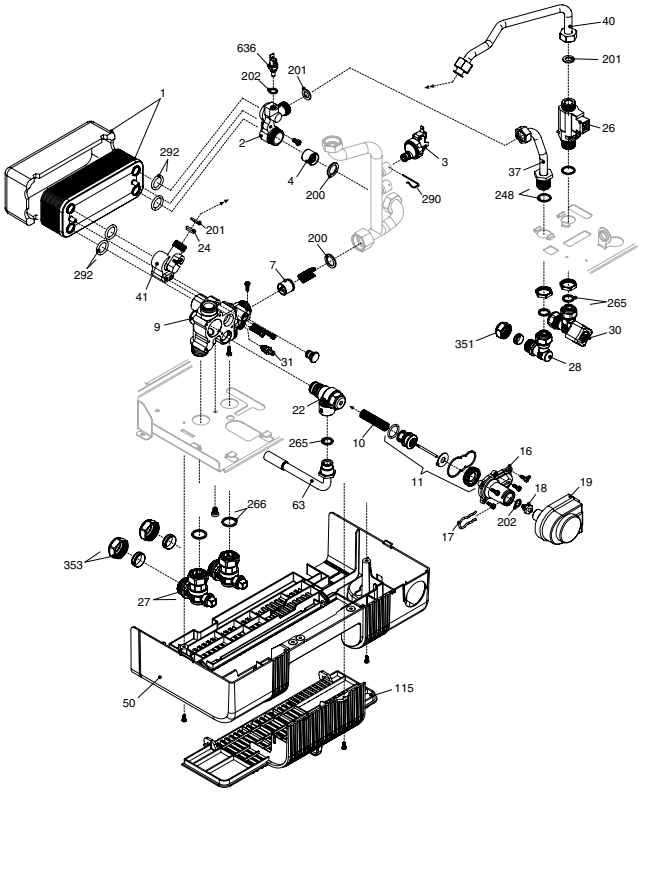

POS.	DESCRIPTION	32 BHE
1	Exchanger	R1957
2	Fitting/union	R9807
3	Pressure water switch	R10028141
4	Non return valve	R2908
7	Heating by-pass valve	R2047
9	Distributor	R10028812
10	3 port valve spring	R6862
11	3 way valve overhaul kit	R01005127
16	Water valve cover	R2904
17	Motorised valve fixing fork wrench	R2906
18	OR union assembly bracket	R6919
19	Actuator	R2905
22	Safety valve	R2907
24	Flow governor	R10020041
24	Flow governor	R9430
24	Flow governor	R1321
26	Dhw actuator	R10022349
27	Heating cock	R1789
28	Connection	R1790
30	Water supply stop cock	R7099
31	Venting-plug	R10023235
37	Pipe	R1631
40	Pipe	R10022125
41	Fitting/union	R2903
50	Cover	20007692
63	Pipe	R10027841
115	Door panel	R10028839
200	Washer	R5023
201	Washer	R5026
202	Washer	R5041
248	Washer	R5208
265	Washer	R5236
266	Washer	R5237
290	Clip	R2165
292	O ring	R7999
351	Nut	R1823
353	Nut	R1824
636	Detector	20004978

Table 3

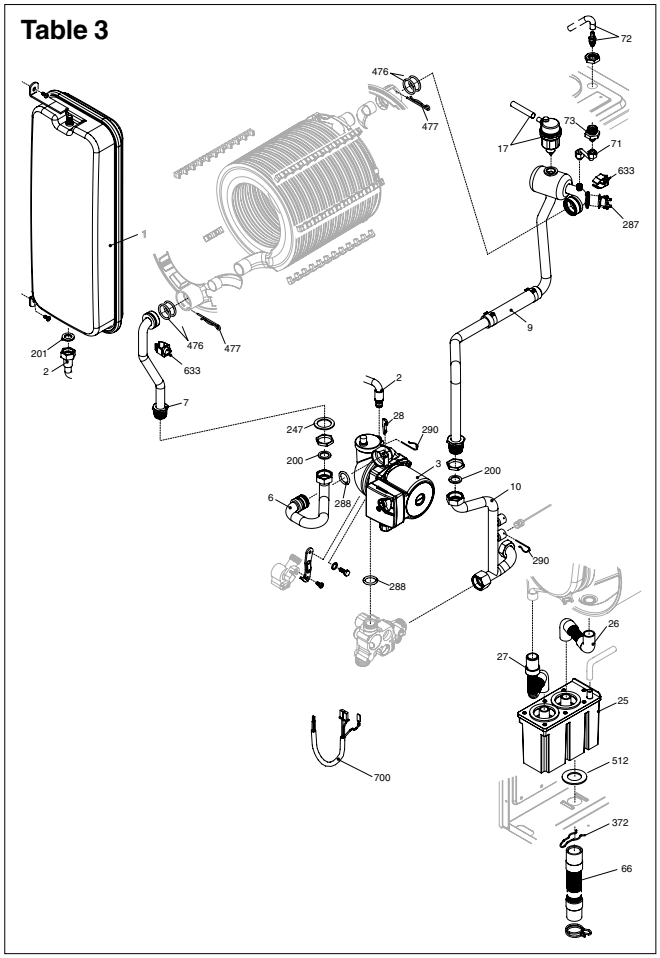

POS.	DESCRIPTION	32 BHE
1	Expansion vessel	R10028811
2	Pipe	R10023603
3	Pump	20011402
6	Pipe	R10028818
7	Pipe	R10026267
9	Pipe	R10029457
10	Pipe	R10028817
17	Air venting plug	R10029306
25	Siphon	R10028405
26	Flexible pipe	R10027191
27	Flexible pipe	R10027192
28	Key	R9263
66	Flexible pipe	R10026272
71	Pipe	R10028516
72	Venting-plug	R10023235
73	Cock	R10028431
200	Washer	R5023
201	Washer	R5026
247	Washer	R5203
287	High limit thermostat	R2258
288	Ring	R6898
290	Clip	R2165
372	Clip	R2588
476	O ring	R10026324
477	Split pin	R10026269
512	Washer	R10027193
633	Detector	20003819
700	Pump cable	20000763

Table 4

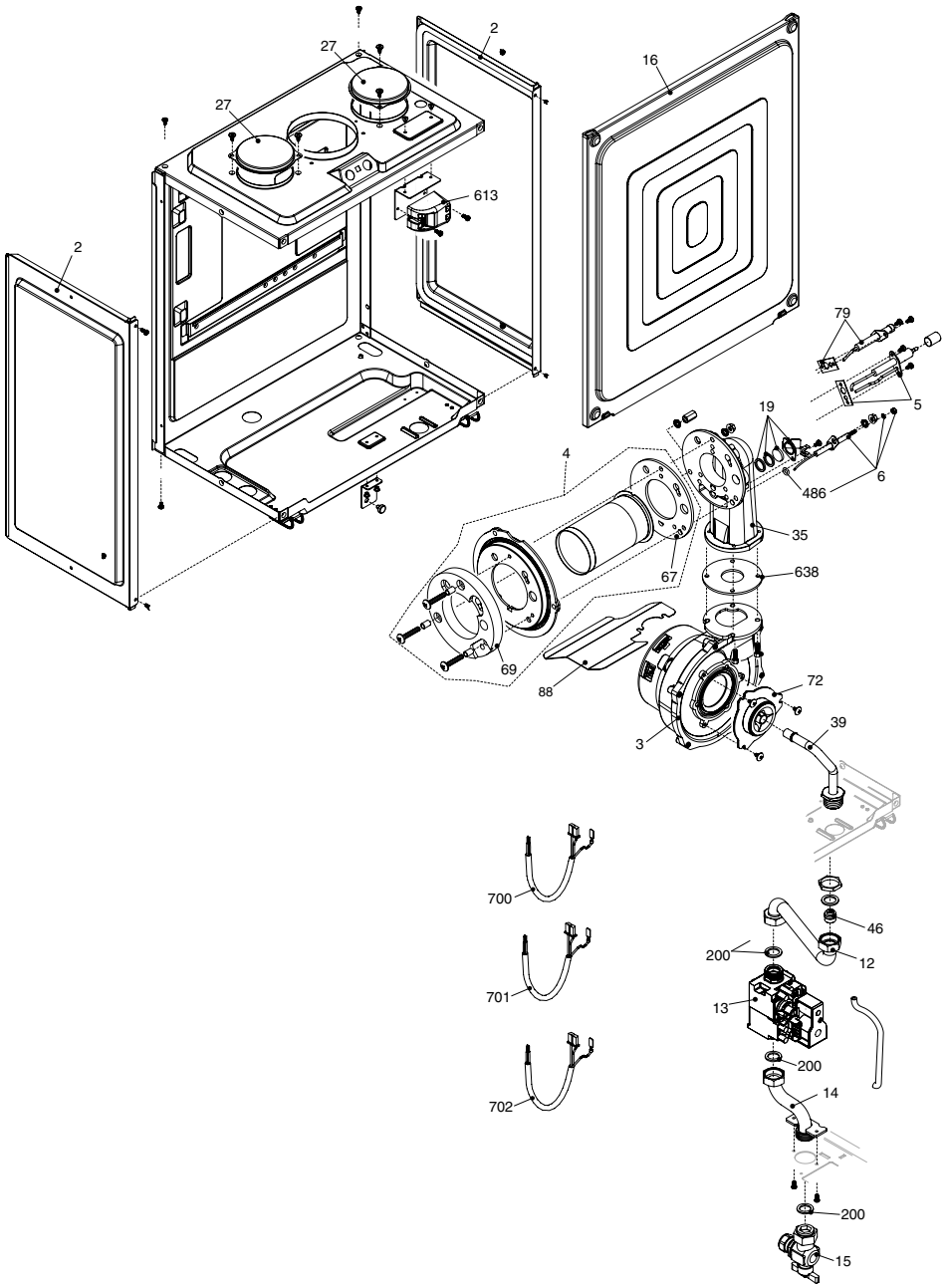

POS.	DESCRIPTION	32 BHE
2	Roomsealed chamber side	R10026231
3	Fan	R10028456
4	Burner assembly	R10028642
5	Spark / ignition electrode	R10027864
6	Condense electrode	R10026316
12	Gas pipe	R10028814
13	Gas valve	R10028538
14	Gas pipe	R10028813
15	Gas cock	20011403
16	Chamber cover	R10026230
19	Glass stopper assembly	R10026328
27	Plug	R10023805
35	Air gas conveyor	R10028420
39	Pipe	20000769
46	Gas diaphragm	R10027161
67	Washer Ø 62	R10026322
69	Tryton	R10028425
72	Mixer	R10024295
79	Flame detection electrode	R10028422
88	Fan baffle	20006411
200	Washer	R5023
486	O ring	R10026325
497	Washer	R10026796
613	Ignition transformer	20001563
700	Combustion-fan cable	20001617
701	Spark electrode cable	R10026558
702	Gas valve cable	20000767

Table 5

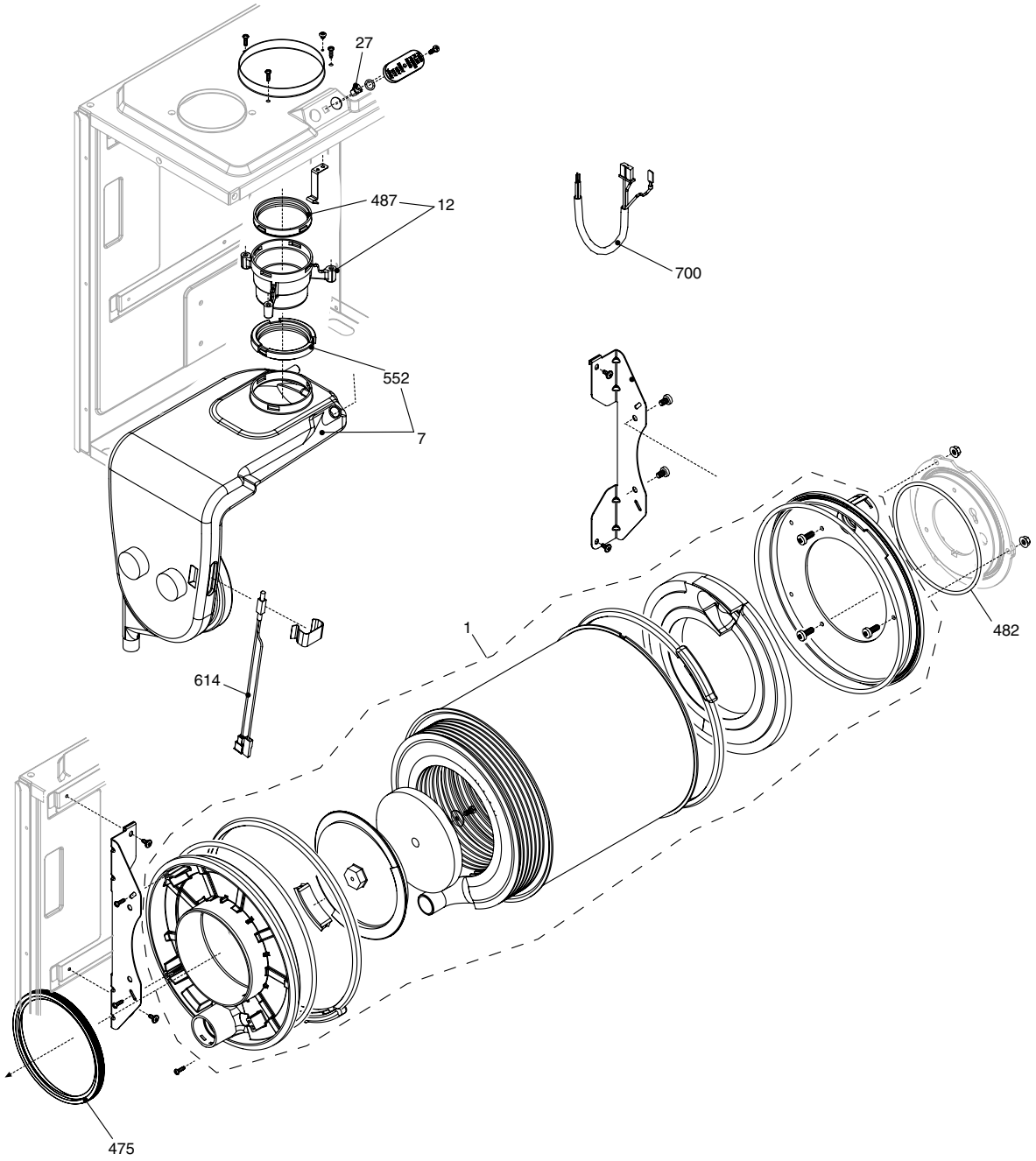

POS.	DESCRIPTION	32 BHE
1	Condensing exchanger assembly	R01005366
7	Conveyor	R10028623
12	Flue drain connection	R10028421
27	Nut screw	R10020625
475	Washer Ø 125	R10026323
482	Washer	R10026366
487	Washer Ø 60	R10026345
552	Washer Ø 60	R10028426
614	High limit thermostat	20001564
700	Combustion cable	20000765

SECTION 10 LPG INSTRUCTIONS

10.1 RELATED DOCUMENTS

BS 5440	**PARTS 1 & 2**	**FLUES & VENTILATION REQUIREMENTS**
BS 5449	**PART 1**	**FORCED CIRCULATION OF HOT WATER SYSTEMS**
BS 5482	**PART 1**	**DOMESTIC BUTANE & PROPANE GAS BURNERS IN PERMAMENT DWELLINGS**
BS 5546		**INSTALLATION OF GAS HOT WATER SUPPLIES FOR DOMESTIC PURPOSES**
BS 6798		**INSTALLATION OF BOILERS OF RATED NOT EXCEEDING 60kW**

10.2 TECHNICAL DATA

Gas Pressures	Unica 32BHE
Inlet pressure	37.0mbar
Maximum gas rate (kg/hr)	2.48
Minimum gas rate (kg/hr)	0.54
Injector size	4.7mm
CO_2 max (%)	10.0
CO_2 min (%)	10.0
CO max (mg/kWh)	200
CO min (mg/kWh)	20
NOx max (PPM) mg/kWh	50
NOx min (PPM) mg/kWh	30
CO/CO_2 ratio @ max	0.002 to 1
CO/CO_2 ratio @ min	0.0002 to 1
SEDBUK 'A' (%)	92.7

10.3 CONVERTING THE APPLIANCE GAS TYPE

To convert the appliance to another gas type it is necessary to change the burner injector, adjust the appliance fan speeds and adjust the gas valve (CO_2).

- To change the injector see 6.12.1
- To adjust the fan speeds see 10.7
- To adjust CO2 values see 10.6

10.4 GAS SUPPLY

The gas supply must be connected to the appliance by a competent LPG installer and must be of sufficient size to supply the appliance at its maximum output. An existing supply must be checked to ensure that it is of adequate size to deal with the maximum rated input of this and any other appliances that it serves.

10.5 GAS SUPPLY INSTALLATION

The entire installation including the meter must be purged and checked for gas tightness.

10.6 CHECKING THE CO_2 AND ADJUSTING THE GAS VALVE

THE GAS VALVE MUST BE SET-UP OR ADJUSTED WITH THE AID OF A PROPERLY CALIBRATED FLUE GAS ANALYSER.

Isolate the appliance from the electrical supply and remove the appliance casing as described in 4.7.1. Set the flue gas analyser to read CO_2 and insert the probe into the flue analysis test point (**A, B** fig. 35). Restore the electrical supply to the boiler and switch the boiler to the OFF mode. To adjust the gas valve you must first ensure that the fan speed potentiometers (trimmers) have been set correctly (see 10.7).

Remove the 3-selector knobs, locate and press the CO button (fig. 36). The appliance will now operate in CO mode for approximately 15-minutes (see 7.10).

10.6.1 GAS VALVE MAXIMUM SETTING

Locate and gently turn the HTG trimmer till the maximum value fan speed (max) is obtained and check that it corresponds with the appropriate CO_2 value (maximum) for the respective appliance. If the CO_2 reading is correct, proceed to gas valve minimum setting (10.6.2).

However, if the CO_2 reading is incorrect, the maximum gas pressure must be adjusted as follows:

- using a 2.5mm Allen key, very slowly turn the maximum adjustment screw (fig. 38) – clockwise to decrease, counter clockwise to increase – until the correct value is displayed on the CO_2 analyser (allow time for the analyser to stabilise).

10.6.2 GAS VALVE MINIMUM SETTING

Locate and gently turn the HTG trimmer till the minimum value fan speed (min) is obtained and check that it corresponds with the appropriate CO_2 value (minimum) for the respective appliance. If the CO_2 reading is correct, rotate the HTG trimmer until the correct value is obtained for the respective appliance (see fan speed table) and proceed to 10.6.3.

However, if the CO_2 reading is incorrect, the minimum gas pressure must be adjusted as follows:

- using a suitable screwdriver, very slowly turn the minimum adjustment screw (fig. 38) – clockwise to increase, counter clockwise to decrease - until the correct value is displayed on the CO_2 analyser (allow time for the analyser to stabilise).

10.6.3 COMPLETION

On completion of the combustion analysis check and/or any gas valve adjustment, set the HTG trimmer to the corresponding value as detailed in the fan speed table. Refit the 3-selector knobs and move the mode selector to the OFF position.
Remove the test probe from the test point and refit.

IMPORTANT
A GAS TIGHTNESS CHECK MUST BE CARRIED OUT IF ANY GAS CARRYING COMPONENTS HAVE BEEN REMOVED, REPLACED, OR DISTURBED.

FAN SPEED (rpm) TABLE - LPG

MODEL	MAX	MIN	HTG	IGN
32BHE	5900	1500	4500	3700

10.7 APPLIANCE FAN SPEEDS

The appliance fan speeds require to be checked and/or adjusted prior to making any adjustments to the gas valve or if the main PCB has been replaced.

ATTENTION
Gas type and appliance fan speed (output) **must be set** according to the specific appliance specification. Vokera accepts no responsibility if the gas type and/or fan speed is not correctly adjusted according to the respective appliance specification as detailed on the appliance data badge.

10.7.1 CHECKING/ADJUSTING THE APPLIANCE FAN SPEEDS

Move the selector switch to the OFF position and remove the 3-selector knobs.

10.7.2 ABSOLUTE MAX FAN SPEED

Locate the MAX trimmer (fig. 36) and gently adjust clockwise or counter clockwise to achieve the correct fan speed (see table above).
NOTE: the display shows the fan RPM in multiples of 1000, i.e. 2.5 = 2500RPM.

10.7.3 ABSOLUTE MIN FAN SPEED

Locate the MIN trimmer (fig. 36) and gently adjust clockwise or counter clockwise to achieve the correct fan speed (see table above).
NOTE: the display shows the fan RPM in multiples of 1000, i.e. 2.5 = 2500RPM.

10.7.4 IGNITION FAN SPEED

Locate the IGN trimmer (fig. 36) and gently adjust clockwise or counter clockwise to achieve the correct fan speed (see table above).
NOTE: the display shows the fan RPM in multiples of 1000, i.e. 2.5 = 2500RPM.

10.7.5 HEATING FAN SPEED

Locate the HTG trimmer (fig. 36) and gently adjust clockwise or counter clockwise to achieve the correct fan speed (see table above).
NOTE: the display shows the fan RPM in multiples of 1000, i.e. 2.5 = 2500RPM.

GAS BOILER SYSTEM COMMISSIONING CHECKLIST

This Commissioning Checklist is to be completed in full by the competent person who commissioned the boiler as a means of demonstrating compliance with the appropriate Building Regulations and then handed to the customer to keep for future reference.

Failure to install and commission this equipment to the manufacturer's instructions may invalidate the warranty but does not affect statutory rights.

Customer Name _____ Telephone Number _____

Address _____

Boiler Make and Model _____

Boiler Serial Number

Commissioned by *(print name)* _____ CORGI ID Number _____

Company Name _____ Telephone Number _____

Company Address _____

_____ Commissioning Date _____

To be completed by the customer on receipt of a Building Regulations Compliance Certificate*:

Building Regulations Notification Number *(if applicable)*

CONTROLS Tick the appropriate boxes

Time and Temperature Control to Heating	Room Thermostat and Programmer/Timer ☐	Programmable Room Thermostat ☐	Load/Weather Compensation ☐	Optimum Start Control ☐
Time and Temperature Control to Hot Water		Cylinder Thermostat and Programmer/Timer ☐		Combination Boiler ☐
Heating Zone Valves			Fitted ☐	Not Required ☐
Hot Water Zone Valves			Fitted ☐	Not Required ☐
Thermostatic Radiator Valves			Fitted ☐	Not Required ☐
Automatic Bypass to System			Fitted ☐	Not Required ☐
Boiler Interlock				Provided ☐

ALL SYSTEMS

The system has been flushed and cleaned in accordance with BS7593 and boiler manufacturer's instructions Yes ☐

What system cleaner was used?

What inhibitor was used? Quantity _____ *litres*

CENTRAL HEATING MODE Measure and Record:

Gas Rate _____ m^3/hr OR _____ ft^3/hr

Burner Operating Pressure (if applicable) _____ mbar OR Gas Inlet Pressure _____ mbar

Central Heating Flow Temperature _____ °C

Central Heating Return Temperature _____ °C

COMBINATION BOILERS ONLY

Is the installation in a hard water area (above 200ppm)? Yes ☐ No ☐

If yes, has a water scale reducer been fitted? Yes ☐ No ☐

What type of scale reducer has been fitted?

DOMESTIC HOT WATER MODE Measure and Record:

Gas Rate _____ m^3/hr OR _____ ft^3/hr

Burner Operating Pressure (at maximum rate) _____ mbar OR Gas Inlet Pressure (at maximum rate) _____ mbar

Cold Water Inlet Temperature _____ °C

Hot water has been checked at all outlets Yes ☐ Temperature _____ °C

Water Flow Rate _____ *l/min*

CONDENSING BOILERS ONLY

The condensate drain has been installed in accordance with the manufacturer's instructions and/or BS5546/BS6798 Yes ☐

ALL INSTALLATIONS

If required by the manufacturer, record the following CO_2 _____ % OR CO _____ *ppm* OR CO/CO_2 Ratio _____

The heating and hot water system complies with the appropriate Building Regulations Yes ☐

The boiler and associated products have been installed and commissioned in accordance with the manufacturer's instructions Yes ☐

The operation of the boiler and system controls have been demonstrated to and understood by the customer Yes ☐

The manufacturer's literature, including Benchmark Checklist and Service Record, has been explained and left with the customer Yes ☐

Commissioning Engineer's Signature

Customer's Signature

(To conr m satisfactory demonstration and receipt of manufacturer's literature)

*All installations in England and Wales must be notified to Local Authority Building Control (LABC) either directly or through a Competent Persons Scheme. A Building Regulations Compliance Certificate will then be issued to the customer.

benchmark COLLECTIVE MARK
THE MARK OF QUALITY FOR THE INSTALLATION, COMMISSIONING AND SERVICING OF DOMESTIC HEATING AND HOT WATER SYSTEMS

©Heating and Hotwater Industry Council (HHIC)

SERVICE RECORD

It is recommended that your heating system is serviced regularly and that the appropriate Service Record is completed.

Service Provider

Before completing the appropriate Service Record below, please ensure you have carried out the service as described in the manufacturer's instructions.

Always use the manufacturer's specified spare part when replacing controls.

SERVICE 1 Date

Energy Efficiency Checklist completed? Yes ☐ No ☐

Engineer Name

Company Name

Telephone Number

CORGI ID Number

Comments

Signature

SERVICE 2 Date

Energy Efficiency Checklist completed? Yes ☐ No ☐

Engineer Name

Company Name

Telephone Number

CORGI ID Number

Comments

Signature

SERVICE 3 Date

Energy Efficiency Checklist completed? Yes ☐ No ☐

Engineer Name

Company Name

Telephone Number

CORGI ID Number

Comments

Signature

SERVICE 4 Date

Energy Efficiency Checklist completed? Yes ☐ No ☐

Engineer Name

Company Name

Telephone Number

CORGI ID Number

Comments

Signature

SERVICE 5 Date

Energy Efficiency Checklist completed? Yes ☐ No ☐

Engineer Name

Company Name

Telephone Number

CORGI ID Number

Comments

Signature

SERVICE 6 Date

Energy Efficiency Checklist completed? Yes ☐ No ☐

Engineer Name

Company Name

Telephone Number

CORGI ID Number

Comments

Signature

SERVICE 7 Date

Energy Efficiency Checklist completed? Yes ☐ No ☐

Engineer Name

Company Name

Telephone Number

CORGI ID Number

Comments

Signature

SERVICE 8 Date

Energy Efficiency Checklist completed? Yes ☐ No ☐

Engineer Name

Company Name

Telephone Number

CORGI ID Number

Comments

Signature

SERVICE 9 Date

Energy Efficiency Checklist completed? Yes ☐ No ☐

Engineer Name

Company Name

Telephone Number

CORGI ID Number

Comments

Signature

SERVICE 10 Date

Energy Efficiency Checklist completed? Yes ☐ No ☐

Engineer Name

Company Name

Telephone Number

CORGI ID Number

Comments

Signature

Vokèra
heating for life

Registered address:
Vokèra Ltd
Borderlake House
Unit 7 Riverside Industrial Estate
London Colney
Herts AL2 1HG

enquiries@vokera.co.uk

www.vokera.co.uk
www.vokera.ie

Sales, General Enquires
T 0844 391 099
F 0844 391 0998

Vokèra Ireland
West Court, Callan
Co Kilkenny
T 056 7755057
F 056 7755060

Vokèra Limited reserve the right to change specification without prior notice
Consumers statutory rights are not affected.

A Riello Group Company.
Company Reg No: 1047779

Cod. 20001096 0409 Ed. 0