Vokèra
heating for life

# Mynute 24m

## Standard efficiency system boiler

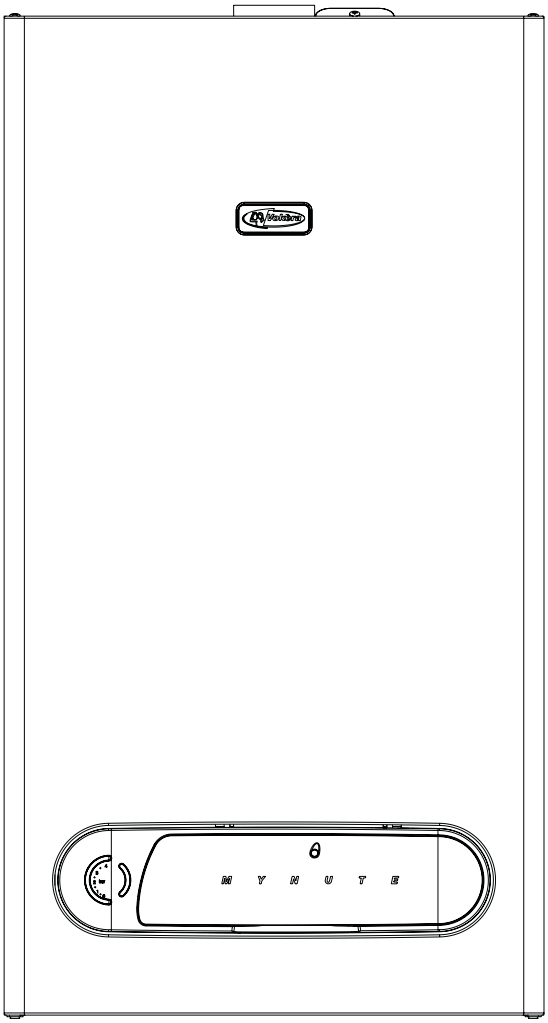


## Installation & Servicing Instructions

CE

**THESE INSTRUCTIONS TO BE RETAINED BY USER**

benchmark
COLLECTIVE MARK
THE MARK OF QUALITY FOR THE INSTALLATION, COMMISSIONING AND SERVICING OF DOMESTIC HEATING AND HOT WATER SYSTEMS

Vokèra is a licensed member of the Benchmark scheme which aims to improve the standards of installation and commissioning of domestic hot water systems in the UK.

# Contents


| Design principles & operating sequence | | Page |
|---|---|---|
| 1.1 | Principle components | 2 |
| 1.2 | Mode of operation | 2 |
| 1.3 | Safety devices | 2 |

| Technical data | | Page |
|---|---|---|
| 2.1 | Central heating | 3 |
| 2.2 | Gas pressure | 3 |
| 2.3 | Expansion vessel | 3 |
| 2.4 | Dimensions | 3 |
| 2.5 | Clearances | 3 |
| 2.6 | Connections | 3 |
| 2.7 | Electrical | 3 |
| 2.8 | Flue details | 3 |
| 2.9 | Efficiency | 3 |
| 2.10 | Emissions | 3 |
| 2.11 | Pump duty | 4 |

| General requirements (UK) | | Page |
|---|---|---|
| 3.1 | Related documents | 5 |
| 3.2 | Location of appliance | 5 |
| 3.3 | Gas supply | 5 |
| 3.4 | Flue system | 5 |
| 3.5 | Air supply | 6 |
| 3.6 | Water circulation | 6 |
| 3.7 | Electrical supply | 6 |
| 3.8 | Showers | 6 |
| 3.9 | Mounting on a combustible surface | 6 |
| 3.10 | Timber framed buildings | 6 |
| 3.11 | Inhibitors | 7 |

| General requirements (EIRE) | | Page |
|---|---|---|
| 3A.1 | Related documents | 7 |
| 3A.2 | Location of appliance | 7 |
| 3A.3 | Gas supply | 7 |
| 3A.4 | Flue system | 7 |
| 3A.5 | Air supply | 8 |
| 3A.6 | Water circulation | 8 |
| 3A.7 | Electrical supply | 8 |
| 3A.8 | Showers | 8 |
| 3A.9 | Mounting on a combustible surface | 8 |
| 3A.10 | Timber framed buildings | 8 |
| 3A.11 | Inhibitors | 8 |
| 3A.12 | Declaration of conformity | 8 |

| Installation | | Page |
|---|---|---|
| 4.1 | Delivery | 9 |
| 4.2 | Contents | 9 |
| 4.3 | Unpacking | 9 |
| 4.4 | Preparation for mounting the appliance | 9 |
| 4.5 | Fitting the flue | 9 |
| 4.6 | Connecting the gas & water | 13 |
| 4.7 | Electrical connections | 13 |

| Commissioning | | Page |
|---|---|---|
| 5.1 | Gas supply installation | 15 |
| 5.2 | The heating system | 15 |
| 5.3 | Initial filling of the system | 15 |
| 5.4 | Initial flushing of the system | 15 |
| 5.5 | Pre-operation checks | 15 |
| 5.6 | Initial lighting | 15 |
| 5.7 | Checking burner pressures | 15 |
| 5.8 | Final flushing of the heating system | 15 |
| 5.9 | Setting the boiler operating temperature | 15 |
| 5.10 | Setting the system design pressure | 15 |
| 5.11 | Regulating the central heating system | 15 |
| 5.12 | Final checks | 16 |
| 5.13 | Instructing the user | 16 |

| Servicing | | Page |
|---|---|---|
| 6.1 | General | 17 |
| 6.2 | Routine annual servicing | 17 |
| 6.3 | Replacement of components | 17 |
| 6.4 | Component removal procedure | 17 |

| Checks, adjustments and fault finding | | Page |
|---|---|---|
| 7.1 | Checking appliance operation | 18 |
| 7.2 | Appliance mode of operation | 18 |
| 7.3 | Checking and adjusting burner pressure | 18 |
| 7.4 | Combustion analysis test | 18 |
| 7.5 | Checking the expansion vessel | 19 |
| 7.6 | External faults | 19 |
| 7.7 | Electrical checks | 19 |
| 7.8 | Fault finding | 20 |

| Wiring diagrams | | Page |
|---|---|---|
| 8.1 | External wiring | 25 |
| 8.2 | Connection on external time-clock and room thermostat | 26 |
| 8.3 | Connecting of an integral time-clock | 26 |

| Exploded diagrams | | Page |
|---|---|---|
| 9.1 | Table 1 | 27 |
| 9.2 | Table 2 | 28 |
| 9.3 | Table 3 | 29 |
| 9.4 | Table 4 | 30 |
| 9.5 | Table 5 | 31 |

| L.P.G. instructions | | Page |
|---|---|---|
| 10.1 | Technical data | 32 |
| 10.2 | Related documents | 32 |
| 10.3 | Gas supply | 32 |
| 10.4 | Gas supply installation | 32 |
| 10.5 | Checking and adjusting burner pressure | 32 |

# INTRODUCTION

The Vokera Mynute 24m is a central heating boiler, which - by design- incorporates electronic ignition, circulating pump, expansion vessel, safety valve, pressure gauge and automatic by-pass.
It is produced as a room sealed, category II2H3+ appliance, suitable for wall mounting applications only. It is provided with a fan powered flue outlet with an annular coaxial combustion air intake that can be rotated - horizontally - through 360 degrees for various horizontal or vertical applications. The Mynute 24m can also be used with the Vokera twin flue system.
This appliance is designed for use with a sealed system only; consequently it is not intended for use on open vented systems.
The provision of stored hot water is possible by the addition of an indirect cylinder.

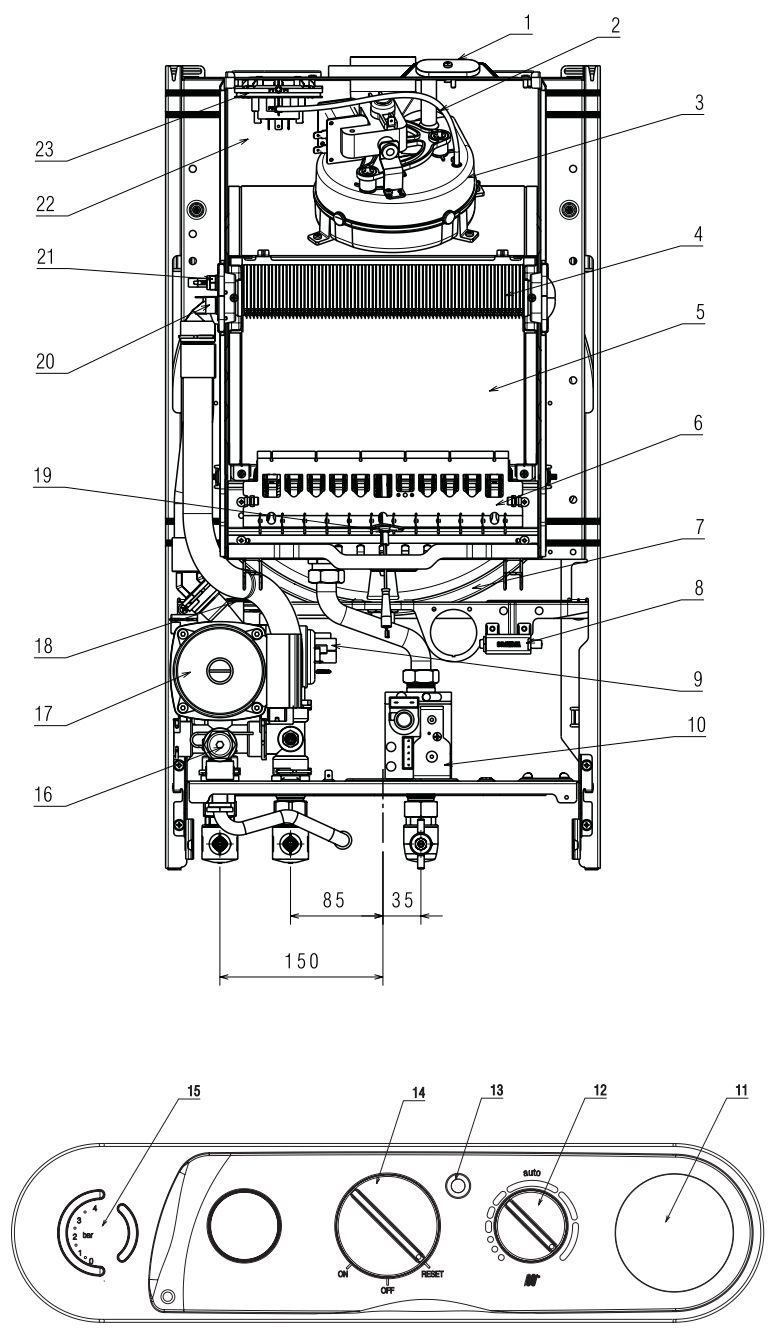


Fig. 1

**Fig.1 General Layout**

1 Flue Analysis Test Point
2 Pressure Tube Negative
3 Fan Assembly
4 Heat Exchanger
5 Combustion chamber
6 Burner
7 Expansion vessel
8 Transformer
9 Water pressure switch
10 Gas Valve
11 Time clock aperture (optional)
12 CH position
13 Fault indicator led
14 Mode selector switch
15 Pressure gauge
16 Safety valve
17 Pump
18 Auto air vent
19 Electrode
20 High limit thermistor
21 Primary thermistor
22 Air chamber (with cover removed)
23 Air pressure switch

## 1.1 PRINCIPLE COMPONENTS

- A fully integrated electronic control board featuring electronic temperature control, anti-cycle control, pump over-run, self-diagnostic fault indicator, continuous gas modulation
- Low-water content copper heat exchanger
- Electronic ignition with flame supervision
- Integral pump
- Fan
- Expension vessel
- Differential air pressure switch
- Water pressure switch
- Two-stage gas valve
- Pressure gauge
- Safety valve.

## 1.2 MODE OF OPERATION

When there is a request for heat and or hot water via the programmer/time clock and/or any external control, the pump and fan are started, the fan proves the differential air pressure switch which inturn allows an ignition sequence to begin. Ignition is sensed by the electronic circuitry to ensure flame stability at the burner. Once successful ignition has been achieved, the electronic circuitry increases the gas rate to 75% for a period of 15 minutes. Thereafter, the boiler's output will either be increase to maximum or modulate to suit the set requirement.

When the appliance reaches the desired temperature the burner will shut down and the boiler will perform a three-minute anti cycle (timer delay). When the request for heat and/or hot water has been satisfied the appliance pump and fan may continue to operate to dissipate any residual heat within the appliance.

## 1.3 SAFETY DEVICES

When the appliance is in use, safe operation is ensured by.

- a water pressure switch that monitors system water pressure and will de-activate the pump, fan, and burner should the system water pressure drop below the rated tolerance;
- a high limit thermostat that over-rides the temperature control circuit to prevent or interrupt the operation of the burner;
- a differential air pressure switch that checks the operation of the fan and flue thereby allowing safe operation of the burner;
- a safety valve which releases excess pressure from the primary circuit.

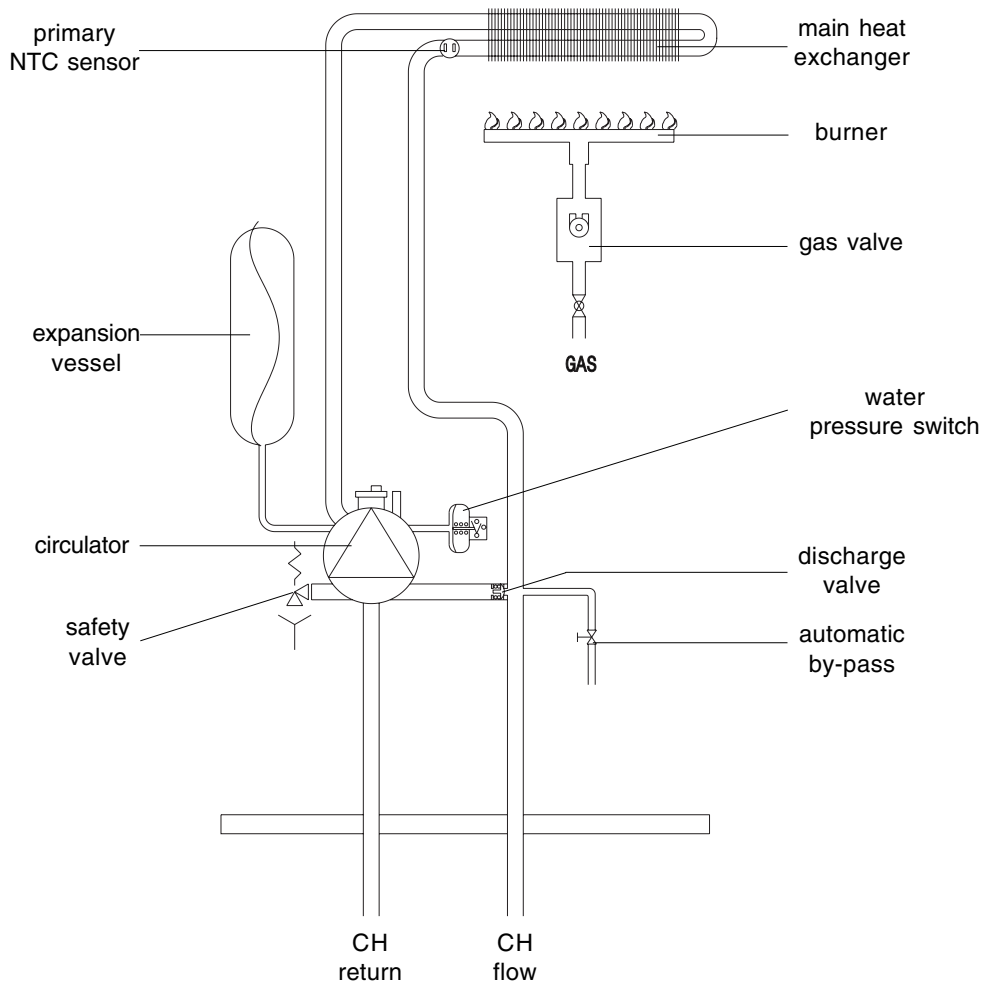


Fig. 2

# SECTION 2 TECHNICAL DATA

| | |
|---|---|
| **2.1 Central heating** | |
| Heat input (kW) | 26.3 |
| Heat output (maximum) kW | 24.0 |
| Heat output (minimum) kW | 9.4 |
| Minimum working pressure | 0,5 bar |
| Maximum working pressure | 3.0 bar |
| Minimum flow rate | 350 l/h |
| **2.2 Gas pressures** | |
| Inlet pressure G20 | 20.0 mbar |
| Maximum burner pressure | 10.1 mbar |
| Minimum burner pressure | 1.9 mbar |
| Gas rate (maximum) | 2.78 $Sm^3/h$ |
| Gas rate (minimum) | 1.18 $Sm^3/h$ |
| Injectors size | 12 x 1.35 mm |
| **2.3 Expansion vessel** | |
| Capacity | 8 litres |
| Maximum system volume | 76 litres |
| Pre-charge pressure | 1.0 bar |
| **2.4 Dimensions** | |
| Height | 740 mm |
| Width | 400 mm |
| Depth | 332 mm |
| Dry weight | 31 kg |
| **2.5 Clearances** | |
| Left side | 12 mm |
| Right side | 12 mm |
| Top | 150 mm from casing or 25 mm above flue elbow, whichever is applicable |
| Bottom | 150 mm |
| Front | 600 mm |
| **2.6 Connections** | |
| Flow & return | 22 mm |
| Gas | 15 mm |
| Safety valve | 15 mm |
| **2.7 Electrical** | |
| Voltage (V/hz) | 230/50 |
| Power consumption (W) | 125 |
| Internal fuse | 2 AL |
| External fuse | 3 A |
| **2.8 Flue details** | |
| Maximum horizontal flue length (concentric) | 4.25 m |
| Maximum vertical flue length (concentric) | 5.25 m |
| Maximum vertical flue length (horizontal or vertical) | 14m/14m + terminal |
| **2.9 Efficiency** | |
| SEDBUK band “D” | 80,13% |
| **2.10 Emissions** | |
| Nox (max-min) | 140-110 ppm |
| CO (max-min) | 100-130 ppm |
| $CO_2$ (max-min) | 6,95-2,60% |
| $CO/CO_2$ ratio (max) | 0,0014 to 1 |
| $CO/CO_2$ ratio (min) | 0,005 to 1 |

Ref. Condition 15 °C , 1013,25 mbar, dry gas
NOTE: L.P.G. data refer to section 10

## 2.11 PUMP DUTY

Fig. 3 shows the flow rate available - after allowing for pressure loss through the appliance - against system pressure loss. When using this graph apply only the pressure loss of the system. The graph is based on a 20 °C temperature differential.

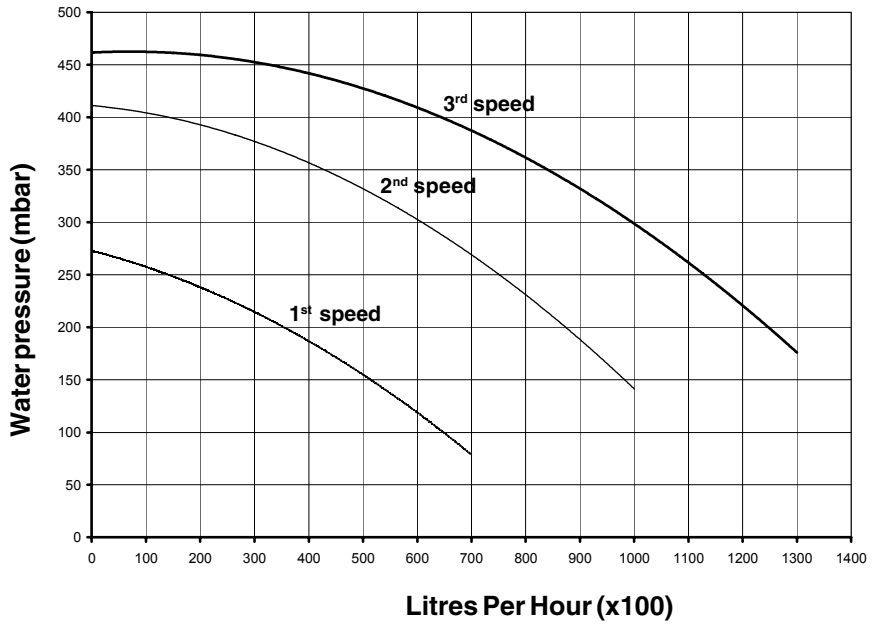


Fig. 3

## SECTION 3 GENERAL REQUIREMENTS (UK)

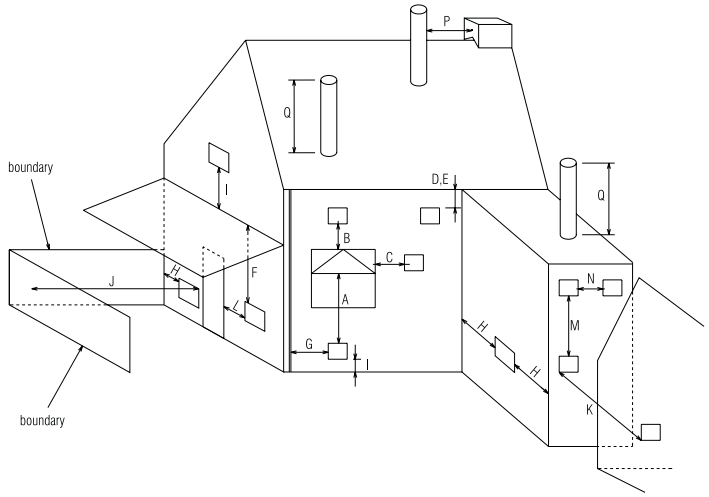


| Key | Location | Minimum distance |
|---|---|---|
| A | Below an opening (window, air-brick, etc.) | 300 mm |
| B | Above an opening (window, air-brick, etc.) | 300 mm |
| C | To the side of an opening (window, air-brick, etc.) | 300 mm |
| D | Below gutter, drain-pipe, etc. | 75 mm |
| E | Below eaves | 200 mm |
| F | Below balcony, car-port roof, etc. | 200 mm |
| G | To the side of a soil/drain-pipe, etc. | 150 mm |
| H | From internal/external corner or boundary | 300 mm |
| I | Above ground, roof, or balcony level | 300 mm |
| J | From a surface or boundary facing the terminal | 600 mm |
| K | From a terminal facing a terminal | 1200 mm |
| L | From an opening in the car-port into the building | 1200 mm |
| M | Vertically from a terminal on the same wall | 1500 mm |
| N | Horizontally from a terminal on the same wall | 300 mm |
| P | From a structure to the side of the vertical terminal | 300 mm |
| Q | From the top of the vertical terminal to the roof flashing | As determined by the fixed collar of the vertical terminal |

Fig. 4

This appliance must be installed by a competent person in accordance with the Gas Safety (Installation & Use) Regulations.

### 3.1 RELATED DOCUMENTS

The installation of this boiler must be in accordance with the relevant requirements of the Gas Safety (Installation & Use) Regulations, the local building regulations, the current I.E.E. wiring regulations, the bylaws of the local water undertaking, the Building Standards (Scotland) Regulation, and Building Standards (Northern Ireland) Regulations.

It should be in accordance also with any relevant requirements of the local authority and the relevant recommendations of the following British Standard Codes of Practice.

### 3.2 LOCATION OF APPLIANCE

The appliance may be installed in any room or internal space, although particular attention is drawn to the requirements of the current I.E.E. wiring regulations, and in Scotland, the electrical provisions of the Building Regulations, with respect to the installation of the appliance in a room or internal space containing a bath or shower.

### 3.3 GAS SUPPLY

The gas meter - as supplied by the gas supplier - must be checked to ensure that it is of adequate size to deal with the maximum rated input of all the appliances that it serves. Installation pipes must be fitted in accordance with BS 6891.

Pipe work from the meter to the appliance must be of adequate size. Pipes of a smaller size than the appliance gas inlet connection must not be used. The installation must be tested for soundness in accordance with BS6891.

If the gas supply serves more than one appliance, it must be ensured that an adequate supply is maintained to each appliance when they are in use at the same time.

### 3.4 FLUE SYSTEM

The terminal should be located where the dispersal of combustion products is not impeded and with due regard for the damage and discoloration that may occur to building products located nearby. The terminal must not be located in a place where it is likely to cause a nuisance (see fig. 4).

| | | |
|---|---|---|
| **BS 5440** | **PART 1** | **FLUES** |
| **BS 5440** | **PART 2** | **FLUES & VENTILATION** |
| **BS 5449** | **PART 1** | **FORCED CIRCULATION HOT WATER SYSTEMS** |
| **BS 5546** | | **INSTALLATION OF GAS HOT WATER SUPPLIES FOR DOMESTIC PURPOSES (2ND FAMILY GASES)** |
| **BS 6798** | | **INSTALLATION OF BOILERS OF RATED INPUT NOT EXCEEDING 60kW** |
| **BS 6891** | | **LOW PRESSURE INSTALLATION PIPES** |
| **BS 7074** | **PART 1** | **APPLICATION, SELECTION AND INSTALLATION OF EXPANSION VESSELS AND ANCILLARY EQUIPMENT FOR SEALED WATER SYSTEMS** |

When an appliance is installed in a room or internal space containing a bath or shower, the appliance or any control pertaining to it must not be within reach of a person using the bath or shower.

The location chosen for the appliance must permit the provision of a safe and satisfactory flue and termination. The location must also permit an adequate air supply for combustion purposes and an adequate space for servicing and air circulation around the appliance. Where the installation of the appliance will be in an unusual location special procedures may be necessary, BS 6798 gives detailed guidance on this aspect.

A compartment used to enclose the appliance must be designed and constructed specifically for this purpose. An existing compartment/cupboard may be utilised provided that it is modified to suit.

Details of essential features of compartment/cupboard design including airing cupboard installations are given in BS 6798. This appliance is not suitable for external installation.

In cold and/or humid weather, water vapour may condense on leaving the terminal; the effect of such pluming must be considered.

If installed less than 2m above a pavement or platform to which people have access (including balconies or flat roofs) the terminal must be protected by a guard of durable material. The guard must be fitted centrally over the terminal. Refer to BS 5440 Part 1, when the terminal is 0.5 metres (or less) below plastic guttering or 1 metre (or less) below painted eaves.

### 3.5 AIR SUPPLY

The following notes are intended for general guidance only.

This appliance is a room-sealed, fan-flued boiler, consequently it does not require a permanent air vent for combustion air supply.

When installed in a cupboard or compartment, ventilation for cooling purposes is also not required.

### 3.6 WATER CIRCULATION

Detailed recommendations are given in BS 5449 Part 1 and BS 6798. The following notes are for general guidance only.

#### 3.6.1 PIPEWORK

It is recommended that copper tubing to BS 2871 Part 1 is used in conjunction with soldered capillary joints.

Where possible pipes should have a gradient to ensure air is carried naturally to air release points and that water flows naturally to drain cocks.

Except where providing useful heat, pipes should be insulated to avoid heat loss and in particular to avoid the possibility of freezing. Particular attention should be paid to pipes passing through ventilated areas such as under floors, loft space, and void areas.

#### 3.6.2 AUTOMATIC BY-PASS

The appliance has a built-in automatic by-pass, consequently there is no requirement for an external by-pass, however the design of the system should be such that it prevents boiler "cycling" and is compliant with current Building Regulations.

#### 3.6.3 DRAIN COCKS

These must be located in accessible positions to facilitate draining of the appliance and all water pipes connected to the appliance. The drain cocks must be manufactured in accordance with BS 2879.

#### 3.6.4 AIR RELEASE POINTS

These must be positioned at the highest points in the system where air is likely to be trapped. They should be used to expel trapped air and allow complete filling of the system.

#### 3.6.5 EXPANSION VESSEL

The appliance has an integral expansion vessel to accommodate the increased volume of water when the system is heated. It can accept up to 8 litres of expansion from within the system, generally this is sufficient, however if the system has an unusually high water content, it may be necessary to provide additional expansion capacity (see 6.19).

#### 3.6.6 LOW PRESSURE SEALED SYSTEM

An alternative method of filling the system would be from an independent make-up vessel or tank mounted in a position at least 1-metre above the highest point in the system and at least 5-metres above the boiler (see fig. 5).

The cold feed from the make-up vessel or tank must be fitted with an approved non-return valve and stopcock for isolation purposes. The feed pipe should be connected to the return pipe as close to the boiler as possible.

#### 3.6.7 FREQUENT FILLING

Frequent filling or venting of the system may be indicative of a leak. Care should be taken during the installation of the appliance to ensure all aspects of the system are capable of withstanding pressures up to at least 3 bar.

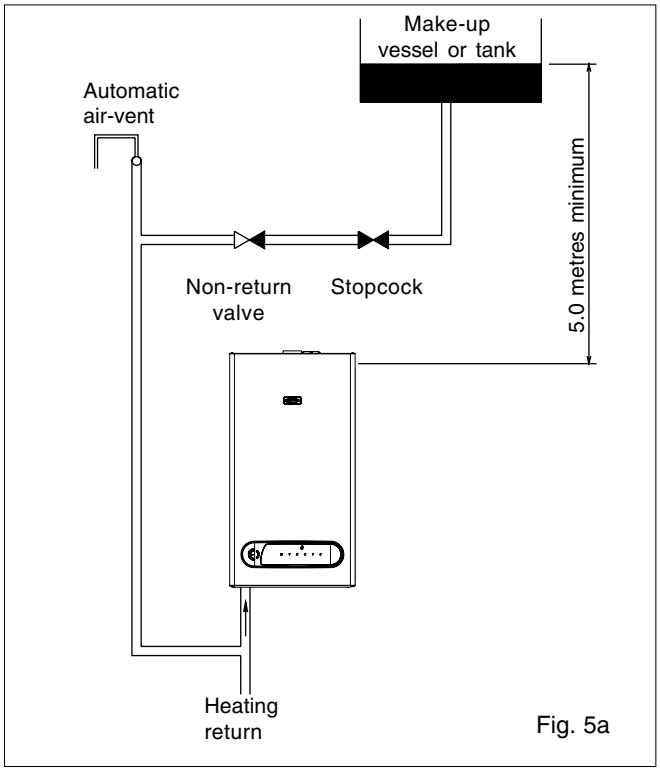

Fig. 5a

### 3.7 ELECTRICAL SUPPLY

The appliance is supplied for operation on 230V @ 50Hz electrical supply; it must be protected with a 3-amp fuse. The method of connection to the mains electricity supply must allow for complete isolation from the supply. The preferred method is by using a double pole switch with a contact separation of at least 3mm. The switch must only supply the appliance and its corresponding controls, i.e. time clock, room thermostat, etc. Alternatively an un-switched shuttered socket with a fused 3-pin plug both complying with BS 1363 is acceptable.

### 3.8 LOCATION

This appliance is suitable only for internal applications and therefore must not be installed externally to the property it serves.

### 3.9 MOUNTING ON A COMBUSTIBLE SURFACE

If the appliance is to be fitted on a wall of combustible material, a sheet of fireproof material must protect the wall.

### 3.10 TIMBER FRAMED BUILDINGS

If the appliance is to be fitted in a timber framed building, it should be fitted in accordance with the Institute of Gas Engineers publication (IGE UP/7) "Guide for Gas Installations in Timber Frame Buildings".

### 3.11 INHIBITORS

Vokera recommend that a inhibitor - suitable for use with copper heat exchangers - is used to protect the boiler and system from the effects of corrosion and/ or electrolytic action. The inhibitor must be administered in strict accordance with the manufacturers* instructions.

*Fernox and Sentinel manufacture products that have proved suitable for use with Vokera appliances. Vokera Ltd. cannot comment on the suitability of any other such product with our appliances.

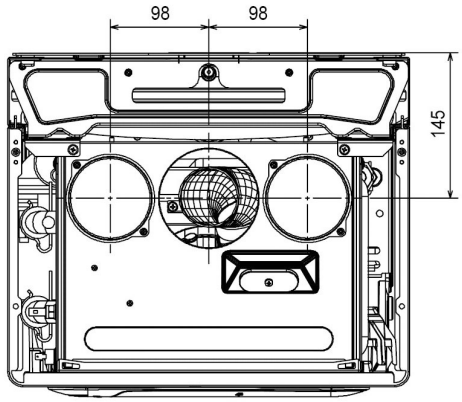


Fig. 6A

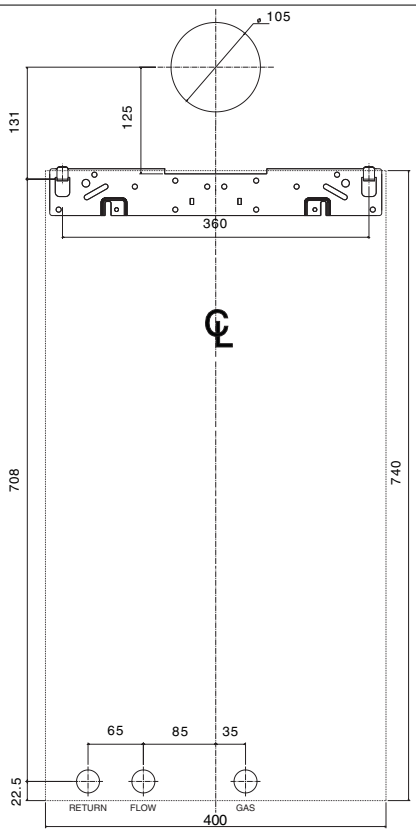


Fig. 6

## SECTION 3A GENERAL REQUIREMENTS (EIRE)

This appliance must be installed by a competent person in accordance with and defined by, the Standard Specification (Domestic Gas Installations) Declaration (I.S. 813).

### 3A.1 RELATED DOCUMENTS

The installation of this boiler must be in accordance with the relevant requirements of the local building regulations, the current ETCI National Rules for Electrical Installations and the bylaws of the local water undertaking.

It should be in accordance also with any relevant requirements of the local and/or district authority.

### 3A.2 LOCATION OF APPLIANCE

The appliance may be installed in any room or internal space, although particular attention is drawn to the requirements of the current ETCI National Rules for Electrical Installations, and I.S. 813, Annex K.

When an appliance is installed in a room or internal space containing a bath or shower, the appliance or any control pertaining to it must not be within reach of a person using the bath or shower.

The location chosen for the appliance must permit the provision of a safe and satisfactory flue and termination. The location must also permit an adequate air supply for combustion purposes and an adequate space for servicing and air circulation around the appliance. Where the installation of the appliance will be in an unusual location special procedures may be necessary, refer to I.S. 813 for detailed guidance on this aspect.

A compartment used to enclose the appliance must be designed and constructed specifically for this purpose. An existing compartment/cupboard may be utilised provided that it is modified to suit.

**This appliance is not suitable for external installation**.

### 3A.3 GAS SUPPLY

The gas meter - as supplied by the gas supplier - must be checked to ensure that it is of adequate size to deal with the maximum rated input of all the appliances that it serves. Installation pipes must be fitted in accordance with I.S. 813. Pipe work from the meter to the appliance must be of adequate sizee. Pipes of a smaller size than the appliance gas inlet connection must not be used. The installation must be tested for soundness in accordance with I.S. 813. If the gas supply serves more than one appliance, it must be ensured that an adequate supply is maintained to each appliance when they are in use at the same time.

### 3A.4 FLUE SYSTEM

The terminal should be located where the dispersal of combustion products is not impeded and with due regard for the damage and discoloration that may occur to building products located nearby. The terminal must not be located in a place where it is likely to cause a nuisance (see I.S. 813). In cold and/or humid weather, water vapour may condense on leaving the terminal; the effect of such pluming must be considered. If installed less than 2m above a pavement or platform to which people have access (including balconies or flat roofs) the terminal must be protected by a guard of durable material. The guard must be fitted centrally over the terminal. Refer to I.S. 813, when the terminal is 0.5 metres (or less) below plastic guttering or 1 metre (or less) below painted eaves.

### 3A.5 AIR SUPPLY

The following notes are intended for general guidance only.

This appliance is a room sealed, fan-flued boiler, consequently it does not require a permanent air vent for combustion air supply.

When installed in a cupboard or compartment, ventilation for cooling purposes is also not required.

### 3A.6 WATER CIRCULATION

Specific recommendations are given in I.S. 813. The following notes are for general guidance only.

### 3A.6.1 PIPEWORK

It is recommended that copper tubing be used in conjunction with soldered capillary joints.

Where possible pipes should have a gradient to ensure air is carried naturally to air release points and that water flows naturally to drain cocks.

Except where providing useful heat, pipes should be insulated to avoid heat loss and in particular to avoid the possibility of freezing. Particular attention should be paid to pipes passing through ventilated areas such as under floors, loft space and void areas.

### 3A.6.2 AUTOMATIC BY-PASS

The appliance has a built-in automatic by-pass, consequently there is no requirement for an external by-pass, however the design of the system should be such that it prevents boiler 'cycling'.

### 3A.6.3 DRAIN COCKS

These must be located in accessible positions to facilitate draining of the appliance and all water pipes connected to the appliance.

### 3A.6.4 AIR RELEASE POINTS

These must be positioned at the highest points in the system where air is likely to be trapped. They should be used to expel trapped air and allow complete filling of the system.

### 3A.6.5 EXPANSION VESSEL

The appliance has an integral expansion vessel to accommodate the increased volume of water when the system is heated. It can accept up to 8 litres of expansion from within the system, generally this is sufficient, however if the system has an unusually high water content, it may be necessary to provide additional expansion capacity (see 6.19).

### 3A.6.6 LOW PRESSURE SEALED SYSTEM

An alternative method of filling the system would be from an independent make-up vessel or tank mounted in a position at least 1-metre above the highest point in the system and at least 5-metres above the boiler (see fig. 5).

The cold feed from the make-up vessel or tank must be fitted with an approved non-return valve and stopcock for isolation purposes. The feed pipe should be connected to the return pipe as close to the boiler as possible.

### 3A.6.7 FREQUENT FILLING

Frequent filling or venting of the system may be indicative of a leak. Care should be taken during the installation of the appliance to ensure all aspects of the system are capable of withstanding pressures up to at least 3 bar.

### 3A.7 ELECTRICAL SUPPLY

The appliance is supplied for operation on 230V @ 50Hz electrical supply; it must be protected with a 3-amp fuse. The method of connection to the mains electricity supply must allow for complete isolation from the supply. The preferred method is by using a double-pole switch with a contact separation of at least 3mm. The switch must only supply the appliance and its corresponding controls, i.e. time clock, room thermostat, etc.

### 3A.8 LOCATION

This appliance is suitable only for internal applications and therefore must not be installed externally to the property it serves.

### 3A.9 MOUNTING ON A COMBUSTIBLE SURFACE

If the appliance is to be fitted on a wall of combustible material, a sheet of fireproof material must protect the wall.

### 3A.10 TIMBER FRAMED BUILDINGS

If the appliance is to be fitted in a timber framed building, it should be fitted in accordance with I.S. 813 and local Building Regulations.

The Institute of Gas Engineers publication (IGE/UP/7) "Guide for Gas Installations in Timber Frame Buildings" gives specific advice on this type of installation.

### 3A.11 INHIBITORS

Vokera recommend that a inhibitor - suitable for use with copper heat exchangers - is used to protect the boiler and system from the effects of corrosion and or electrolytic action. The inhibitor must be administered in strict accordance with the manufacturers* instructions.

*Fernox and Sentinel manufacture products that have proved suitable for use with Vokera appliances. Vokera Ltd. cannot comment on the suitability of any other such product with our appliances.

### 3A.12 DECLARATION OF CONFORMITY

A Declaration of Conformity (as defined in I.S. 813) must be provided on completion of the installation.

A copy of the declaration must be given to the responsible person and also to the gas supplier if required.

## 4.1 DELIVERY

Due to the weight of the appliance it may be necessary for two people to lift and attach the appliance to its mounting. The appliance is contained within a heavy-duty cardboard carton. Lay the carton on the floor with the writing the correct way up.

## 4.2 CONTENTS

Contained within the carton is:

- the boiler
- the wall bracket
- template
- an accessories pack containing appliance service connections and washers
- the instruction pack containing the installation & servicing instructions, user instructions, Benchmark logbook, guarantee registration card and a 3-amp fuse.

## 4.3 UNPACKING

At the top of the carton pull both sides open - do not use a knife - unfold the rest of the carton from around the appliance, carefully remove all protective packaging from the appliance and lay the accessories etc. to one side. Protective gloves should be used to lift the appliance, the appliance back-frame should be used for lifting points.

## 4.4 PREPARATION FOR MOUNTING THE APPLIANCE

The appliance should be mounted on a smooth, vertical, non-combustible surface, which must be capable of supporting the full weight of the appliance. Care should be exercised when determining the position of the appliance with respect to hidden obstructions such as pipes, cables, etc.

When the position of the appliance has been decided - using the template supplied - carefully mark the position of the wall-bracket (fig. 6) and flue-hole (if applicable).

## 4.5 FITTING THE FLUE

The top flue outlet permits both horizontal and vertical flue applications to be considered, alternatively, the Vokera twin flue system can be utilised if longer flue runs are required.

### 4.5.1 CONCENTRIC HORIZONTAL FLUE

(For concentric vertical flue, see 4.5.2).
(For twin flue applications, see 4.5.3).
This appliance can only be used with the standard 60/100mm Uni-flue concentric flue system or the Vokera parallel (twin) system.

**NOTE**

These instructions relate **only** to the standard 60/100mm concentric flue system. The appliance flue outlet elbow can be rotated through 360° on its vertical axis. In addition the flue may be extended from the outlet elbow in the horizontal plane (see 2.9). A reduction must also be made to the maximum length (see table) when additional bends are used.

**Reduction for additional bends**

| Bend | Reduction in maximum flue length for each bend |
|---|---|
| 45° bend | 0.5 metre |
| 90° bend | 0.85 metre |

**Horizontal flue terminals and accessories**

| Part No. | Description | Min-Max Length |
|---|---|---|
| 2359029 | Standardl flue kit<br>For use with add. bends and extensions | 833 mm<br>(dimension '**X**') |
| 2359119 | Telescopic flue kit.<br>For use with add. bends and extensions | |
| 2359069 | 750 mm extension | 750 mm |
| 2359079 | 1500 mm extension | 1500 mm |
| 2359089 | Telescopic extention | 350-490 mm |
| 2359049 | 45° bend (pair) | N/A |
| 2359059 | 90° bend | N/A |
| 0225760 | Wall bracket (5) | N/A |

Using the template provided, mark and drill a 105mm hole for the passage of the flue pipe. The hole should have a 1° drop from the boiler to outside, to eliminate the possibility of rainwater entering the appliance via the flue.

The fixing holes for the wall-mounting bracket should now be drilled and plugged, an appropriate type and quantity of fixing should be used to ensure that the bracket is mounted securely. Once the bracket has been secured to the wall, mount the appliance onto the bracket.

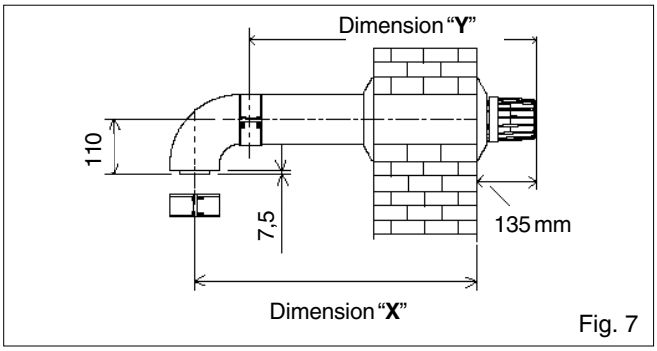

Fig. 7

#### 4.5.1.1 FITTING THE HORIZONTAL FLUE KIT (see 4.5.1)

Carefully measure the distance from the centre of the appliance flue outlet to the face of the outside wall (dimension "**X**" see fig. 7). Ensure the inner (60mm) pipe is fully inserted into the outer (100mm) pipe (when the inner pipe is fully inserted, it stands proud of the outer pipe by 7.5mm). Add 32mm to dimension "**X**" to give the overall flue length (dimension "**Y**").

**NOTE**

The standard horizontal flue kit (part no. 2359029) is suitable for a distance (dimension "**Y**") of up to 865mm.
The telescopic flue kit (part no. 2359119) is suitable for a distance (dimension "**Y**") of up to 600mm.
Dimension "**Y**" is measured from the end of the terminal to the end of the outer (100mm) pipe.

The internal trim should be fitted to the flue pipe before connection of the 90º bend.

If the horizontal flue kit (2359029) requires to be cut to the correct size (dimension "**Y**"), you must ensure that the inner (60mm) pipe stands proud of the outer (100mm) pipe by 7.5mm (fig. 8). Ensure any burrs are filed or removed and that any seals are located properly before assembly.

The telescopic flue terminal should be adjusted to the appropriate length and then fixed using the securing screw supplied.

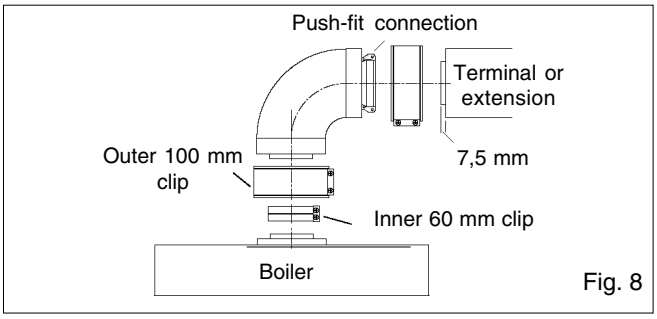

Fig. 8

### 4.5.1.2 STANDARD FLUE KIT (2359029)

Hold the inner (60mm) pipe of the terminal assembly and connect to the push-fit end of the 90º bend (supplied) using a twisting action. Insert the assembled flue into the previously drilled hole. Using the clips & screws supplied, connect the flue assembly to the boiler, ensuring that the terminal protrudes past the finished outside wall by the correct length (135mm).

### 4.5.1.3 TELESCOPIC FLUE KIT (2359119)

Connect the 60mm push-fit connection of the flue bend (supplied) to the telescopic flue assembly using a twisting action. Insert the assembled flue into the previously drilled hole. Using the clips & screws supplied, connect the flue assembly to the boiler, ensuring that the terminal protrudes past the finished outside wall by the correct length (135mm).

You must ensure that the entire flue system is properly supported and connected.

Seal the flue assembly to the wall using cement or a suitable alternative that provides satisfactory weatherproofing. The exterior trim can now be fitted.

### 4.5.1.4 EXTENDING THE HORIZONTAL FLUE

The horizontal flue system can be extended using bends and/or extensions from the Uni-Flue range (see 4.5.1).

Connect the bend - supplied with the terminal kit - to the top of the boiler using the clips, screws and gaskets supplied. The additional bends and extensions have an internal pushfit connection, care should be taken to ensure that the correct seal is made when assembling the flue system.

Connect the required number of flue extensions or bends (up to the maximum equivalent flue length) to the flue terminal using the clips, screws and gaskets supplied (fig. 8 & 8A).

The interior trim should be fitted at this point.

**NOTE**

When cutting an extension to the required length, you must ensure that the excess is cut from the plain end of the extension and that the inner (60mm) pipe is 7.5mm longer than outer (100mm) pipe (fig. 8 & 8A). Remove any burrs and check that any seals are located properly.

You must ensure that the entire flue system is properly supported and connected.

Seal the flue assembly to the wall using cement or a suitable alternative that will provide satisfactory weatherproofing.

The exterior trim can now be fitted.

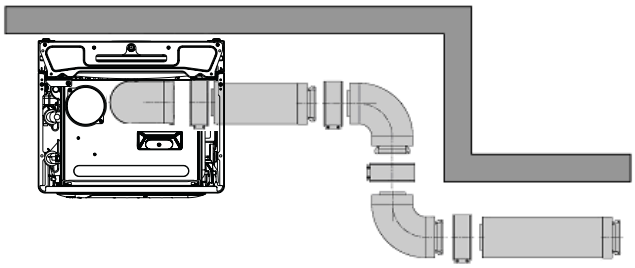
Fig. 8a

### 4.5.2 CONCENTRIC VERTICAL FLUE

The appliance can be used with either the standard 60/100mm concentric flue system or the optional 80/125mm concentric flue system.

**NOTE**

These instructions relate **only** to the standard 60/100mm concentric flue system. The vertical flue terminal can be connected directly to the appliance flue outlet. Alternatively, an extension or bend can be connected to the appliance flue outlet if desired (see 4.4.2), however if additional bends are fitted, a reduction must be made to the maximum flue length (see table below).

**Reduction for additional bends**

| Bend | Reduction in maximum flue length for each bend |
|---|---|
| 45º bend | 0.5 metre |
| 90º bend | 1.0 metre |

**Vertical flue terminal and accessories**

| Part No. | Description | Min-Max Length |
|---|---|---|
| 2359039 | Vertical flue terminal | 1500 mm |
| 0225770 | Pitched roof flashing plate | N/A |
| 0225765 | Flat roof flashing plate | N/A |
| 2359069 | 750 extension | 750 mm |
| 2359079 | 1500 extension | 1500 mm |
| 2359049 | 45º bend (pair) | N/A |
| 2359059 | 90º bend | N/A |
| 0225760 | Wall bracket (5) | N/A |

Using the dimensions given in fig. 9 as a reference, mark and cut a 105mm hole in the ceiling and/or roof.

Fit the appropriate flashing plate to the roof and insert the vertical flue terminal through the flashing plate from the outside, ensuring that the collar on the flue terminal fits over the flashing.

The fixing holes for the wall-mounting bracket

should now be drilled and plugged, an appropriate type and quantity of fixing should be used to ensure that the bracket is mounted securely. Once the bracket has been secured to the wall, mount the appliance onto the bracket.

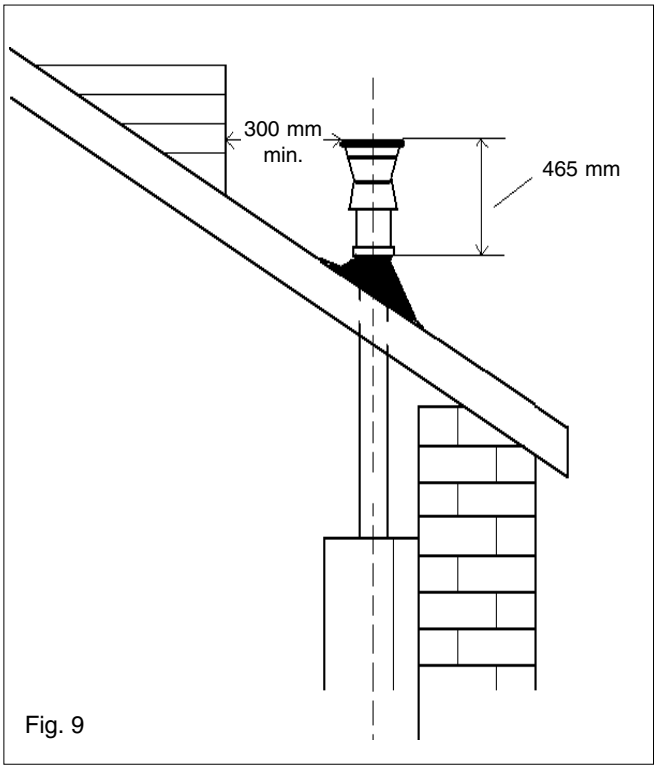

Fig. 9

**IMPORTANT**

The vertical flue terminal is 1.0 metre in length and cannot be cut; therefore it may be necessary to adjust the height of the appliance to suit or use a suitable extension.

Connect the vertical flue assembly to the boiler flue spigot using the 60mm & 100mm clips, gaskets and screws (supplied), ensuring the correct seal is made. The flue support bracket (supplied with the vertical flue kit) can now be fitted.

If the vertical flue requires extension/s or additional bend/s, connect the required number of flue extensions or bends (up to the maximum equivalent flue length) between the boiler and vertical flue assembly (fig. 8).

**NOTE**

When cutting an extension to the required length, you must ensure that the excess is cut from the plain end of the extension and that the inner (60mm) pipe is 7.5mm longer than outer (100mm) pipe (fig. 8). Remove any burrs and check that any seals are located properly.

You must ensure that the entire flue system is properly supported and connected.

### 4.5.3 TWIN FLUE SYSTEM

The Vokera twin flue system enables greater flue distances to be achieved (see 4.4.2) than that of a concentric flue system. It can be used for horizontal or vertical applications, however the twin flue system must be converted to the dedicated concentric flue kit for termination. It is essential that the installation of the twin flue system be carried out in strict accordance with these instructions.

**GUIDANCE NOTES ON TWIN FLUE INSTALLATION**

- the flue must have a fall back of 1° back to the appliance to allow any condensate that may form in the flue system to drain via the condensate drain. Consideration must also be given to the fact that there is the possibility of a small amount of condensate dripping from the terminal
- ensure that the entire flue system is adequately supported, use at least one bracket for each extension
- the entire flue system must be adequately insulated to maintain heat within the flue system thereby reducing the possibility of condensate production
- as the exhaust outlet pipe can reach very high temperatures it must be protected to prevent persons touching the hot surface
- the condensate drain pipe must be connected in accordance with current Building Regulations or other such rules in force.

**Reduction for additional bends**

| Bend | Reduction in maximum flue length for each bend |
|---|---|
| 45° bend | 1.0 metre |
| 90° bend | 1.0 metre |

**Twin flue accessories**

| Part No. | Description | Length |
|---|---|---|
| 0225805 | Horizontal flue terminal | 1000 mm |
| 0225810 | Vertical flue terminal | 1000 mm |
| 300 | Twin adapter kit | N/A |
| 0225770 | Pitched roof flashing plate | N/A |
| 0225765 | Flat roof flashing plate | N/A |
| 0225815 | Condensate drain kit | N/A |
| 0225820 | 0.25 m extension (pair) | 250 mm |
| 0225825 | 0.5 m extension (pair) | 500 mm |
| 0225830 | 1.0 m extension (pair) | 1000 mm |
| 0225835 | 2.0 m extension (pair) | 2000 mm |
| 0225840 | 45° bend (pair) | N/A |
| 0225845 | 90° bend (pair) | N/A |
| 0225850 | Twin bracket (5) | N/A |
| 0225855 | Single bracket (5) | N/A |

**MOUNTING THE BOILER**

The fixing holes for the wall-mounting bracket should now be drilled and plugged, an appropriate type and quantity of fixing should be used to ensure that the bracket is mounted securely. Once the bracket has been secured to the wall, mount the appliance onto the bracket.

#### 4.5.3.1 INSTALLATION OF TWIN ADAPTOR KIT (fig. 10)

- Insert the exhaust connection manifold onto the appliance flue outlet.
- Place the silicone seal (supplied with twin adapter kit) over the rim of the exhaust connection manifold.
- Remove the required blanking plate (located to the left and right of the appliance flue outlet) and - using the same screws - install the air baffle.
- Using the hole in the exhaust connection manifold as a guide, drill a 3mm hole in the appliance flue spigot and secure the exhaust manifold connection to the flue spigot using the screw provided.

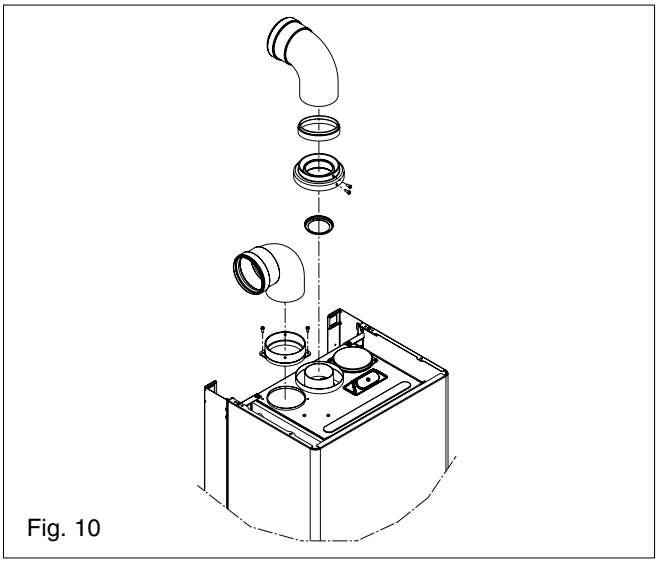

Fig. 10

#### 4.5.3.2 INSTALLATION OF CONDENSATE DRAIN KIT (fig. 11)

The condensate drain kit must be fitted within 1 metre of the appliance flue outlet. It is recommended that the condensate drain kit should be fitted in the vertical plane, however it can be fitted horizontally with care.

- Fit the first bend to the condensate drain kit or exhaust connection manifold by firmly pushing in to position.
- Using the two holes in the exhaust connection manifold as a guide, drill a 3mm hole in each and secure using the screws provided.
- Connect the air inlet pipe to the air baffle as above.
- Prime the condensate trap with clean water prior to commissioning the appliance.
- The twin flue pipes extensions and accessories can now be installed by pushing together (the plain end of each extension or bend should be pushed approximately 50mm into the female socket of the previous piece).

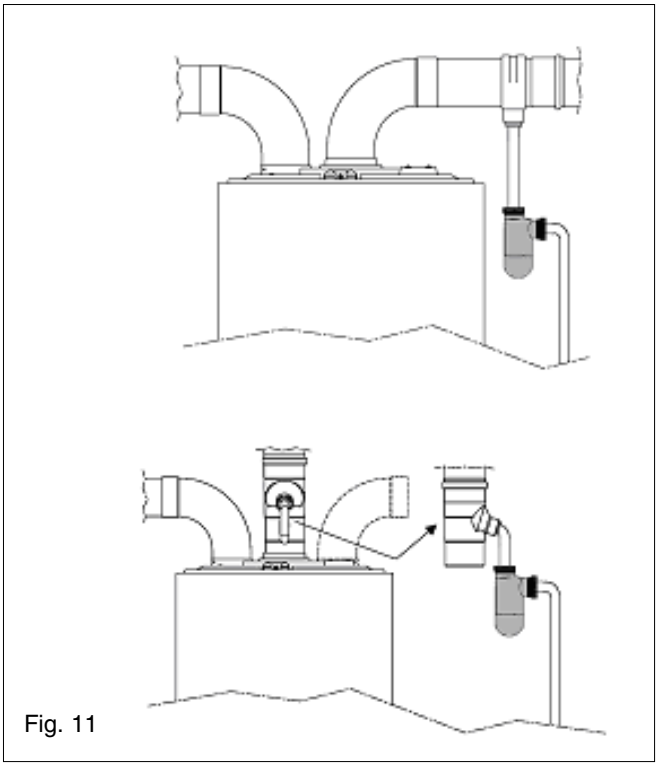

Fig. 11

#### 4.5.3.3 HORIZONTAL TERMINATION (fig. 12)

The twin flue system must be converted to the dedicated concentric flue kit for termination.

- The horizontal terminal is supplied with a built-in converter box and cannot be shortened.
- A 130mm hole is required for the passage of the concentric terminal through the wall.
- The air inlet pipe must always be level with or below, that of the exhaust pipe.

Depending on site conditions it may be preferable to install the terminal assembly prior to fitting the twin flue pipes. Mark and drill a 130mm hole for the passage of the horizontal flue terminal, ensuring that there is a fall of at least 1° back to the boiler (17mm per 1000mm). Insert the terminal assembly into the flue hole. Push-fit the twin flue pipes onto the concentric to twin converter box ensuring that the exhaust pipe connects to the exhaust connection on the concentric to twin converter. If necessary cut the plain ends (male) of the twin flue pipes to allow connection to the concentric to twin converter.

**NOTE**

- Before cutting twin flue pipes ensure allowances have been made for connection onto the previous piece and onto the concentric to twin converter.
- The last twin flue pipes must be pushed 50mm onto the male spigots of the concentric to twin converter.
- You must ensure that the entire flue system is properly supported and connected. Seal the flue terminal assembly to the wall using cement or a suitable alternative that will provide satisfactory weatherproofing. The interior and exterior trim can now be fitted.

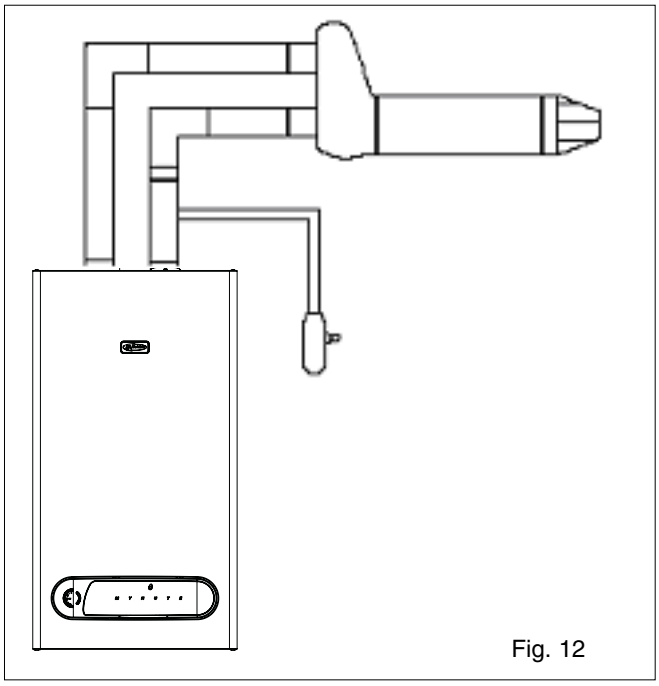

Fig. 12

#### 4.5.3.4 VERTICAL TERMINATION (fig. 13)

The twin flue system must be converted to the dedicated concentric flue kit for termination.

- The vertical terminal is supplied with a built-in converter box and cannot be shortened.

- A 130mm hole is required for the passage of the concentric terminal through the ceiling and/or roof.

Depending on site conditions it may be preferable to install the terminal assembly prior to fitting the twin flue pipes. Fit the appropriate flashing plate to the roof and insert the vertical flue terminal through the flashing plate from the outside, ensuring that the collar on the flue terminal fits over the flashing. Push-fit the twin flue pipes onto the concentric to twin converter ensuring that the exhaust pipe connects to the exhaust connection on the concentric to twin converter. If necessary cut the plain ends (male) of the twin flue pipes to allow connection to the concentric to twin converter.

**NOTE**

- Before cutting twin flue pipes ensure allowances have been made for connection onto the previous piece and onto the concentric to twin converter. The last twin flue pipes must be pushed 50mm onto the male spigots of the concentric to twin converter.
- You must ensure that the entire flue system is properly supported and connected.
- Ensure that any horizontal sections of pipe have a 1° fall towards the appliance (17mm per 1000mm).

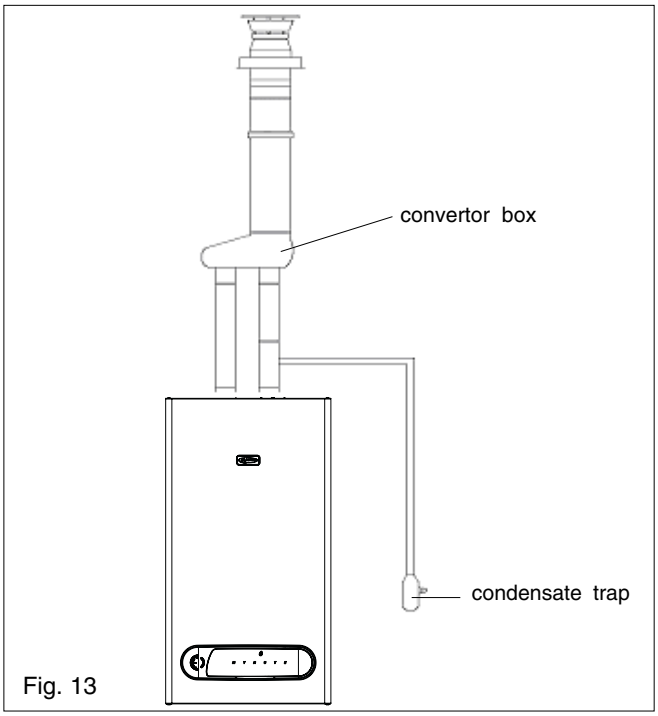

Fig. 13

## 4.6 CONNECTING THE GAS AND WATER

The appliance is supplied with an accessories pack that contains sealing washers and service valves. The service valves are of the compression type. When connecting pipe work to the valves, tighten the compression end first then insert the sealing washers before tightening the valve to the appliance.

**NOTE**

It will be necessary to hold the valve with one spanner whilst tightening with another.

### 4.6.1 GAS (fig. 6)

The appliance is supplied with a 15 mm service valve, connect a 15 mm pipe to the inlet of the valve, and tighten both nuts.

**NOTE**

It will be necessary to calculate the diameter of the gas pipe to ensure the appliance has an adequate supply of gas.

### 4.6.2 FLOW & RETURN (fig. 6)

The appliance is supplied with 22 mm service valves for the flow and return connections, connect a 22 mm pipe to the inlet of each valve and tighten both nuts.

### 4.6.3 SAFETY VALVE (fig. 6)

Connect the safety valve discharge pipe to the safety valve outlet and tighten. The discharge pipe must have a continuous fall away from the appliance to outside and allow any water to drain away thereby eliminating the possibility of freezing. The discharge pipe must terminate in a position where any water - possibly boiling - discharges safely without causing damage or injury, but is still visible.

## 4.7 ELECTRICAL CONNECTIONS

The electrical supply must be as specified in 3.7/ 3.7a. The appliance is supplied, pre-wired with a 1.0 metre length of flex, connect the wires as follows:

- connect the Brown wire to the L (Live) terminal of the plug or fused isolator;
- connect the Blue wire to the N (Neutral) terminal of the plug or fused isolator;
- connect the Green/Yellow wire to the E (Earth) terminal of the plug or isolator;
- ensure the plug or fused isolator is fitted with a 3AMP fuse.

If this method of connection is unsuitable, please refer to section 8. A qualified electrician should connect the electrical supply to the appliance. If controls - external to the appliance - are required, a competent person must undertake the design of any external electrical circuits, please refer to Section 8 for detailed instructions. ANY EXTERNAL CONTROL OR WIRING MUST BE SERVED FROM THE SAME ISOLATOR AS THAT OF THE APPLIANCE. The supply cable from the isolator to the appliance must be 3-core flexible sized 0.75mm to BS 6500. Wiring to the appliance must be rated for operation in contact with surfaces up to 90ºC.

### 4.7.1 CASING REMOVAL

To gain access to the appliance electrical connections you must first remove the casing, proceed as follows:

- locate and remove the 3 screws that secure the outer casing to the appliance (fig 14);
- gently pull the right-hand side of the casing then the left-hand to disengage it from the retaining clips;
- lift the casing upward to disengage it from the top locating hooks and then remove;
- store the casing and screws safely until required. Re-fit in the reverse order.

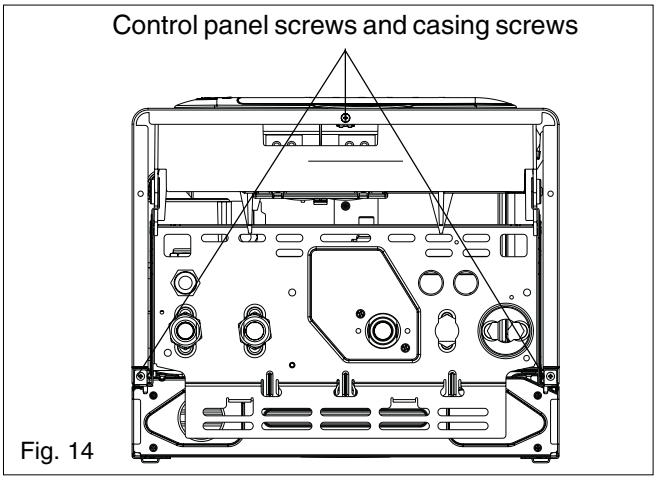

Fig. 14

### 4.7.2 ELECTRICAL CONNECTION

The appliance terminal strip is located behind the control fascia (fig. 15). Locate and remove the 4 screws securing the control PCB cover.

**NOTE**

The appliance comes with a factory fitted link to allow basic operation of the boiler via the selector switch. If external controls are required please refer to the wiring diagrams in section 8 for more detailed information.

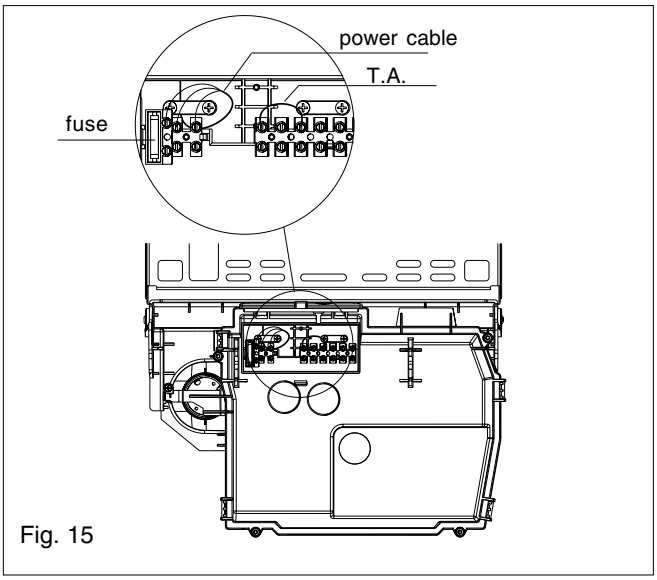

Fig. 15

### 4.7.3 CONNECTING THE MAINS (230V) INPUT (fig. 17)

Remove the control PCB cover as described in 4.7.2. Pass the cable through the cable anchorage (fig. 6). Connect the supply cable wires (earth, live and neutral) to their corresponding terminals on the terminal strip. Ensure that the EARTH wire is left slightly longer that the others, this will prevent strain on the Earth wire should the cable become taut.

Do not remove the “link wire”(fig. 17) unless additional external controls are to be fitted (see section 8). Re-fit the electrical input board cover. The securing screw on the cable anchorage should now be tightened. This must be done before the control fascia is re-fitted in.

**NOTE**

This appliance requires a permanent live supply.

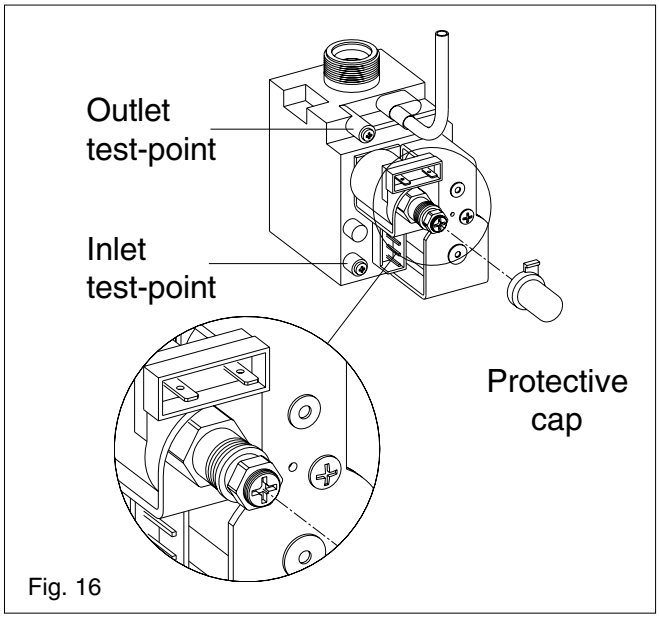

Fig. 16

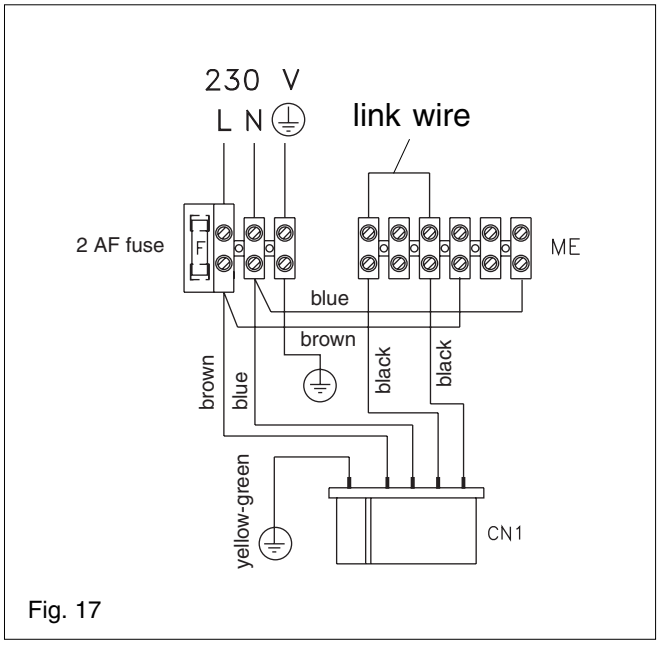

Fig. 17

**5.1 GAS SUPPLY INSTALLATION**

Inspect the entire installation including the gas meter, test for soundness and purge. Refer to BS 6891 for specific instruction.

**5.2 THE HEATING SYSTEM**

The appliance contains components that may become damaged or rendered inoperable by oils and/or debris that are residual from the installation of the system, consequently it is essential that the system be flushed in accordance with the following instructions.

**5.3 INITIAL FILLING OF THE SYSTEM**

Ensure both flow and return service valves are open, remove appliance casing as described in 4.7.1, identify the automatic air release valve and loosen the dust cap by turning cap anticlockwise one full turn. IMPORTANT, THERE ARE NO MANUAL AIR RELEASE VALVES LOCATED ON THE APPLIANCE. Ensure all manual air release valves located on the heating system are closed. Using the method of filling as described in fig. 5, slowly proceed to fill the system. As water enters the system the pressure gauge will begin to rise, Once the gauge has reached 1 bar close the filling valve and begin venting all manual air release valves, starting at the lowest first. It may be necessary to go back and top-up the pressure until the entire system has been filled. Inspect the system for water soundness, rectifying any leaks.

**5.4 INITIAL FLUSHING**

The whole of the heating system must be flushed as detailed in 5.8. Open all radiator or heating valves and the appliance flow and return service valves. Drain the boiler and system from the lowest points. Open the drain valve full bore to remove any installation debris from the boiler prior to lighting. Refill the boiler and heating system as described in 5.3.

**5.5 PRE-OPERATION CHECKS**

Before attempting the initial lighting of the appliance, the following checks must be carried out:

- ensure all gas service valves from the meter to the appliance are open and the supply pipe has been properly purged;
- ensure the proper electrical checks have been carried out (section 7.7), particularly continuity, polarity and resistance to earth;
- ensure the 3-amp fuse - supplied with the appliance - has been fitted;
- ensure the system has been filled, vented and the pressure set to 1bar;
- ensure the flue system has been fitted properly and in accordance with the instructions;
- ensure all appliance service valves are open.

**5.6 INITIAL LIGHTING**

Ensure the electrical supply to the appliance is switched on. Switch the time clock or programmer (if fitted) to an “on” position and ensure all external controls are also calling for heat.

Turn the mode selector knob to be “on” position (fig. 1). The appliance will now go through an ignition sequence as described in 1.2. Should the appliance fail to ignite, refer to section 5.5 and/or section 7 (fault finding).

**5.7 CHECKING BURNER PRESSURES**

Although the burner pressure is factory set, it is necessary to check it during the commissioning. Isolate the appliance from the electrical supply and attach a suitable manometer to the gas valve outlet test nipple (fig. 17). Light the boiler as described in 5.6 and compare the reasging on the manometer with the value described in 2.2. If adjustment is required, follow the detailed instructions in section 7 (7.3). Once the burner pressure has been checked, isolate the appliance from the electrical supply, remove the manometer and tighten the gas valve outlet test nipple.

**5.8 FINAL FLUSHING OF THE HEATING SYSTEM**

The system shall be flushed in accordance with BS 7593. If a cleanser is to be used, it shall be from a reputable manufacturer* and shall be administered in strict accordance with the manufacturers instructions.

*Both Sentinel and Fernox manufacture products that have proved suitable for use with Vokera appliances. Vokera Ltd. cannot comment on the suitability of any other such product with our appliance.

**5.8.1 INHIBITORS**

See 3.8.

**5.9 SETTING THE BOILER OPERATING TEMPERATURE**

The flow outlet temperature can be adjusted between 40°C - 80°C via the thermostat knob (fig.1).

**5.10 SETTING THE SYSTEM DESIGN PRESSURE**

The design pressure should be a minimum of 1 bar and a maximum of 1.5 bar.

The actual reading should ideally be 1 bar plus the equivalent height in metres (0.1 BAR = 1 metre) to the highest point in the system above the base of the appliance (up to the maximum of 1.5 BAR total).

N.B. The safety valve is set to lift at 3 BAR/ 30metres/ 45psig.

To lower the system pressure to the required value, pull lever on head of safety valve to release water until the required figure registers on the pressure gauge (fig.1).

**5.11 REGULATING THE CENTRAL HEATING SYSTEM**

Fully open all radiator and circuit valves and run the appliance for both heating and hot water until heated water is circulating. If conditions are warm remove any thermostatic valve heads. Adjust radiator return valves and any branch circuit return valves until the individual return temperatures are correct and are approximately equal.

## 5.12 FINAL CHECKS

- ENSURE ALL TEST NIPPLES ON THE APPLIANCE GAS VALVE HAVE BEEN TIGHTENED AND CHECKED FOR SOUNDNESS
- ENSURE THE APPLIANCE FLUE SYSTEM IS FITTED CORRECTLY AND IS PROPERLY SECURED
- ENSURE ALL PIPE WORK IS RE-CHECKED FOR SOUNDNESS
- RE-FIT APPLIANCE CASING.

## 5.13 INSTRUCTING THE USER

Hand over all documentation supplied with this appliance - including these instructions - and explain the importance of keeping them in a safe place.

Explain to the user how to isolate the appliance from the gas, water and electricity supplies, and the locations of all drain points.

Show the user how to operate the appliance and its associated controls correctly.

Show the user the location of the filling valve and how to top-up the system pressure correctly and show the location of all manual air release points.

Explain to the user how to turn off the appliance for both long and short periods, and advise on the necessary precautions to prevent frost damage.

Explain to the user that for continued safe and efficient operation, the appliance must be serviced annually by a competent person.

## 6.1 GENERAL

To ensure the continued safe and efficient operation of the appliance, it is recommended that it is checked and serviced at regular intervals.

The frequency of servicing will depend upon the particular installation conditions but, in general, once per year should be adequate.

It is the law that any servicing work is carried out by competent person such as Vokera engineer, an approved service agent, British Gas or other CORGI registered personnel or other suitably qualified personnel.

The following instructions apply to the appliance and its controls, but it should be remembered that the central heating and the domestic hot water systems will also require attention from time to time.

## 6.2 ROUTINE ANNUAL SERVICING

- Check the operation of the appliance and ensure it functions as described in section 7. Compare the performance of the appliance with its design specification. The cause of any noticeable deterioration should be identified and rectified without delay.
- Thoroughly inspect the appliance for signs of damage or deterioration especially the flue system and the electrical apparatus.
- Check and adjust - if necessary - all burner pressure settings (see section 7.3).
- Check and adjust - if necessary - the system design pressure (see section 5.10).
- Carry out an analysis of the flue gases (see section 7.4) and visually check the condition of the entire flue assembly. Compare the results with the appliance design specification. Any deterioration in performance must be identified and rectified without delay.
- Ensure both flue venturis are clean and free from any debris or obstruction.
- Ensure both the burner and heat exchanger are clean and free from any debris or obstruction.
- Inspect all joints for signs of leakage and repair if necessary.
- Refer to the commissioning section and/or replacement of parts section for detailed instruction if required.

## 6.3 REPLACEMENT OF COMPONENTS

Although it is anticipated that this appliance will give years of reliable, trouble free service, the life span of components will be determined by factors such as operating conditions and usage. Should the appliance develop a fault, the fault finding section will assist in determining which component is malfunctioning.

## 6.4 COMPONENT REMOVAL PROCEDURE

To remove a component, access to the interior of the appliance is essential. Isolate the appliance from the electrical supply and remove the fuse. And when necessary, close all service valves on the appliance, remove the appliance casing as described in section 4.7.1, drain the water content from the appliance via the safety valve. Ensure some water absorbent cloths are available to catch any residual water that may drip from the appliance or removed component. Undertake a complete commissioning check as detailed in section 5, after replacing any component. **ALWAYS TEST FOR GAS SOUNDNESS IF ANY GAS CARRYING COMPONENTS HAVE BEEN REMOVED OR DISTURBED.**

## 7.1 CHECKING APPLIANCE OPERATION

When carrying out any repairs or servicing to the appliance, the relevant commissioning procedure must be undertaken to ensure the continued safe operation of the appliance. Particular attention should be made to ensure gas soundness, water soundness and the electrical integrity of the appliance.

## 7.2 APPLIANCE MODE OF OPERATION

When there is a request for heat and/or hot water via the programmer/time clock and/or any external control, the pump and fan are started.

**NOTE**

There must be sufficient system water pressure (min. 0.5 BAR) to ensure the water pressure switch is activated. If there is insufficient system pressure the pump and fan will be prevented from operating. When the fan runs, it proves the differential air pressure switch which in-turn allows an ignition sequence to begin.

**NOTE**

The ignition sequence lasts approximately 5 seconds, during which the appliance will continue to spark even if the burner has already lit. If the spark/sensing electrode does not sense ignition the appliance will then go to lockout. Ignition is sensed by the electronic circuitry to ensure flame stability at the burner. Once successful ignition has been achieved, the electronic circuitry allows 75% 0f the full gas rate through the appliance. After 15 minutes the gas rate is increased to maximum (100%). When the appliance reaches the desired temperature the burner will shut down and the boiler will perform a three-minute anti-cycle (timer delay).

**NOTE**

The timer delay can be de-activated by the insertion of a “jumper” on the PCB or by isolating the appliance from the electrical supply for 30 seconds. When the request for heat and/or hot water has been satisfied, the appliance pump and/or fan, may continue to circulate to dissipate any residual heat within the appliance.

## 7.3 CHECKING AND ADJUSTING BURNER PRESSURE (fig. 17)

Although the burner pressure is factory set, it is necessary to check it during servicing or if the gas valve has been removed. Isolate the appliance from the electrical supply and attach a suitable manometer to the gas valve outlet test nipple. Remove the compensator tube.

### 7.3.1 SETTING THE MAXIMUM BURNER PRESSURE

Light the boiler as described in 5.6 and compare the reading on the manometer with the value described in 2.2. If adjustment is required, remove the protective cap from the gas valve modulating coil assembly and turn the outer (10mm) nut clockwise to increase, or counter-clockwise to decrease the burner pressure.

**NOTE**

You should ensure that all radiators or heat emitters are fully open during the above procedure. This will ensure that the output of the boiler (burner pressure) is not compromised due to a high flow temperature.

### 7.3.2 SETTING THE MINIMUM BURNER PRESSURE

Once the maximum burner pressure has been checked and/or adjusted, remove one of the grey wires from the modulating coil. Compare the reading on the manometer with the value described in 2.2. If adjustment is required, turn the inner (red) cross-head screw clockwise to increase, or counter-clockwise to decrease the burner pressure, whilst ensuring that the outer (10mm) nut does not move.

When checking and/or adjustment has been completed, isolate the appliance from the electrical supply, replace the protective cap, refit the compensator tube, refit the grey wire to the modulating coil, remove the manometer and tighten the outlet test nipple.

**IMPORTANT**

**A GAS SOUNDNESS CHECK MUST BE CARRIED OUT.**

## 7.4 COMBUSTION ANALYSIS TEST

A combustion analysis check can easily be carried out on the appliance via the test points located on the top of the appliance, however you must check that the burner pressures are set correctly (see section 7.3).

- Insert the flue gas analyser probe into the right hand test point (see fig 25).
- Locate and remove the protective cap that conceals the “CO mode” button (see fig. 25A).
- Light the boiler as described in 5.6 and press the “CO mode” button once.
- The boiler will now enter the combustion analysis mode (CO mode) for a period of 15 minutes. During this time it will remain on full gas and ‘CO’ will be displayed on the LED display.
- Once the flue gas analysis has been made, press the “CO mode” to resume normal operation.

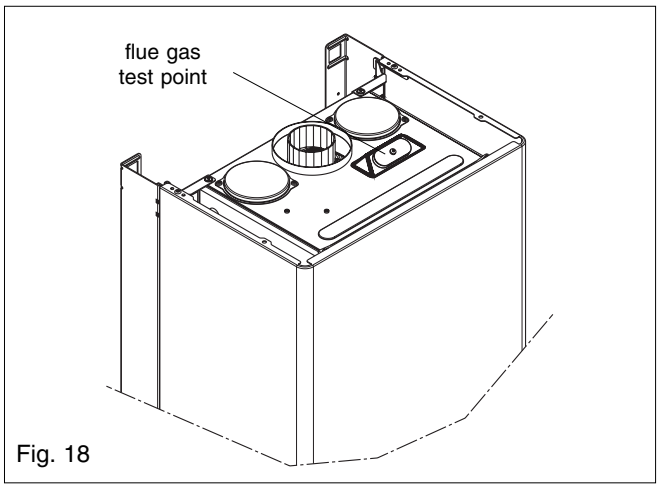


Fig. 18

## 7.5 CHECKING THE EXPANSION VESSEL

Carry out the component removal procedure as described in section 6.4. You must ensure that the boiler is completely drained of water. Using a suitable pressure gauge, remove dust cap on expansion vessel and check the charge pressure. The correct charge pressure should be 0.8 bar - 0.1 bar. If the charge pressure is less, use a suitable pump to increase the charge.

**NOTE**

You must ensure the safety valve is in the open position whilst re-charging takes place. Replace the dust cap and carry out the relevant commissioning procedure (section 5).

## 7.6 EXTERNAL FAULTS

Before carrying out any fault finding or component replacement, ensure the fault is not attributable to any aspect of the installation.

### 7.6.1 INSTALLATION FAULTS

| Symptom | Possible causes |
|---|---|
| No ignition | Check external wiring<br>Check external controls |
| No hot water | Check external controls |
| No central heating | Check external controls |

## 7.7 ELECTRICAL CHECKS

Any electrical checks must be carried out by a suitably qualified person.

### 7.7.1 EARTH CONTINUITY TEST

Isolate the appliance from the electrical supply and using a suitable multi-meter carry out a resistance test. Connect test leads between an appliance earth point and the earth wire of the appliance supply cable. The resistance should be less than 1 ohm. If the resistance is greater than 1 ohm check all earth wires and connectors for continuity and integrity.

### 7.7.2 SHORT CIRCUIT CHECK

Isolate the appliance from the electrical supply and using a suitable multi-meter, carry out a short circuit test between the Live & Neutral connections at the appliance terminal strip (fig. 16).

Repeat above test on the Live & Earth connections at the appliance terminal strip (fig. 16).

**NOTE**

Should it be found that the fuse has failed but no fault is indicated, a detailed continuity check will be required to trace the fault. A visual inspection of components may also assist in locating the fault.

### 7.7.3 POLARITY CHECK

With the appliance connected to the electrical supply and using a suitable multimeter, carry out the following voltage tests:

- connect test leads between the Live & Neutral connections at the appliance terminal strip (fig.16); the meter should read approximately 230V ac. If so proceed to next stage. If not, see section 7.7.4.
- connect test leads between the Live & Earth connections at the appliance terminal strip (fig.16); the meter should read approximately 230V ac. If so proceed to next stage. If not, see section 7.7.4
- connect test leads between the Neutral & Earth connections at the appliance terminal strip (fig.16); the meter should read approximately 0-15V ac. If so polaruty is correct. If not, see section 7.7.4.

### 7.7.4 REVERSED POLARITY OR SUPPLY FAULT

Repeat the above tests at the appliance isolator, if testing reveals correct polarity and/or supply at the isolator, re-check wiring and connections between the isolator and the appliance.

If tests on the isolator also reveal reversed polarity or a supply fault, consult the local electricity supplier for advice.

### 7.7.5 RESISTANCE TO EARTH CHECK

Isolate the appliance from the electrical supply and using a suitable multi-meter carry out a resistance test. Connect test leads between the Live & Earth connections at the appliance terminal strip (fig.9a). If the meter reads other than infinity there is a fault which must be isolated, carry out a detailed continuity check to identify the location of the fault.

**IMPORTANT**

These series of checks must be carried out before attempting any fault-finding procedures on the appliance. On completion of any task which required the disconnection and re-connection of any electrical wiring or component, these checks must be repeated.

## 7.8 FAULT FINDING TEST 'A': CHECKING OPERATION OF ELECTRONIC CONTROL BOARD AT START UP

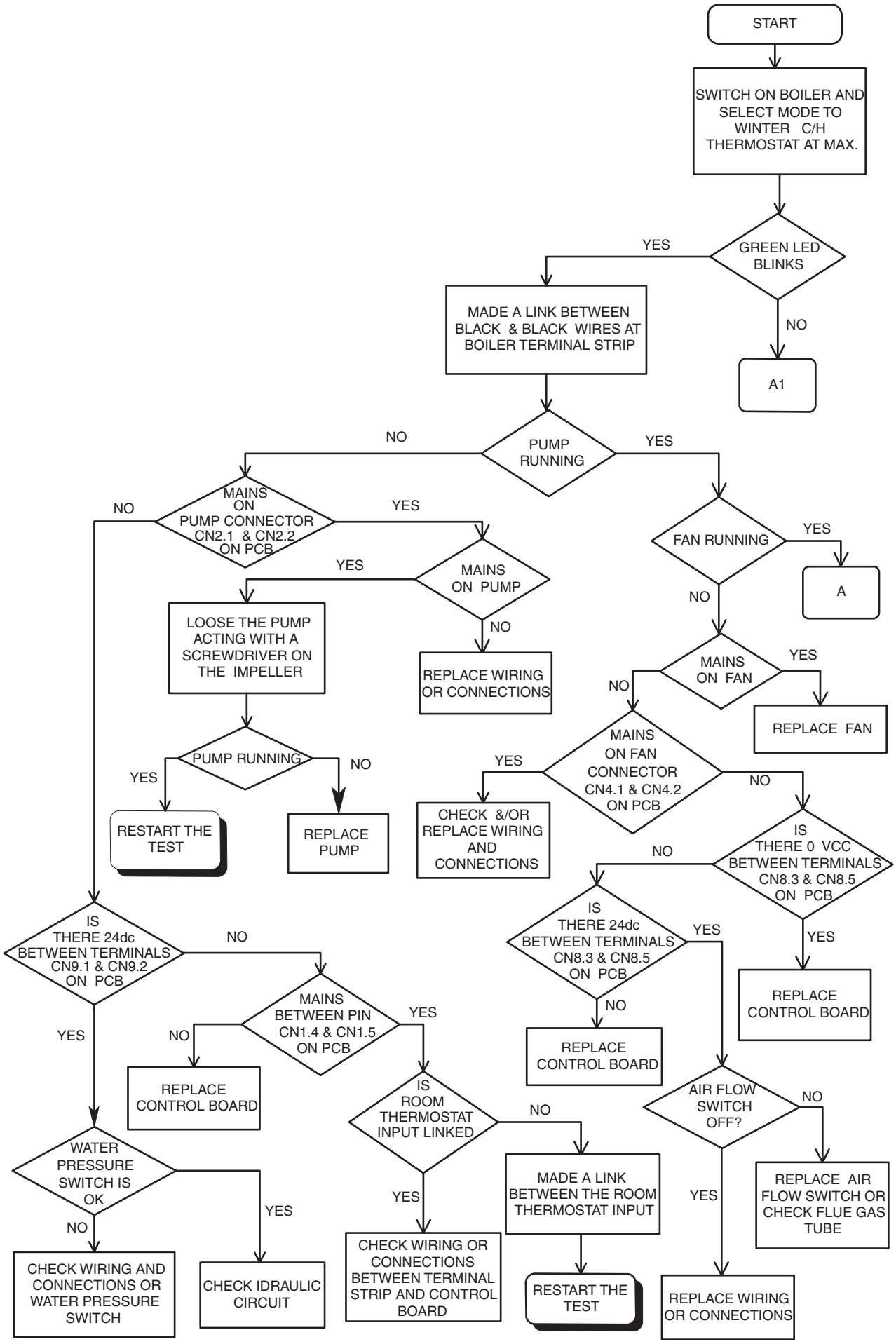

### 7.8.1 FAULT FINDING TEST 'A1'

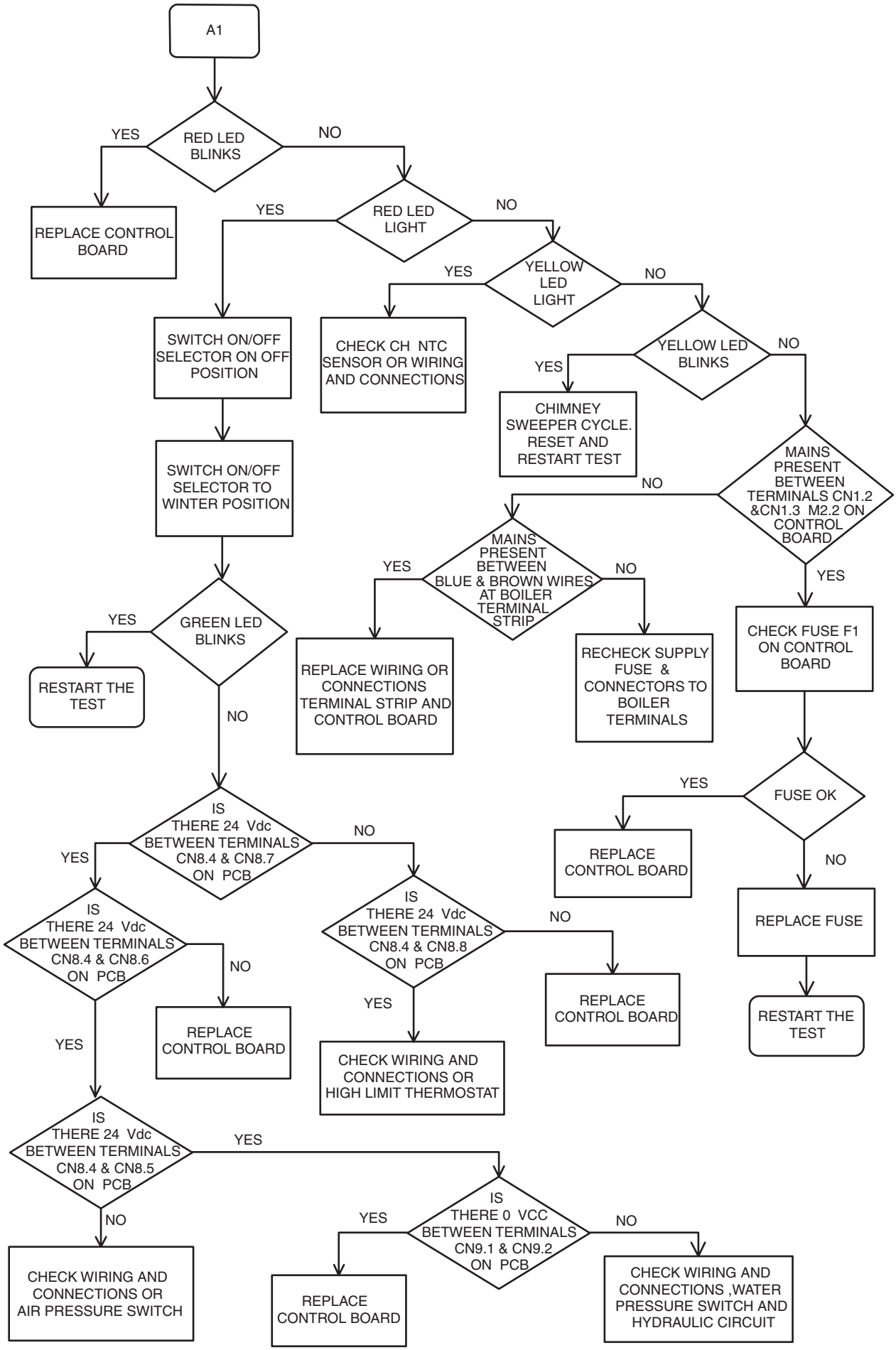

### 7.8.2 FAULT FINDING TEST 'A'

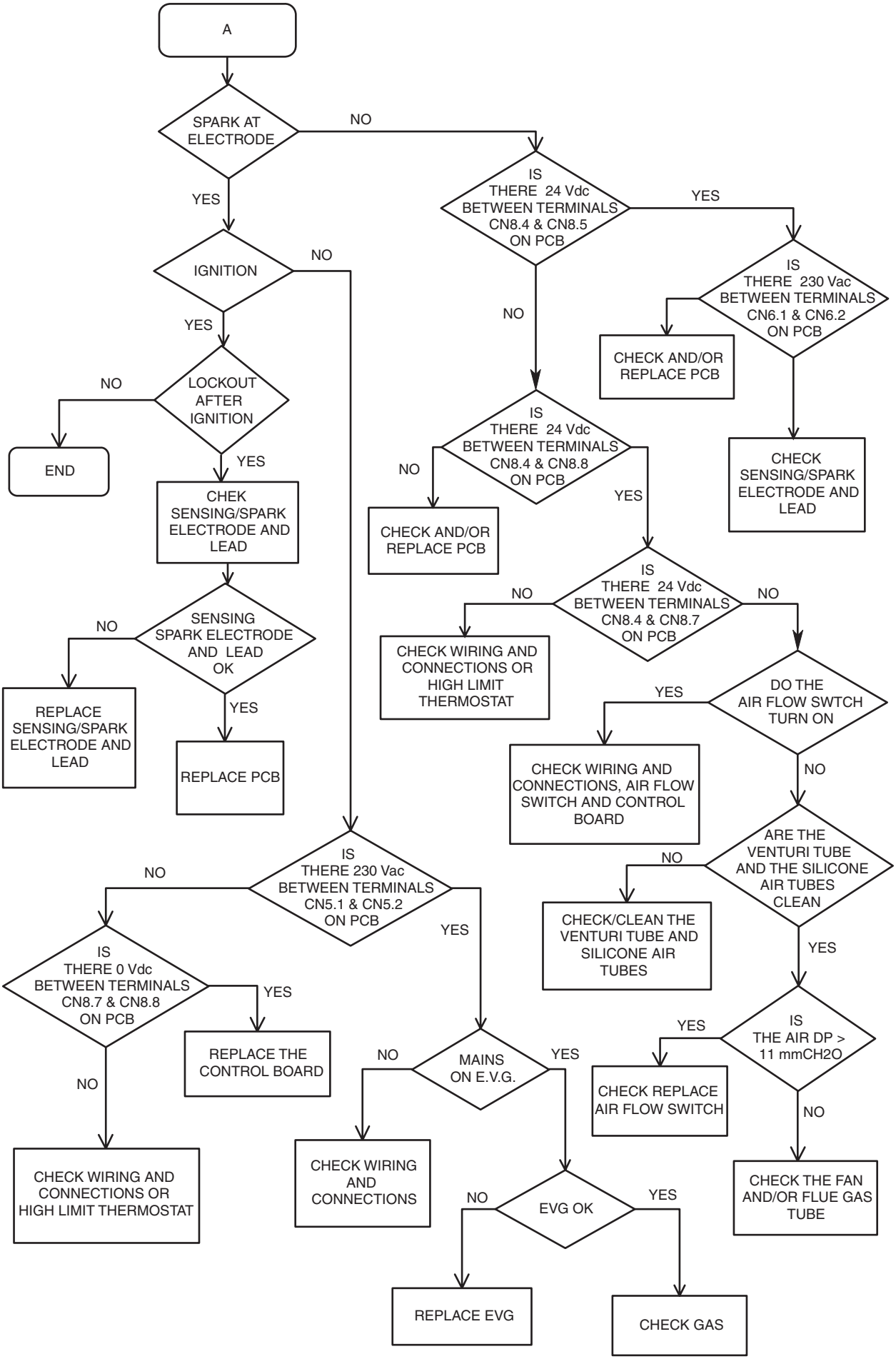

### 7.8.3 FAULT FINDING TEST 'C': CHECK CONTROL IN CH MODE

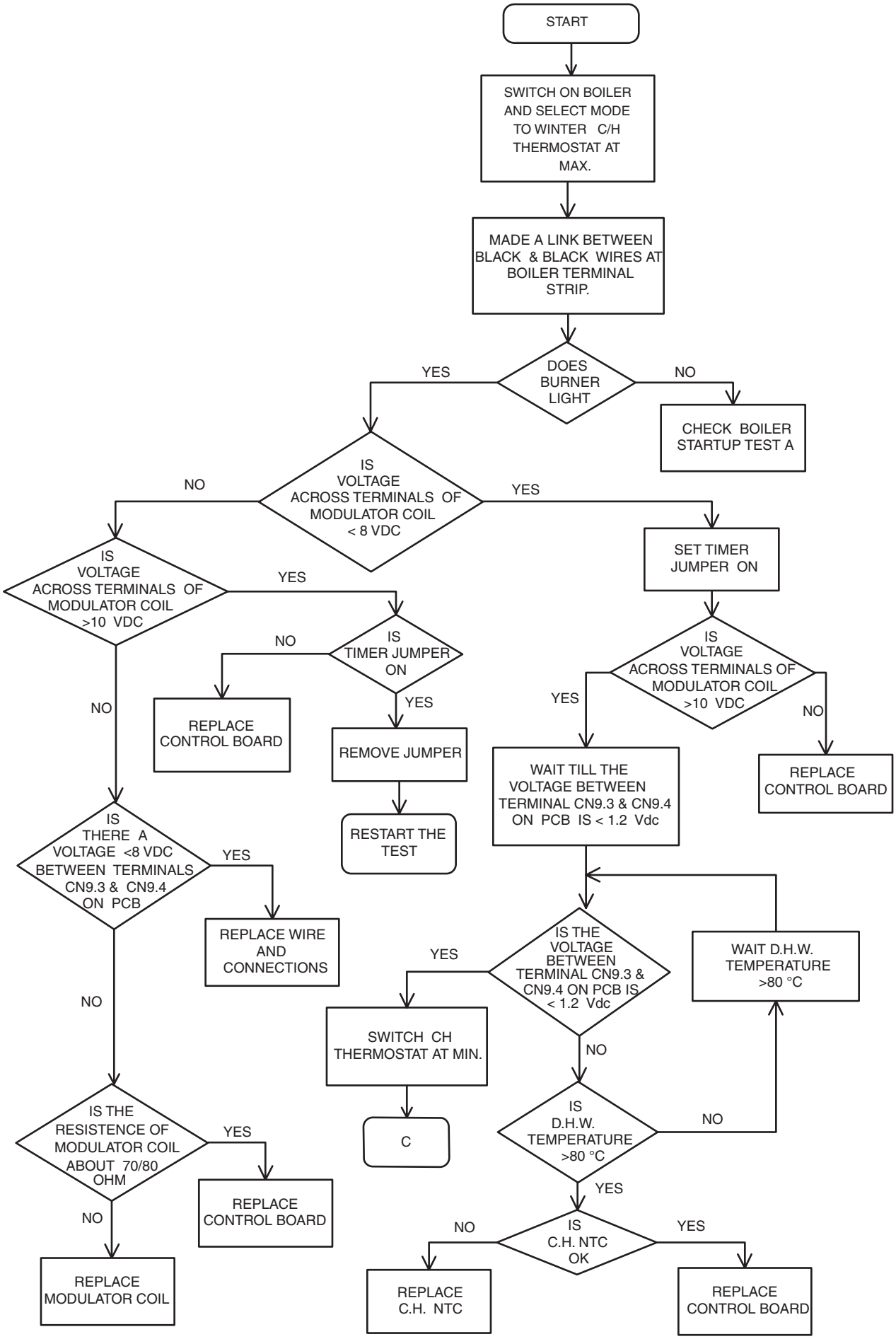

### 7.8.4 FAULT FINDING TEST 'C'

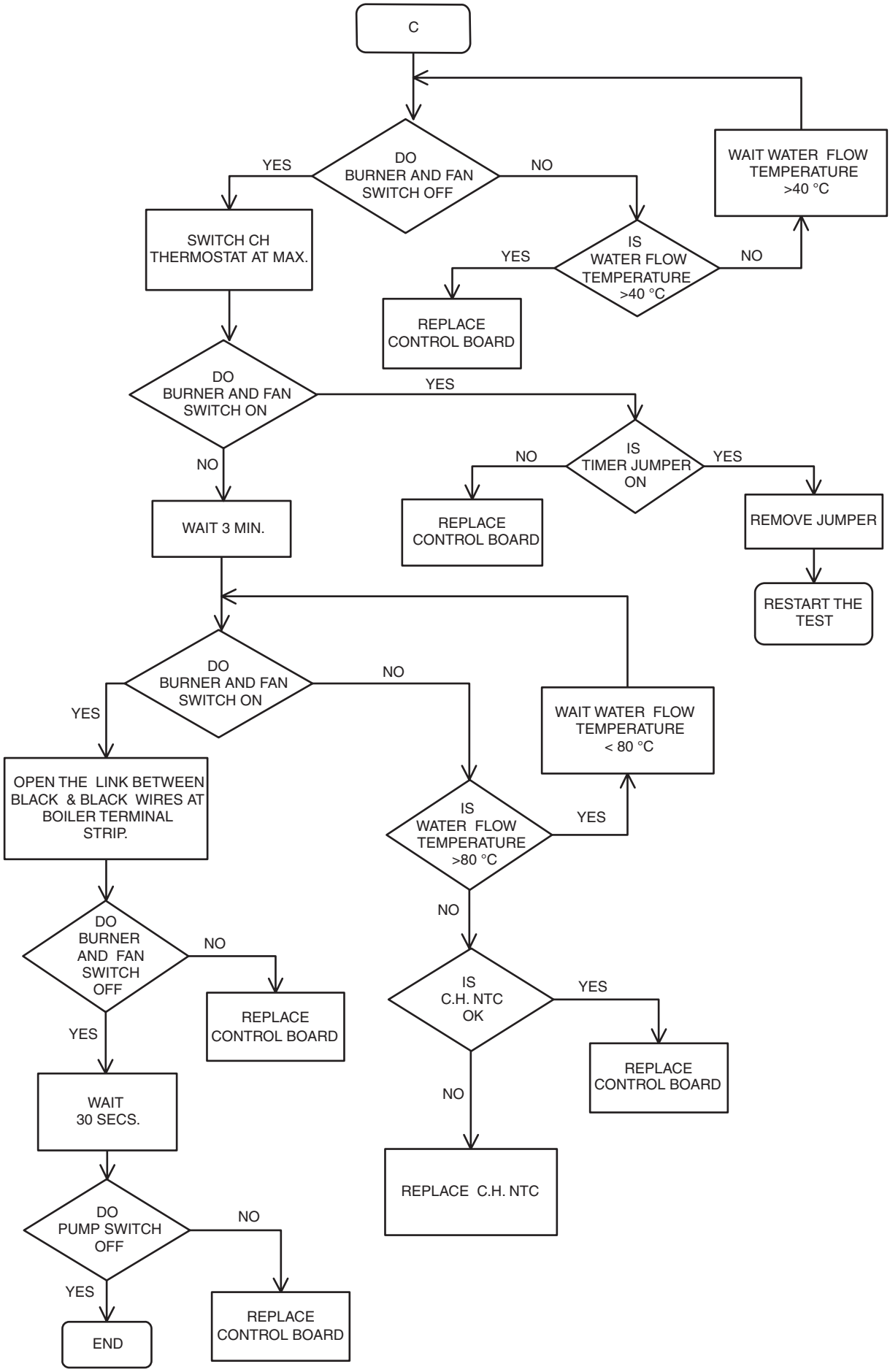

## 8.1 EXTERNAL WIRING

The appliance comes with a factory fitted link to allow basic operation of the boiler via the mode selector switch. If external controls are to be added to the system, they must be connected to the boiler as shown in the following diagrams. For advice on controls that are not featured in this book, please contact Vokera technical on 0870 333 0520.

Fig. 19

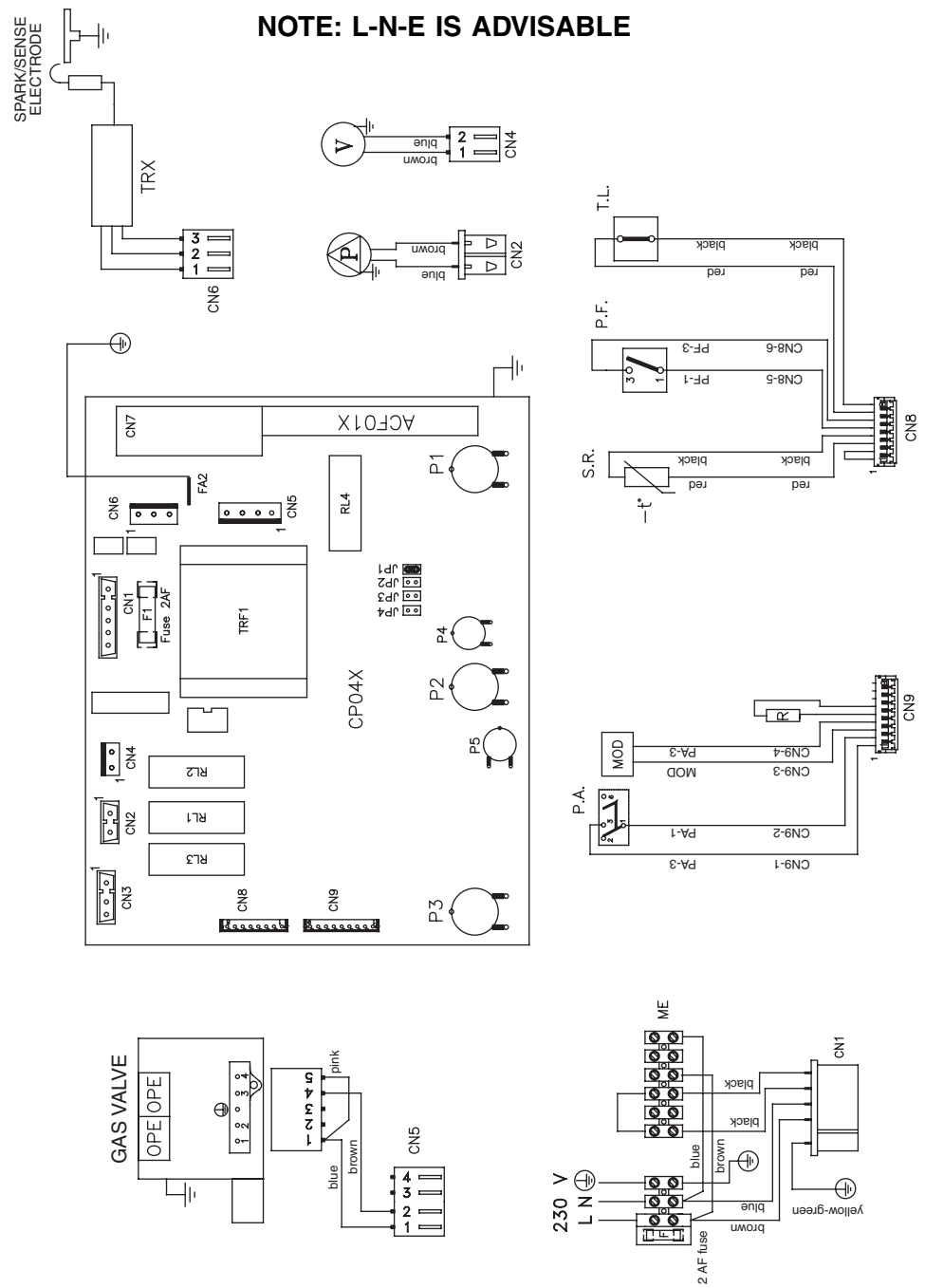


| | | | |
|---|---|---|---|
| **P2** | Central heating temperature control | **RL1** | Pump relay |
| **P3** | Off/summer/winter selector | **RL4** | Ignition relay |
| **P5** | Heating max potentiometer (if necessary) | **MOD** | Modulator |
| **T.A.** | Ambient thermostat | **LED** | Led OK (green) |
| **P.F.** | Air pressure switch | | Led alarm (red) |
| **T.L.** | High limit thermostat | | Combustion test (blink orange) |
| **P.A.** | Water pressure switch | **P** | Pump |
| **S.R.** | Primary NTC sensor | **V** | Fan |
| **JP1** | Jumper CH only | **CP04** | Control board |
| **JP2** | Setting timer | **TRF1** | Transformer |
| **JP3** | Natural gas or LPG selector | **CN1-CN9** | Connettori di collegamento |
| **JP4** | Jumper disable/enable DHW absolut thermostat | **ACF01X** | Ignition control board |
| **F** | External fuse 2 A F | **TRX** | Ignition transformer |
| **F1** | Fuse 2 A F | **ME** | External connector block |
| **E.A./R.** | Spark/sense electrode | | |

## 8.2 CONNECTION OF AN EXTERNAL TIME CLOCK AND ROOM THERMOSTAT (fig. 19A)

Isolate the appliance from the electrical supply. Remove the appliance casing and PCB cover as detailed in section 4.

Connect the time clock/room thermostat as shown in diagram 219A. Vokera recommend the use of "voltage-free" type controls. Should another type of control be preferred, please contact the technical help-line for detailed advice and guidance.

Fig. 19A

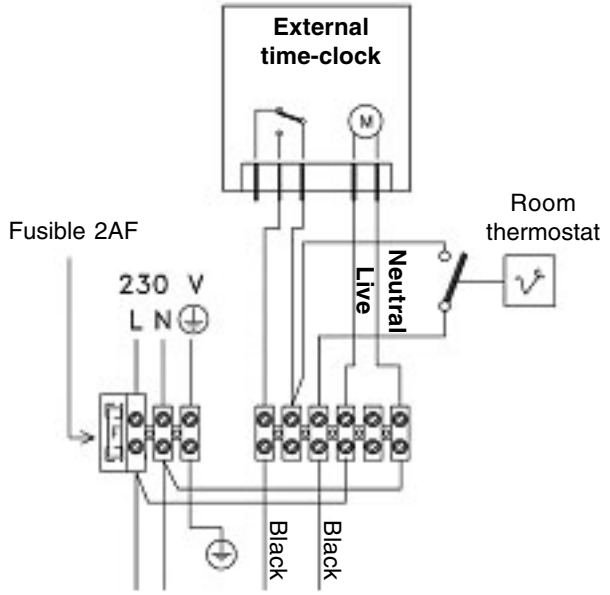


The external time-clock and/or room thermostat must be of the "voltage-free" type and be wired as shown in the diagram.

The "link-wire" must be removed when additional controls are connected to the appliance.

This appliance requires a permanent 230V electrical supply.

Carry out the electrical checks as described in 7.11 prior to refitting the PCB cover and appliance casing.

## 8.3 CONNECTION OF AN INTEGRAL TIME CLOCK

The Vokera integral time clock (Part no. 433) should be installed as shown in diagram 19B.

If a room thermostat is to be connected, it should be of the 'voltage-free' type and must be connected 'in series' as shown in fig. 19A.

Fig. 19B

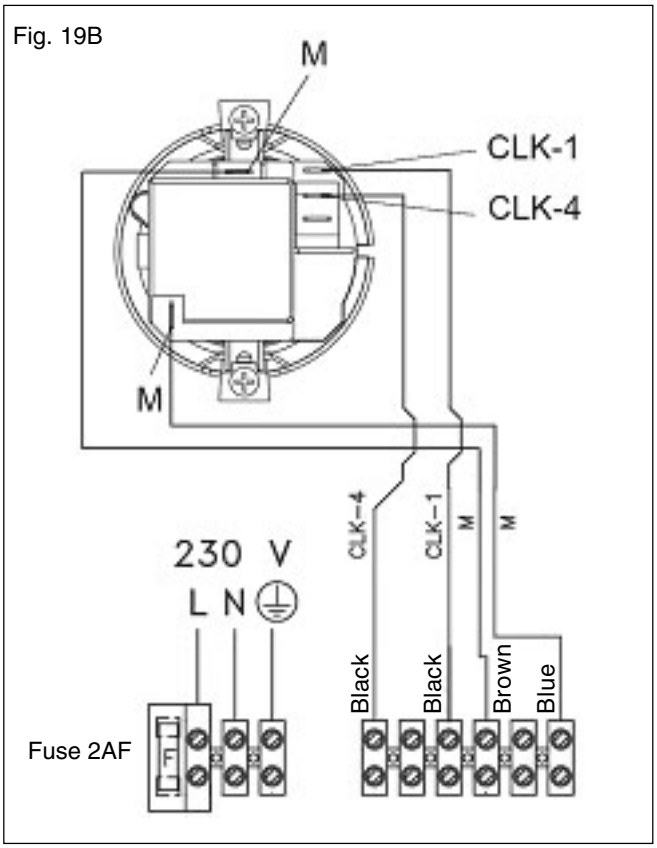


**NOTE**

Guidance on the recommended practice for the installation of external controls, can be found in CHeSS – HC5/HC6 (www.energy-efficiency.gov.uk)

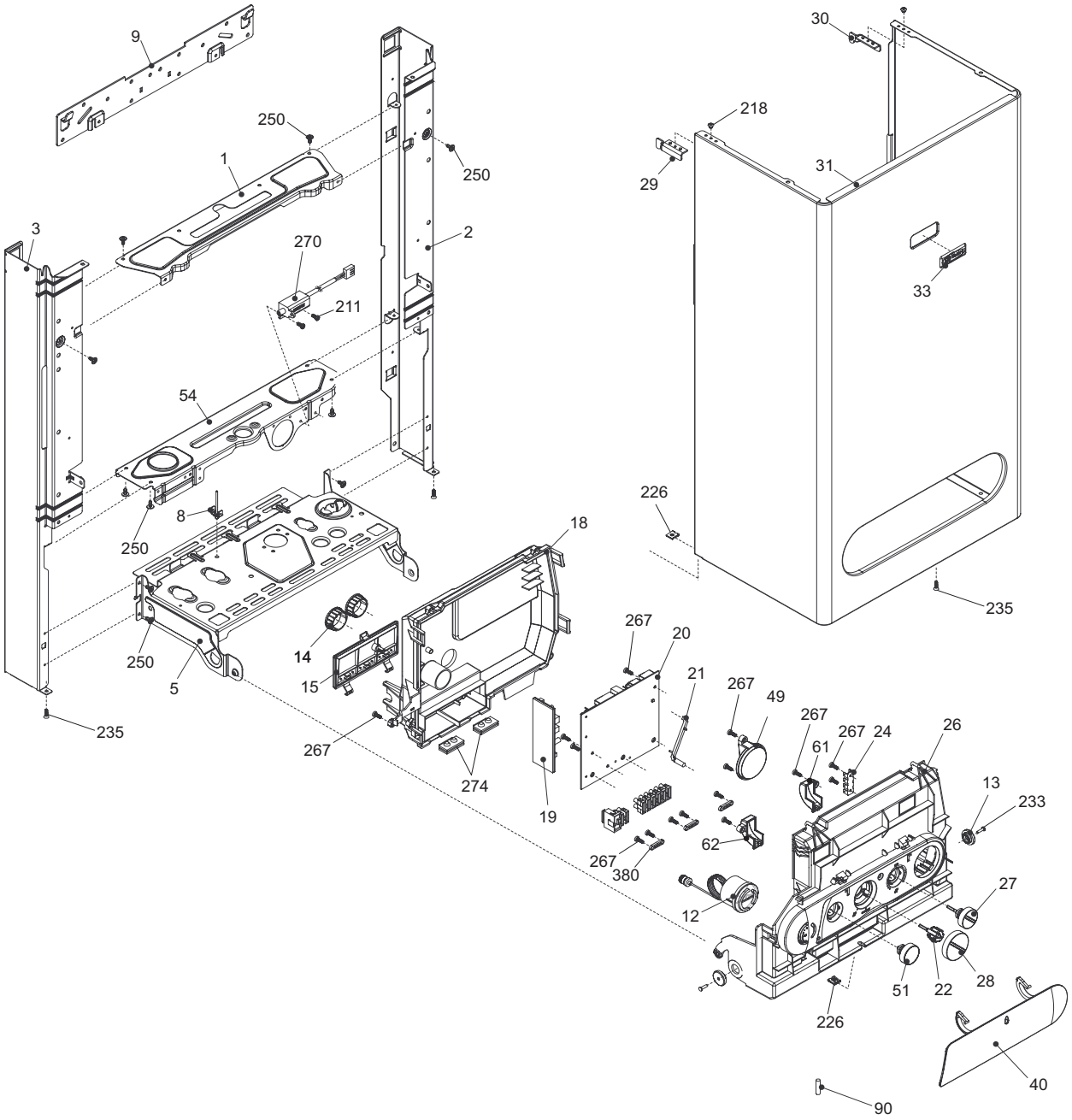


| POS. | DESCRIPTION | |
|---|---|---|
| 1 | Frame assembly | 01005259 |
| 12 | Quick primer pressure gauge | 10024019 |
| 13 | Pin | 10023044 |
| 18 | Cover | 10024173 |
| 19 | Ignition module | 10022174 |
| 20 | Printed Circuit Board | 10025340 |
| 21 | Led Light Guide | 10023816 |
| 26 | Instrumental panel | 10027015 |
| 27 | Knob | 10023818 |
| 28 | Knob | 10023817 |
| 31 | Case | 10023822 |
| 40 | Door panel | 10023810 |
| 61 | Cover assembly | 01005261 |
| 90 | Fuse | 3478 |
| 226 | Edge clip | 128 |
| 270 | Transformer | 10021272 |
| 300 | Wiring harnes | 10023840 |

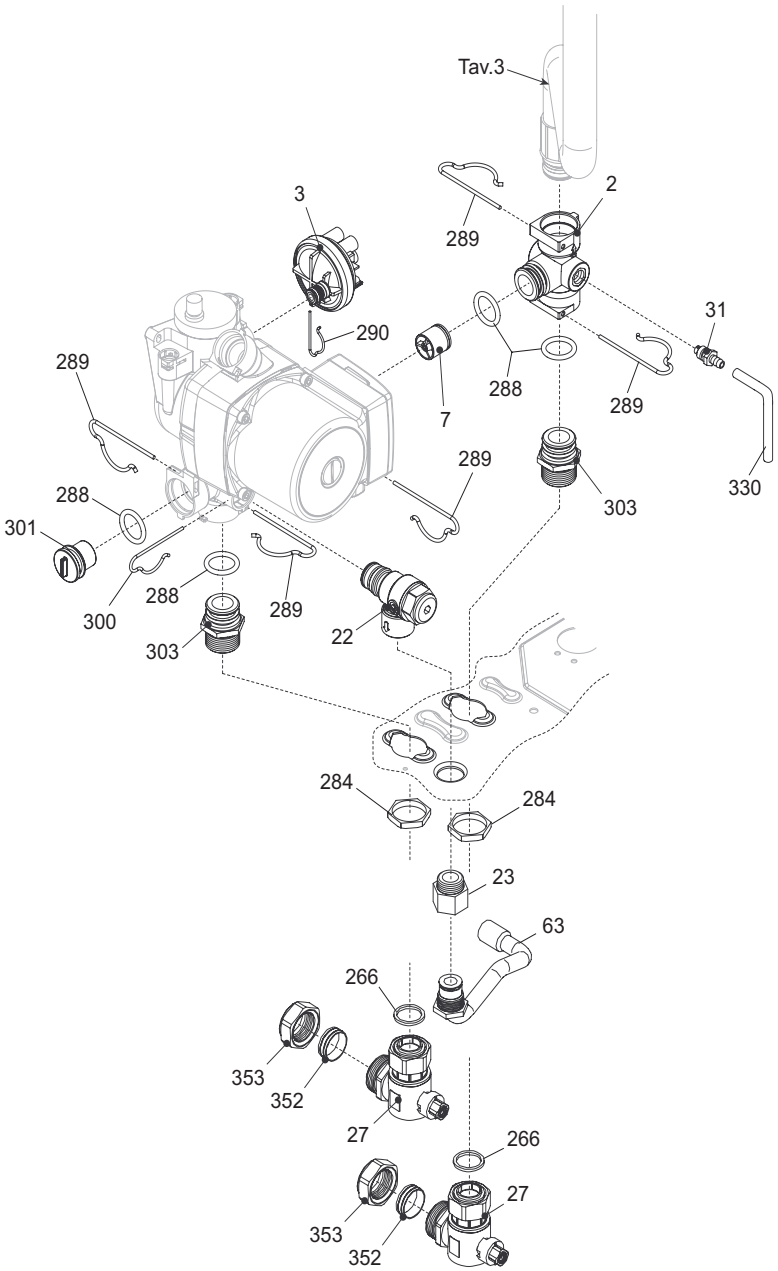


| POS. | DESCRIPTION | |
|---|---|---|
| 2 | Connection | 10022658 |
| 3 | Pressure switch | 2044 |
| 7 | By-pass valve | 2047 |
| 22 | Safety valve | 2907 |
| 23 | Connection | 10022499 |
| 27 | Heating cock | 1789 |
| 31 | Venting plugs kit | 01005137 |
| 63 | Pipe | 10020898 |
| 288 | O ring | 6898 |
| 289 | Clip | 2223 |
| 290 | Clip | 2165 |
| 300 | Clip | 2222 |
| 303 | Connection | 2217 |
| 353 | Ogive | 1824 |
| 400 | Wiring harnes | 10026771 |

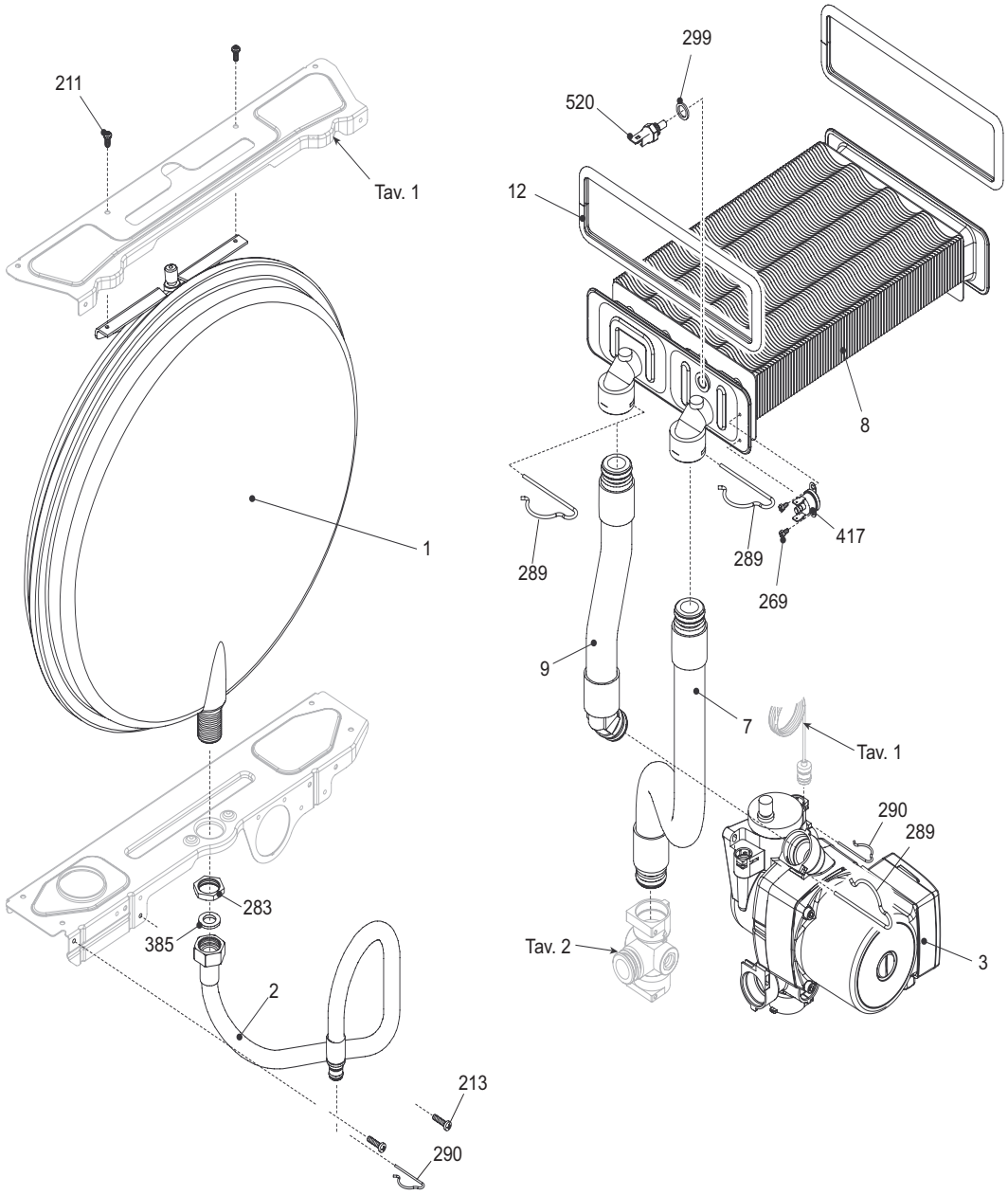


| POS. | DESCRIPTION | |
|---|---|---|
| 1 | Expansion vessel | 2204 |
| 2 | Flexible pipe | 62912164 |
| 3 | Pump | 10027370 |
| 7 | Pipe | 10022000 |
| 8 | Heat exchanger | 10023651 |
| 9 | Pipe | 10022002 |
| 12 | Washer | 2226 |
| 289 | Clip | 2223 |
| 290 | Clip | 2165 |
| 299 | Washer | 10022726 |
| 417 | Limit thermostat | 10024710 |
| 520 | NTC sensor | 7352 |

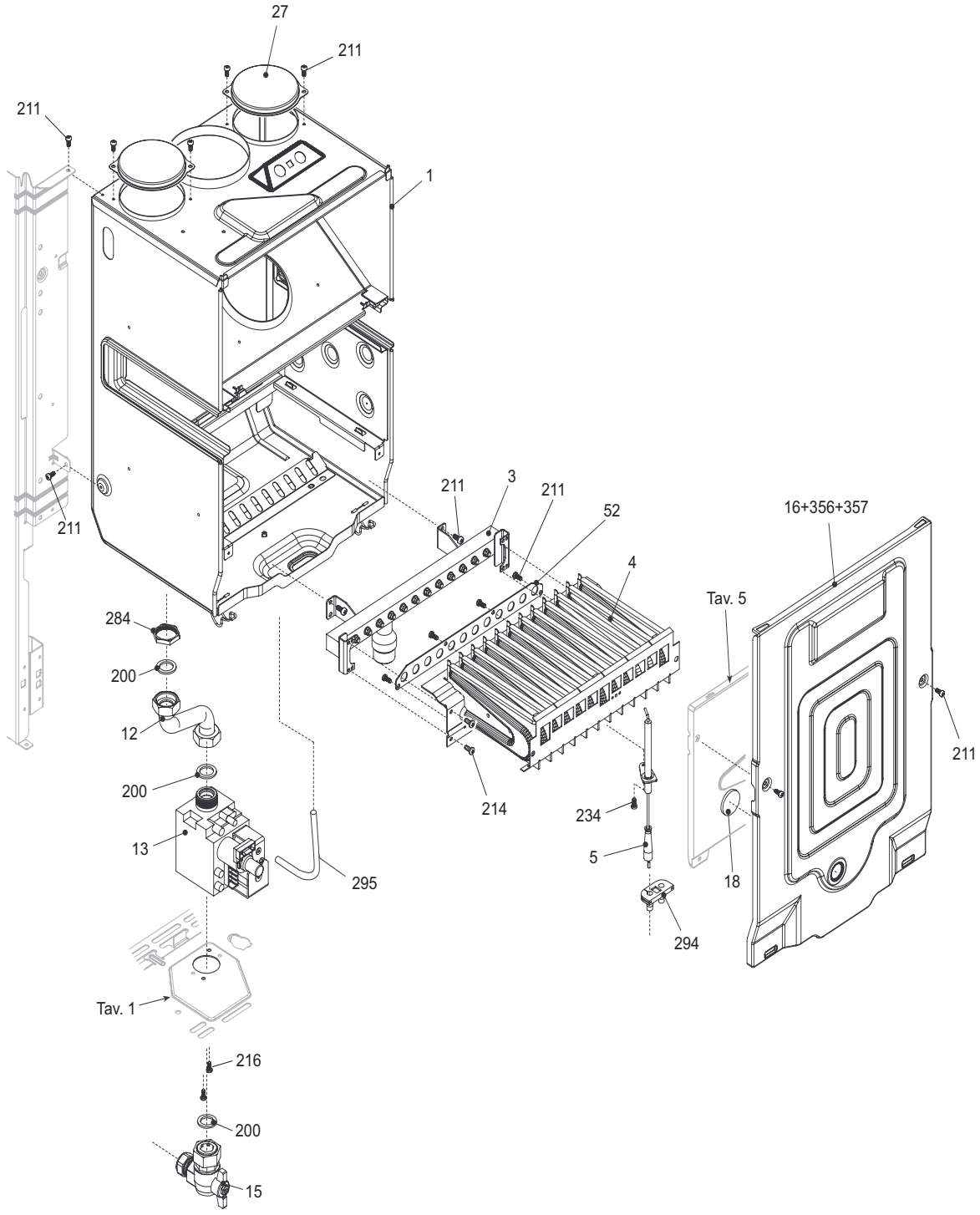


| POS. | DESCRIPTION | |
|---|---|---|
| 1 | Roomsealed chamber | 10024669 |
| 2 | Clip | 0442 |
| 3 | Main burner injector manifold | 10025271 |
| 4 | Burner | 10025270 |
| 5 | Spark electrode | 10025985 |
| 12 | Pipe | 10023996 |
| 13 | Gas valve | 10025074 |
| 14 | Gas valve solenoid | 10020838 |
| 15 | Gas cock | 10020897 |
| 16 | Cover assembly | 10024779 |
| 18 | Glass | 10021558 |
| 27 | Air box hole cap | 10023805 |
| 200 | Washer | 5023 |

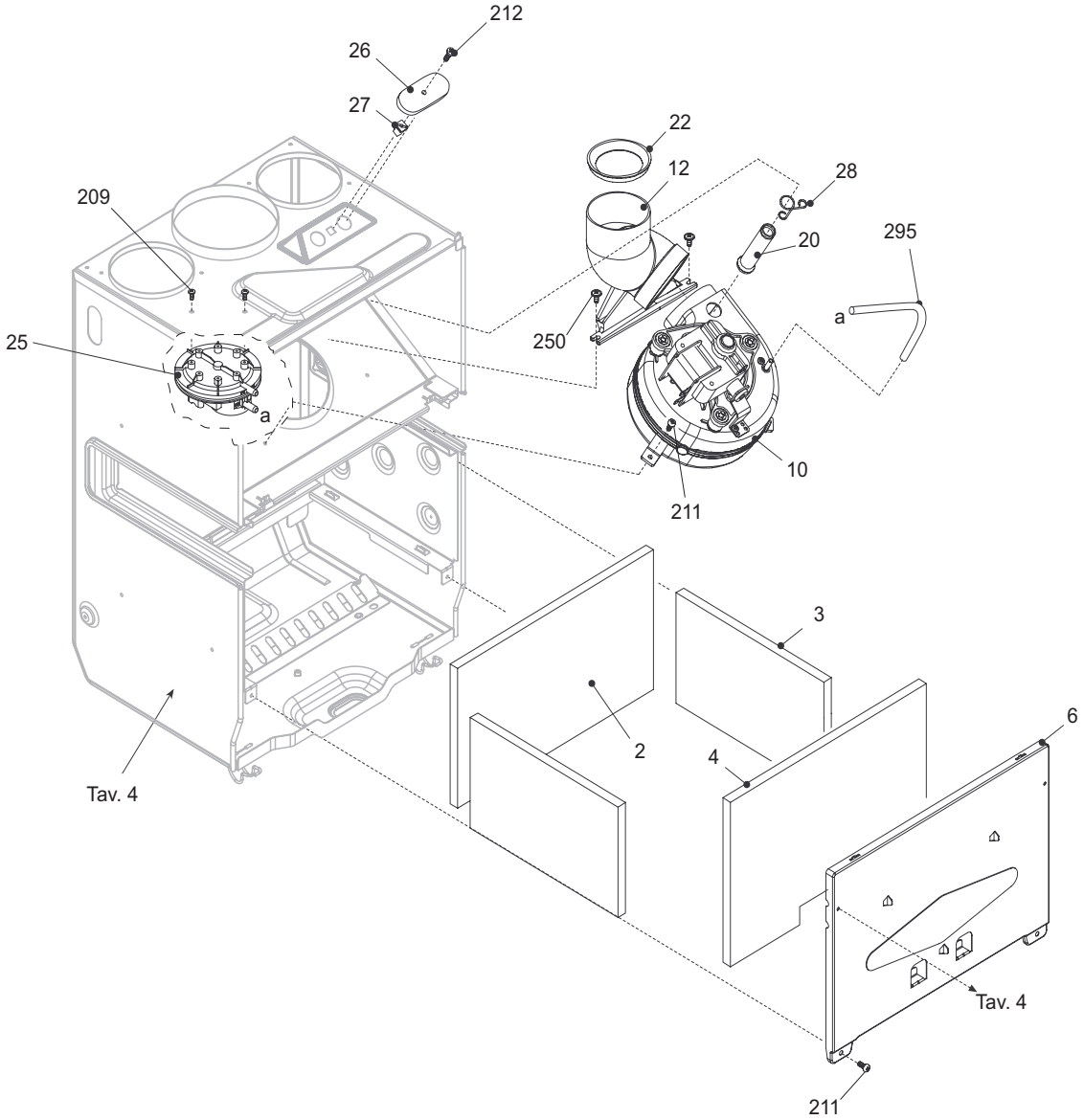


| POS. | DESCRIPTION | |
|---|---|---|
| 2 | Back insulating panel | 2230 |
| 3 | Lateral insulating panel | 2231 |
| 4 | Front insulating panel | 2232 |
| 10 | Fan | 10020793 |
| 12 | Connection | 10021972 |
| 20 | Fumes testing connection pipe | 10021973 |
| 25 | Pressure differential switch kit | 01005272 |
| 28 | Stop clip | 10020626 |
| 100 | Wiring harnes | 10023838 |

# SECTION 10 L.P.G. INSTRUCTIONS

For details of converting boilers to LPG please refer to the instructions supplied with the relevant conversation kit.

## 10.1 TECHNICAL DATA

| GAS PRESSURES | |
|---|---|
| Inlet pressure | 37 mbar |
| Maximum burner pressure | 36 mbar |
| Minimum burner pressure | 7.3 mbar |
| Gas rate maximum | 2.04 $Sm^3/h$ |
| Gas rate minimum | 0.87 $Sm^3/h$ |
| Injector quantity | 12 |
| Injector size | 0.77 mm |

## 10.2 RELATED DOCUMENTS

| | | | |
|---|---|---|---|
| BS 6798 | | 1987 | INSTALLATION OF BOILERS OF RATED INPUT NOT EXCEEDING 60 kW |
| BS 5449 | PART 1 | 1990 | FORCED CIRCULATION HOT WATER SYSTEMS |
| BS 5546 | | 1990 | INSTALLATION OF GAS HOT WATER SUPPLIES FOR DOMESTIC PURPOSES |
| BS 5440 | PART 1 | 1990 | FLUES |
| BS 5482 | PART 1 | 1994 | DOMESTIC BUTANE & PROPANE GAS BURNERS IN PERMAMENT DWELLINGS |

## 10.3 GAS SUPPLY

The gas supply must be connected to the appliance by a competent LPG installer and must be of sufficient size to supply the appliance at its maximum output.

An existing supply must be checked to ensure that it is of adequate size to deal with the maximum rated input of this and any other appliances that it serves.

## 10.4 GAS SUPPLY INSTALLATION

The entire installation, including the meter, must be purged and checked for gas soundness.

## 10.5 CHECKING AND ADJUSTING BURNER PRESSURES (fig. 17)

Although the burner pressure is factory set, it is necessary to check it during servicing or if the gas valve has been removed.

Isolate the appliance from the electrical supply and attach a suitable manometer to the gas valve outlet test nipple.

Remove the compensator tube.

### 10.5.1 SETTING THE MAXIMUM BURNER PRESSURE

Light the boiler as described in 5.6 and compare the reading on the manometer with the value described in 10.1. If adjustment is required, remove the protective cap from the gas valve modulating coil assembly and turn the outer (10mm) nut clockwise to increase, or counter-clockwise to decrease the burner pressure.

**NOTE**

You should ensure that all radiators or heat emitters are fully open during the above procedure. This will ensure that the output of the boiler (burner pressure) is not compromised due to a high flow temperature.

### 10.5.2 SETTING THE MINIMUM BURNER PRESSURE

Once the maximum burner pressure has been checked and/or adjusted, remove one of the grey wires from the modulating coil. Compare the reading on the manometer with the value described in 10.2. If adjustment is required, turn the inner (red) cross-head screw clockwise to increase, or counter-clockwise to decrease the burner pressure, whilst ensuring that the outer (10mm) nut does not move.

When checking and/or adjustment has been completed, isolate the appliance from the electrical supply, replace the protective cap, refit the compensator tube, refit the grey wire to the modulating coil, remove the manometer and tighten the outlet test nipple.

**IMPORTANT**

**A GAS SOUNDNESS CHECK MUST BE CARRIED OUT.**

Vokèra
heating for life

Cod. 10027798 - 28/06 - Ed. 4

**Registered address:**
Vokèra Ltd
Borderlake House
Unit 7 Riverside Industrial Estate
London Colney
Herts AL2 1HG

**enquiries@vokera.co.uk**

**www.vokera.co.uk**
**www.vokera.ie**

***Sales, General Enquires***
**T** 0844 391 0999
**F** 0844 391 0998

Vokèra Ireland
West Court, Callan
Co Kilkenny
**T** 056 7755057
**F** 056 7755060

Vokèra Limited reserve the right to change
specification without prior notice
Consumers statutory rights are not affected.

A Riello Group Company.
Company Reg No: 1047779