SABRE

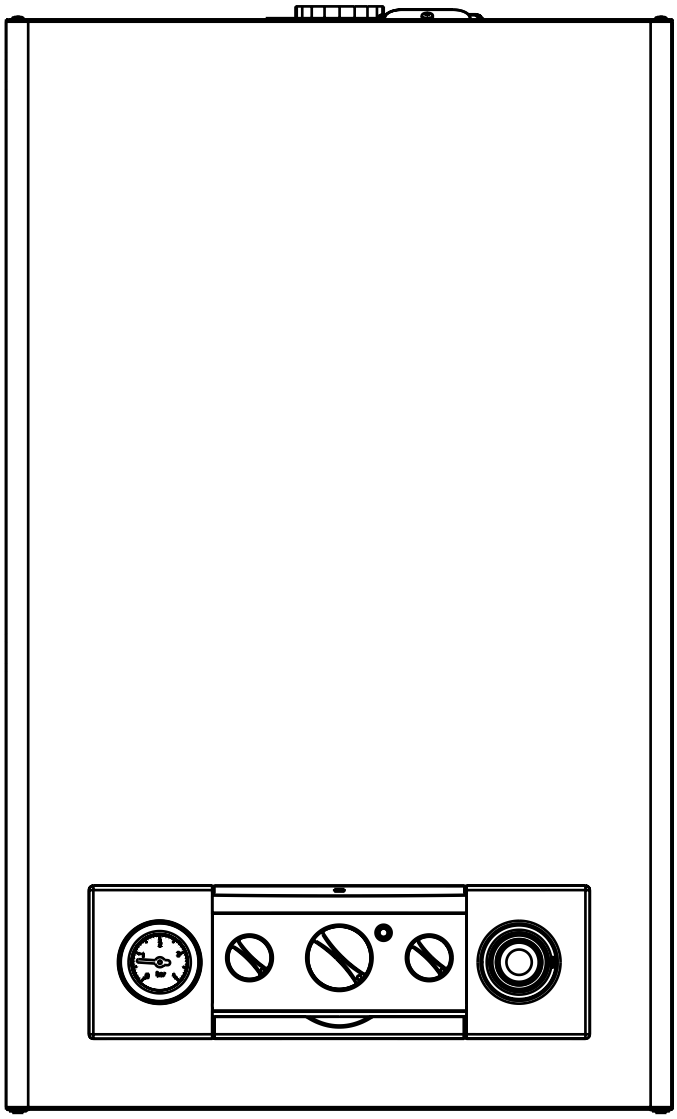

Installation & Servicing Instructions

CE

THESE INSTRUCTIONS TO BE RETAINED BY USER

spares & parts online
IBASIS.co.UK©

INTRODUCTION

The Sabre range of appliances are combined central heating and domestic hot water boilers, which – by design – incorporates full sequence electronic ignition, circulating pump, expansion vessel, safety valve, pressure gauge, automatic by-pass, and mechanical time clock.

Sabre is produced as a room sealed appliance, suitable for wall mounting applications only. Sabre is provided with a fan powered flue outlet with an annular co-axial combustion air intake that can be rotated – horizontally – through 360 degrees for various horizontal or vertical applications.

This appliance is designed primarily for use with sealed systems; consequently it is not intended for use on an open vented system.

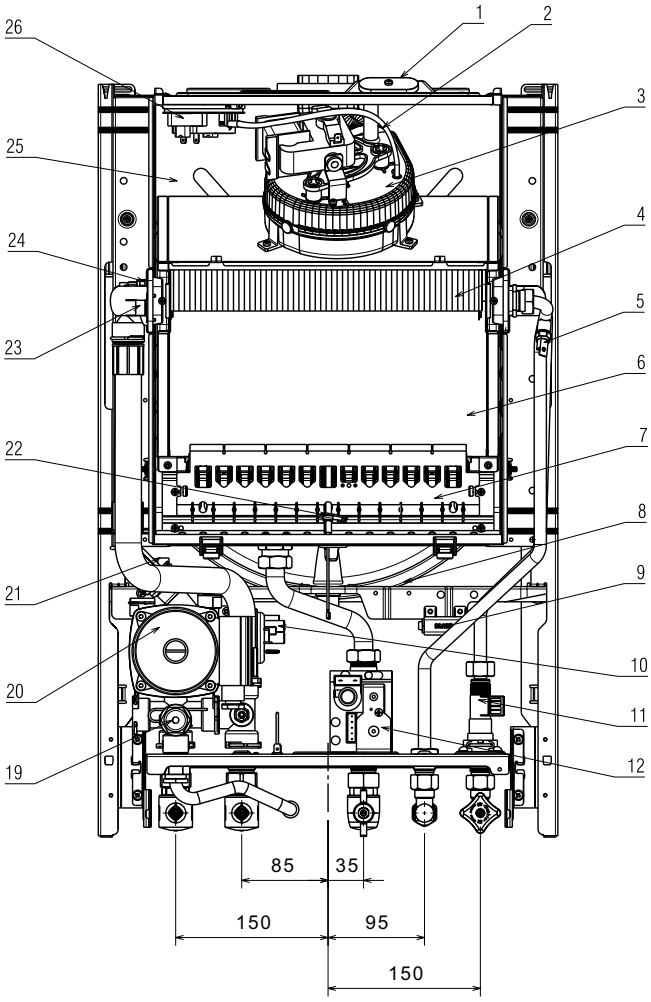

Fig.1 General Layout

1 Flue Analysis Test Point
2 Pressure Tube Negative
3 Fan Assembly
4 Heat Exchanger
5 Secondary thermistor
6 Combustion chamber
7 Burner
8 Expansion vessel
9 Transformer
10 Water pressure switch
11 Domestic Hot Water Flow Switch
12 Gas Valve
13 Timeclock
14 CH position
15 Fault indicator led
16 Mode selector switch
17 DHW position
18 Pressure gauge
19 Safety valve
20 Pump
21 Auto air vent
22 Electrode
23 High limit thermistor
24 Primary thermistor
25 Air chamber (with cover removed)
26 Air pressure switch
27 Auto by pass (fig. 2)
28 Water flow restrictor (fig. 2)

Fig. 1

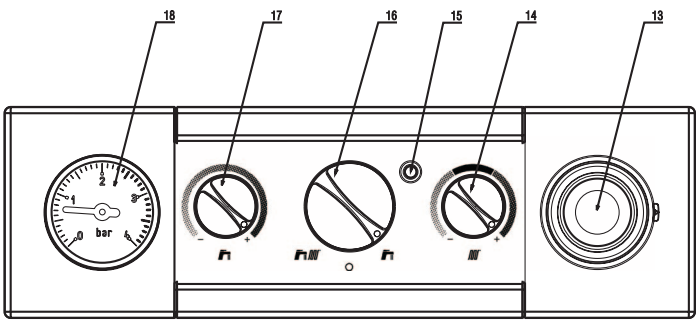

1.1 PRINCIPLE COMPONENTS

- A fully integrated, electronic control board featuring mode selection switch, full sequence-electronic ignition, temperature control system, and appliance status indicator.
- A BI-thermal gas to water heat exchanger.
- A multi-functional gas valve.
- Two-stage, primary water pressure switch. Integral pump, expansion vessel, pressure relief valve, pressure gauge, domestic water flow switch, fan, differential air pressure switch, and time clock.

MODES OF OPERATION

1.2 CENTRAL HEATING MODE

When there is a request for central heating via the time-clock and/or any external controls, the pump and fan are started, the fan proves the differential air pressure switch which in-turn, allows an ignition sequence to begin.

Ignition is sensed by the electronic circuitry to ensure flame stability at the burner. Once successful ignition has been achieved the appliance operates al 75% of maximum for a fifteen-minute period, and thereafter the appliance operates on maximum output until the desired temperature setting is reached.

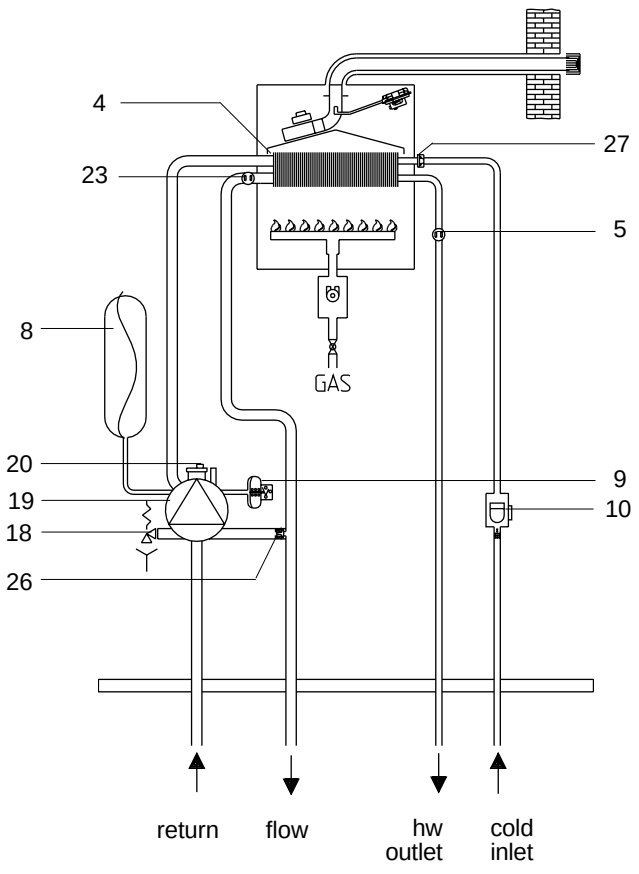

Fig. 2

Once the desired temperature is reached, the burner will modulate to maintain that temperature, however should the temperature within the appliance continue to rise, the burner will shut down and the boiler will perform a three-minute anti-cycle (timer delay).

1.3 HOT WATER MODE

When there is a demand for domestic hot water the domestic hot water flow switch is proved by the flow of water through the appliance, this allows the fan to run, the fan proves the differential air pressure switch which in-turn, allows an ignition sequence to begin.

Ignition is sensed by the electronic circuitry to ensure flame stability at the burner. Once successful ignition has been achieved the appliance will modulate burner gas pressure to maintain the desired water temperature, should the temperature of the domestic hot water exceed the temperature setting by 5 ºC the burner will shut down until the water temperature drops below the required setting.

1.4 SAFETY DEVICES

In both central heating and domestic hot water modes, safe operation is ensured by.

- A water pressure switch that monitors the system pressure and will deactivate the pump and prevent burner ignition should the pressure or primary flow rate fall below the rated tolerance.
- Differential air pressure switch that checks the correct operation of the fan and flue thereby preventing or interrupting burner operation.
- A high limit thermostat that overrides the control circuit to prevent or interrupt burner ignition.
- A safety valve which releases excess pressure from the primary circuit.

1.5 FROST PROTECTION

The appliance has built-in frost protection that allows the pump to operate if the appliance temperature drops to 7 ºC, should the temperature continue to drop the burner will light until the primary circuit temperature exceeds 30 ºC.

SECTION 2 TECHNICAL DATA

	SABRE 24	*SABRE* 28
2.1 Central heating		
Heat input (kW)	26.3	31.0
Heat output (maximum) kW	24.0	28.0
Heat output (minimum) kW	9.4	10.5
Minimum working pressure	0,5 bar	
Maximum working pressure	3.0 bar	
Minimum flow rate	350 l/h	
2.2 Domestic hot water	***SABRE* 24**	***SABRE* 28**
Heat input (kW)	26.3	31.0
Heat output (maximum) kW	24.0	28.0
Heat output (minimum) kW	8.2	8.7
Flow rate (35 °C rise)	9.8 l/min	11.5 l/min
Maximum inlet pressure	6.0 bar	
Minimum inlet working pressure	0.15 bar	
Minimum flow rate	2 l/min.	
2.3 Gas pressures	***SABRE* 24**	***SABRE* 28**
Inlet pressure G20	20.0 mbar	
Maximum burner pressure	10.1 mbar	10.2 mbar
Minimum burner pressure (central heating)	1.9 mbar	
Minimum burner pressure (domestic hot water)	1.5 mbar	1.3 mbar
Gross rate (maximum)	2.78 m^3/h	3.28 m^3/h
Injectors size	12 x 1.35 mm	14 x 1.35 mm
2.4 Expansion vessel	***SABRE* 24**	***SABRE* 28**
Capacity	8 litres	
Maximum system volume	76 litres	
Pre-charge pressure	1.0 bar	
2.5 Dimensions	***SABRE* 24**	***SABRE* 28**
Height	740 mm	
Width	400 mm	450 mm
Depth	328 mm	
Dry weight	32 kg	34 kg
2.6 Clearances	***SABRE* 24**	***SABRE* 28**
Left side	50 mm	
Right side	12 mm	
Top	150 mm from casing or 25 mm above flue elbow, whichever is applicable	
Bottom	150 mm	
Front	600 mm	
2.7 Connections	***SABRE* 24**	***SABRE* 28**
Flow & return	22 mm	
Hot & cold water connections	15 mm	
Gas	15 mm	
Safety valve	15 mm	
2.8 Electrical	***SABRE* 24**	***SABRE* 28**
Voltage	230V/~ 50hz	
Power consumption	125 W	
Internal fuse	2 A	
PCB fuse	2 AF	
External fuse	3 A	
2.9 Flue details	***SABRE* 24**	***SABRE* 28**
Maximum horizontal flue length (concentric)	4.25 m	3.4 m
Maximum vertical flue length (concentric)	5 m	4.2 m
2.10 Efficiency	***SABRE* 24**	***SABRE* 28**
SEDBUK band “D”	80,3%	80,3%

Ref. Condition 15 °C , 1013,25 mbar, dry gas
NOTE: L.P.G. data refer to section 10

2.11 PUMP DUTY

Fig. 3 shows the flow rate available – after allowing for pressure loss through the appliance – against system pressure loss. When using this graph apply only the pressure loss of the system. The graph is based on a 20 ºC temperature differential.

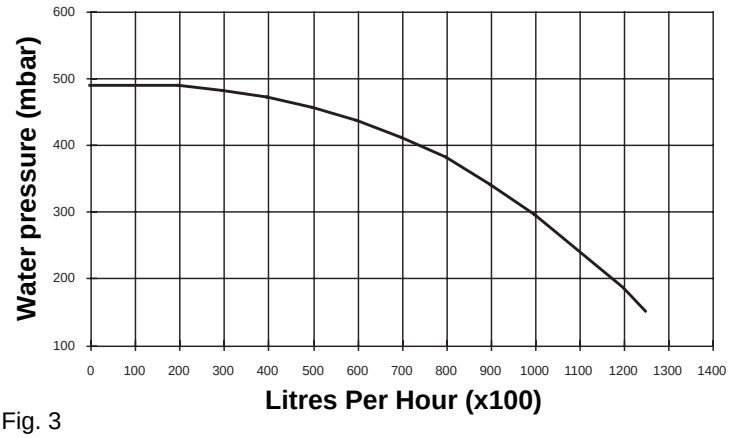

Fig. 3

SECTION 3 GENERAL REQUIREMENTS (UK)

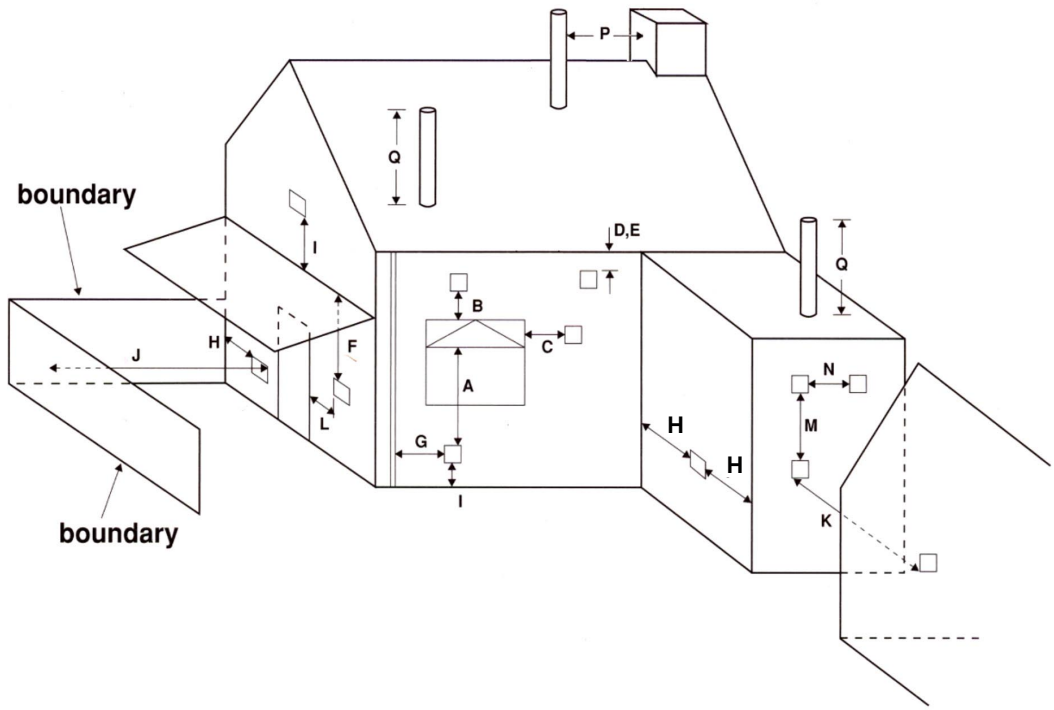

Key	Location	Minimum distance
A	Below an opening (window, air-brik, etc.)	300 mm
B	Above an opening (window, air-brik, etc.)	300 mm
C	To the side of an opening (window, air-brik, etc.)	300 mm
D	Below gutter, drain-pipe, etc.	75 mm
E	Below eaves	200 mm
F	Below balcony, car-port roof, etc.	200 mm
G	To the side of a soil/drain-pipe, etc.	150 mm
H	From internal/external corner or boundary	300 mm
I	Above ground, roof, or balcony level	300 mm
J	From a surface or boundary facing the terminal	600 mm
K	From a terminal facing a terminal	1200 mm
L	From an opening in the car-port into the building	1200 mm
M	Vertically from a terminal on the same wall	1500 mm
N	Horizontally from a terminal on the same wall	300 mm
P	From a structure to the side of the vertical terminal	300 mm
Q	From the top of the vertical terminal to the roof flashing	As determined by the fixed collar of the vertical terminal

Fig. 4

This appliance must be installed by a competent person in accordance with the Gas Safety (Installation & Use) Regulations.

3.1 RELATED DOCUMENTS

The installation of this boiler must be in accordance with the relevant requirements of the Gas Safety (Installation & Use) Regulations, the local building regulations, the current I.E.E. wiring regulations, the bylaws of the local water undertaking, the Building Standards (Scotland) Regulation, and Building Standards (Northern Ireland) Regulations.

It should be in accordance also with any relevant requirements of the local authority and the relevant recommendations of the following British Standard Codes of Practice.

3.2 LOCATION OF APPLIANCE

The appliance may be installed in any room or internal space, although particular attention is drawn to the requirements of the current I.E.E. wiring regulations, and in Scotland, the electrical provisions of the Building Regulations, with respect to the installation of the appliance in a room or internal space containing a bath or shower.

BS 5440	PART 1	FLUES
BS 5440	PART 2	FLUES & VENTILATION
BS 5449	PART 1	FORCED CIRCULATION HOT WATER SYSTEMS
BS5546		INSTALLATION OF GAS HOT WATER SUPPLIES FOR DOMESTIC PURPOSES (2ND FAMILY GASES)
BS 6798		INSTALLATION OF BOILERS OF RATED INPUT NOT EXCEEDING 60kW
BS 6891		LOW PRESSURE INSTALLATION PIPES
BS 7074	PART 1	APPLICATION, SELECTION, AND INSTALLATION OF EXPANSION VESSELS AND ANCILLARY EQUIPMENT FOR SEALED WATER SYSTEMS

When an appliance is installed in a room or internal space containing a bath or shower, the appliance or any control pertaining to it must not be within reach of a person using the bath or shower.

The location chosen for the appliance must permit the provision of a safe and satisfactory flue and termination. The location must also permit an adequate air supply for combustion purposes and an adequate space for servicing and air circulation around the appliance. Where the installation of the appliance will be in an unusual location special procedures may be
Necessary, BS 6798 gives detailed guidance on this aspect.

A compartment used to enclose the appliance must be designed and constructed specifically for this purpose. An existing compartment/cupboard may be utilised provided that it is modified to suit. Details of essential features of compartment/cupboard design including airing cupboard installations are given in BS 6798. This appliance is not suitable for external installation.

3.3 GAS SUPPLY

The gas meter – as supplied by the gas supplier – must be checked to ensure that it is of adequate size to deal with the maximum rated input of all the appliances that it serves. Installation pipes must be fitted in accordance with BS 6891.

Pipe work from the meter to the appliance must be of adequate size. Pipes of a smaller size than the appliance gas inlet connection must not be used. The installation must be tested for soundness in accordance with BS6891.
If the gas supply serves more than one appliance, it must be ensured that an adequate supply is maintained to each appliance when they are in use at the same time.

3.4 FLUE SYSTEM

The terminal should be located where the dispersal of combustion products is not impeded and with due regard for the damage and discoloration that may occur to building products located nearby. The terminal must not be located in a place where it is likely to cause a nuisance (see fig. 4).

In cold and/or humid weather, water vapour may condense on leaving the terminal; the effect of such pluming must be considered.

If installed less than 2m above a pavement or platform to which people have access (including balconies or flat roofs) the terminal must be protected by a guard of durable material. The guard must be fitted centrally over the terminal. Refer to BS 5440 Part 1, when the terminal is 0.5 metres (or less) below plastic guttering or 1 metre (or less) below painted eaves.

3.5 AIR SUPPLY

The following notes are intended for general guidance only.

This appliance is a room-sealed, fan-flued boiler, consequently it does not require a permanent air vent for combustion air supply.

When installed in a cupboard or compartment, ventilation for cooling purposes is also not required.

3.6 WATER CIRCULATION

Detailed recommendations are given in BS 5449 Part 1 and BS 6798. The following notes are for general guidance only.

3.6.1 PIPEWORK

It is recommended that copper tubing to BS 2871 Part 1 is used in conjunction with soldered capillary joints.

Where possible pipes should have a gradient to ensure air is carried naturally to air release points and that water flows naturally to drain cocks.

Except where providing useful heat, pipes should be insulated to avoid heat loss and in particular to avoid the possibility of freezing. Particular attention should be paid to pipes passing through ventilated areas such as under floors, loft space, and void areas.

3.6.2 AUTOMATIC BY-PASS

The appliance has a built-in automatic by-pass, consequently there is no requirement for an external by-pass, however the design of the system should be such that it prevents boiler 'cycling'.

3.6.3 DRAIN COCKS

These must be located in accessible positions to facilitate draining of the appliance and all water pipes connected to the appliance. The drain cocks must be manufactured in accordance with BS 2879.

3.6.4 AIR RELEASE POINTS

These must be positioned at the highest points in the system where air is likely to be trapped. They should be used to expel trapped air and allow complete filling of the system.

3.6.5 EXPANSION VESSEL

The appliance has an integral expansion vessel to accommodate the increased volume of water when the system is heated. It can accept up to 8 litres of expansion from within the system, generally this is sufficient, however if the system has an unusually high water content, it may be necessary to provide additional expansion capacity (see 6.19).

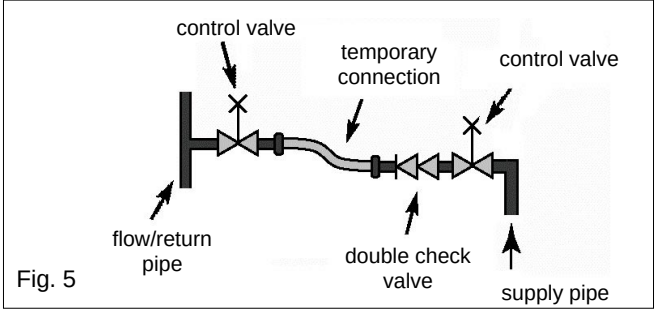

Fig. 5

3.6.6 FILLING POINT

A method for initial filling of the system and replacing water lost during servicing etc. must be provided. This method of filling must comply with the current Water Supply (Water Fittings) Regulations 1999 and Water Bylaws 2000 (Scotland). Fig. 5 shows an accepted method.

3.6.7 LOW PRESSURE SEALED SYSTEM

An alternative method of filling the system would be from an independent make-up vessel or tank mounted in a position at least 1 metre above the highest point in the system and at least 5 metres above the boiler (see fig. 5a)

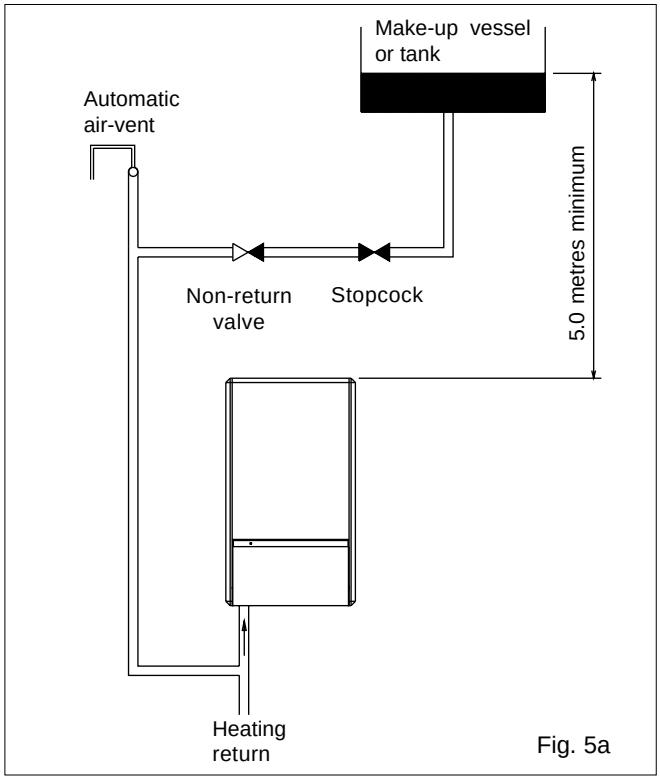

Fig. 5a

The cold feed from the make-up vessel or tank must be fitted with an approved non-return valve and stopcock for isolation purposes. The feed pipe should be connected to the return pipe as close to the boiler as possible.

3.6.8 FREQUENT FILLING

Frequent filling or venting of the system may be indicative of a leak. Care should be taken during the installation of the appliance to ensure all aspects of the system are capable of withstanding pressures up to at least 3 bar.

3.7 ELECTRICAL SUPPLY

The appliance is supplied for operation on 230V @ 50Hz electrical supply; it must be protected with a 3-amp fuse. The method of connection to the mains electricity supply must allow for complete isolation from the supply. The preferred method is by using a double-pole switch with a contact separation of at least 3mm. The switch must only supply the appliance and its corresponding controls, i.e. time clock, room thermostat, etc. Alternatively an un-switched shuttered socket with a fused 3-pin plug both complying with BS 1363 is acceptable.

3.8 SHOWERS

If the appliance is intended for use with a shower, the shower must be thermostatically controlled and be suitable for use with a combination boiler.

3.9 MOUNTING ON A COMBUSTIBLE SURFACE

If the appliance is to be fitted on a wall of combustible material, a sheet of fireproof material must protect the wall.

3.10 TIMBER FRAMED BUILDINGS

If the appliance is to be fitted in a timber framed building, it should be fitted in accordance with the Institute of Gas Engineers publication (IGE/UP/7) 'Guide for Gas Installations in Timber Frame Buildings'.

3.11 I NHIBITORS

We recommend that a neutral inhibitor is used to protect the heating system from the effects of corrosion and/or electrolytic action. The inhibitor must be administered in strict accordance with the manutfacturers* instructions.

*Fernox and Sentinel manufacture products that have proved suitable for use with this appliance. We cannot comment on the suitability of any other such product with our appliances.

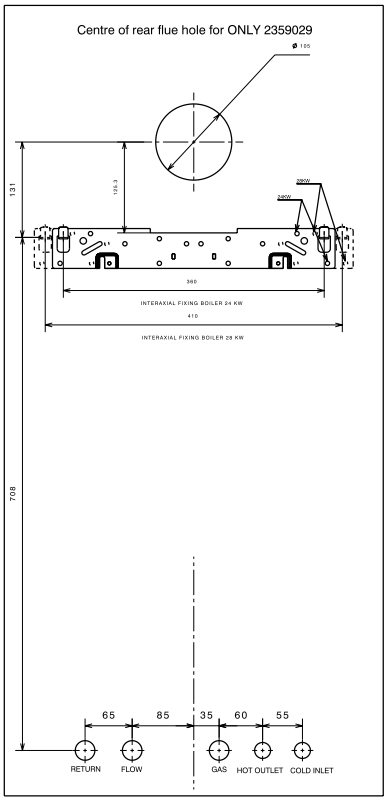

Fig. 6

SECTION 3A GENERAL REQUIREMENTS (EIRE)

This appliance must be installed by a competent person in accordance with and defined by, the Standard Specification (Domestic Gas Installations) Declaration (I.S. 813).

3A.1 RELATED DOCUMENTS

The installation of this boiler must be in accordance with the relevant requirements of the local building regulations, the current ETCI National Rules for Electrical Installations, and the bylaws of the local water undertaking.

It should be in accordance also with any relevant requirements of the local and/or district authority.

3A.2 LOCATION OF APPLIANCE

The appliance may be installed in any room or internal space, although particular attention is drawn to the requirements of the current ETCI National Rules for Electrical Installations, and I.S. 813, Annex K.

When an appliance is installed in a room or internal space containing a bath or shower, the appliance or any control pertaining to it must not be within reach of a person using the bath or shower.

The location chosen for the appliance must permit the provision of a safe and satisfactory flue and termination. The location must also permit an adequate air supply for combustion purposes and an adequate space for servicing and air circulation around the appliance. Where the installation of the appliance will be in an unusual location special procedures may be necessary, refer to I.S. 813 for detailed guidance on this aspect.

A compartment used to enclose the appliance must be designed and constructed specifically for this purpose. An existing compartment/cupboard may be utilised provided that it is modified to suit.

This appliance is not suitable for external installation.

3A.3 GAS SUPPLY

The gas meter – as supplied by the gas supplier – must be checked to ensure that it is of adequate size to deal with the maximum rated input of all the appliances that it serves. Installation pipes must be fitted in accordance with I.S. 813.

Pipe work from the meter to the appliance must be of adequate size. Pipes of a smaller size than the appliance gas inlet connection must not be used. The installation must be tested for soundness in accordance with I.S. 813.

If the gas supply serves more than one appliance, it must be ensured that an adequate supply is maintained to each appliance when they are in use at the same time.

3A.4 FLUE SYSTEM

The terminal should be located where the dispersal of combustion products is not impeded and with due regard for the damage and discoloration that may occur to building products located nearby. The terminal must not be located in a place where it is likely to cause a nuisance (see I.S. 813).

In cold and/or humid weather, water vapour may condense on leaving the terminal; the effect of such pluming must be considered.

If installed less than 2m above a pavement or platform to which people have access (including balconies or flat roofs) the terminal must be protected by a guard of durable material. The guard must be fitted centrally over the terminal. Refer to I.S. 813, when the terminal is 0.5 metres (or less) below plastic guttering or 1 metre (or less) below painted eaves.

3A.5 AIR SUPPLY

The following notes are intended for general guidance only.

This appliance is a room-sealed, fan-flued boiler, consequently it does not require a permanent air vent for combustion air supply.

When installed in a cupboard or compartment, ventilation for cooling purposes is also not required.

3A.6 WATER CIRCULATION

Specific recommendations are given in I.S. 813. The following notes are for general guidance only.

3A.6.1 PIPEWORK

It is recommended that copper tubing be used in conjunction with soldered capillary joints.

Where possible pipes should have a gradient to ensure air is carried naturally to air release points and that water flows naturally to drain cocks.

Except where providing useful heat, pipes should be insulated to avoid heat loss and in particular to avoid the possibility of freezing. Particular attention should be paid to pipes passing through ventilated areas such as under floors, loft space, and void areas.

3A.6.2 AUTOMATIC BY-PASS

The appliance has a built-in automatic by-pass, consequently there is no requirement for an external by-pass, however the design of the system should be such that it prevents boiler 'cycling'.

3A.6.3 DRAIN COCKS

These must be located in accessible positions to facilitate draining of the appliance and all water pipes connected to the appliance.

3A.6.4 AIR RELEASE POINTS

These must be positioned at the highest points in the system where air is likely to be trapped. They should be used to expel trapped air and allow complete filling of the system.

3A.6.5 EXPANSION VESSEL

The appliance has an integral expansion vessel to accommodate the increased volume of water when the system is heated. It can accept up to 8 litres of expansion from within the system, generally this is sufficient, however if the system has an unusually high water content, it may be necessary to provide additional expansion capacity (see 6.19).

3A.6.6 FILLING POINT

A method for initial filling of the system and replacing water lost during servicing etc. has been provided. You should ensure this method of filling complies with the local water authority regulations.

3A.6.7 LOW PRESSURE SEALED SYSTEM

An alternative method of filling the system would be from an independent make-up vessel or tank mounted in a position at least 1 metre above the highest point in the system and at least 5 metres above the boiler (see fig. 5).

The cold feed from the make-up vessel or tank must be fitted with an approved non-return valve and stopcock for isolation purposes. The feed pipe should be connected to the return pipe as close to the boiler as possible.

3A.6.8 FREQUENT FILLING

Frequent filling or venting of the system may be indicative of a leak. Care should be taken during the installation of the appliance to ensure all aspects of the system are capable of withstanding pressures up to at least 3 bar.

3A.7 ELECTRICAL SUPPLY

The appliance is supplied for operation on 230V @ 50Hz electrical supply; it must be protected with a 3-amp fuse. The method of connection to the mains electricity supply must allow for complete isolation from the supply. The preferred method is by using a double-pole switch with a contact separation of at least 3mm. The switch must only supply the appliance and its corresponding controls, i.e. time clock, room thermostat, etc.

3A.8 SHOWERS

If the appliance is intended for use with a shower, the shower must be thermostatically controlled and be suitable for use with a combination boiler.

3A.9 MOUNTING ON A COMBUSTIBLE SURFACE

If the appliance is to be fitted on a wall of combustible material, a sheet of fireproof material must protect the wall.

3A.10 TIMBER FRAMED BUILDINGS

If the appliance is to be fitted in a timber framed building, it should be fitted in accordance with I.S. 813 and local Building Regulations.

The Institute of Gas Engineers publication (IGE/UP/7) 'Guide for Gas Installations in Timber Frame Buildings' gives specific advice on this type of installation.

3A.11 INHIBITORS

We recommend that a neutral inhibitor is used to protect the heating system from the effects of corrosion and/or electrolytic action. The inhibitor must be administered in strict accordance with the manufacturers* instructions.

*Fernox and Sentinel manufacture products that have proved suitable for use with this appliance. We cannot comment on the suitability of any other such product with our appliances.

3A.12 DECLARATION OF CONFORMITY

A Declaration of Conformity (as defined in I.S. 813) must be provided on completion of the installation.

A copy of the declaration must be given to the responsible person and also to the gas supplier if required.

4.1 DELIVERY

The appliance is delivered in a heavy-duty cardboard carton. Lay the carton on the floor with the writing the correct way up.

4.2 CONTENTS

Contained within the carton is:

- the boiler
- the wall mounting bracket
- an accessories pack containing service valves and sealing washers
- the instructions pack containing installation & servicing instructions, appliance logbook, user instructions, guarantee registration card, 3 amp fuse and flue restrictor ring.

4.3 UNPACKING

At the top of the carton pull both sides open – do not use a knife – unfold the rest of the carton from around the appliance, carefully remove all protective packaging from the appliance, and lay the accessories etc. to one side. Protective gloves should be used to lift the appliance, the appliance back-frame should be used for lifting points.

4.4 PREPARATION FOR MOUNTING THE APPLIANCE

The appliance should be mounted on a smooth, non-combustible, vertical surface, which must be capable of supporting the full weight of the appliance. Care should be exercised when determining the position of the appliance with respect to hidden obstructions such as pipes, cables, etc.

When the position of the appliance has been decided – using the template supplied – carefully mark the position of the wall bracket (fig. 6) and flue-hole (if applicable).

4.4.1 IMPORTANT

Please read these instructions carefully to ensure correct and safe operation of the appliance

4.4.2 FLUE RESTRICTOR RING

To ensure maximum efficiency and correct operation of the appliance, it may be necessary to fit one of the supplied flue restrictor rings to the appliance flue outlet (see tables below).

Sabre 24

Total flue length	Restrictor required
Less than 1 metre	42mm diameter
Less than 2 metres	44mm diameter
Less than 3 metres	46mm diameter
Less than 4.25 metres	Not required

Sabre 28

Total flue length	Restrictor required
Less than 0.75 metre	45mm diameter
Less than 1.70 metres	47mm diameter
Less than 2.70 metres	49mm diameter
Less than 3.40 metres	Not required

4.5 FITTING THE FLUE

The top flue outlet permits the appliance to be used for horizontal or vertical – concentric – applications without having to carry out any conversion of the appliance.

4.5.1 CONCENTRIC HORIZONTAL FLUE

The appliance flue outlet can be rotated through 360 on its vertical axis. In addition the flue may be extended from the outlet bend in the horizontal plane (see 2.9). However if additional bends are used, a reduction must be made to the maximum length (see table).

Reduction for additional bends

Bend	Reduction in maximum flue length for each bend
45º bend	0.5 metre
90º bend	0.85 metre

Horizontal flue terminals and accessories

Part No.	Description	Min-Max Length
2359029	Standardl flue kit For use with add. Bends & extensions	833 mm (dimension '**X**')
2359119	Telescopic flue kit. For use with add. Bends and extensions	
2359069	750 mm extension	750 mm
2359079	1500 mm extension	1500 mm
2359089	Telescopic extention	350-490 mm
2359049	45º bend (pair)	N/A
2359059	90º bend	N/A
0225760	Wall bracket (5)	N/A

Using the template provided, mark and drill a 105mm hole for the passage of the flue pipe. The hole should have a 1º drop from the boiler to outside, to eliminate the possibility of rainwater entering the appliance via the flue.

The fixing holes for the wall-mounting bracket should now be drilled and plugged, an appropriate type and quantity of fixing should be used to ensure that the bracket is mounted securely. Once the bracket has been secured to the wall, mount the appliance onto the bracket.

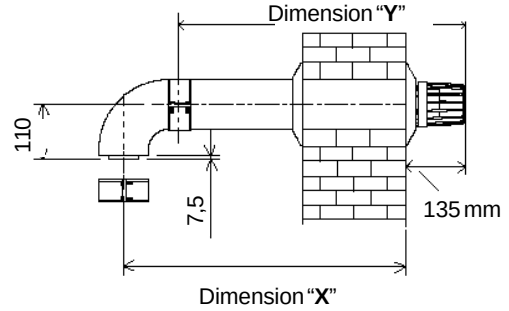

Fig. 7

4.5.1.1 FITTING THE HORIZONTAL FLUE KIT (see 4.5.1)

Carefully measure the distance from the centre of the appliance flue outlet to the face of the outside wall (dimension 'X' see fig. 7). Ensure the inner (60mm) pipe is fully inserted into the outer (100mm) pipe (when the inner pipe is fully inserted, it stands proud of the outer pipe by 7.5mm). Add 32mm to dimension 'X' to give the overall flue length (dimension 'Y').

NOTE

The standard horizontal flue kit (part no. 2359029) is suitable for a distance (dimension 'Y') of up to 865mm.

The telescopic flue kit (part no. 2359119) is suitable for a distance (dimension 'Y') of up to 600mm.

Dimension 'Y' is measured from the end of the terminal to the end of the outer (100mm) pipe.

The internal trim should be fitted to the flue pipe before connection of the 90º bend.

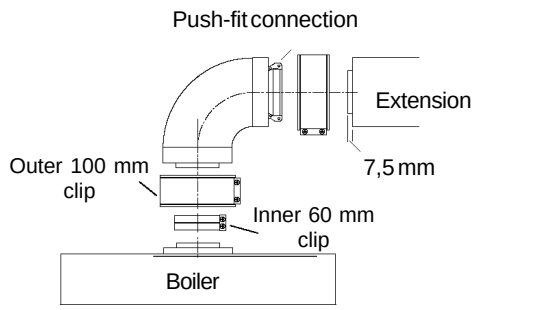

Fig. 8

If the horizontal flue kit (2359029) requires to be cut to the correct size (dimension 'Y'), you must ensure that the inner (60mm) pipe stands proud of the outer (100mm) pipe by 7.5mm (see fig. 8). Ensure any burrs are filed or removed and that any seals are located properly before assembly.

The telescopic flue terminal should be adjusted to the appropriate length and then fixed using the securing screw supplied.

4.5.1.2 STANDARD FLUE KIT (2359029)

Hold the inner (60mm) pipe of the terminal assembly and connect to the push-fit end of the 90º bend (supplied) using a twisting action. Insert the assembled flue into the previously drilled hole. Using the clips & screws supplied, connect the flue assembly to the boiler, ensuring that the terminal protrudes past the finished outside wall by the correct length (135mm).

4.5.1.3 TELESCOPIC FLUE KIT (2359119)

Connect the 60mm push-fit connection of the flue bend (supplied) to the telescopic flue assembly using a twisting action. Insert the assembled flue into the previously drilled hole. Using the clips & screws supplied, connect the flue assembly to the boiler, ensuring that the terminal protrudes past the finished outside wall by the correct length (135mm).

You must ensure that the entire flue system is properly supported and connected.

Seal the flue assembly to the wall using cement or a suitable alternative that provides satisfactory weatherproofing. The exterior trim can now be fitted.

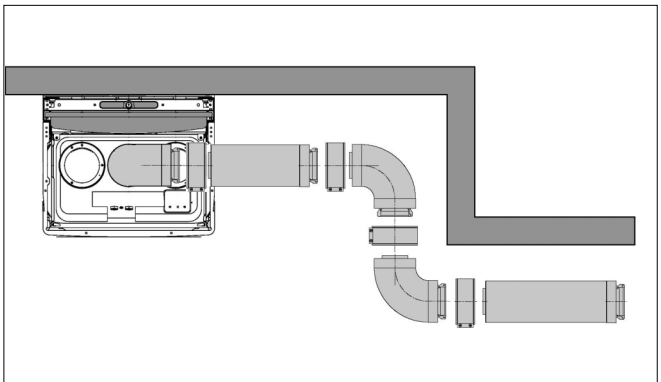

Fig. 8a

4.5.1.4 EXTENDING THE HORIZONTAL FLUE

The horizontal flue system can be extended using bends and/or extensions (see 4.5.1).

Connect the bend – supplied with the terminal kit – to the top of the boiler using the clips, screws, & gaskets supplied. The additional bends & extensions have an internal push-fit connection, care should be taken to ensure that the correct seal is made when assembling the flue system. Connect the required number of flue extensions or bends (up to the maximum equivalent flue length) to the flue terminal using the clips, screws, & gaskets supplied (see fig. 8 & 8A). The interior trim should be fitted at this point.

NOTE

When cutting an extension to the required length, you must ensure that the excess is cut from the plain end of the extension, and that the inner (60mm) pipe is 7.5mm longer than outer (100mm) pipe (see fig. 8 & 8A). Remove any burrs, and check that any seals are located properly.

You must ensure that the entire flue system is properly supported and connected.

Seal the flue assembly to the wall using cement or a suitable alternative that will provide satisfactory weatherproofing. The exterior trim can now be fitted.

4.5.2 CONCENTRIC VERTICAL FLUE

The vertical flue terminal can be connected directly to the appliance flue outlet. Alternatively, an extension or bend can be connected to the appliance flue outlet if desired (see 2.9), however if additional bends are fitted, a reduction must be made to the maximum flue length (see table).

Bend	Reduction in maximum flue length for each bend
45° bend	0.5 metre
90° bend	1.0 metre

Vertical flue terminal and accessories

Part No.	Description	Length
2359039	Vertical flue terminal	1.0 metre
0225770	Pitched roof flashing plate	N/A
0225765	Flat roof flashing plate	N/A
2359069	750 mm extension	750 mm
2359079	1500 mm extension	1500 mm
2359049	45º bend (pair)	N/A
2359059	90º bend	N/A
0225760	Wall bracket (5)	N/A

Using the dimensions given in fig. 9 as a reference, mark and cut a 105mm hole in the ceiling and/or roof.
Fit the appropriate flashing plate to the roof and insert the vertical flue terminal through the flashing plate from the outside, ensuring that the collar on the flue terminal fits over the flashing.
The fixing holes for the wall-mounting bracket should now be drilled and plugged, an appropriate type and quantity of fixing should be used to ensure that the bracket is mounted securely. Once the bracket has been secured to the wall, mount the appliance onto the bracket.

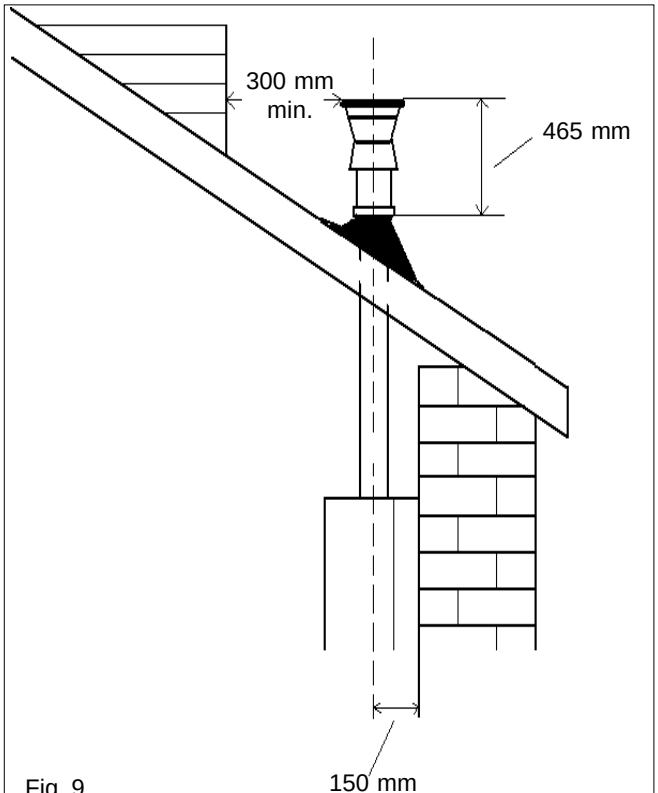

Fig. 9

IMPORTANT
The vertical flue terminal is 1.0 metre in length and cannot be cut; therefore it may be necessary to adjust the height of the appliance to suit or use a suitable extension.
Connect the vertical flue assembly to the boiler flue spigot using the 60mm & 100mm clips, gaskets, & screws (supplied), ensuring the correct seal is made. The flue support bracket (supplied with the vertical flue kit) can now be fitted.

If the vertical flue requires extension/s or additional bend/s, connect the required number of flue extensions or bends (up to the maximum equivalent flue length) between the boiler and vertical flue assembly (see fig. 8).

NOTE
When cutting an extension to the required length, you must ensure that the excess is cut from the plain end of the extension and that the inner (60mm) pipe is 7.5mm longer than outer (100mm) pipe (see fig. 8). Remove any burrs, and check that any seals are located properly.

You must ensure that the entire flue system is properly supported and connected.

4.6 CONNECTING THE GAS AND WATER

The appliance is supplied with an accessories pack that contains large and small sealing washers, service valves, and pipe connections.
The service valves are of the compression type, the pipe connections have plain copper ends. When connecting pipework to the valves or connections, tighten the compression end first, then insert the sealing washers before tightening the valve or connection to the appliance. It will be necessary to hold the valve or connection with one spanner whilst tightening with another.

4.6.1 GAS (fig. 6)

The appliance is supplied with a 15 mm service valve, connect a 15 mm pipe to the inlet of the valve, and tighten both nuts.

NOTE
It will be necessary to calculate the diameter of the gas pipe to ensure the appliance has an adequate supply of gas.

4.6.2 FLOW & RETURN (fig. 6)

The appliance is supplied with 22 mm service valves for the heating connections, connect 22 mm pipe to the inlet of each valve and tighten both nuts.

4.6.3 SAFETY VALVE (fig. 6)

The appliance is supplied with a 15 mm compression coupling. Connect a 15 mm pipe to the coupling and tighten. It may be necessary to fit a non-return valve if the installation is subject to mains knock, in order to eliminate false activation of the domestic hot water flow switch.

4.6.4 COLD WATER INLET (fig. 6)

The appliance is supplied with a 15mm stopcock, connect a 15mm service pipe to the inlet of the service valve and tighten both nuts. It may be necessary to fit a pressure reducing valve if the installation is subject high-pressure fluctuations or high pressure surges.

4.6.5 HOT WATER OUTLET (fig. 6)

The appliance is supplied with a 15 mm copper tail, connect a 15 mm pipe and suitable coupling to the tail and tighten. The discharge pipe must have a continuos fall away from the boiler to outside and allow any water to drain away thereby eliminating the possibility of freezing. The discharge pipe must terminate in a position where any water – possibly boiling – discharges safely without causing damage or injury, but is still visible.

4.7 ELECTRICAL CONNECTIONS

The electrical supply must be as specified in 3.7/ 3.7a. The appliance is supplied, pre-wired with a 1-metre length of flex. Should the supplied flex be unsuitable or insufficient see 4.8.3. other wise connect the wires as follows:

- Connect the Brown wire to the L (Live) terminal of the plug or fused isolator.
- Connect the Blue wire to the N (Neutral) terminal of the plug or fused isolator.
- Connect the Green/Yellow wire to the E (Earth) terminal of the plug or isolator.
- Ensure the plug or fused isolator is fitted with a 3AMP fuse.

If this method of connection is unsuitable, please refer to section 4.7.3 and section 8. A qualified electrician should connect the electrical supply to the appliance. The electrical supply must be as specified in Section 3.7/3.7a. A qualified electrician should connect the electrical supply to the appliance. If controls – external to the appliance – are required, a competent person must undertake the design of any external electrical circuits, please refer to Section 8 for detailed instructions. ANY EXTERNAL CONTROL OR WIRING MUST BE SERVED FROM THE SAME ISOLATOR AS THAT OF THE APPLIANCE. The supply cable from the isolator to the appliance must be 3-core flexible sized 0.75mm to BS 6500. Wiring to the appliance must be rated for operation in contact with surfaces up to 90ºC.

4.7.1 CASING REMOVAL

To gain access to the appliance electrical connections you must first remove the casing, proceed as follows:

- Locate and remove the 3 screws that secure the outer casing to the appliance (see fig 10).
- Gently pull one side of the casing then the other to disengage it from the retaining clips.
- Lift the casing upward to disengage it from the top locating hooks and then remove.
- Store the casing and screws safely until required. Re-fit in the reverse order.

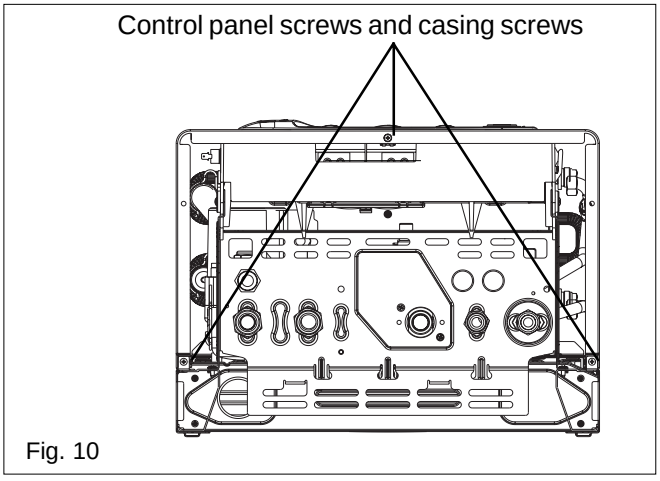

Fig. 10

4.7.2 ELECTRICAL CONNECTION

The appliance terminal strip is located behind the control fascia (see fig. 11). Locate and remove the 4 screws securing the control PCB cover.

NOTE

The appliance comes with a factory fitted link to allow basic operation of the boiler via the built-in clock. If it is anticipated that external controls will be required please refer to the wiring diagrams in section 8 for more detailed information.

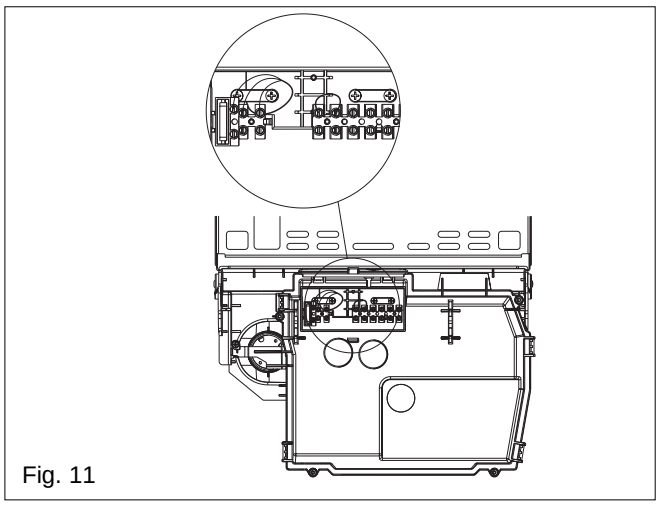
Fig. 11

4.7.3 CONNECTING THE MAINS (230V) INPUT (see fig. 12)

Remove the control PCB cover as described in 4.7.2. Disconnect, remove, and discard the supplied flex. Pass the (new) supply cable through the cable anchorage (see fig.10). Connect the supply cable wires (earth, live, and neutral) to their corresponding terminals on the terminal strip (see fig 12). Ensure that the EARTH wire is left slightly longer that the others, this will prevent strain on the Earth wire should the cable become taut.

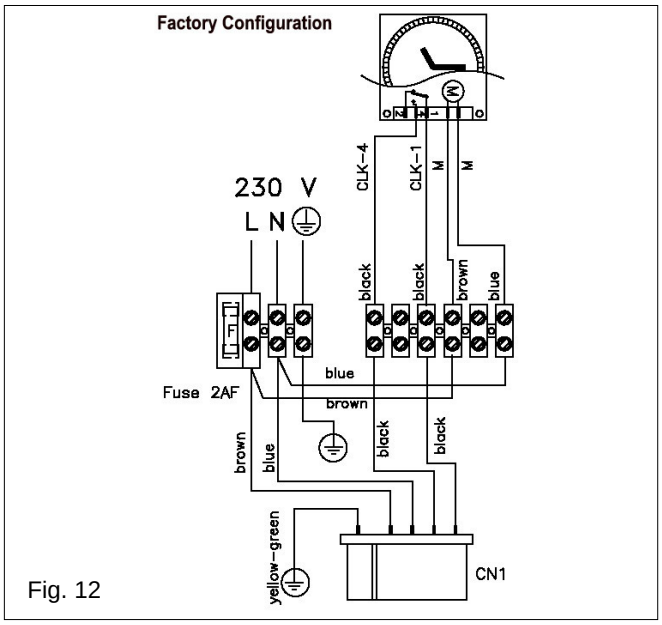

Fig. 12

Do not interfere with any other wiring (fig 12) unless additional external controls are to be fitted (see section 8). Re-fit the electrical input board cover.

The securing screw on the cable anchorage should now be tightened. This must be done before the control fascia is re-fitted in the upright position. The appliance casing and screws can now be re-fitted.

5.1 GAS SUPPLY INSTALLATION

Inspect the entire installation including the gas meter, test for soundness and purge.

5.2 THE HEATING SYSTEM

The appliance contains components that may become damaged or rendered inoperable by oils and/or debris that are residual from the installation of the system, consequently it is essential that the appliance is flushed in accordance with the following instructions.

5.3 INITIAL FILLING OF THE SYSTEM

Ensure both flow and return service valves are open, remove appliance casing as described in section 4.7.1, identify the automatic air release valve, and loosen the dust cap by turning cap anti-clockwise one full turn. IMPORTANT, THERE ARE NO MANUAL AIR RELEASE VALVES LOCATED ON THE APPLIANCE. Ensure all manual air release valves located on the heating system are closed. Using the method of filling as described in fig. 5, slowly proceed to fill the system, as water enters the system the pressure gauge will begin to rise, once the gauge has reached 1 bar close the filling valve and begin venting all manual air release valves, starting at the lowest first. It may be necessary to go back and top-up the pressure until the entire system has been filled. Inspect the system for water soundness, rectifying any leaks.

5.4 INITIAL FLUSHING

The whole of the heating system must be flushed both cold and hot as detailed in section 5.9. open all radiator or heating valves and the appliance central heating valves. Drain the boiler and system from the lowest points. Open the drain valve full bore to remove any installation debris from the boiler prior to lighting. Refill the boiler and heating system as described in section 5.3.

5.5 FILLING THE HOT WATER SYSTEM

Close all hot water outlets, turn appliance stopcock on (anti-clockwise), slowly open each outlet until all air has been expelled and clear water is discharged. Check pipe-work etc. for water soundness.

5.6 PRE-OPERATION CHECKS

Before attempting the initial lighting of the appliance, the following checks must be carried out:

- Ensure all gas service valves from the meter to the appliance are open and the supply pipe has been properly purged.
- Ensure the proper electrical checks have been carried out (section 7.11), particularly continuity, polarity and resistance to earth.
- Ensure the 3-amp fuse – supplied with the appliance – has been fitted.
- Ensure the system has been filled, aired, and the pressure set to 1bar.
- Ensure the flue has been fitted properly and in accordance with the instructions.
- Ensure all appliance service valves are open.

5.7 INITIAL LIGHTING

Ensure the electrical supply to the appliance is switched on. Switch the time clock or programmer to an 'on' position and ensure all external controls are also calling for heat.

The appliance will now operate in as described in section 1.2. Should the appliance fail to ignite, refer to section 5.6 and/or section 7 (fault finding).

5.8 CHECKING BURNER PRESSURES

Although burner pressures are set at the factory, it is necessary to check them during the commissioning procedure. Isolate the appliance from the electrical supply and remove the casing as described in section 4.7.1.

After attaching a manometer to the outlet test point of the gas valve (fig. 22), restore the electrical supply to the appliance, turn the selector to hot water only (summer position), and rotate the DHW temperature selector to maximum.

Maximum burner pressure

Fully open a hot water outlet – preferably the bath tap – and check that reading on the manometer corresponds to the data given in section 2.3.

Minimum burner pressure

After checking the maximum burner pressure, remove one of the black wires from the modulating coil on the gas valve. The burner pressure will drop to the minimum setting. Check that the reading on the manometer corresponds with the data given in section 2.3.

Once the gas pressures have been checked:

- isolate the appliance from the electrical supply
- close the hot water outlet
- remove the manometer from the outlet test point and tighten the test point screw
- refit the appliance casing.

Should either the maximum or minimum burner pressure require to be adjusted, refer to section 7.6 for the correct adjustment procedure.

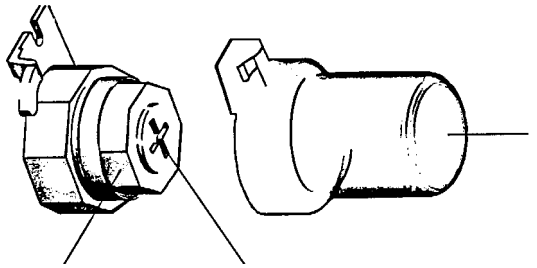

Fig. 13

5.9 FINAL FLUSHING OF THE HEATING SYSTEM

The system shall be flushed in accordance with BS 7593. If a cleanser is to be used, it shall be from a reputable manufacturer* and shall be administered in strict accordance with the manufacturers instructions.

*Both Sentinel and Fernox manufacture products that have proved suitable for use with our appliances. We cannot comment on the suitability of any other such product with our appliances.

5.9.1 INHIBITORS

See section 3 “General requirements”.

5.10 SETTING THE FLOW TEMPERATURE

The heating flow temperature selector can be adjusted from a minimum of 40 ˚C, to a maximum of 82 ˚C. In addition, when the selector is rotated to the **Auto** position, the appliance will automatically adjust the outlet flow temperature to compensate for inclement weather

Flow temperature selection

Sector	Range
Low sector	40° - 50°C
Auto sector	55° - 65°C*
High sector	65° - 82°C

*When the selector is left within this range, the appliance will automatically raise the outlet temperature during cold or inclement weather conditions

5.11 SETTING THE SYSTEM DESIGN PRESSURE

The design pressure should be I minimum of 1 bar and a maximum of 1.5 bar.

The actual reading should ideally be 1 bar plus the equivalent height in metres to the highest point in the system above the base of the appliance. (Up to the maximum of 1.5 bar total).

N.B. The safety valve is set to lift at 3 bar/ 30m/ 45psig.

To lower the system pressure to the required value, pull lever on head of safety valve to release water until the required figure registers on the pressure gauge (fig.1).

5.12 REGULATING THE CENTRAL HEATING SYSTEM

Fully open all radiator and circuit valves and run the appliance in the central heating mode until heated water is circulating. If conditions are warm remove any thermostatic valve heads. Adjust radiator return valves and any branch circuit return valves until the individual return temperatures are correct and are approximately equal.

5.13 REGULATING THE DOMESTIC HOT WATER

The appliance is supplied with a built-in flow restrictor that limits the amount of water passing through the heat exchanger, thereby ensuring a reasonable temperature at the outlet.

The outlet temperature can also be adjusted via the DHW temperature selector.

If the required outlet temperature cannot be obtained by rotating the DHW temperature selector to its maximum setting, the adjustable stopcock should be used to limit the available flow rate at the outlet. Slowly turn the adjustable stopcock clockwise until a satisfactory temperature is obtained.

Please note that it’s prudent to set the domestic hot water outlet temperature at the lowest acceptable temperature, as higher temperatures can be realised by reducing the flow rate at the individual hot water outlets.

NOTE

The appliance will light to provide hot water when the domestic hot water flow switch senses a flow rate of 2.0 litres –per minute – or more.

5.14 FINAL CHECKS

- ENSURE ALL TEST NIPPLES ON THE APPLIANCE GAS VALVE ARE TIGHT AND HAVE BEEN CHECKED FOR SOUNDNESS.
- ENSURE THE APPLIANCE FLUE SYSTEM IS FITTED CORRECTLY AND IS PROPERLY SECURED.
- ENSURE ALL PIPE WORK IS RE-CHECKED FOR SOUNDNESS.
- RE-FIT APPLIANCE CASING.
- COMPLETE APPLIANCE LOGBOOK.

Complete details of the boiler, controls, installation, and commissioning in the logbook supplied with the boiler. This is an important document, which must be correctly completed and handed to the user. Failure to install and commission the appliance to the manufacturers instructions may invalidate the warranty.

5.15 INSTRUCTING THE USER

Hand over all documentation supplied with this appliance – including these instructions – and explain the importance of keeping them in a safe place.

Explain to the user how to isolate the appliance from the gas, water, and electricity supplies, and the locations of all drain points.

Show the user how to operate the appliance and

Show the user the position of the filling valve and how to top-up the system pressure correctly, and show the location of all manual air release points.

Explain to the user how to turn off the appliance for both long and short periods, and advise on the necessary precautions to prevent frost damage.

Explain to the user that for continued safe and efficient operation, the appliance must be serviced annually by a competent person.

6.1 GENERAL

To ensure the continued safe and efficient operation of the appliance, it is recommended that it is checked and serviced at regular intervals.

The frequency of servicing will depend upon the particular installation conditions, but in general, once per year should be adequate.

It is the law that any servicing work is carried out by competent person such as an approved service agent, British Gas, or other CORGI registered personnel.

The following instructions apply to the appliance and its controls, but it should be remembered that the central heating system will also require attention from time to time.

Always use genuine spare parts

6.2 ROUTINE ANNUAL SERVICING

Check the operation of the appliance in both 'hot water only' and 'heating and hot water' modes. Ensure the appliance functions as described in section 7. Compare the performance of the appliance with its design specification. The cause of any noticeable deterioration should be identified and rectified without delay.

Thoroughly inspect the appliance for signs of damage or deterioration especially the flue system and the electrical apparatus.

Check and adjust – if necessary – all burner pressure settings (see section 7.6).

Check and adjust – if necessary – the system design pressure (see section 5.11).

Carry out an analysis of the flue gases (see section 7.7), and visually check the condition of the entire flue assembly. Compare the results with the appliance design specification. Any deterioration in performance must be identified and rectified without delay.

Ensure both flue venturis are clean and free from any debris or obstruction.

Ensure both the burner and heat exchanger are clean and free from any debris or obstruction.

Inspect all joints for signs of leakage and repair if necessary.

Refer to the commissioning section and/or replacement of parts section for detailed instruction if required.

6.3 REPLACEMENT OF COMPONENTS

Although it is anticipated that this appliance will give years of reliable, trouble free service, the life span of components will be determined by factors such as operating conditions and usage. Should the appliance develop a fault, the fault finding section will assist in determining which component is malfunctioning.

6.4 MAIN HEAT EXCHANGER (de-scaling)

The main heat exchanger may – when operating under certain conditions – become affected by scaling. Evidence of this will be a deterioration of the hot water performance. The heat exchanger can be de-scaled using a proprietary de-scalant without having to remove it from the appliance. However the appliance must be disconnected from the hot and cold service pipes, the de-scalant should be administered with strict adherence to the manufacturers instructions. Reconnect the hot and cold services only after thorough flushing with clean water has taken place.

6.5 COMPONENT REMOVAL PROCEDURE

To remove a component, access to the interior of the appliance is essential. Isolate the appliance from the electrical supply and remove the fuse. And when necessary, close all service valves on the appliance, remove the appliance casing as described in section 4.7.1, drain the primary water content from the appliance via the safety valve, and drain off secondary water content from the appliance via a hot water outlet. Ensure some water absorbent cloths are available to catch any residual water that may drip from the appliance or removed component. Undertake a complete commissioning check as detailed in section 5, after replacing any component. ALWAYS TEST FOR GAS SOUNDNESS IF ANY GAS CARRYING COMPONENTS HAVE BEEN REMOVED OR DISTURBED.

6.6 PUMP HEAD fig. 14

Carry out component removal procedure as described in section 6.5.

Using a 4 mm Allen key or 'T' bar, unscrew and remove the four Allen screws that hold the pump in position, pull firmly on the pump head to release it from the base. Disconnect the electrical leads. Replace in the reverse order.

6.7 SAFETY VALVE fig. 14

Carry out component removal procedure as described in 6.5.

Disconnect the outlet pipe from the safety valve, unscrew and remove the hex bush from the safety valve outlet, remove safety valve locking pin from appliance manifold. Replace in the reverse order

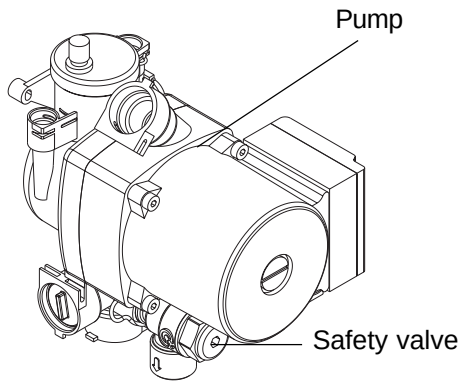

Fig. 14

6.8 AUTOMATIC AIR RELEASE VALVE (AAV, fig. 15)

Carry out component removal procedure as described in 6.5.

Remove the locking pins at the pump outlet, and the flow & return connection of the heat exchanger, disconnect both pipes from the heat exchanger, and remove the return pipe from the pump outlet. Remove the locking pin and expansion pipe from the pump base. Using a suitable pair of pliers, unscrew the AAV from the pump base. Replace in the reverse order.

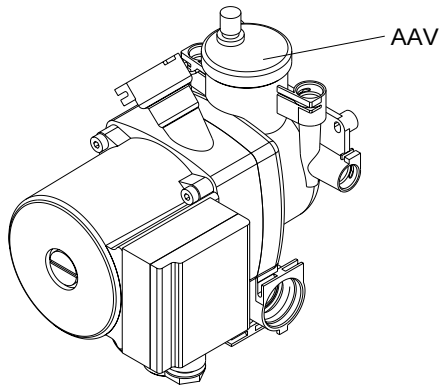

Fig. 15

6.9 WATER PRESSURE SWITCH fig. 16

Carry out component removal procedure as described in 6.5.

Remove locking pin from heating flow pipe at the heating manifold and withdraw the pipe from the manifold. Remove locking pin and the water pressure switch from the heating manifold, pull back protective cover – and after taking note of the electrical connections – disconnect the wiring. Replace in the reverse order.

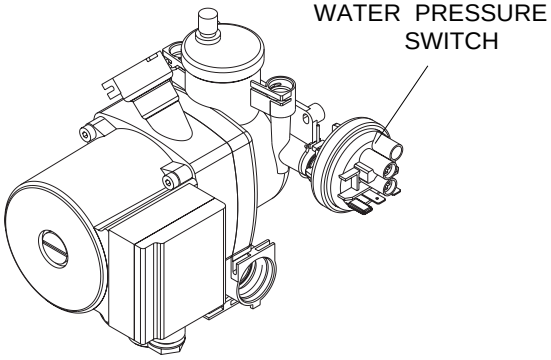

Fig. 16

6.10 DOMESTIC WATER FLOW SWITCH fig. 17

Carry out component removal procedure as described in 6.5.

Remove black electrical plug from the domestic water flow switch, disconnect and remove inlet pipe between the domestic water flow switch and the heat exchanger, remove locking pin from the domestic water flow switch, the switch can now be removed from the appliance. Replace in the reverse order.

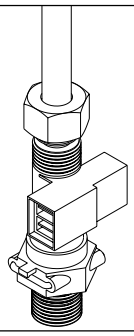

Fig. 17

6.11 PRESSURE GAUGE (fig. 1)

Carry out component removal procedure as described in 6.5.

Remove pressure gauge locking pin, located on pump base, and withdraw the pressure gauge pipe, locate the spring tabs on the pressure gauge body, push and hold tabs in, to enable extraction of the gauge from its location. Replace in the reverse order.

6.12 PRIMARY AND SECONDARY THERMISTORS (fig. 18-19)

Carry out component removal procedure as described in 6.5.

Pull back protective rubber cover from the thermistor, disconnect thermistor electrical plug, using a 13 mm spanner slacken and remove the thermistor and sealing washer. Replace in the reverse order.

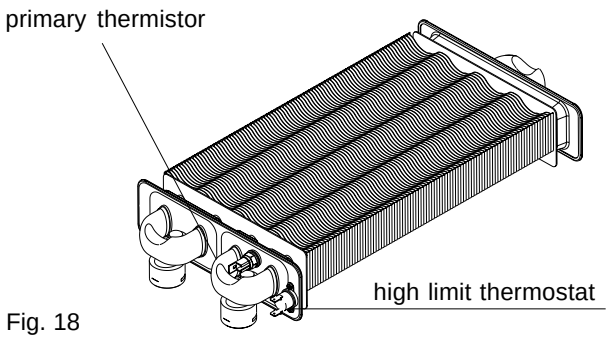

Fig. 18

6.13 HIGH LIMIT THERMOSTAT fig. 18

Carry out component removal procedure as described in 6.5.

Pull off electrical plug from the high limit thermostat, slacken and remove retaining screws. Replace in reverse order.

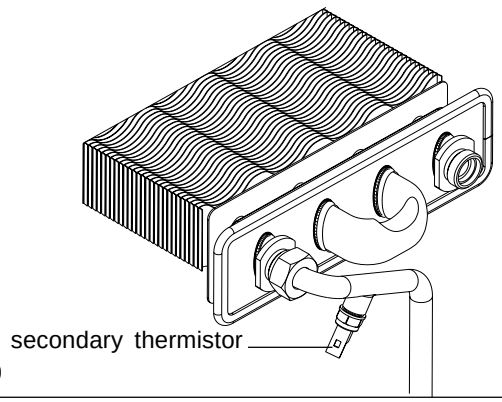

Fig. 19

6.14 PRINTED CIRCUIT BOARD (PCB, fig. 20)

Carry out component removal procedure as described in section 6.5.

Remove the PCB cover, after carefully taking note off all wiring connections, disconnect all wiring from the PCB, locate and remove the PCB securing screws, remove PCB. Replace in the reverse order.

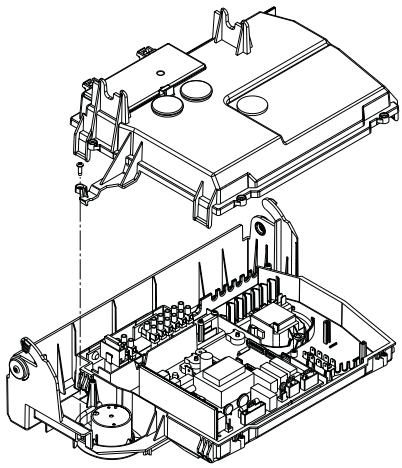

Fig. 20

6.15 INTEGRAL TIME SWITCH (fig. 21)

Carry out component removal procedure as described in 6.5.

Remove the PCB cover, locate and remove the time clock retaining screws, remove time clock after carefully taking note off all wiring connections. Replace in the reverse order.

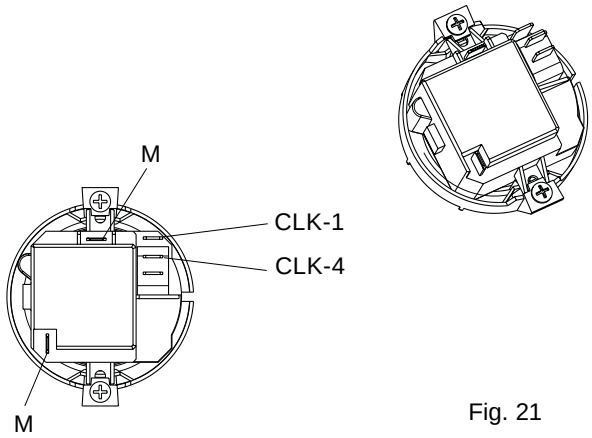

Fig. 21

6.16 GAS VALVE fig. 22

Carry out component removal procedure as described in section 6.5.

The gas valve must be changed as complete unit. Disconnect both electrical plugs from the gas valve, disconnect silicone tube from gas valve regulator, slacken and unscrew gas valve inlet and outlet connections, please note, the sealing washers must be discarded and replaced with new sealing washers, locate and remove gas valve retaining screws on the underside of the boiler, the gas valve can now be removed. Replace in the reverse order. Check and adjust burner pressure settings. WARNING, A GAS SOUNDNESS CHECK MUST BE CARRIED OUT.

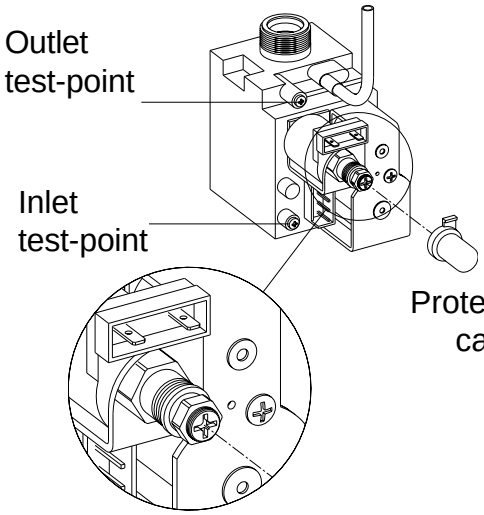

Fig. 22

6.17 BURNER, INJECTORS AND SPARK/SENSE ELECTRODE (fig. 23 & 24)

Carry out component removal procedure as described in 6.5.

Remove outer combustion cover by un-clipping the two retaining clips located at the base of the combustion cover, gently pull the cover towards you before lifting and disengaging it from the top retaining lugs. Locate and remove the two screws at the base of the inner combustion cover, pull the cover towards you before lifting and disengaging it from the top retaining lugs.

Disconnect both the electrode lead from its connector at the top of the control fascia, and the electrode earth lead from the spade connector on the appliance frame. Locate and remove the four screws which secure the burner in position, gently ease the burner out of its location whilst also easing the electrode sealing grommet from its location.

Once the burner has been removed, locate the burner injectors – located to the rear of the combustion chamber – and remove. Replace in the reverse order. Please note, the injector sealing washers must be replaced if the injectors have been removed, ensure all seals are in good condition, taking care to ensure they are replaced correctly.

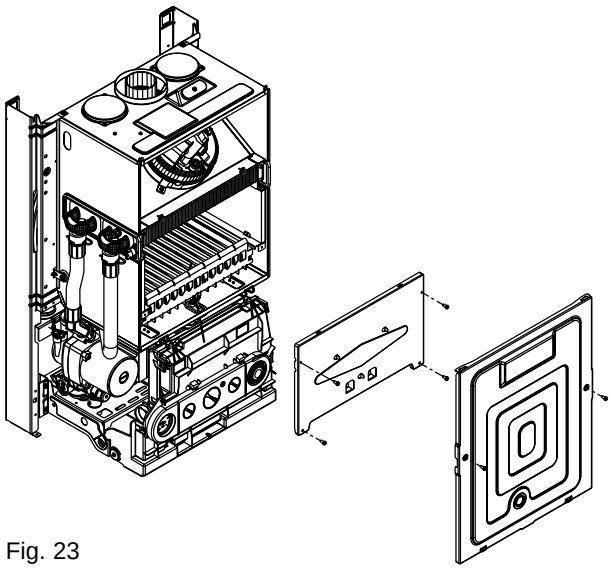

Fig. 23

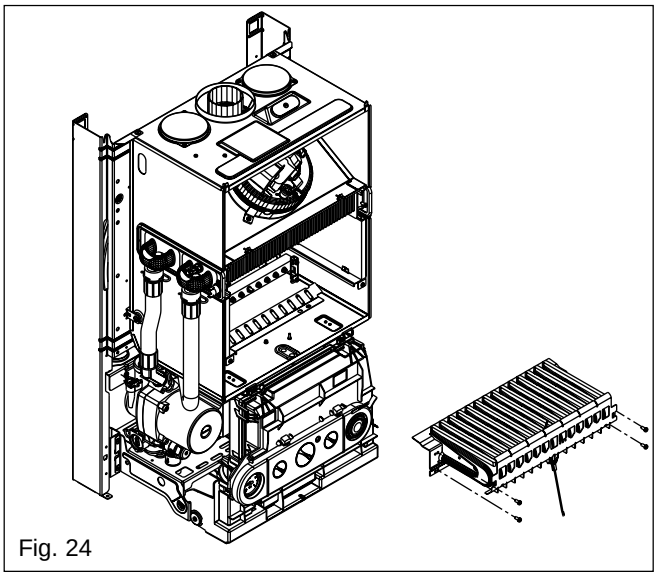

Fig. 24

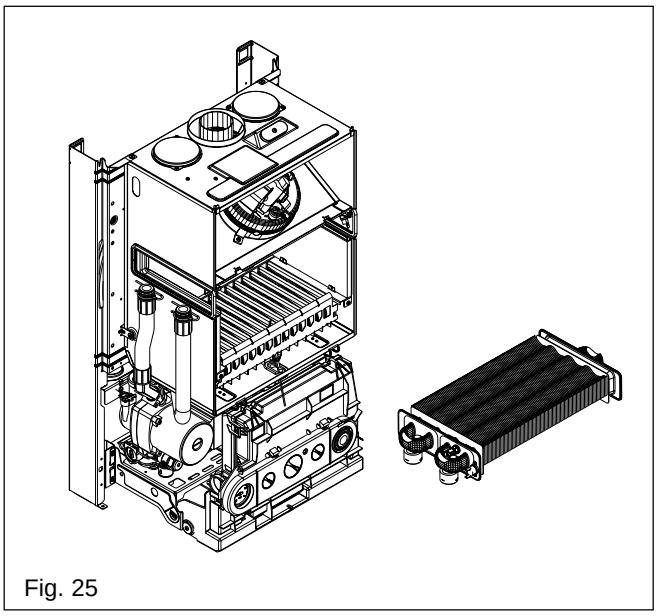

Fig. 25

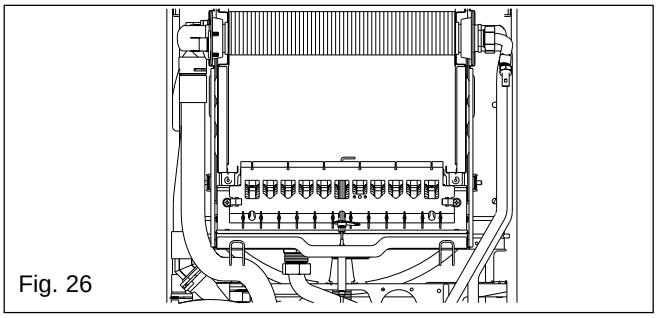

Fig. 26

6.18 FLUE FAN (fig. 24 & 27)

Carry out component removal procedure as described in section 6.5.

Remove outer combustion cover by un-clipping the two retaining clips located at the base of the combustion cover, gently pull the cover towards you before lifting and disengaging it from the top retaining lugs. Disconnect the electrical connections and silicone tubes attached to the fan, noting their positions. Locate and remove the combustion test point screws and the cross head screw which retains the combustion analysis test point assembly, push the test point into the fan housing, locate and remove the three screws which secure the fan to the flue hood, ease the fan from its location. Replace in the reverse order. Ensure all seals are in good condition, taking care to ensure they are replaced correctly.

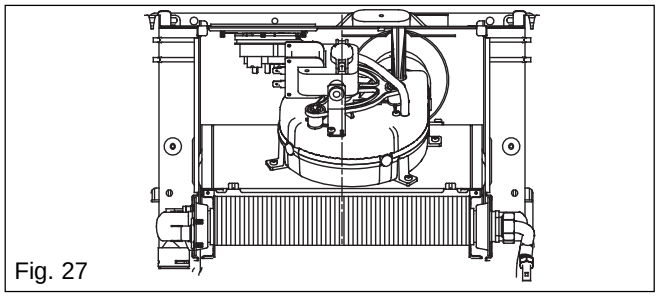

Fig. 27

6.19 HEAT EXCHANGER fig. 25& 27

Carry out component removal procedure as described in 6.5. Remove outer combustion cover by un-clipping the two retaining clips located at the base of the combustion cover, gently pull the cover towards you before lifting and disengaging it from the top retaining lugs. Locate and remove the two screws at the base of the inner combustion cover, pull the cover towards you before lifting and disengaging it from the top retaining lugs. Remove locking pins and disconnect the hoses, from the flow and return connections on the heat exchanger. Disconnect the hot and cold connections on the heat exchanger. Disconnect the electrical plugs from the primary thermistor and high limit thermostat at the heat exchanger, the heat exchanger can now be withdrawn from the appliance. Replace in the reverse order. Ensure all seals are in good condition, taking care to ensure they are replaced correctly.

6.20 AIR PRESSURE SWITCH (fig. 1, 27)

Carry out component removal procedure as described in section 6.5.

Remove outer combustion cover by un-clipping the two retaining clips located at the base of the combustion cover, gently pull the cover towards you before lifting and disengaging it from the top retaining lugs. Locate and remove the two screws holding the air pressure switch to the combustion chamber. Disconnect the electrical connections and silicone tubes attached to the air pressure switch, noting their positions. Take-away the wires belt. Replace in the reverse order. Replace with a new belt. Ensure all seals are in good condition, taking care to ensure they are replaced correctly.

6.21 EXPANSION VESSEL

Due to the compact design of this appliance, removal and/or replacement of the expansion vessel requires the appliance to be removed from the wall, if this is deemed impractical, an external expansion vessel may be fitted to the return pipe as close to the appliance as possible.

6.22 EXPANSION VESSEL (removal) fig. 1

Carry out component removal procedure as described in 6.5.

Isolate gas, water and electrical supplies from the appliance. Disconnect and remove the electrical supply cable from the appliance. Disconnect all service valves and connections from the appliance. Disconnect the flue from the appliance.

The appliance can now be lifted from its mounting bracket. Lay the appliance on its side and disconnect the expansion pipe from the vessel, slacken and remove the locknut that secures the lower part of the vessel to the appliance frame. Locate and remove the six screws that secure the vessel top holding plate, remove the plate. The expansion vessel can now be removed. Replace in the reverse order. Ensure all seals are in good condition, taking care to ensure they are replaced correctly. GAS AND WATER SOUNDNESS CHECKS MUST BE CARRIED OUT.

7.1 CHECKING APPLIANCE OPERATION

When carrying out any repairs or servicing to the appliance the relevant commissioning procedure must be undertaken to ensure the continued safe operation of the appliance. Particular attention should be made to ensure gas soundness, water soundness, and the electrical integrity of the appliance.

7.2 AT REST MODE

When the appliance is at rest, (no demand for heat or water) the green LED will be illuminated to indicate there are no faults, if the appliance has been inactive for aproximately 24 hours, it will energise the pump for a short period to ensure the pump does not seize due to inactivity. The appliance also has built-in frost protection, which will operate even if the mode selector switch is in the 'off' position.

7.3 HOT WATER MODE

Opening a hot water outlet and enabling a flow rate of 2 litres or more, causes the domestic water flow switch to activate. Activation of the domestic hot water flow switch allows the fan to run. When the fan is running it proves (switches) the air pressure switch. The air pressure switch delivers current to the PCB and enables an ignition sequence to begin. The ignition sequence begins with the energising of the gas valve and a simultaneous sparking at the spark/sense electrode. This will continue for aproximately 10 seconds or until successful ignition has been established. (If no ignition has been established within the ten seconds, the ignition attempt will be terminated and the appliance will go to lockout). When ignition has been established, the appliance will quickly achieve and maintain the desired hot water temperature (see 5.13). The appliance monitors the setting of the hot water potentiometer against the temperature of the secondary thermistor, and increases or decreases current to the modulating coil, this in turn adjusts the burner pressure, thus enabling the temperature to be maintained to within a few degrees. When the temperature of the secondary thermistor exceeds the setting of the hot water potentiometer, ignition will be terminated until the temperature drops.

NOTE

The primary thermistor will overide the secondary thermistor if the temperature of the primary thermistor exceeds 80 ºC.

When the mode selector switch is set to heating and hot water, the pump will over-run for 30 seconds after any demand for heating or water has been satisfied.

When the mode selector switch is set to hot water only, the fan will over-run for one minute if the temperature of the primary thermistor exceeds 55 ºC.

7.4 HEATING MODE

With all controls calling for heat, the pump and fan will run. When the fan runs it proves the air pressure switch. The air pressure switch delivers current to the PCB and enables an ignition sequence to begin. The ignition sequence begins with the energising of the gas valve and a simultaneous sparking at the spark/sense electrode. This will continue for approximately 10 seconds or until successful ignition has been established. (If no ignition has been established within the ten seconds, the ignition attempt will be terminated and the appliance will go to lockout). The appliance monitors the setting of the heating potentiometer against the temperature of the primary thermistor, and increases or decreases current to the modulating coil, this in turn adjusts the burner pressure, thus enabling the temperature to be maintained to within a few degrees (see section 5.10). When the temperature of the primary thermistor exceeds the setting of the heating potentiometer, ignition will be terminated and the appliance will anti-cycle for three minutes (timer delay). When a new ignition sequence begins the output of the appliance is set at minimum for two minutes.

NOTE

Any demand for hot water has the priority.

If there is a demand for hot water whilst the appliance is anti-cycling, the timing will be cancelled once the demand for hot water has been satisfied.

7.5 FROST PROTECTION MODE

The built-in frost protection system will operate the appliance in the OFF, HOT WATER ONLY MODE, AND HEATING AND HOT WATER MODE. Should the temperature of the appliance fall to 7 ºC. the pump will run for fifteen minutes, this will be repeated every two hours. Should the temperature rise above 10 ºC. the fifteen minutes will be cancelled. Should the temperature fall below 5 ºC. the boiler will fire at minimum output until the temperature of the appliance exceeds 30 ºC.

NOTE

If the appliance is at lockout the frost protection mode is disabled.

Although the frost protection mode is active even when the appliance is switched off. The electrical supply to the appliance must be maintained for it to function.

Any demand for hot water or heating will reset any frost protection settings.

7.6 BURNER PRESSURE SETTINGS

Burner pressure settings should be checked and/or adjusted whenever the appliance is being serviced, commissioned, or the gas valve/control PCB have been replaced.

The procedure for setting or adjusting must be carried out in the following order:

- set the maximum DHW gas pressure
- set the minimum DHW gas pressure
- set the maximum heating gas pressure
- set the minimum heating gas pressure.

7.6.1 SETTING THE MAXIMUM DHW GAS PRESSURE (fig. 13 & 22)

Isolate the appliance from the electrical supply, remove the appliance casing as described in section 4.7.1.

- Attach a manometer to the outlet test point of the gas valve.
- Remove the protective cover from the gas valve modulator, and disconnect the compensation tube from the gas valve.
- Fully open a hot water outlet (preferably the bath tap).
- Rotate the DHW temperature selector to maximum.
- Restore the electrical supply to the appliance.
- The appliance will now light and after 7-10 seconds, the burner will be at full power.
- Observe the manometer, the reading for Sabre 24 should be 10.1 mbar, for Sabre 28 the reading should be 10.2 mbar.
- If the reading is correct, proceed to section 7.6.2
- If the reading is incorrect, turn the maximum adjustment screw (fig. 13) clockwise to increase the pressure, or anti-clockwise to reduce the pressure.
- Proceed to section 7.6.2

7.6.2 SETTING THE MINIMUM DHW GAS PRESSURE (fig. 13 & 22)

- After carrying out section7.6.1, disconnect one of the black wires attached to the modulator coil.
- The burner will now operate at minimum power.
- Observe the manometer, the reading for Sabre 24 should be 1.5 mbar, for Sabre 28 the reading should be 1.3 mbar.
- If the reading is correct, proceed to section 7.6.3.
- If the reading is incorrect, turn the minimum adjustment screw (fig. 13) clockwise to increase the pressure, or anti-clockwise to reduce the pressure.
- Proceed to section 7.6.3

7.6.3 SETTING THE MAXIMUM AND THE MINIMUM CENTRAL HEATING BURNER PRESSURES

- Isolate the appliance from the electrical supply.
- Close the hot water outlet.
- Re-attach the black wire to the modulator coil.
- Remove the PCB cover and temporarily attach a jumper tag to JP2.
- Rotate the heating temperature selector to maximum, and ensure all radiators are turned on with any thermostatic radiator valves set to maximum.
- Restore the electrical supply and ensure there is a call for heat via the appliance time clock and/ or room thermostat.
- The appliance should now be operating in the heating mode at maximum output.
- Observe the manometer, the – maximum – reading for Sabre 24 should be 10.1 mbar, for Sabre 28 the reading should be 10.2 mbar
- Using a small screwdriver, gently rotate the P5 potentiometer if adjustment is necessary.
- To check and/or adjust the minimum heating gas pressure, slowly rotate the heating temperature selector until the burner pressure drops to minimum (should be 1.9 mbar).
- Using a small screwdriver, gently rotate the P4 potentiometer if adjustment is necessary.
- Isolate the appliance from the electrical supply, and remove the jumper tag from JP2.
- Remove the manometer from the gas valve and tighten the outlet test screw.
- Refit the PCB cover and appliance casing.

7.7 COMBUSTION ANALYSIS TEST

The appliance has a built-in facility which enables combustion analysis checks to be carried out. To activate the combustion analysis mode, proceed as follows.

Locate and remove combustion test point screw, (fig. 1) insert flue gas analyser probe into combustion test point, remove mode selector switch and rotate selector shaft clockwise until it can go no further, wait until the LED begins to flash, turn the selector shaft back to the heating position. The appliance will now enter its combustion analysis mode whereby it will fire at maximum output in the heating mode for fifteen minutes, without modulating until the maximum operating temperature is realised. To gain accurate information, ensure the flue gas analyser has been set properly, and that the analysis is carried out when the appliance is on maximum output. Once the analysis has been completed, re-fit the mode selector switch, remove the flue gas analyser probe and replace the test point screw.

7.8 CHECKING THE EXPANSION VESSEL

Carry out procedure as described in section 6.5. Using a suitable pressure gauge, remove dust cap on expansion vessel and check the charge pressure. The charge pressure should be between 0.7 – 0.8 bar. If the charge pressure is less, use a suitable pump to increase the charge. Please note, you must ensure the safety valve is in the open position whilst re-charging takes place. Replace dust cap and carry out the relevant commissioning procedures as detailed in section 6.21.

7.9 ELECTRO-MECHANICAL FAULTS

Before carrying out any fault finding or component replacement, ensure the fault is not attributable to any aspect of the installation, for example, external wiring fault, hot & cold services reversed, service valves closed, gas supply turned off, etc.

7.10 POSSIBLE INSTALLATION FAULTS

FAULT	POSSIBLE CAUSES	REMEDY
APPLIANCE FIRES THEN LOCKOUTS	INCORRECT GAS PRESSURE FLUE BLOCKED OR BROKEN	CHECK INCOMING PRESSURE AND/OR BURNER PRESSURES CHECK FLUE ASSEMBLY
APPLIANCE WON'T FIRE FOR HOT WATER	HOT & COLD PIPES REVERSED FLOW REGULATOR BLOCKED INSUFFICIENT FLOW RATE	CHECK EXTERNAL PLUMBING REMOVE AND CLEAN INCREASE FLOW RATE
APPLIANCE WON'T FIRE FOR HEATING	EXTERNAL CONTROL OR WIRING FAULT OR WIRING	CHECK EXTERNAL CONTROLS
APPLIANCE FIRES FOR HEATING BUT NO CIRCULATION AROUND SYSTEM	FLOW & RETURN SERVICE VALVES CLOSED AIR IN APPLIANCE PUMP STUCK DEBRIS IN SYSTEM	OPEN SERVICE VALVES OPEN DUSTCAP ON 'AAV' OPEN VENT PLUG ON PUMP AND ROTATE SHAFT FLUSH SYSTEM
APPLIANCE INACTIVE NO 'LED's SHOWING	ELECTRICAL SUPPLY FAULT BLOWN FUSE	CHECK SUPPLY TO APPLIANCE FOR 240V BETWEEN 'L' & 'N' CHECK AND REPLACE

7.11 ELECTRICAL CHECKS

Any electrical checks must be carried out by a suitably qualified person.

7.11.1 EARTH CONTINUITY TEST

Isolate the appliance from the electrical supply, and using a suitable multi-meter carry out a resistance test. Connect test leads between an appliance earth point and the earth wire of the appliance supply cable. The resistance should be less than 1 ohm. If the resistance is greater than 1 ohm check all earth wires and connectors for continuity and integrity.

7.11.2 SHORT CIRCUIT CHECK

Isolate the appliance from the electrical supply, and using a suitable multi-meter, carry out a short circuit test between the Live & Neutral connections at the appliance terminal strip (fig. 12).

Repeat above test on the Live & Earth connections at the appliance terminal strip (fig. 12).

NOTE

Should it be found that the fuse has failed but no fault is indicated, a detailed continuity check will be required to trace the fault. A visual inspection of components may also assist in locating the fault.

7.11.3 POLARITY CHECK

With the appliance connected to the electrical supply and using a suitable multimeter, carry out the following voltage tests. Connect test leads between the Live & Neutral connections at the appliance terminal strip (fig.12); the meter should read aproximately 230V ac. If so proceed to next stage. If not, see section 7.11.4.

Connect test leads between the Neutral & Earth connections at the appliance terminal strip (fig.12); the meter should read aproximately 0 – 15Vac. If so polarity is correct. If not, see section 7.11.4

7.11.4 REVERSED POLARITY OR SUPPLY FAULT

Repeat the above tests at the appliance isolator, if testing reveals correct polarity and/or supply at the isolator, re-check wiring and connections between the isolator and the appliance.

If tests on the isolator also reveal reversed polarity or a supply fault, consult the local electricity supplier for advice.

7.11.5 RESISTANCE TO EARTH CHECK

Isolate the appliance from the electrical supply, and using a suitable multi-meter carry out a resistance test. Connect test leads between the Live & Earth connections at the appliance terminal strip (fig.12). If the meter reads other than infinity there is a fault which must be isolated, carry out a detailed continuity check to identify the location of the fault.

IMPORTANT

These series of checks must be carried out before attempting any fault finding procedures on the appliance. On completion of any task which required the disconnection and re-connection of any electrical wiring or component, these checks must be repeated.

7.11.6 FUSES

The appliance is equipped with spare fuses. These fuses are located on the cover of the main PCB. If a fuse has blown it is usually indicative of an external wiring fault or a faulty component such as the pump, fan, valve actuator, etc. Under no circumstances should a blown fuse be replaced with one of a higher rating.

7.12 FAULT FINDING

BEFORE ATTEMPTING ANY FAULT DIAGNOSIS OR REPAIR THE FOLLOWING PROCEDURE SHOULD BE CARRIED OUT:

- Carry out the relevant electrical checks as detailed in section 7.11
- Disconnect any external wiring from the room thermostat connections of the appliance terminal strip and replace with a solid link wire.
- Ensure the appliance is protected – externally – by a 3 amp fuse.

7.12.1 FAULT FINDING TEST 'A': CHECKING OPERATION OF ELECTRONIC CONTROL BOARD AT START UP

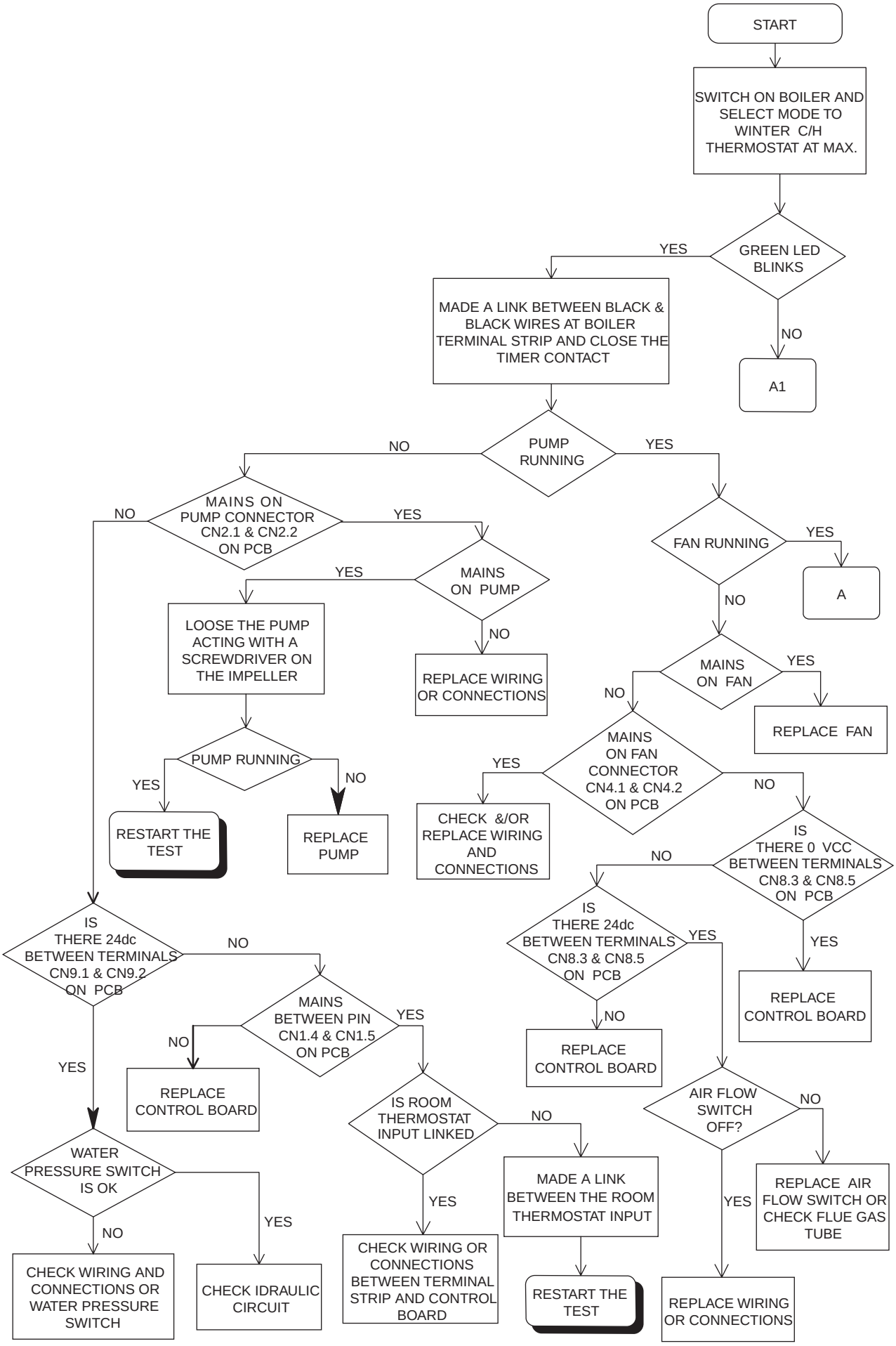

7.12.2 FAULT FINDING TEST 'A'

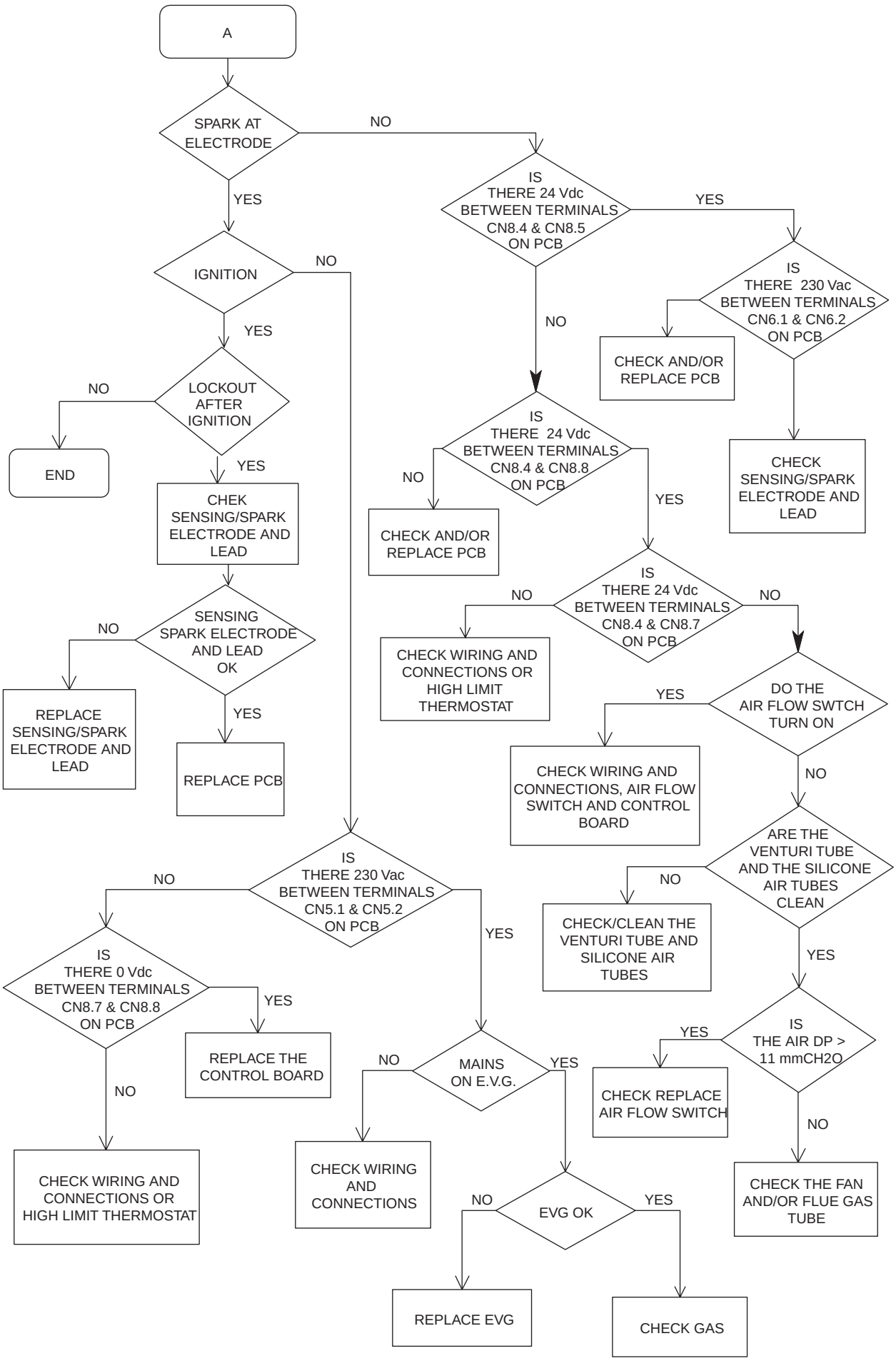

7.12.3 FAULT FINDING TEST 'A1'

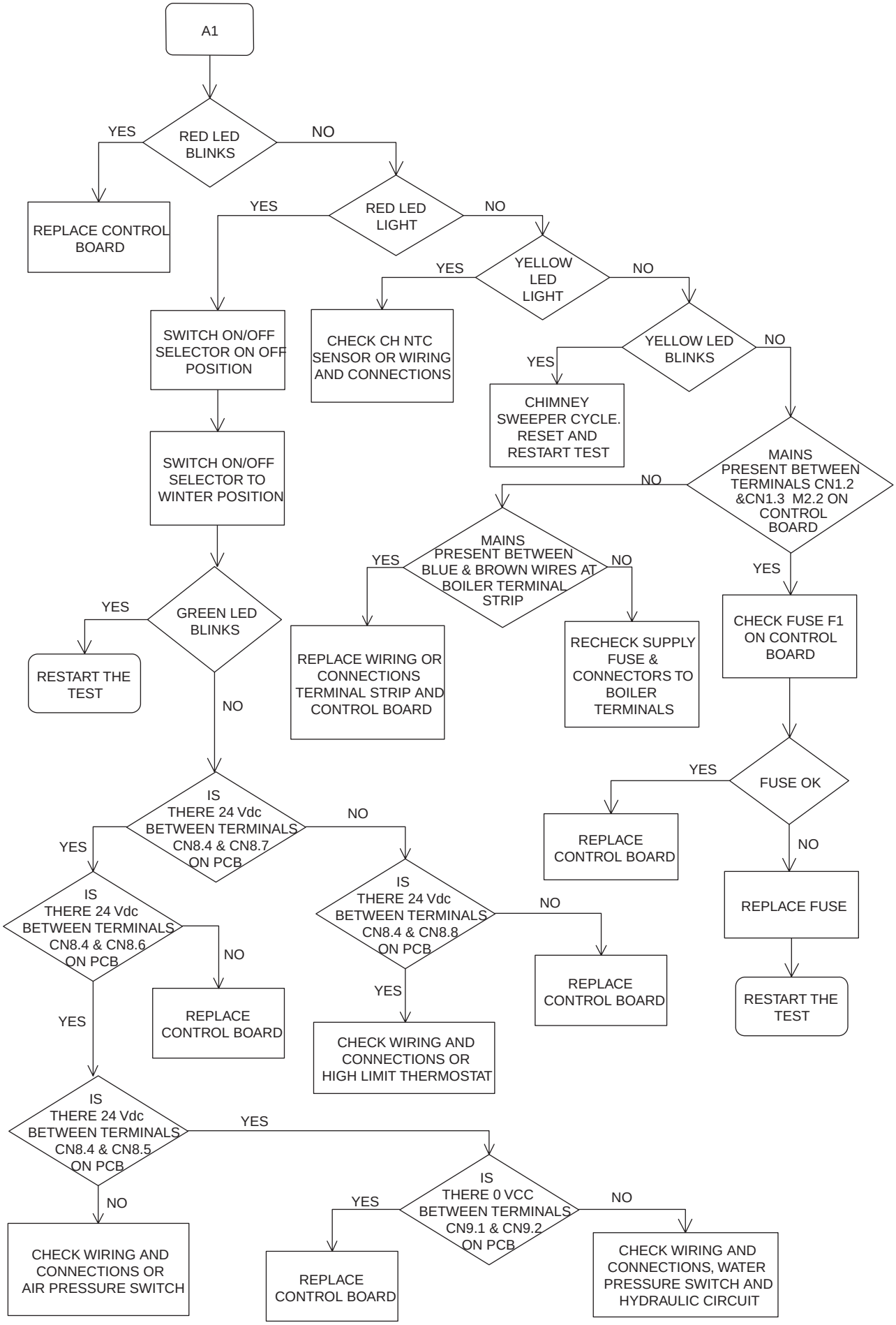

7.12.4 FAULT FINDING TEST 'B': CHECK CONTROL IN DHW MODE

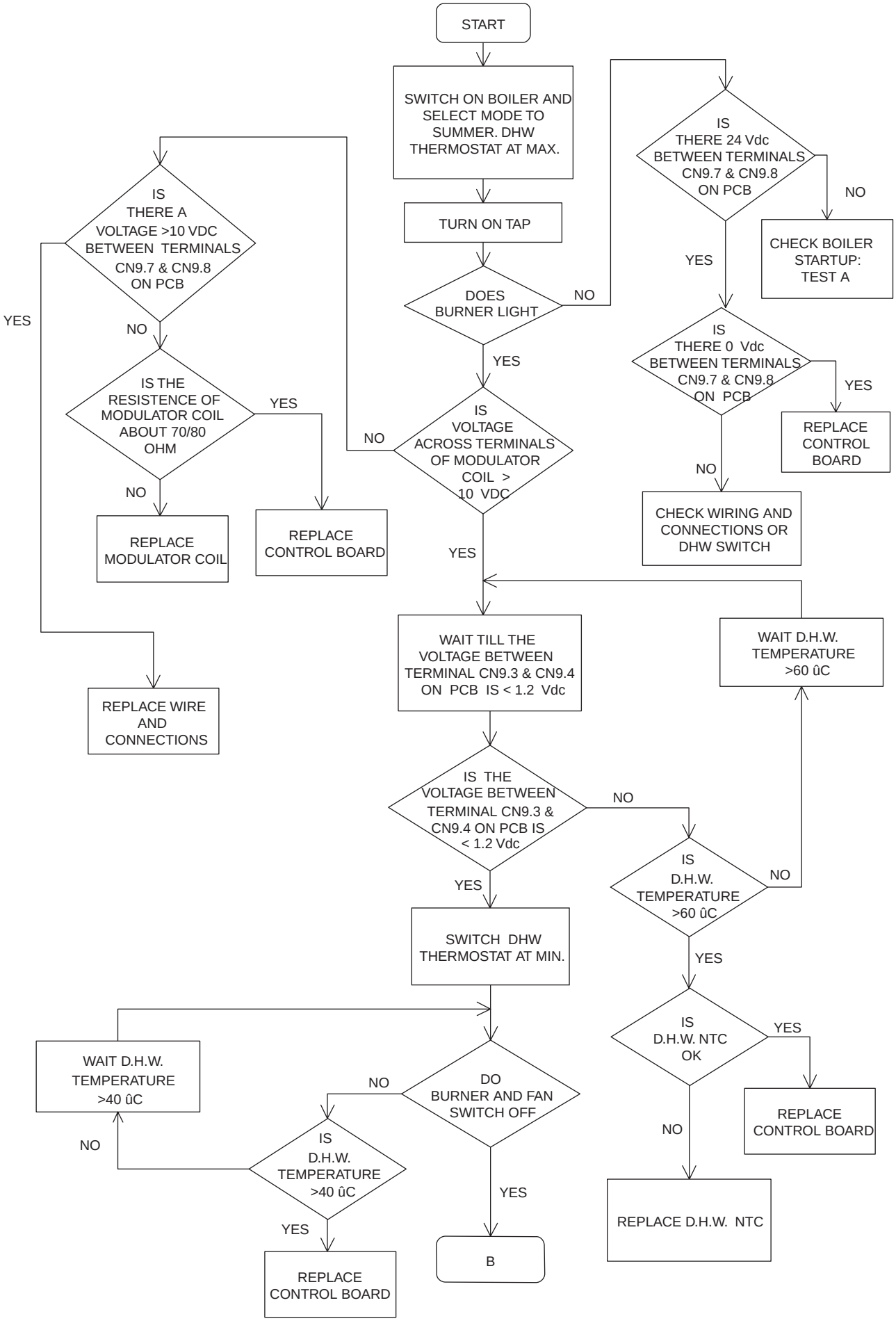

7.12.5 TEST ‘B’ CONT’D

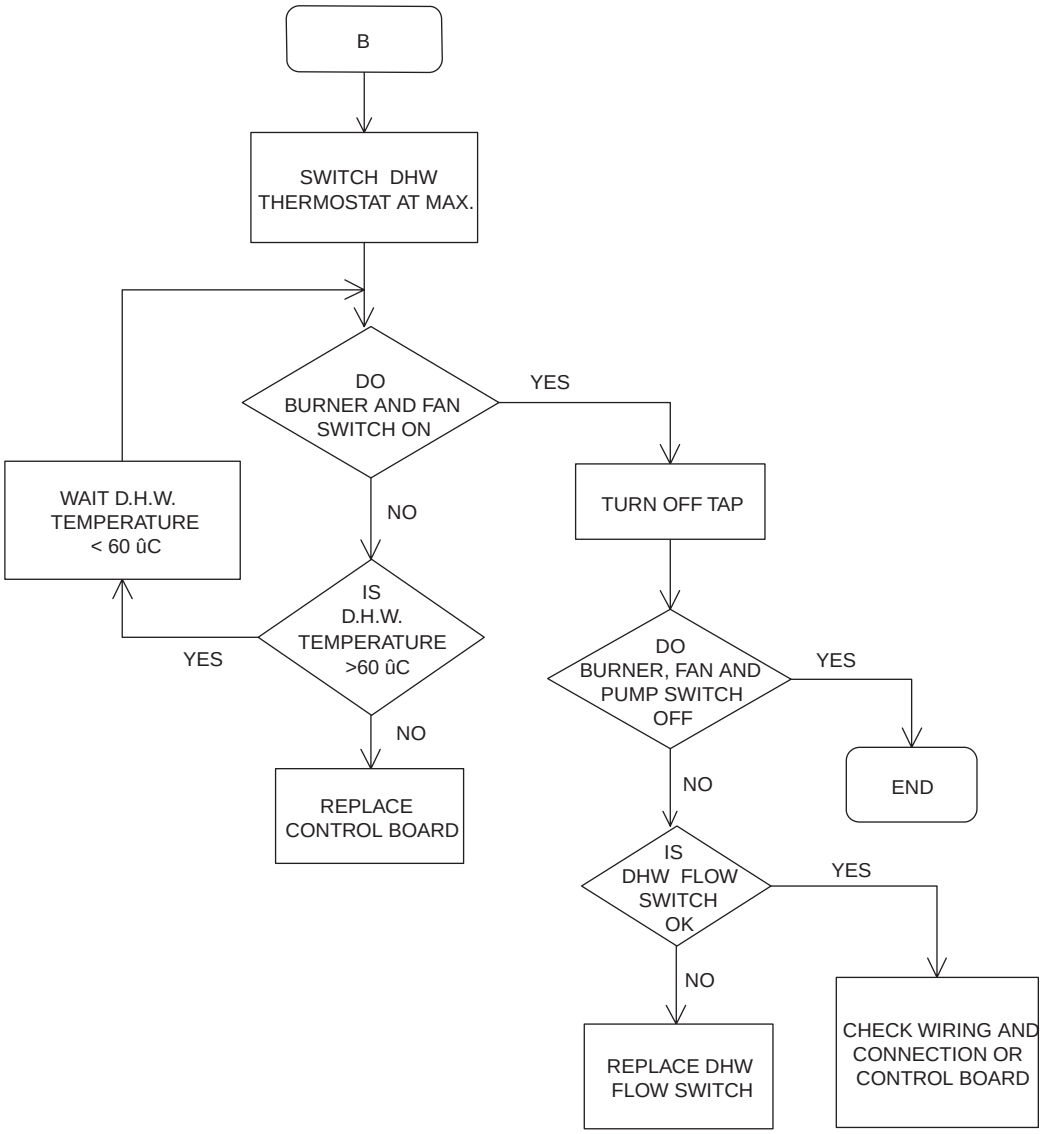

7.12.6 FAULT FINDING TEST 'C': CHECK CONTROL IN C/H MODE

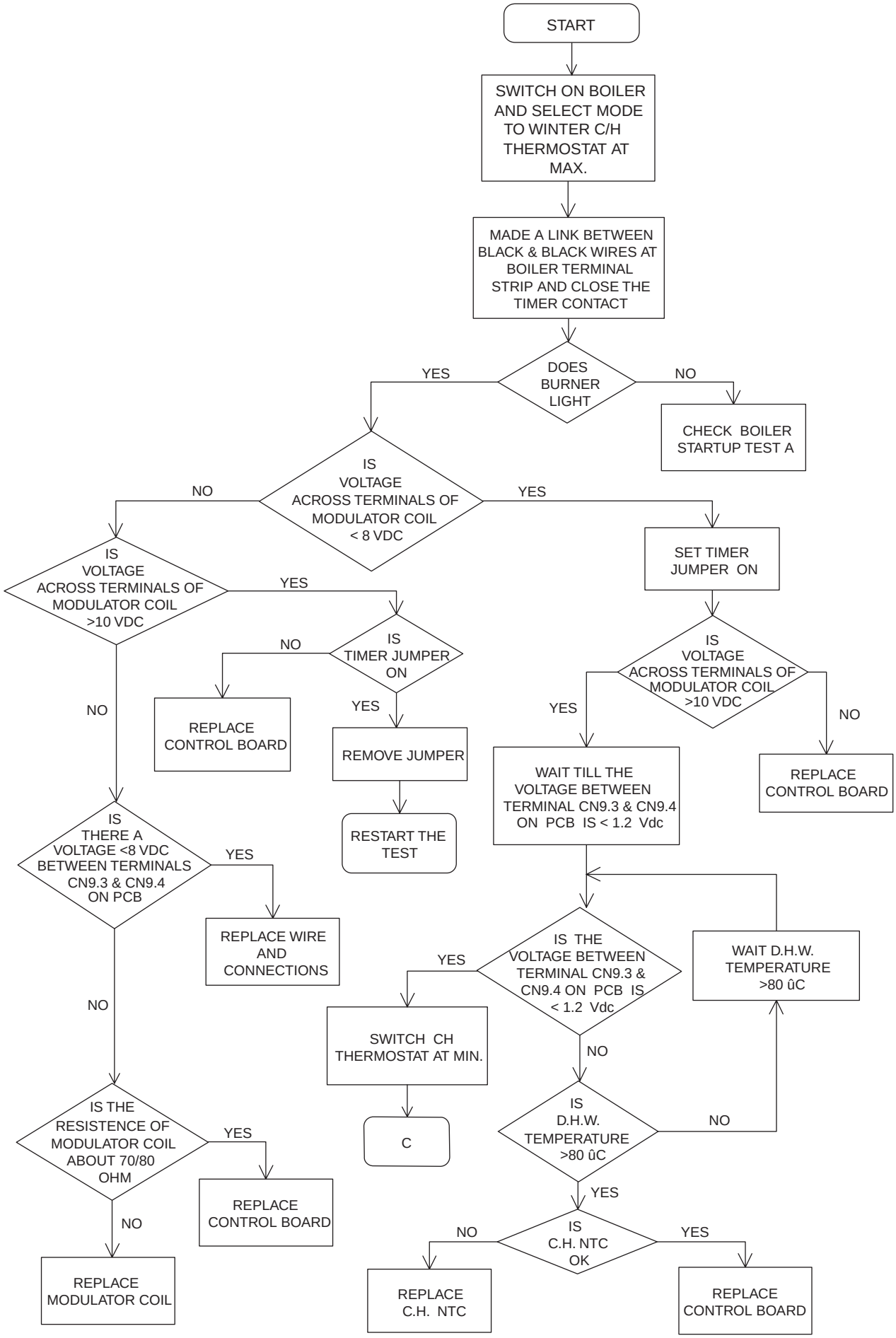

7.12.7 TEST 'C' CONT'D

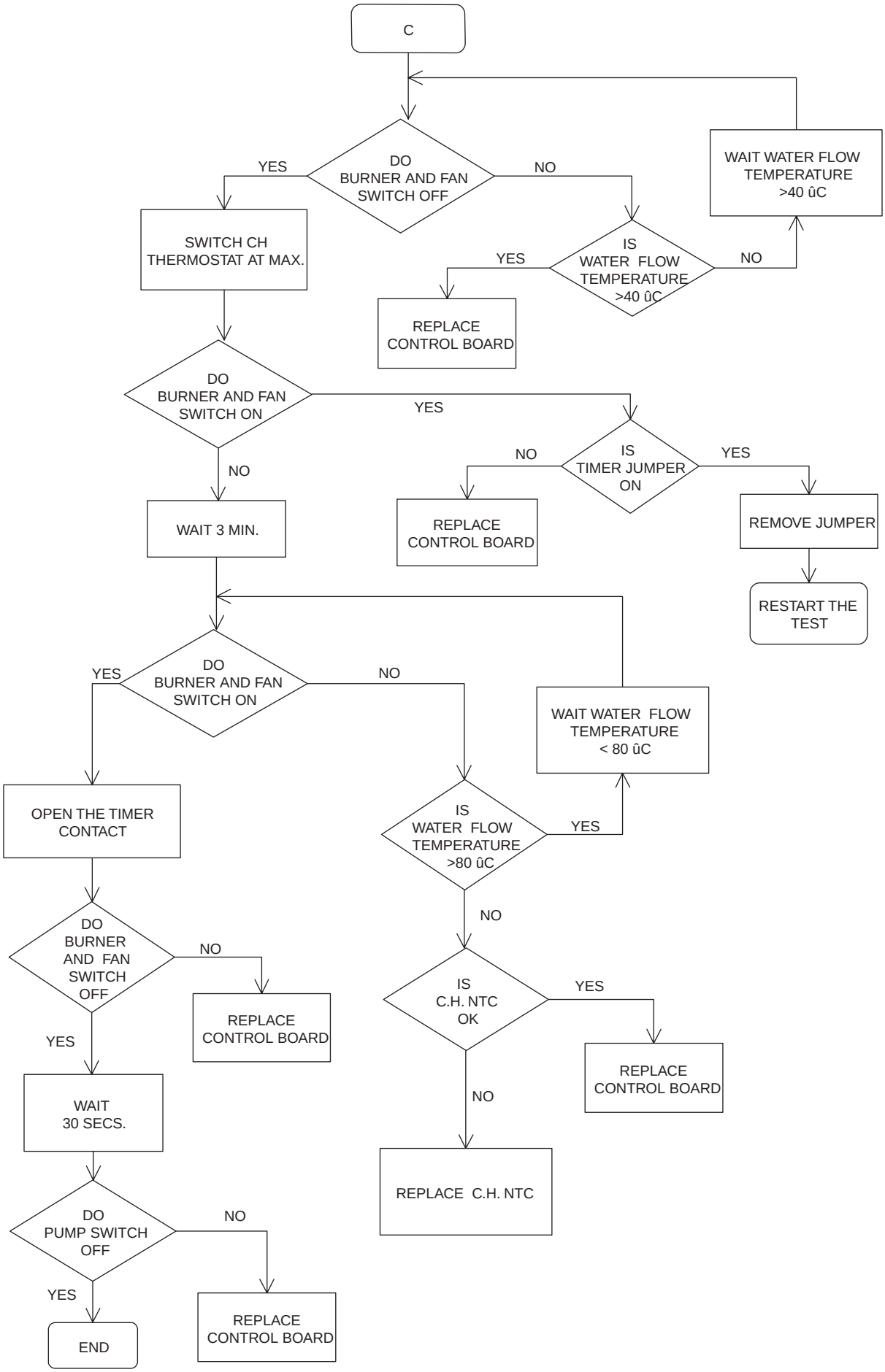

8.1 CONNECTION OF A ROOM THERMOSTAT (Fig. 28)

Isolate the appliance from the electrical supply. Remove the appliance casing and PCB cover.

Connect the room thermostat as shown in figure 28. We recommend the use of a “voltage-free” type room thermostat. Should another type of room thermostat be preferred, please contact the technical help-line for detailed advice and guidance.

8.2 CONNECTION OF AN EXTERNAL TIME CLOCK (Fig. 28A)

Should the integral time clock be unsuitable, additional or alternative controls must be connected to the appliance terminal strip as shown in Fig. 28 or 28A. The external time clock or control must be of the “voltage-free” type.

Carry out the electrical checks as described in 7.11 prior to refitting the PCB cover and appliance casing.

NOTE

Guidance on the recommended practice for the in stallation of external controls, can be found in CHeSS – HC1/HC2 (www.energy-efficiency.gov.uk).

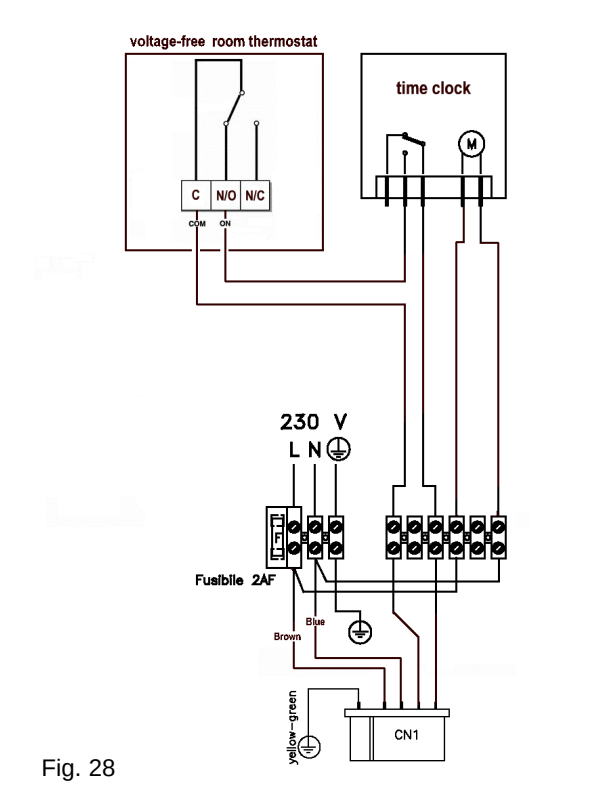

Fig. 28

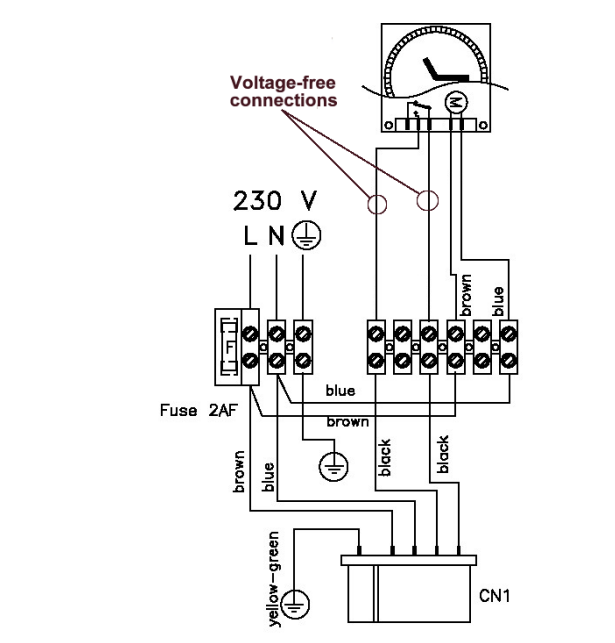

Fig. 28A

FUNCTIONAL DIAGRAM

NOTE: L-N-E CONNECTION IS ADVISABLE

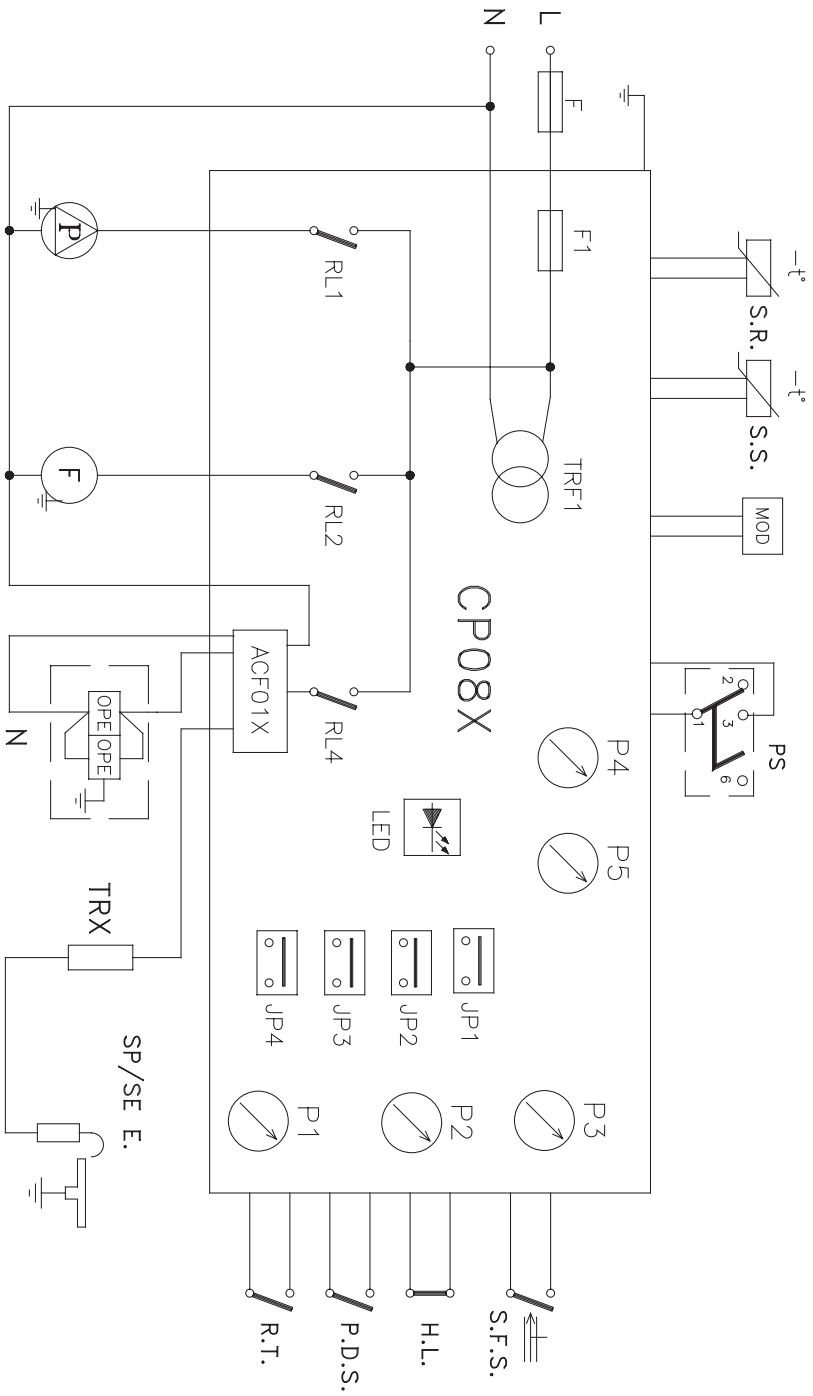

Fig. 29

Key

R.T.	Room thermostat
S.F.S.	Domestic hot water flow switch
P.S.	Pressure switch
P.D.S.	Differential pressure switch
H.L.	High limit thermostat
S.R.	Heat thermistor
S.S.	Domestic hot water thermistor
MOD	Modulator
F	Fan
P	Pump
SP/SE E.	Spark\Sense electrode
OPE	Gas valve solenoids
B.C.B.	Burner control board
CP08X	Boiler control board
JP2	Setting timer
JP3	Natural gas or L.P.G. selector
JP4	Jumper disable/enable DHW absolut thermostat
P1	Domestic hot water temperature control
P2	Central heating temperature control
P3	Off/summer/winter selector
P4-P5	Setting trimmer
F	External fuse 2 A F (on 230 V circuit)
F2 (CP08X)	Fuse 2 A F (on 230 V circuit)
RL1	Ignition relay
RL2	Fun relay
RL4	Pump relay
TRF1	Trasformer
TRX	Ignition trasformer
ACF01X	Ignition control board
LED	Led OK (green) Led alarm (red) Combustion test (blink orange)

FUNCTIONAL DIAGRAM

NOTE: L-N-E CONNECTION IS ADVISABLE

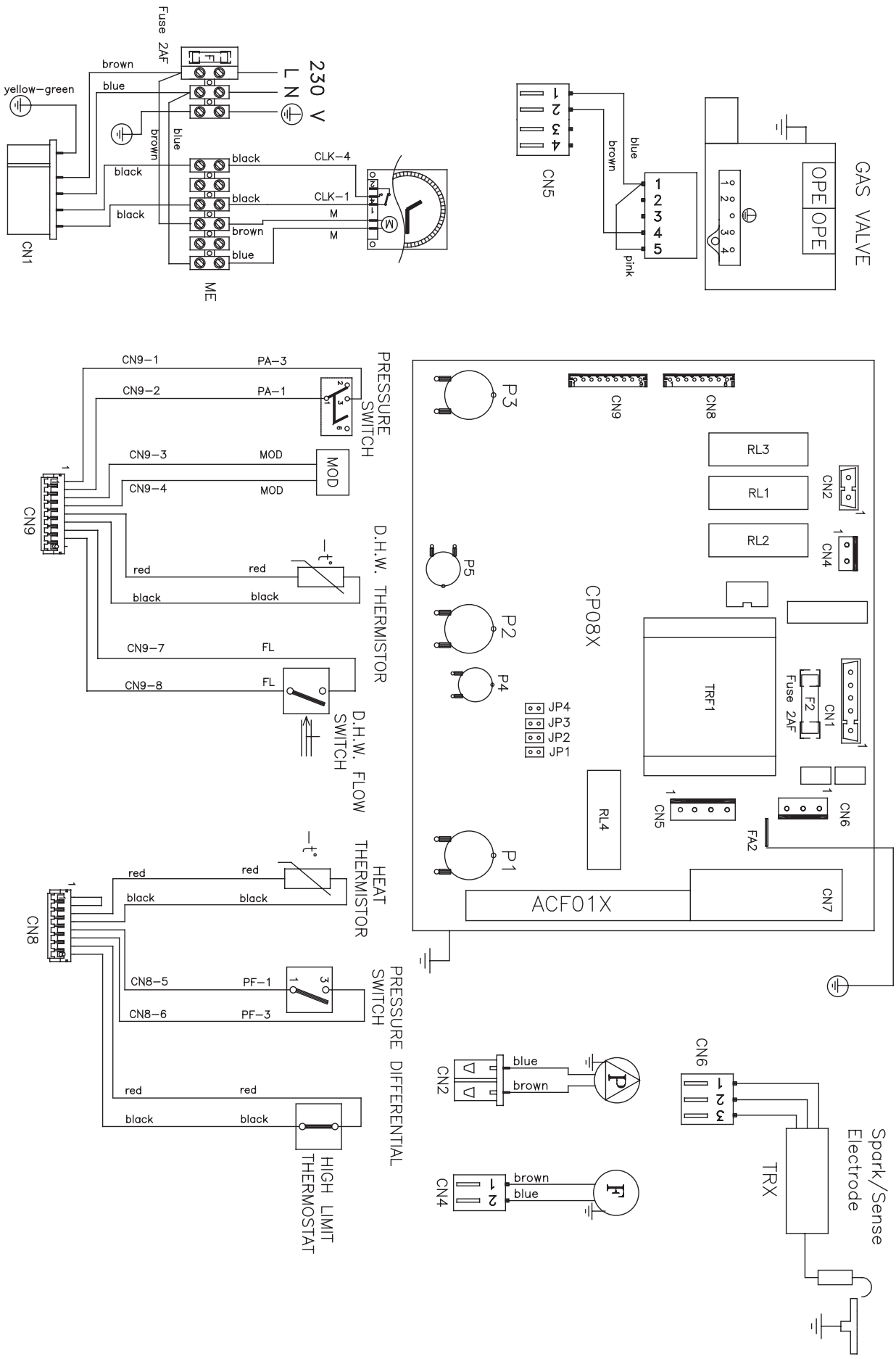

Fig. 30

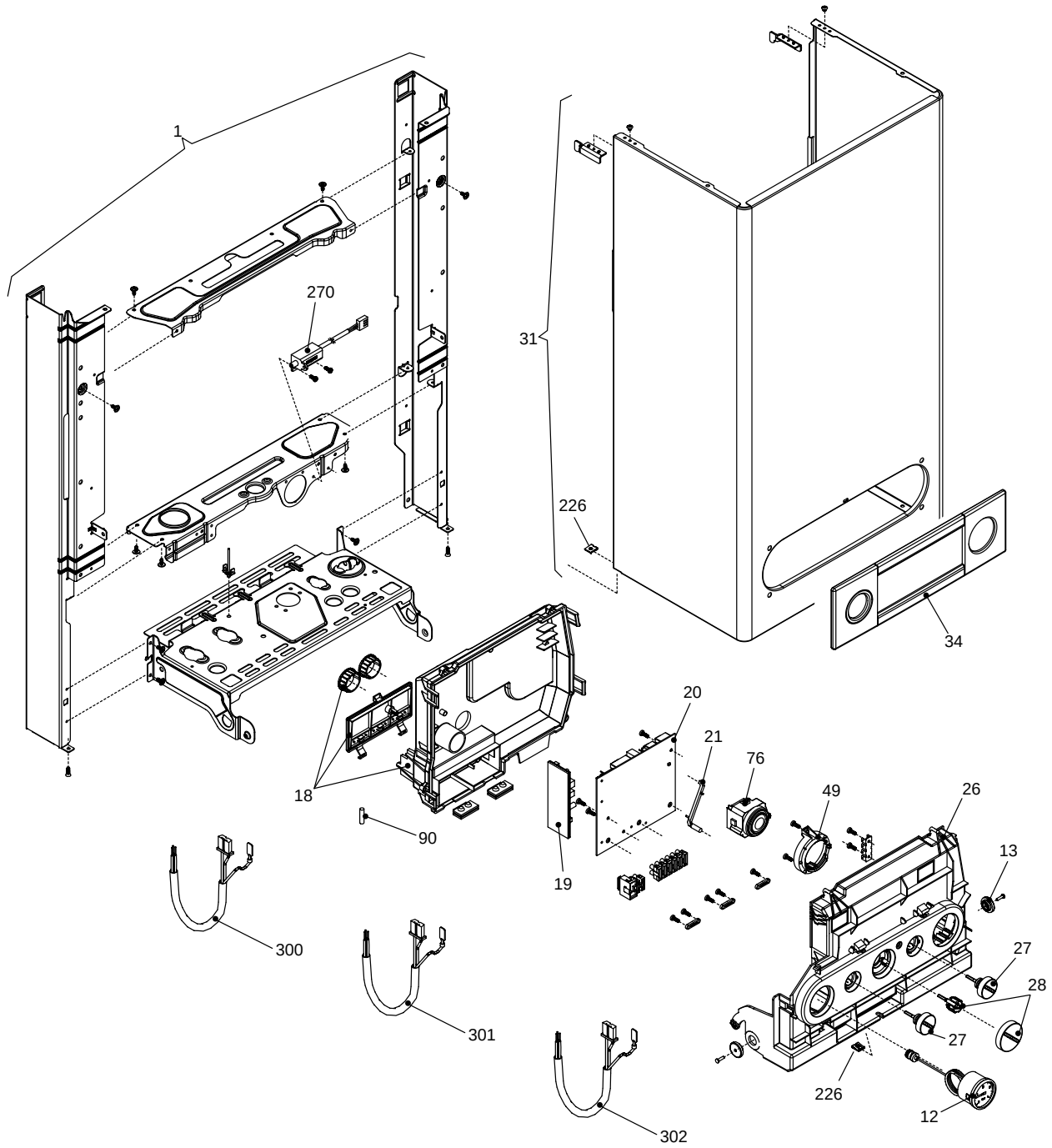

POS.	DESCRIPTION	24	28
1	Frame assembly	01005282	01005330
12	Quick primer pressure gauge	2564	2564
13	Pin	10023044	10023044
18	Cover	10024976	10024976
19	Ignition module	10022174	10022174
20	Printed Circuit Board	10023537	10023537
21	Led Light Guide	10023816	10023816
26	Instrumental panel	10025726	10025726
27	Knob	10023937	10023937
28	Knob	10023936	10023936
31	Case	10025728	10025739
34	Fixing flange	10025731	10025731
49	Converter	10023935	10023935
76	Timer	10023938	10023938
90	3 A fuse	3478	3478
226	Edge clip	5128	5128
270	Transformer	10021272	10021272
300	Wiring harnes	10023840	10023840
301	Wiring harnes	10023939	10023939
302	Wiring harnes	10023940	10023940

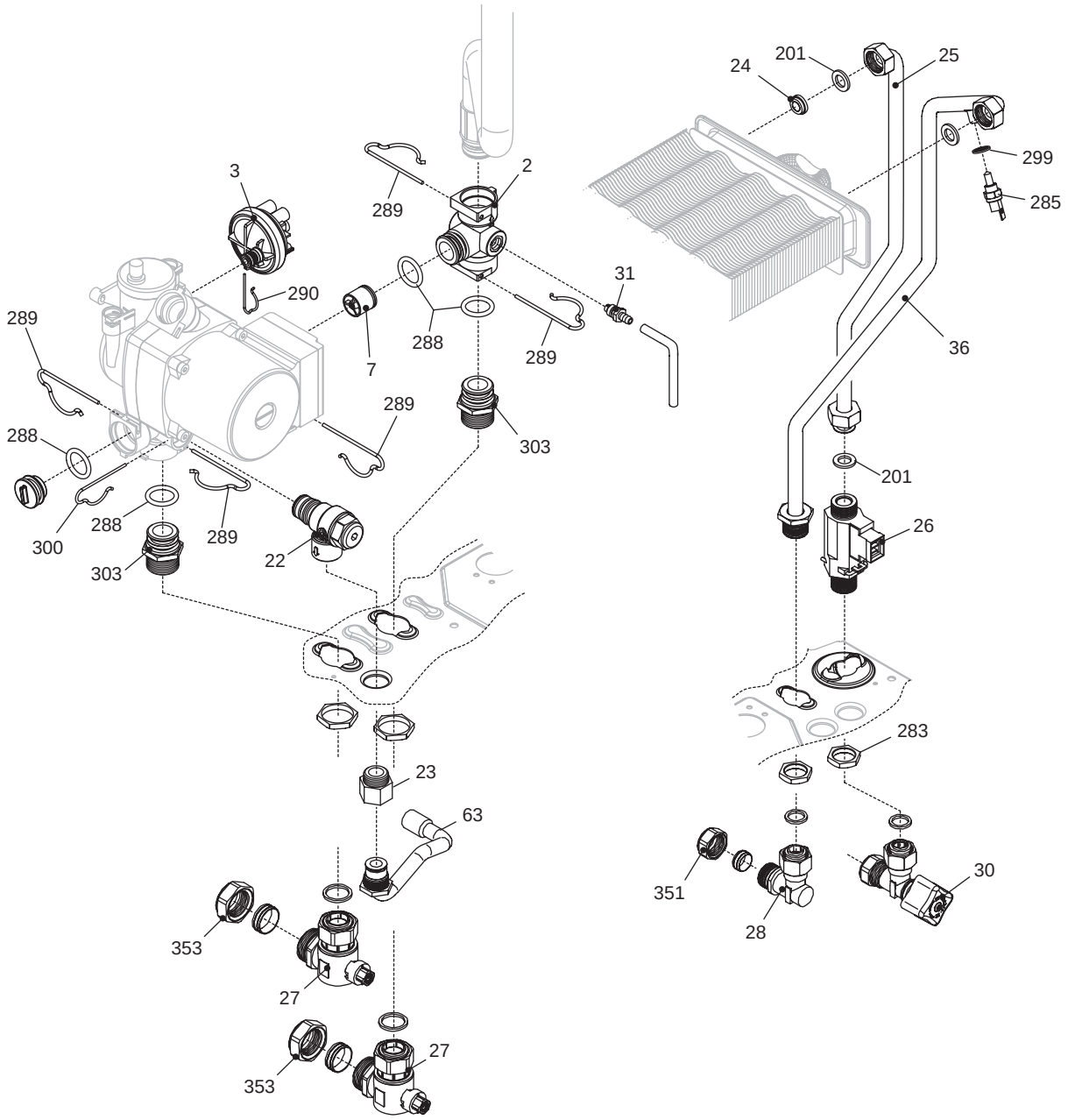

POS.	DESCRIPTION	24	28
2	Connection	10022658	10022658
3	Pressure switch	2044	2044
7	By-pass valve	2047	2047
22	Safety valve	2907	2907
23	Connection	10022499	10022499
24	Flow governor*	8009	9430
		8008	8009
25	Pipe	10020714	10023950
26	DHW actuator	10022349	10022349
27	Heating cock	1789	1789
28	Connection	1790	1790
30	Water supply stop cock	10025733	10025733
31	Venting plugs kit	01005137	01005137
36	Pipe	10020612	10023949
63	Pipe	10020898	10020898
201	Washer	5026	5026
285	NTC sensor	8484	8484
288	O ring	6898	6898
289	Clip	2223	2223
290	Clip	2165	2165
299	Washer	10022726	10022726
300	Clip	2222	2222
303	Connection	2217	2217
351	Ogive	1823	1823
353	Ogive	1824	1824

* White flow governor	8008
Blue flow governor	8009
Red flow governor	9430

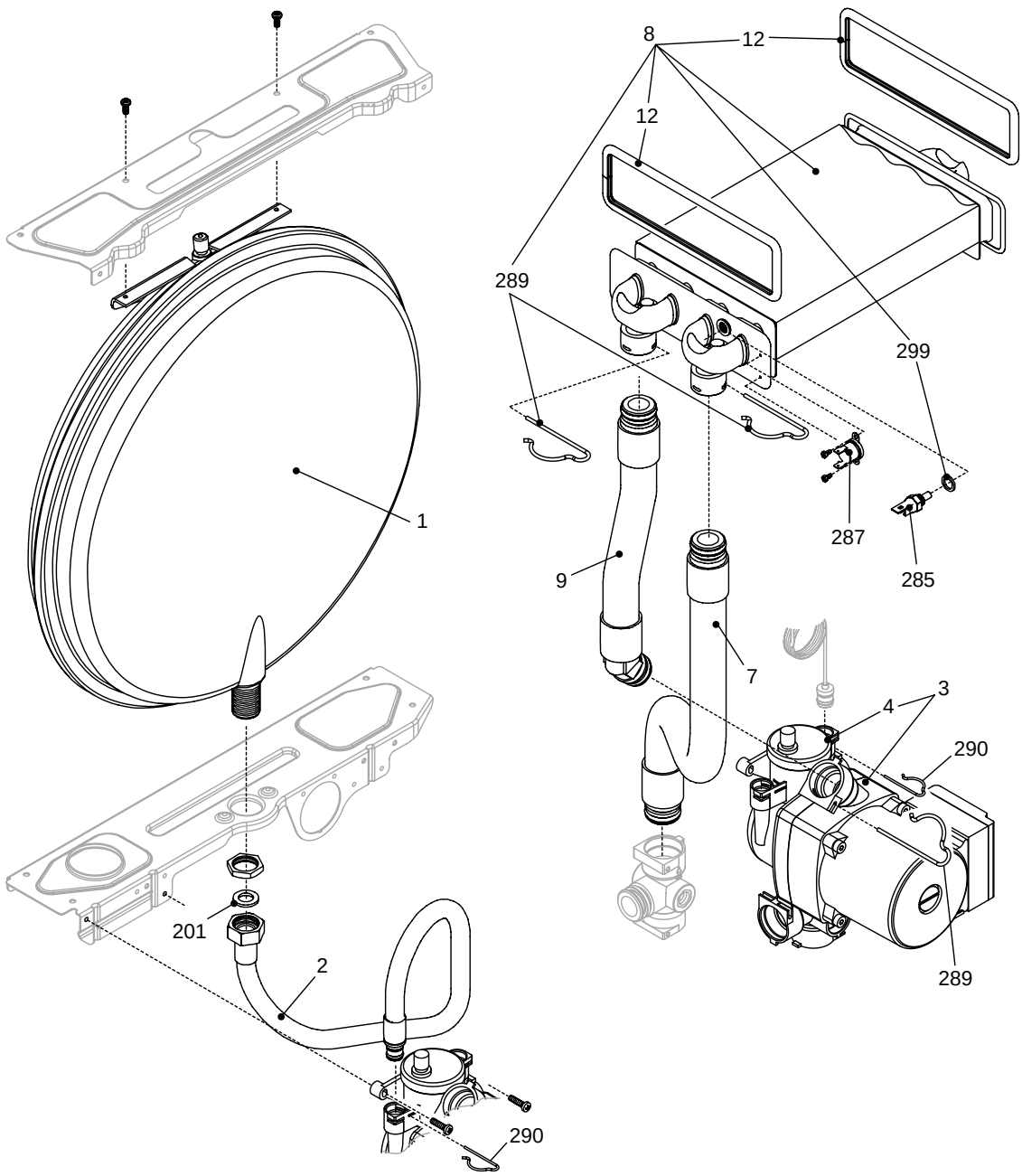

POS.	DESCRIPTION	24	28
1	Expansion vessel	2204	2204
2	Flexible pipe	2164	2164
3	Pump	2225	2225
4	Automatic air vent bottle	0439	0439
7	Flexible pipe	10022000	10023947
8	Heat exchanger	10021419	10023661
9	Flexible pipe	10022002	10023948
12	Washer	2226	2226
201	Washer	5026	5026
285	NTC sensor	8484	8484
287	High limit thermostat	2258	2258
289	Clip	2223	2223
290	Clip	2165	2165
299	Washer	10022726	10022726

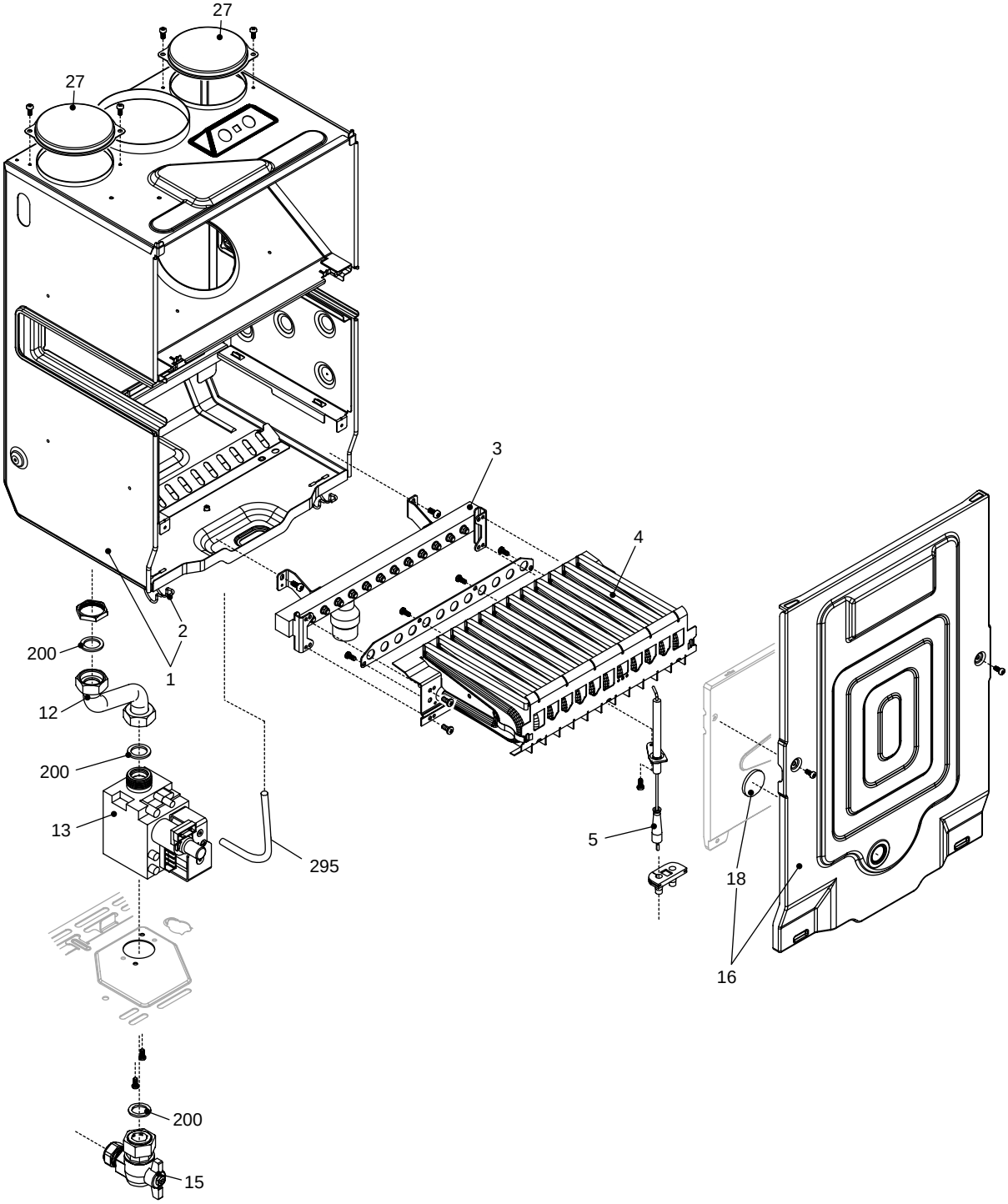

POS.	DESCRIPTION	24	28
1	Roomsealed chamber	10024669	10023904
2	Clip	0402	0402
3	Main burner injector manifold	10023799	10023902
4	Burner	10023798	10023901
5	Spark electrode	10021398	10021398
12	Pipe	10023996	10023996
13	Gas valve	10025074	10025074
15	Gas cock	10020897	10020897
16	Cover assembly	10024779	10023928
18	Glass	10021558	10021558
27	Air box hole cap	10023805	10023805
200	Washer	5023	5023
295	Silicone tube	1457	1457
-	LPG conversion kit	01005297	01005297

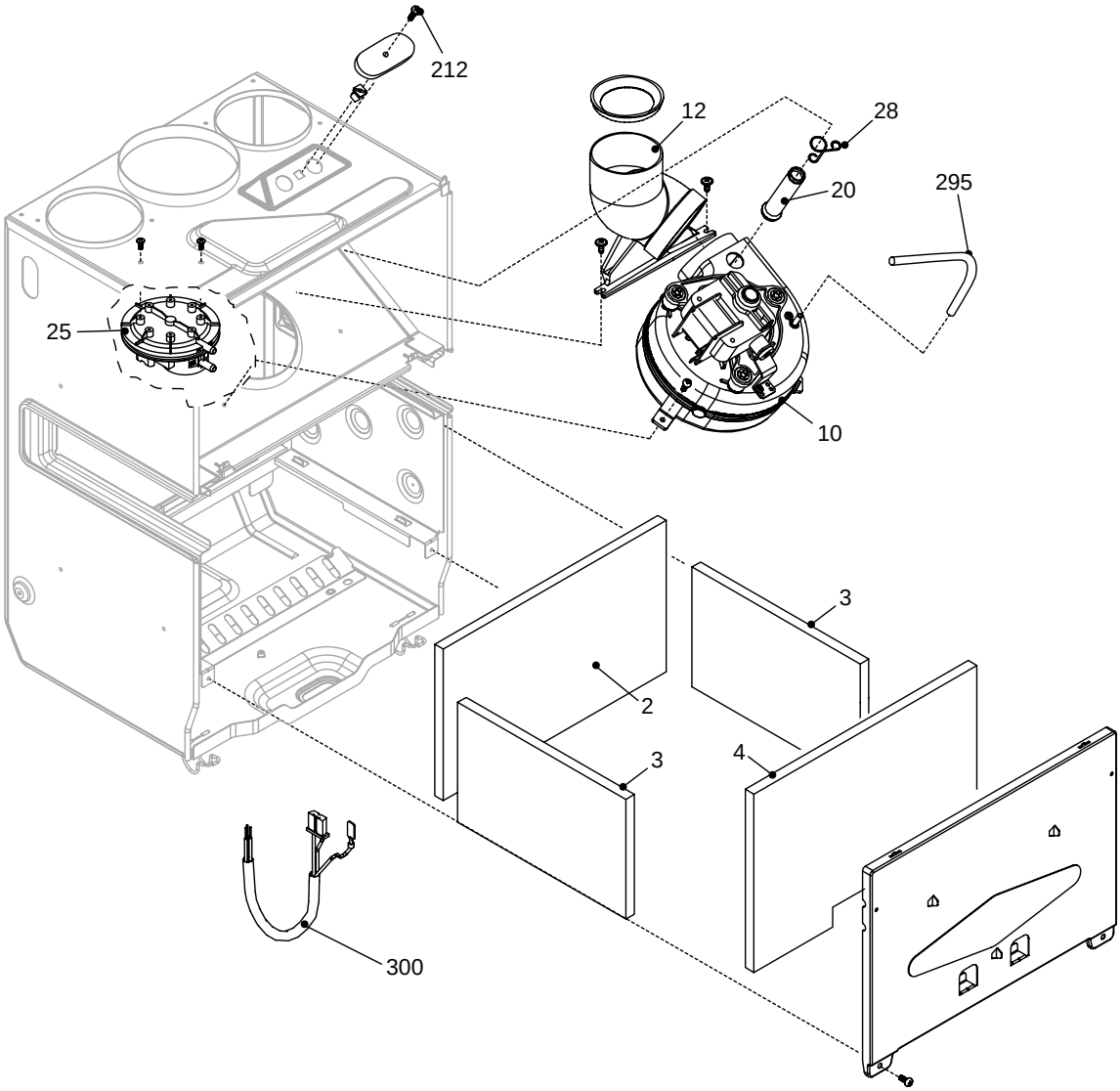

POS.	DESCRIPTION	24	28
2	Back insulating panel	2230	10023909
3	Lateral insulating panel	2231	2231
4	Front insulating panel	2232	10023910
10	Fan	10020793	10023907
12	Connection	10021972	10021972
20	Fumes testing connection pipe	10021973	10021973
25	Pressure diff. switch	01005272	10023908
28	Stop clip	10020626	10020626
212	Screw	5080	5080
295	Silicone tube	1457	1457
300	Wiring harnes	10024157	10024067

SECTION 10 L.P.G. INSTRUCTIONS

For details of converting appliances to LPG please refer to the instructions supplied with the relevant conversation kit.

10.1 TECHNICAL DATA

BURNER PRESSURES	*SABRE* 24	*SABRE* 28
Inlet pressure	37 mbar	37 mbar
Gas rate	2,04 Kg/h	2,41 Kg/h
Injectot size	12 x 0.77	14 x 0.77
Maximum burner pressure DHW & Heating	36 mbar	36 mbar
Minimum burner pressure DHW	5.1 mbar	4.8 mbar
Minimum burner pressure Heating	6.5 mbar	6.5 mbar
Jumper tag for LPG	Inserted across JP3	Inserted across JP3

10.2 RELATED DOCUMENTS

BS 6798		INSTALLATION OF BOILERS OF RATED INPUT NOT EXCEEDING 60 Kw
BS 5449	PART 1	FORCED CIRCULATION HOT WATER SYSTEMS
BS 5546		INSTALLATION OF GAS HOT WATER SUPPLIES FOR DOMESTIC PURPOSES
BS 5440	PART 1	FLUES
BS 5482	PART 1	DOMESTIC BUTANE & PROPANE GAS BURNERS IN PERMAMENT DWELLINGS

10.3 GAS SUPPLY

The gas supply must be connected to the appliance by a competent L.P.G. installer and must be of sufficient size to supply the appliance at its maximum output. An existing supply must be checked to ensure that it is of adequate size to deal with the maximum rated input of this and any other appliances that it serves.

10.4 GAS SUPPLY INSTALLATION

The entire installation including the meter, must be purged and checked for gas soundness.

10.5 BURNER PRESSURES

Burner pressure settings should be checked and/ or adjusted whenever the appliance is being serviced, commissioned, or the appliance gas type has changed.

NOTE

Ensure the jumper tag has been fitted to the control PCB (JP3).

The procedure for setting or adjusting must be carried out in the following order:

- set the maximum DHW gas pressure.
- set the minimum DHW gas pressure.
- set the maximum heating gas pressure.
- set the minimum heating gas pressure.

10.5.1 SETTING THE MAXIMUM DHW GAS PRESSURE (fig. 13 & 22)

Isolate the appliance from the electrical supply, remove the appliance casing as described in 4.7.1.

- Attach a manometer to the outlet test point of the gas valve.
- Remove the protective cover from the gas valve modulator, and disconnect the compensation tube from the gas valve.
- Fully open a hot water outlet (preferably the bath tap).
- Rotate the DHW temperature selector to maximum.
- Restore the electrical supply to the appliance.
- The appliance will now light and after 7-10 seconds, the burner will be at full power.
- Observe the manometer, the reading should be 36.0 mbar.
- If the reading is correct, proceed to 10.5.2
- If the reading is incorrect, turn the maximum adjustment screw (see fig. 13) clockwise to increase the pressure, or anti-clockwise to reduce the pressure.
- Proceed to 10.5.2.10.5.2 SETTING THE MINIMUM DHW GAS PRESSURE (fig. 15 & 23)
- After carrying out section 10.5.1, disconnect one of the black wires attached to the modulator coil.
- The burner will now operate at minimum power.
- Observe the manometer, the reading for Sabre 24 should be 5.1 mbar, for Sabre 28 the reading should be 4.8 mbar.
- If the reading is correct, proceed to section 10.5.3.
- If the reading is incorrect, turn the minimum adjustment screw (fig. 15) clockwise to increase the pressure, or anti-clockwise to reduce the pressure.
- Proceed to section 10.5.3.

10.5.2 SETTING THE MINIMUM DHW GAS PRESSURE (see fig. 13 & 22)

- After carrying out 10.5.1, disconnect one of the black wires attached to the modulator coil.
- The burner will now operate at minimum power.
- Observe the manometer, the reading for Compact 24 should be 5.1 mbar, for Compact 28 the reading should be 4.8 mbar.
- If the reading is correct, proceed to 10.5.3.
- If the reading is incorrect, turn the minimum

adjustment screw (see fig. 13) clockwise to increase the pressure, or anti-clockwise to reduce the pressure.

- Proceed to 10.5.3

10.5.3 SETTING THE MAXIMUM AND MINIMUM CENTRAL HEATING BURNER PRESSURES

- Isolate the appliance from the electrical supply.
- Close the hot water outlet.
- Re-attach the black wire to the modulator coil.
- Remove the PCB cover and temporarily attach a jumper tag to JP2.
- Rotate the heating temperature selector to maximum, and ensure all radiators are turned on with any thermostatic radiator valves set to maximum.
- Restore the electrical supply and ensure there is a call for heat via the appliance time clock and/or room thermostat.
- The appliance should now be operating in the heating mode at maximum output.
- Observe the manometer, the – maximum – reading should be 36.0 mbar.
- Using a small screwdriver, gently rotate the P5 potentiometer if adjustment is necessary.
- To check and/or adjust the minimum heating gas pressure, slowly rotate the heating temperature selector until the burner pressure drops to minimum (should be 6.5 mbar).
- Using a small screwdriver, gently rotate the P4 potentiometer if adjustment is necessary.
- Isolate the appliance from the electrical supply, and remove the jumper tag from JP2.
- Remove the manometer from the gas valve and tighten the outlet test screw.
  Refit the PCB cover and appliance casing.
- Remove the manometer from the gas valve and tighten the outlet test screw.

Refit the PCB cover and appliance casing.

COD. 10025735 - 06/04 - Ed. 1

We Service Support provide after-sales assistance and Technical advice for *Sabre* Boilers

Service Support: 0870-333-0220
Technical Advice: 0141-945-6810

We reserve the right to change the specifications without prior notice. Consumers' statutory rights are not affected