spares & parts online
IBASIS.co.uk©

Vokèra
heating for life

Mynute *i*

High efficiency system boiler

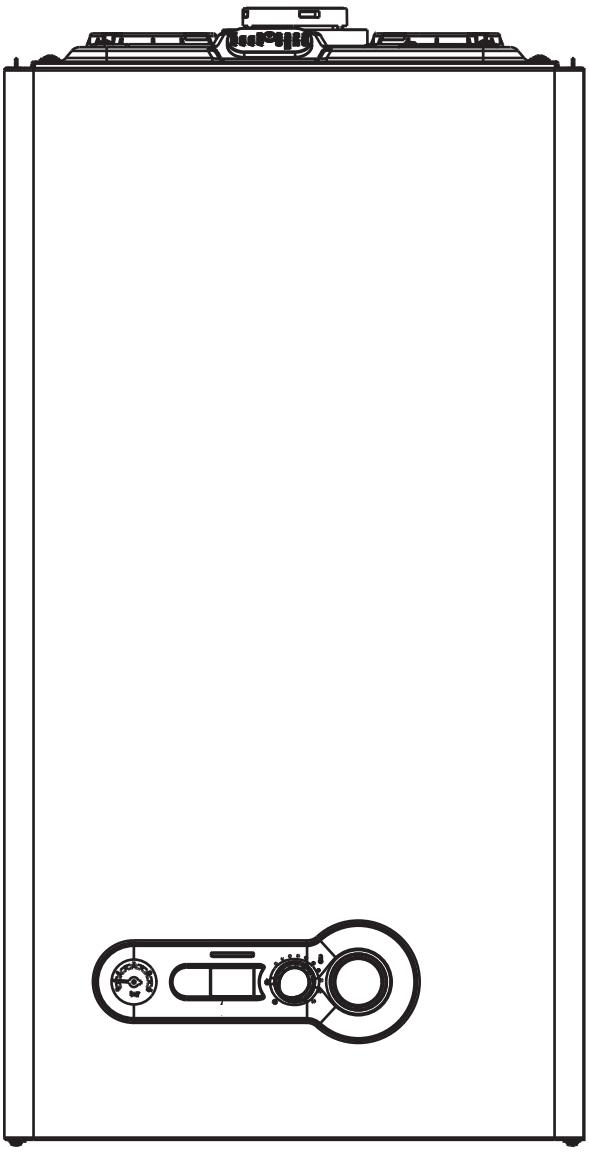

Users Instructions

Installation & Servicing Instructions

CE

Mynute *i20* G.C. N. 41 094 81
Mynute *i30* G.C. N. 41 094 82

THESE INSTRUCTIONS
TO BE RETAINED
BY USER

benchmark
COLLECTIVE MARK
THE MARK OF QUALITY FOR THE INSTALLATION, COMMISSIONING AND SERVICING OF DOMESTIC HEATING AND HOT WATER SYSTEMS

Vokèra is a licensed member of the Benchmark scheme which aims to improve the standards of installation and commissioning of domestic hot water systems in the UK.

Users instructions

Things you should know		Page
1.1	Gas appliances	1
1.2	Electrical supply	1
1.3	Guarantee registration card	1
1.4	Appliance Log Book (UK only)	1
1.5	How does it work?	1
1.6	Dimensions	1
1.7	Clearances required	1
1.8	Frost protection system	1
1.9	Appliance status indicators	1

Getting started		Page
2.1	Before switching ON	3
2.2	Appliance controls	3
2.3	Lighting the boiler	3
2.4	Adjusting the heating temperature	3
2.5	Explanation of features	3
2.6	Automatic temperature control	3

How to...		Page
3.1	How to top-up the system pressure	4
3.2	How to reset the appliance	4
3.3	How to shut down the system for short periods	4
3.4	How to shut down the system for long periods	4
3.5	How to care for the appliance	4

What if...		Page
4.1	What if I suspect a gas leak	4
4.2	What if I have frequently top-up the system	4
4.3	What if the appliance is due its annual service	4
4.4	What if I need to call an engineer	4

Installation and Servicing instructions

Design principles & operating sequence		Page
1.1	Principle components	7
1.2	Mode of operation (at rest)	7
1.3	Mode of operation (heating)	7
1.4	Safety devices	7

Technical data		Page
2.1	Central heating	8
2.2	Gas pressures	8
2.3	Expansion vessel	8
2.4	Dimensions	8
2.5	Clearances	8
2.6	Connections	8
2.7	Electrical	8
2.8	Flue details (concentric)	8
2.8A	Flue details (twin pipes)	8
2.9	Efficiency	8
2.10	Emissions	8
2.11	Pump duty	9

General requirements (UK)		Page
3.1	Related documents	10
3.2	Location of appliance	10
3.3	Gas supply	10
3.4	Flue system	10
3.5	Air supply	10
3.6	Water circulation	10
3.7	Electrical supply	11
3.8	Mounting on a combustible surface	11
3.9	Timber framed buildings	11
3.10	Inhibitors	11

General requirements (EIRE)		Page
3A.1	Related documents	11
3A.2	Location of appliance	11
3A.3	Gas supply	11
3A.4	Flue system	11
3A.5	Air supply	12
3A.6	Water circulation	12
3A.7	Electrical supply	12
3A.8	Mounting on a combustible surface	12
3A.9	Timber framed buildings	12
3A.10	Inhibitors	12
3A.11	Declaration of conformity	12

Installation		Page
4.1	Delivery	13
4.2	Contents	13
4.3	Unpacking	13
4.4	Preparation for mounting the appliance	13
4.5	Fitting the flue	13
4.6	Connecting the gas & water	17
4.7	Electrical connections	17

Commissioning		Page
5.1	Gas supply installation	18
5.2	The heating system	18
5.3	Initial filling of the system	18
5.4	Initial flushing of the system	18
5.5	Pre-operation checks	18
5.6	Initial lighting	18
5.7	Checking gas pressure & combustion analysis	18
5.8	Final flushing of the heating system	18
5.9	Setting the boiler operating temperature	18
5.10	Setting the system design pressure	18
5.11	Regulating the central heating system	19
5.12	Final checks	19
5.13	Instructing the user	19

Servicing		Page
6.1	General	19
6.2	Routine annual servicing	19
6.3	Replacement of components	19
6.4	Component removal procedure	19
6.5	Pump assembly	20
6.6	Safety valve	20
6.7	Lower automatic air release valves	20
6.8	Water pressure switch	20
6.9	Flow thermistor	20
6.10	Return thermistor	20
6.11	Printed circuit board	20
6.12	Gas valve	21
6.13	Electrodes	21
6.14	Flue fan & mixer	21
6.15	Burner	21
6.16	Main heat exchanger	22
6.17	Automatic by-pass	22
6.18	Expansion vessel removal	22
6.19	Condense trap removal	22
6.20	Flue collector removal	23

Checks, adjustments and fault finding		Page
7.1	Checking appliance operation	23
7.2	Appliance modes of operation	23
7.3	Checking the CO_2 & adjusting the valve	24
7.4	Combustion analysis test	24
7.5	Checking the expansion vessel	24
7.6	External faults	25
7.7	Electrical checks	25
7.8	Fault finding	25
7.9	Component values & characteristics	25
7.10	Adjustments	26

Wiring diagrams		Page
8.1	External wiring	29
8.2	Typical control applications	29
8.3	Other devices	29

L.P.G. instructions		Page
9.1	Related documents	31
9.2	Technical data	31
9.3	Converting the appliance gas type	31
9.4	Gas supply	31
9.5	Gas supply installation	31
9.6	Checking the CO_2 and adjusting the gas valve	31

	Benchmark	34-35

	Commissioning	36

USERS INSTRUCTIONS

INTRODUCTION

Dear Customer

Your Vokèra Mynute *i* boiler has been designed to meet and exceed the very latest standards in gas central heating technology, and if cared for, will give years of reliable use and efficiency.
Please therefore take some time to read these instructions carefully.

Do's and Don't's

- **Do** ensure that the system pressure is periodically checked
- **Do** ensure that the boiler should not be used by children or unassisted disabled people
- **Do** ensure that you know how to isolate the appliance in an emergency
- **Do** ensure that you are familiar with the appliance controls
- **Do** ensure that your installer has completed the appliance log book section
- **Do not** attempt to remove the appliance casing or gain internal access
- **Do not** hang clothes etc. over the appliance
- **Do not** forget to have the appliance serviced annually.

This booklet is an integral part of the appliance. It is therefore necessary to ensure that the booklet is handed to the person responsible for the property in which the appliance is located/installed. A replacement copy can be obtained from Vokèra customer services.

1. THINGS YOU SHOULD KNOW

1.1 GAS APPLIANCES

Gas Safety (Installations and Use) Regulations (UK).
In the interests of your safety and that of others it is a legal requirement that all gas appliances are installed and correctly maintained by a competent person and in accordance with the latest regulations.

1.2 ELECTRICAL SUPPLY

Please ensure that this appliance has been properly connected to the electrical supply by means of a double pole isolator or un-switched socket, and that the correct size of fuse (3 AMP) has been fitted.
Warning: this appliance must be earthed!

1.3 GUARANTEE REGISTRATION CARD

Please take the time to fill out your guarantee registration card. The completed warranty card should be posted within 30 days of installation.

1.4 APPLIANCE COMMISSIONING CHECKLIST (UK only)

A checklist section can be found at the rear of the appliance installation booklet. This important document must be completed during the installation/commissioning of your boiler. All GAS SAFE registered installers carry a GAS SAFE ID card, and have a registration number. These details should be recorded in the Benchmark commissioning checklist section within the installation booklet. You can check your installers details by calling GAS SAFE direct on 08004085500. Failure to install and commission the appliance in accordance with the manufacturers instructions will invalidate the warranty. This does not affect your statutory rights.

1.5 HOW DOES IT WORK?

Your **Mynute *i*** boiler supplies heated water to your radiators and hot water to your hot water tank. The central heating is controlled via a time clock and any thermostats that your installer may have fitted. The boiler will light when it receives a request from the time clock via any thermostat that may be installed.
Your Mynute *i* boiler lights electronically and does not have a pilot light. In the unlikely event of a fault developing with your boiler, the supply of gas to the burner will be terminated automatically.

1.6 DIMENSIONS

	Mynute *i20*	**Mynute *i30***
HEIGHT	780 mm	780 mm
WIDTH	400 mm	400 mm
DEPTH	338 mm	388 mm

1.7 CLEARANCES REQUIRED

ABOVE	150 mm
BELOW	150 mm
LEFT SIDE	12 mm
RIGHT SIDE	12 mm
FRONT	600 mm

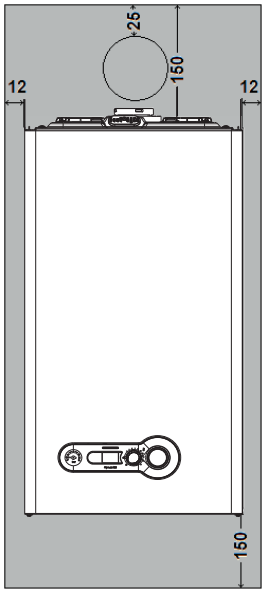

1.8 FROST PROTECTION SYSTEM

The **Mynute *i*** is equipped with a built-in frost protection system, this enables the boiler to over-ride the time controls – even if switched off – and operate the burner and/or pump, should the temperature drop below 5^{0}C for the main. In particular the burner will be in ON status until the main temperature reaches 35°C for CH appliance.
Please note that the frost protection system is designed to protect the appliance only, should frost protection be required for the heating system, additional controls may be required.
NOTE
The frost protection system is reliant on the appliance having a permanent electrical supply, and being in a non-fault condition.

1.9 APPLIANCE STATUS INDICATORS

Your boiler is equipped with a large LCD display that indicates the appliance operating status.

Fig. 1

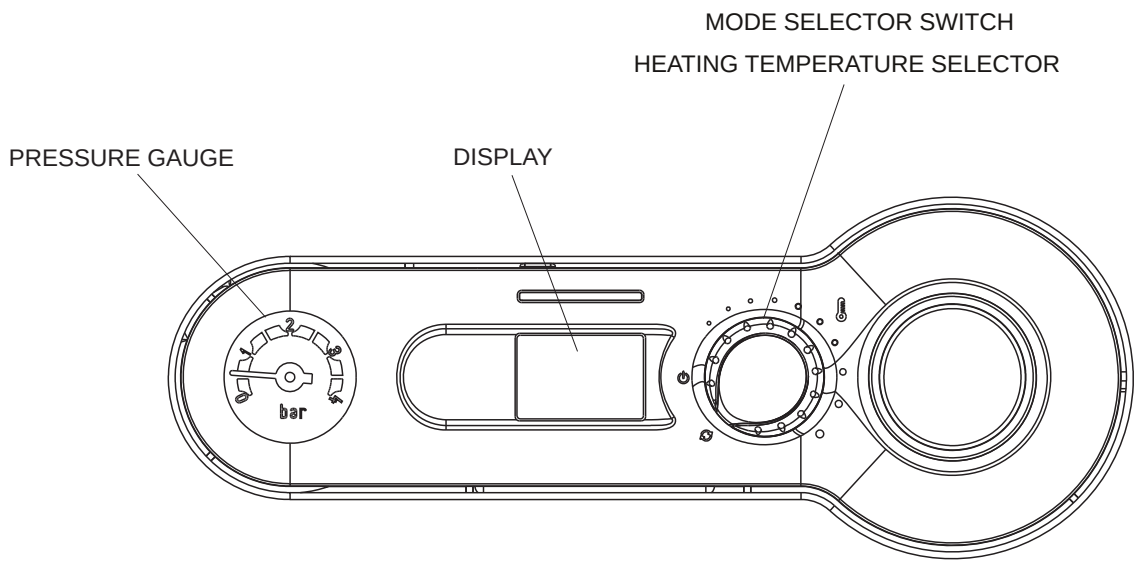

PRESSURE GAUGE

Ensure the system pressure is set correctly (minimum 0.5-bar)

MODE SELECTOR SWITCH/HEATING TEMPERATURE SELECTOR

Mode selector switch:

Heating & hot water - Select this position when you want the boiler to respond to a heating and hot water request from the time-clock programmer **Heating temperature selector**: move the selector clockwise to increase the heating outlet temperature, or counter-clockwise to reduce the temperature (range: 40°C-80°C for standard central heating). The automatic temperature control function (SARA) is set within the blank bullet points.	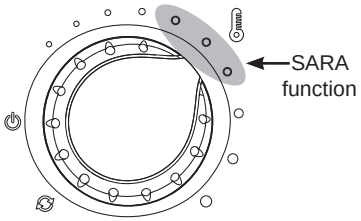
Boiler at OFF/standby - Select this position when you want the boiler to be switched off for short periods (days).	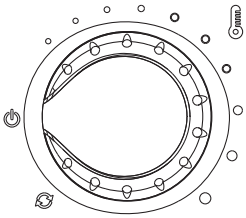
Boiler reset - Select this position if the boiler requires to be reset.	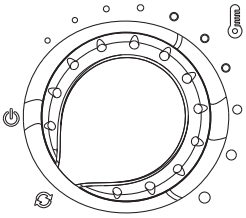
Pressure gauge shows the current pressure of your heating system, the gauge should be set between 1 and 1.5 BAR. When the appliance is operating the gauge may rise or fall slightly, this is quite normal. The minimum permissible level for the safe and efficient operation of the appliance is 0.5 BAR. Should the pressure fall below 0.5 BAR, the boiler may lockout.	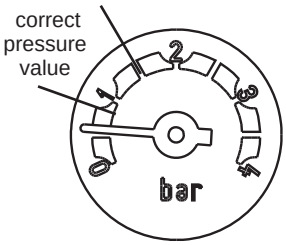

DIGITAL DISPLAY

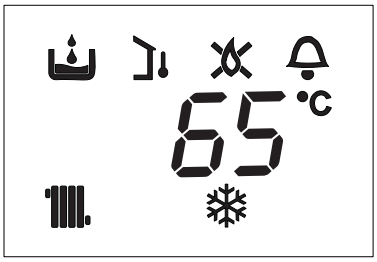

Symbol/Icon	Description
	Displayed when heating mode is active
	Displayed when frost protection function is active
	Displayed if an alarm or fault has been detected
	Displayed when low system pressure has been detected
	Displayed when an external sensor is connected to the boiler
	Flame on
	Displayed if an ignition fault has been detected

2. GETTING STARTED

2.1 BEFORE SWITCHING ON

Before switching the appliance on, please familiarise yourself with:
- how to isolate the appliance from the gas, water, and electricity supplies;
- how to check and top-up – if necessary – the system water pressure;
- the time clock or programmer (if fitted);
- any external thermostats and their functions;
- the appliance controls.

2.2 APPLIANCE CONTROLS (see fig. 1)

The appliance controls are situated on the lower front of the appliance. The appliance controls include:
- pressure gauge;
- appliance mode selector;
- temperature selector

NOTE
The appliance frost protection is active in all the boiler modes. The temperature selector can be used to vary the temperature of the water that circulates around your radiators.

The temperature range is adjustable between 40°C and 80°C.

Refer to the main appliance status table for fault indicator and boiler status.

2.3 LIGHTING THE BOILER

Ensure the gas and electrical supply to the boiler are turned on.
Turn the mode selector switch to the **ON** position. When there is a request for heating or hot water via the time clock or programmer, the boiler will begin an ignition sequence. When the appliance reaches the CH set temperature, the burner will go off for a minimum period of approximately 3 minutes.
When the programmer/time clock or external thermostats heating request has been satisfied, the appliance will switch off automatically.

2.4 ADJUSTING THE HEATING TEMPERATURE

Rotate the temperature selector – clockwise to increase, counter-clockwise to decrease – to the desired temperature setting. The temperature can be set from a minimum of 40°C to a maximum of 80°C (if standard CH mode is selected).

2.5 EXPLANATION OF FEATURES

Although the Vokèra Mynute *i* has been designed for simplicity of use, it utilises the latest in boiler technology, enabling a host of functions to be carried out simultaneously.

2.6 AUTOMATIC TEMPERATURE CONTROL

The automatic temperature control function (SARA), permits the boiler (when the heating temperature selector is set within the blank bullet points) to automatically adjust (raise) the heating. The activation and the disable of the function is visualized on the display.

3. HOW TO...

3.1 HOW TO TOP-UP THE SYSTEM PRESSURE (fig. 1-2)

The system pressure must be checked periodically to ensure the correct operation of the boiler. The needle on the gauge should be reading between 1 and 1.5 BAR when the boiler is in an off position and has cooled to room temperature. If the pressure requires 'topping-up' use the following instructions as a guide.

- Locate the filling valve connections (usually beneath the boiler, see fig. 2).
- Attach the filling loop to both connections.
- Open the filling valve slowly until you hear water entering the system.
- Close the filling valve when the pressure gauge (on the boiler) reads between 1 and 1.5 BAR (see fig. 1).
- Remove the filling loop from the connections.

3.2 HOW TO RESET THE APPLIANCE

When the red fault LED is illuminated, the appliance will require to be reset manually. Before resetting the boiler, check what action is required to be taken, using the information on the fault code table below. Allow a period of two minutes to elapse before rotate the mode selector knob across the position (see fig. 1).

IMPORTANT

If the appliance requires to be reset frequently, it may be indicative of a fault, please contact your installer or Vokèra Customer Services for further advice.

3.3 HOW TO SHUT DOWN THE SYSTEM FOR SHORT PERIODS

The system and boiler can be shut down for short periods by simply turning the time clock to the off position. It is also advisable to turn off the main water supply to the house.

3.4 HOW TO SHUT DOWN THE SYSTEM FOR LONG PERIODS

If the house is to be left unoccupied for any length of time – especially during the winter – the system should be thoroughly drained of all water. The gas, water, and electricity supply to the house should also be turned off. For more detailed advice contact your installer.

3.5 HOW TO CARE FOR THE APPLIANCE

To clean the outer casing use only a clean damp cloth. Do not use any scourers or abrasive cleaners.

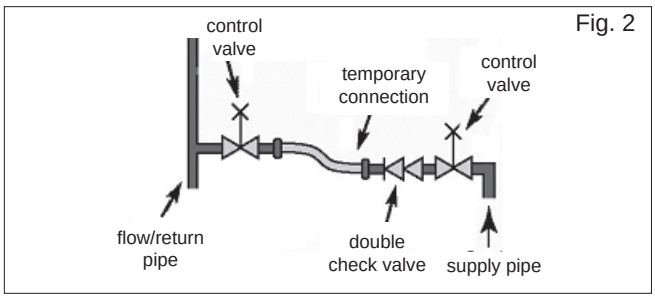

Fig. 2

4. WHAT IF...

4.1 WHAT IF I SUSPECT A GAS LEAK

If you suspect a gas leak, turn off the gas supply at the gas meter and contact your installer or local gas supplier. If you require further advice please contact your nearest Vokèra office.

4.2 WHAT IF I HAVE FREQUENTLY TO TOP-UP THE SYSTEM

If the system regularly requires topping-up, it may be indicative of a leak. Please contact your installer and ask him to inspect the system.

4.3 WHAT IF THE APPLIANCE IS DUE ITS ANNUAL SERVICE

Advice for tenants only

Your landlord should arrange for servicing.

Advice for homeowners

Please contact Vokèra Customer Service **(0844 3910999 (UK) or 056 7755057 (ROI)** if you would prefer a Vokèra service engineer or agent to service your appliance. Alternatively your local GAS SAFE registered engineer may be able to service the appliance for you.

4.4 - WHAT IF I NEED TO CALL AN ENGINEER

If you think your boiler may have developed a fault, please contact your installer or Vokèra Customer Services **(0844 3910999 (UK) or 056 7755057 (ROI)** have all your details to hand including full address and postcode, relevant contact numbers, and your completed appliance log book.

FAULT CODES

ALARM CODE	CAUSE	ALARM TYPE	ACTION
_St	AUTOSTOP	Final	Call engineer
_CL	CALL FOR SERVICE	Temporary then final	Call engineer
A01	Ignition failure, flame not sensed, internal fault	Final	Reset, check appliance operation
A02	Limit thermostat fault	Final	Reset, check appliance operation
A03	Fan tacho signal fault	Final	Reset check appliance operation, check fan
A04	Insufficient system water pressure	Final	Check/refill system pressure, reset, check appliance operation
A06	Jumper tag configuration	Temporary	Check jumper tag configuration
A07	Primary (flow) thermistor fault	Temporary	Check primary thermistor, check wiring
	Primary (flow) thermistor over temperature	Temporary then final	Reset, check appliance operation
	Temperature differential	Final	Reset, check appliance operation, check thermistors
A08	Return thermistor fault	Temporary	Check return thermistor, check wiring
	Return thermistor over temperature	Temporary then final	Reset, check appliance operation
	Temperature differential inverted	Final	Reset, check pump, ensure there is sufficient circulation around heating circuit/s
A09	Flue thermistor or flue thermistor counter fault	Temporary	Check flue thermistor counter at power on, check flue thermistor, check wiring
	Flue thermistor over temperature	Final	Reset, check appliance operation
A11	False flame	Temporary	None
A77	Low temperature thermostat fault	Temporary	Check low temperature thermostat
Adj	Calibration	Na	None
ACO	Service operation	Na	None
	Purge cycle mode active	Na	None
	Flame ON	Na	None
Hours	Stand-by	Na	None
- -	OFF	Na	None

INTRODUCTION

All installers are asked to follow the Benchmark Scheme by adhering to the Code of Practise, which can be obtained from www.centralheating.co.uk.

The ***Mynute i*** are high-efficiency system boilers with outputs of 20kW and 30kW. These appliances – by design – incorporate electronic ignition, circulating pump, expansion vessel, safety valve, pressure gauge and automatic by-pass.
The ***Mynute i*** range is produced as room sealed, category II2H3P appliances, suitable for internal wall mounting applications only. Each appliance is provided with a fan powered flue outlet with an annular co-axial combustion air intake that can be rotated – horizontally – through 360 degrees for various horizontal or vertical applications. The **Mynute *i*** can also be used with the Vokèra twin flue system.
The ***Mynute i*** is approved for use with C13 & C33 type flue applications.
These appliances are designed for use with a sealed system only; consequently they are not intended for use on open vented systems.
This booklet is an integral part of the appliance. It is therefore necessary to ensure that the booklet is handed to the person responsible for the property in which the appliance is located/ installed. A replacement copy can be obtained from Vokèra customer services.

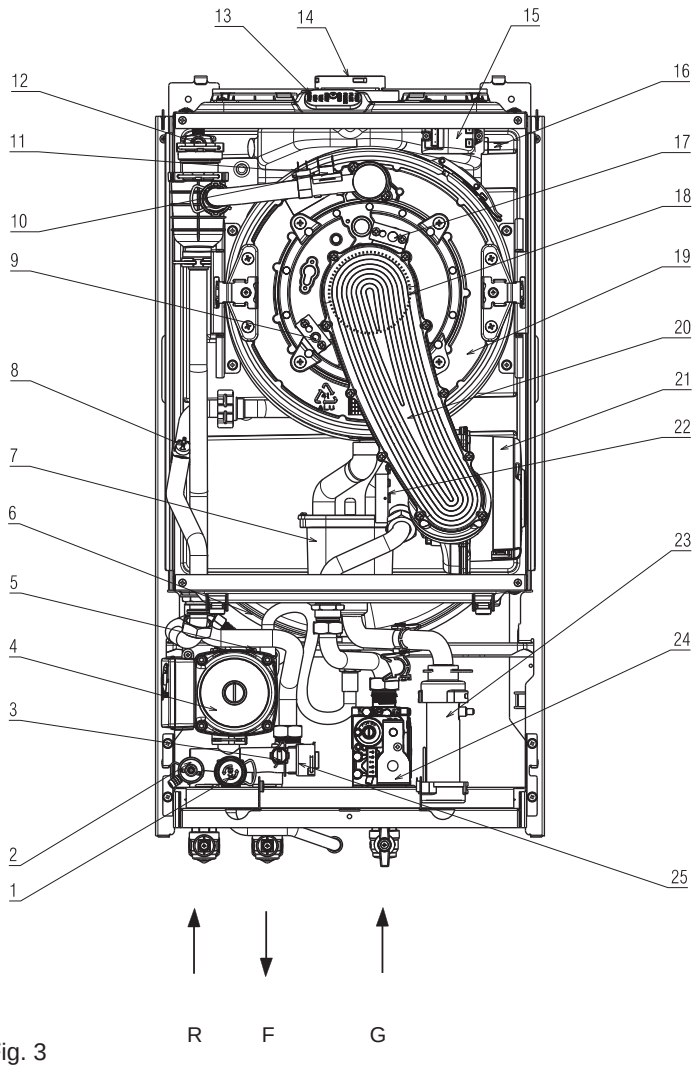

Fig. 3

General layout

1	Safety valve
2	Drain valve
3	Pressure switch
4	Pump
5	Bottom auto air vent (AAV)
6	Expansion vessel
7	Condense trap
8	Return thermistor (NTC)
9	Sensing Electrode
10	High limit thermostat
11	Flow thermistor (NTC)
12	Top AAV+De-aerator
13	Flue gas analysis test point
14	Flue outlet & air intake
15	Ignition transformer
16	Flues thermistor (NTC)
17	Spark Electrode
18	Burner
19	Main heat exchanger
20	Conveyor
21	Fan assembly
22	Mixer
23	Condense trap
24	Gas valve
25	Three way porte valve
R	Heating return connection
F	Heating flow connection
G	Gas connection

SECTION 1 - DESIGN PRINCIPLES AND OPERATING SEQUENCE

1.1 PRINCIPLE COMPONENTS

- A fully integrated electronic control board featuring electronic temperature control, anti-cycle control, pump over-run, self-diagnostic fault indicator, full air/gas modulation
- Aluminium heat exchanger
- Electronic ignition with flame supervision
- Integral high-head pump
- Fan
- Expansion vessel
- Water pressure switch
- Flue sensor
- Pressure gauge
- Safety valve

1.2 MODE OF OPERATION (at rest)

When the appliance is at rest and there are no requests for heating or hot water, the following functions are active:

- frost-protection system – the frost-protection system protects the appliance against the risk of frost damage. For CH line, if the main temperature falls to 5°C, the appliance will function on minimum power until the temperature on main reaches 35°C.
- anti-block function – the anti-block function enables the pump to be energised for short periods, when the appliance has been inactive for more than 24-hours.

1.3 MODE OF OPERATION (Heating)

When there is a request for heat via the time clock and/or any external control, the pump and fan are started, the fan speed will modulate until the correct signal voltage is received at the control PCB. At this point an ignition sequence is enabled.
Ignition is sensed by the electronic circuit to ensure flame stability at the burner. Once successful ignition has been achieved, the electronic circuitry increases the gas rate to 75% for a period of 15 minutes. Thereafter, the boiler's output will either be increase to maximum or modulate to suit the set requirement. When the appliance reaches the desired temperature the burner will shut down and the boiler will perform a three-minute anti-cycle (timer delay).
When the request for heat has been satisfied the appliance pump and fan may continue to operate to dissipate any residual heat within the appliance.

1.4 SAFETY DEVICES

When the appliance is in use, safe operation is ensured by:

- a water pressure switch that monitors system water pressure and will de-activate the pump, fan, and burner should the system water pressure drop below the rated tolerance;
- fan speed sensor to ensure safe operation of the burner;
- a high limit thermostat that over-rides the temperature control circuit to prevent or interrupt the operation of the burner;
- flame sensor that will shut down the burner when no flame signal is detected;
- flue sensor;
- a safety valve which releases excess pressure from the primary circuit.

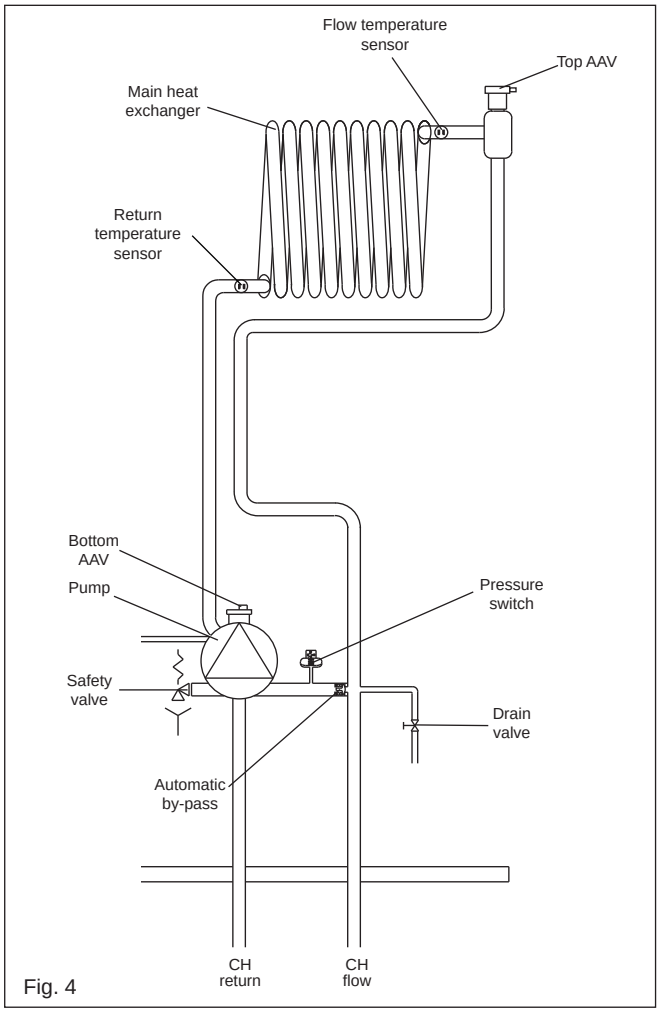

Fig. 4

SECTION 2 - TECHNICAL DATA

2.1 Central Heating	Mynute i20		Mynute i30	
Heat input (kW)	20.00		30.00	
Maximum heat output (kW) 60/80°C	19.62		29.25	
	G20	G31	G20	G31
Minimum heat output (kW) 60/80°C	2.76	3.95	3.50	4.87
Maximum heat output (kW) 30/50°C	21.44		31.77	
Minimum heat output (kW) 30/50°C	3.00	4.20	3.80	5.29
Minimum working pressure	0.25-0.45 bar			
Maximum working pressure	2.5 bar			
Minimum flow rate	300 l/h			
2.3 Gas Pressures	**Mynute i20**		**Mynute i30**	
Inlet pressure (G20)	20.0 mbar			
Heating maximum gas rate (m^3/hr)	2.12		3.17	
Minimum gas rate (m^3/hr)	0.30		0.38	
Injector size (mm)	4.70 flap side - 4.20 free side		5.10 flap side - 4.70 free side	
2.4 Expansion Vessel	**Mynute i20**		**Mynute i30**	
Capacity	8 litres			
Maximum system volume	76 litres			
Pre-charge pressure	1 bar			
2.5 Dimensions	**Mynute i20**		**Mynute i30**	
Height (mm)	780			
Width (mm)	400			
Depth (mm)	338		388	
Dry weight (kg)	40		38	
2.6 Clearances	**Mynute i20**		**Mynute i30**	
Sides	12mm			
Top	150mm from casing or 25mm above flue elbow (whichever is applicable)			
Bottom	150mm			
Front	600mm			
2.7 Connections	**Mynute i20**		**Mynute i30**	
Flow & return	22mm			
Gas	15mm			
Safety valve	15mm			
Condense	21mm			
2.8 Electrical	**Mynute i20**		**Mynute i30**	
Power consumption (Watts)	102		118	
Voltage (V/Hz)	230/50			
Internal fuse	3.15A T (for PCB) - 3.15A F (for connections block)			
External fuse	3A			
2.9 Flue Details (concentric 60-100)	**Mynute i20**		**Mynute i30**	
Maximum horizontal flue length (60/100mm)	7.80m		7.85m	
Maximum vertical flue length (60/100mm)	8.80m		8.85m	
2.9A Flue Details (concentric 80-125)	**Mynute i20**		**Mynute i30**	
Maximum horizontal flue length (80/125mm)	20m		14.85m	
Maximum vertical flue length (80/125mm)	21m		15.85m	
2.9B Flue Details (twin pipes)	**Mynute i20**		**Mynute i30**	
Maximum horizontal flue length (80mm/80mm)	50m/50m		38m/38m	
Maximum vertical flue length (80mm/80mm)	50m/50m		38m/38m	
2.10 Efficiency	**Mynute i20**		**Mynute i30**	
UK (%) 2005	90.30		90.03	
2.11 Emissions	**Mynute i20**		**Mynute i30**	
CO2 @ maximum output (%)	9.0			
CO2 @ minimum output (%)	9.0			
CO @ maximum output (ppm)	150			
CO @ minimum output (ppm)	10		5	
Nox rating	class 5			

2.11 PUMP DUTY

Fig. 6 shows the flow-rate available – after allowing for pressure loss through the appliance – for system requirements. When using this graph, apply only the pressure loss of the system.

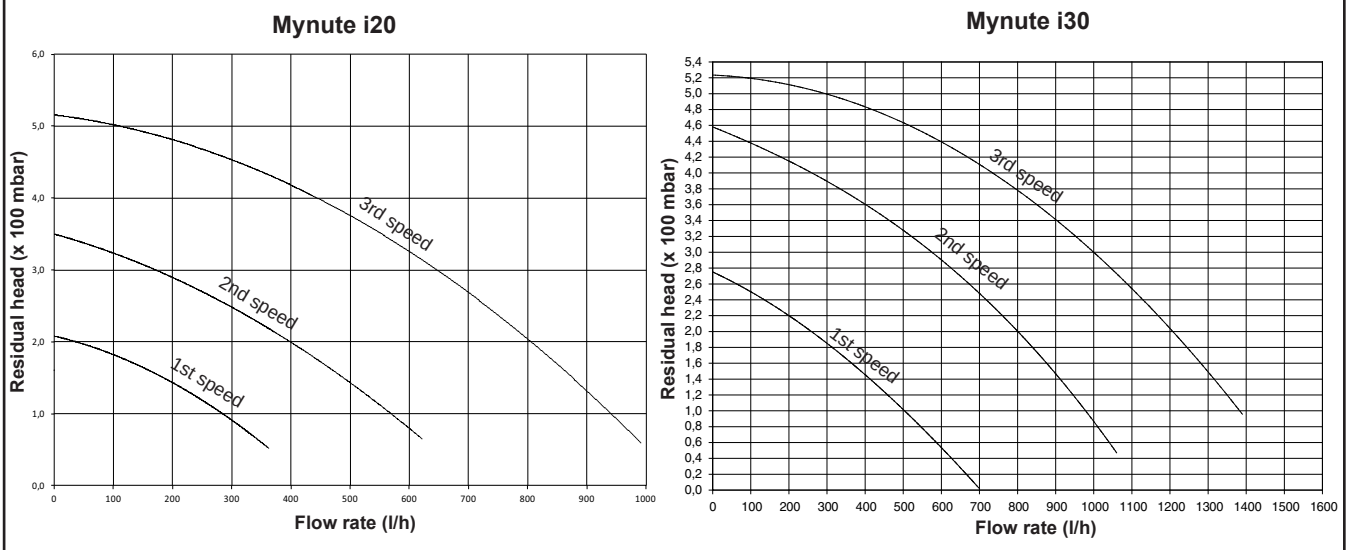

Fig. 5

Fig. 6

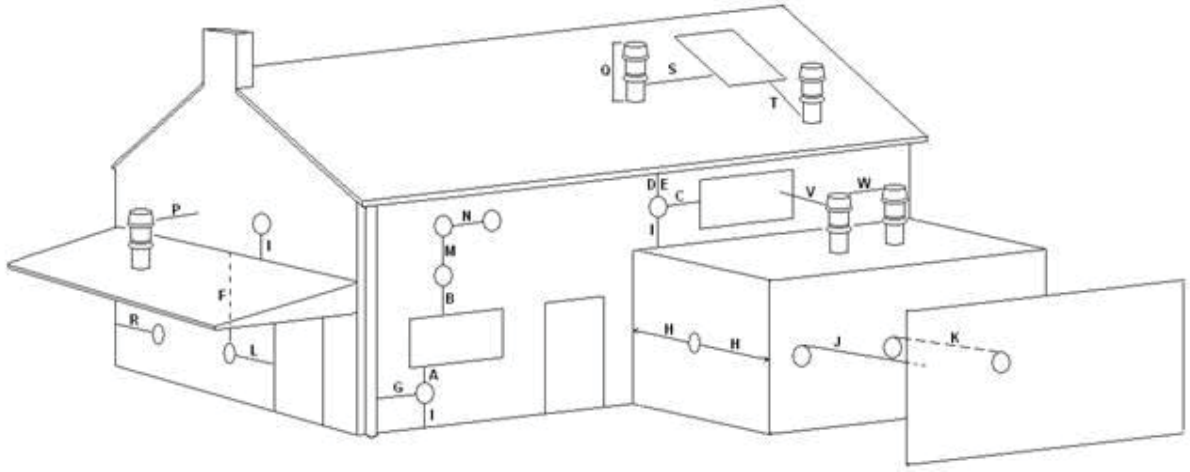

Key	Location	Minimum distance
A	Below an opening (window, air-brick, etc.)	300 mm
B	Above an opening (window, air-brick, etc.)	300 mm
C	To the side of an opening (window, air-brick, etc.)	300 mm
D	Below gutter, drain-pipe, etc.	25 mm
E	Below eaves	25 mm
F	Below balcony, car-port roof, etc.	25 mm
G	To the side of a soil/drain-pipe, etc.	25 mm (60mm for 80/125 - 5” flue)
H	From internal/external corner	25 mm (60mm for 80/125 - 5” flue)
I	Above ground, roof, or balcony level	300 mm
J	From a surface or boundary facing the terminal	600 mm
K	From a terminal facing a terminal	1200 mm
L	From an opening in the car-port into the building	1200 mm
M	Vertically from a terminal on the same wall	1500 mm
N	Horizontally from a terminal on the same wall	300 mm
P	From a structure to the side of the vertical terminal	300 mm
Q	From the top of the vertical terminal to the roof flashing	As determined by the fixed collar of the vertical terminal
R	To the side of a boundary	300 mm
S	To the side of an opening or window on a pitched roof	600 mm
T	Below an opening or window on a pitched roof	2000 mm
V	From a vertical terminal to an adjacent opening (window, air-brick, etc.)	(call Vokera technical for advice)
W	From a vertical terminal to an adjacent vertical terminal	300 mm (only if both terminals are the same hight)

SECTION 3 - GENERAL REQUIREMENTS (UK)

This appliance must be installed by a competent person in accordance with the Gas Safety (Installation & Use) Regulations.

3.1 RELATED DOCUMENTS

The installation of this boiler must be in accordance with the relevant requirements of the Gas Safety (Installation & Use) Regulations, the local building regulations, the current I.E.E. wiring regulations, the bylaws of the local water undertaking, the Building Standards (Scotland) Regulation and Building Standards (Northern Ireland) Regulations.
It should be in accordance also with any relevant requirements of the local authority and the relevant recommendations of the following British Standard Codes of Practice.

3.2 LOCATION OF APPLIANCE

The appliance may be installed in any room or internal space, although particular attention is drawn to the requirements of the current I.E.E. wiring regulations, and in Scotland, the electrical provisions of the Building Regulations, with respect to the installation of the appliance in a room or internal space containing a bath or shower.

BS 5440	**PART 1**	**FLUES**
BS 5440	**PART 2**	**FLUES & VENTILATION**
BS 5449	**PART 1**	**FORCED CIRCULATION HOT WATER SYSTEMS**
BS 5546		**INSTALLATION OF GAS HOT WATER SUPPLIES FOR DOMESTIC PURPOSES**
BS 6798		**INSTALLATION OF BOILERS OF RATED INPUT NOT EXCEEDING 60kW**
BS 6891		**LOW PRESSURE INSTALLATION PIPES**
BS 7074	**PART 1**	**APPLICATION, SELECTION, AND INSTALLTION OF EXPANSION VESSELS AND ANCILLARY EQUIPMENT FOR SEALED WATER SYSTEMS**

When an appliance is installed in a room or internal space containing a bath or shower, the appliance or any control pertaining to it must not be within reach of a person using the bath or shower. The location chosen for the appliance must permit the provisions of a safe and satisfactory flue and termination. The location must also permit an adequate air supply for combustion purposes and an adequate space for servicing and air circulation around the appliance. Where the installation of the appliance will be in an unusual location special procedures may be necessary, BS 6798 gives detailed guidance on this aspect. A compartment used to enclose the appliance must be designed and constructed specifically for this purpose. An existing compartment/cupboard may be utilised provided that it is modified to suit. Details of essential features of compartment/cupboard design including airing cupboard installations are given in BS 6798. This appliance is not suitable for external installation.

3.3 GAS SUPPLY

The gas meter – as supplied by the gas supplier – must be checked to ensure that it is of adequate size to deal with the maximum rated input of all the appliances that it serves. Installation pipes must be fitted in accordance with BS 6891.
Pipe work from the meter to the appliance must be of adequate size. Pipes of a smaller size than the appliance gas inlet connection must not be used. The installation must be tested for tightness in accordance with BS6891. If the gas supply serves more than one appliance, it must be ensured that an adequate supply is maintained to each appliance when they are in use at the same time.

3.4 FLUE SYSTEM

The terminal should be located where the dispersal of combustion products is not impeded and with due regard for the damage and discoloration that may occur to building products located nearby. The terminal must not be located in a place where it is likely to cause a nuisance (see fig. 6). In cold and/or humid weather, water vapour will condense on leaving the terminal; the effect of such pluming must be considered.
If installed less than 2m above a pavement or platform to which people have access (including balconies or flat roofs) the terminal must be protected by a guard of durable material. The guard must be fitted centrally over the terminal. Refer to BS 5440 Part 1, when the terminal is 0.5 metres (or less) below plastic guttering or 1 metre (or less) below painted eaves.

3.5 AIR SUPPLY

The following notes are intended for general guidance only. This appliance is a room-sealed, fan-flued boiler, consequently it does not require a permanent air vent for combustion air supply. When installed in a cupboard or compartment, ventilation for cooling purposes is also not required.

3.6 WATER CIRCULATION

Detailed recommendations are given in BS 5449 Part 1 and BS 6798. The following notes are for general guidance only.

3.6.1 PIPEWORK

It is recommended that copper tubing to BS 2871 Part 1 is used in conjunction with soldered capillary joints. Where possible pipes should have a gradient to ensure air is carried naturally to air release points and that water flows naturally to drain cocks. Except where providing useful heat, pipes should be insulated to avoid heat loss and in particular to avoid the possibility of freezing. Particular attention should be paid to pipes passing through ventilated areas such as under floors, loft space and void areas.

3.6.2 AUTOMATIC BY-PASS

The appliance has a built-in automatic by-pass, consequently there is no requirement for an external by-pass, however the design of the system should be such that it prevents boiler 'cycling'.

3.6.3 DRAIN COCKS

These must be located in accessible positions to facilitate draining of the appliance and all water pipes connected to the appliance. The drain cocks must be manufactured in accordance with BS 2879.

3.6.4 AIR RELEASE POINTS

These must be positioned at the highest points in the system where air is likely to be trapped. They should be used to expel trapped air and allow complete filling of the system.

3.6.5 EXPANSION VESSEL

The appliance has an integral expansion vessel to accommodate the increased volume of water when the system is heated. It can accept up to 8 litres of expansion from within the system, generally this is sufficient, however if the system has an unusually high water content, it may be necessary to provide additional expansion capacity (see 6.18).

3.6.6 FILLING POINT

A method for initial filling of the system and replacing water lost during servicing etc. directly from the mains supply, should be provided (see fig. 8). This method of filling complies with the current Water Supply (Water Fittings) Regulations 1999 and Water Bylaws 2000 (Scotland). If an alternative location.

3.6.7 LOW PRESSURE SEALED SYSTEM

An alternative method of filling the system would be from an independent make-up vessel or tank mounted in a position at least 1 metre above the highest point in the system and at least 5 metres above the boiler (see fig. 8).
The cold feed from the make-up vessel or tank must be fitted with an approved non-return valve and stopcock for isolation purposes. The feed pipe should be connected to the return pipe as close to the boiler as possible.

3.6.8 FREQUENT FILLING

Frequent filling or venting of the system may be indicative of a leak. Care should be taken during the installation of the appliance to ensure all aspects of the system are capable of withstanding pressures up to at least 3 bar.

3.7 ELECTRICAL SUPPLY

The appliance is supplied for operation on 230V @ 50Hz electrical supply; it must be protected with a 3-amp fuse. The method of connection to the mains electricity supply must allow for complete isolation from the supply. The preferred method is by using a double-pole switch fused spur with a contact separation of at least 3,5mm (3° high-voltage category). The switch must only supply the appliance and its corresponding controls, i.e. time clock, room thermostat, etc. Alternatively an un-switched shuttered socket with a fused 3-pin plug both complying with BS 1363 is acceptable.

3.8 MOUNTING ON A COMBUSTIBLE SURFACE

If the appliance is to be fitted on a wall of combustible material, there is no requirement for a sheet of fireproof material to protect the wall.

3.9 TIMBER FRAMED BUILDINGS

If the appliance is to be fitted in a timber framed building, it should be fitted in accordance with the Institute of Gas Engineers publication (IGE/UP/7) 'Guide for Gas Installations in Timber Frame Buildings'.

3.10 INHIBITORS

Vokèra recommend that an inhibitor - suitable for use with aluminium heat exchangers - is used to protect the boiler and system from the effects of corrosion and/or electrolytic action. The inhibitor must be administered in strict accordance with the manufacturers instructions*.
*Water treatment of the complete heating system - including the boiler - should be carried out in accordance with BS 7593 and the Domestic Water Treatment Association's (DWTA) code of practice.

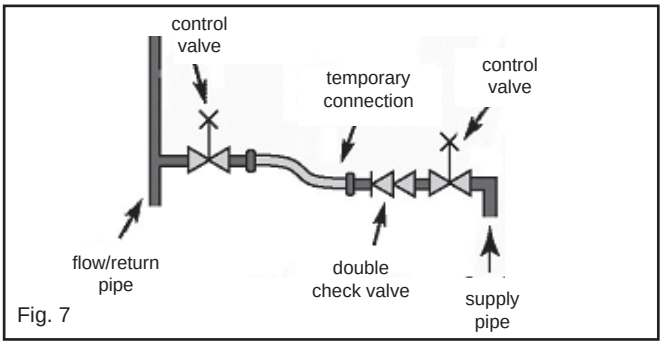

Fig. 7

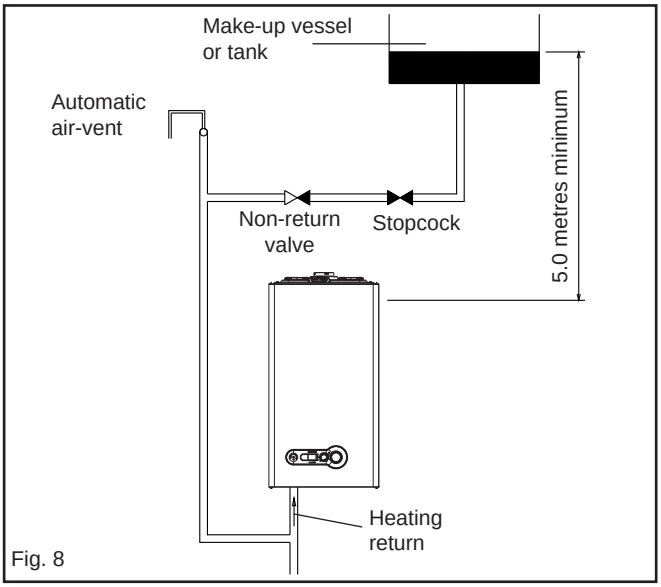

Fig. 8

SECTION 3A - GENERAL REQUIREMENTS (EIRE)

This appliance must be installed by a competent person in accordance with and defined by, the Standard Specification (Domestic Gas Installations) Declaration (I.S. 813).

3A.1 RELATED DOCUMENTS

The installation of this boiler must be in accordance with the relevant requirements of the local building regulations, the current ETCI National Rules for Electrical Installations and the bylaws of the local water undertaking.
It should be in accordance also with any relevant requirements of the local and/or district authority.

3A.2 LOCATION OF APPLIANCE

The appliance may be installed in any room or internal space, although particular attention is drawn to the requirements of the current ETCI National Rules for Electrical Installations, and I.S. 813, Annex K.
When an appliance is installed in a room or internal space containing a bath or shower, the appliance or any control pertaining to it must not be within reach of a person using the bath or shower.
The location chosen for the appliance must permit the pro Mynute *i* of a safe and satisfactory flue and termination. The location must also permit an adequate air supply for combustion purposes and an adequate space for servicing and air circulation around the appliance. Where the installation of the appliance will be in an unusual location special procedures may be necessary, refer to I.S. 813 for detailed guidance on this aspect.
A compartment used to enclose the appliance must be designed and constructed specifically for this purpose. An existing compartment/cupboard may be utilised provided that it is modified to suit.
This appliance is not suitable for external installation.

3A.3 GAS SUPPLY

The gas meter – as supplied by the gas supplier – must be checked to ensure that it is of adequate size to deal with the maximum rated input of all the appliances that it serves. Installation pipes must be fitted in accordance with I.S. 813.
Pipe work from the meter to the appliance must be of adequate size. Pipes of a smaller size than the appliance gas inlet connection must not be used. The installation must be tested for tightness in accordance with I.S. 813.
If the gas supply serves more than one appliance, it must be ensured that an adequate supply is maintained to each appliance when they are in use at the same time.

3A.4 FLUE SYSTEM

The terminal should be located where the dispersal of combustion products is not impeded and with due regard for the damage and discoloration that may occur to building products located nearby. The terminal must not be located in a place where it is likely to cause a nuisance (see I.S. 813).
In cold and/or humid weather, water vapour will condense on leaving the terminal; the effect of such pluming must be considered.
If installed less than 2m above a pavement or platform to which people have access (including balconies or flat roofs)

the terminal must be protected by a guard of durable material. The guard must be fitted centrally over the terminal. Refer to I.S. 813, when the terminal is 0.5 metres (or less) below plastic guttering or 1 metre (or less) below painted eaves.

3A.5 AIR SUPPLY

The following notes are intended for general guidance only.
This appliance is a room-sealed, fan-flued boiler, consequently it does not require a permanent air vent for combustion air supply. When installed in a cupboard or compartment, ventilation for cooling purposes is also not required.

3A.6 WATER CIRCULATION

Specific recommendations are given in I.S. 813. The following notes are for general guidance only.

3A.6.1 PIPEWORK

It is recommended that copper tubing be used in conjunction with soldered capillary joints.
Where possible pipes should have a gradient to ensure air is carried naturally to air release points and that water flows naturally to drain cocks.
Except where providing useful heat, pipes should be insulated to avoid heat loss and in particular to avoid the possibility of freezing. Particular attention should be paid to pipes passing through ventilated areas such as under floors, loft space and void areas.

3A.6.2 AUTOMATIC BY-PASS

The appliance has a built-in automatic by-pass, consequently there is no requirement for an external by-pass, however the design of the system should be such that it prevents boiler 'cycling'.

3A.6.3 DRAIN COCKS

These must be located in accessible positions to facilitate draining of the appliance and all water pipes connected to the appliance.

3A.6.4 AIR RELEASE POINTS

These must be positioned at the highest points in the system where air is likely to be trapped. They should be used to expel trapped air and allow complete filling of the system.

3A.6.5 EXPANSION VESSEL

The appliance has an integral expansion vessel to accommodate the increased volume of water when the system is heated. It can accept up to 8 litres of expansion from within the system, generally this is sufficient, however if the system has an unusually high water content, it may be necessary to provide additional expansion capacity (see 6.18).

3A.6.6 FILLING POINT

A method for initial filling of the system and replacing water lost during servicing etc. is provided (see fig. 7). You should ensure this method of filling complies with the local water authority regulations.

3A.6.7 LOW PRESSURE SEALED SYSTEM

An alternative method of filling the system would be from an independent make-up vessel or tank mounted in a position at least 1 metre above the highest point in the system and at least 5 metres above the boiler (see fig. 8). The cold feed from the make-up vessel or tank must be fitted with an approved non-return valve and stopcock for isolation purposes. The feed pipe should be connected to the return pipe as close to the boiler as possible.

3A.6.8 FREQUENT FILLING

Frequent filling or venting of the system may be indicative of a leak. Care should be taken during the installation of the appliance to ensure all aspects of the system are capable of withstanding pressures up to at least 3 bar.

3A.7 ELECTRICAL SUPPLY

The appliance is supplied for operation on 230V @ 50Hz electrical supply; it must be protected with a 3-amp fuse. The method of connection to the mains electricity supply must allow for complete isolation from the supply. The preferred method is by using a double-pole switch fuse spur with a contact separation of at least 3,5 mm (3° high-voltage category). The switch must only supply the appliance and its corresponding controls, i.e. time clock, room thermostat, etc.

3A.8 MOUNTING ON A COMBUSTIBLE SURFACE

If the appliance is to be fitted on a wall of combustible material, there is no requirement for a sheet of fireproof material to protect the wall.

3A.9 TIMBER FRAMED BUILDINGS

If the appliance is to be fitted in a timber framed building, it should be fitted in accordance with I.S. 813 and local Building Regulations.
The Institute of Gas Engineers publication (IGE/UP/7) 'Guide for Gas Installations in Timber Frame Buildings' gives specific advice on this type of installation.

3A.10 INHIBITORS

Vokèra recommend that an inhibitor - suitable for use with aluminium heat exchangers - is used to protect the boiler and system from the effects of corrosion and/or electrolytic action. The inhibitor must be administered in strict accordance with the manufacturers instructions*.
*Water treatment of the complete heating system - including the boiler - should be carried out in accordance with I.S. 813 and the Domestic Water Treatment Association's (DWTA) code of practice.

3A.11 DECLARATION OF CONFORMITY

A Declaration of Conformity (as defined in I.S. 813) must be provided on completion of the installation.
A copy of the declaration must be given to the responsible person and also to the gas supplier if required.

SECTION 4 - INSTALLATION

4.1 DELIVERY

Due to the weight of the appliance it may be necessary for two people to lift and attach the appliance to its mounting. The appliance is contained within a heavy-duty cardboard carton. Lay the carton on the floor with the writing the correct way up.

4.2 CONTENTS

Contained within the carton is:

- the boiler
- the wall bracket
- carton template
- an accessories pack containing appliance service connections and washers
- the instruction pack containing the installation, servicing & user instructions, guarantee registration card and a 3-amp fuse.

4.3 UNPACKING

At the top of the carton pull both sides open – do not use a knife – unfold the rest of the carton from around the appliance, carefully remove all protective packaging from the appliance and lay the accessories etc. to one side. Protective gloves should be used to lift the appliance, the appliance back-frame should be used for lifting points.

4.4 PREPARATION FOR MOUNTING THE APPLIANCE

The appliance should be mounted on a smooth, vertical surface, which must be capable of supporting the full weight of the appliance. Care should be exercised when determining the position of the appliance with respect to hidden obstructions such as pipes, cables, etc.
When the position of the appliance has been decided – using the template supplied – carefully mark the position of the wall mounting bracket (see fig. 11) and flue-hole (if applicable).

4.5 FITTING THE FLUE

The top flue outlet permits both horizontal and vertical flue applications to be considered, alternatively, the Vokèra twin flue system can be utilised if longer flue runs are required.

4.5.1 CONCENTRIC HORIZONTAL FLUE

(For concentric vertical flue, see 4.5.2).
(For twin flue applications, see 4.5.3).
The appliance can be used with either the Vokèra condensing 60/100mm concentric flue system or the optional 80/125mm concentric flue system.

NOTE

These instructions relate **only** to the Vokèra condensing 60/100mm concentric flue system. For specific details on the installation of the 80/125mm concentric flue system please refer to the instructions supplied. The appliance flue outlet elbow can be rotated through 360º on its vertical axis. In addition the flue may be extended from the outlet elbow in the horizontal plane (see 2.9). A reduction must also be made to the maximum length (see table below) when additional bends are used.

Reduction for additional bends

Bend	Reduction in maximum flue length for each bend
45º bend	1.0 metre (60/100) - 1.0 metre (80/125)
90º bend	1.0 metre (60/100) - 1.5 metre (80/125)

Horizontal flue terminals and accessories

Part No.	Description	Length
29450120	Horizontal flue kit	900 mm
29450121	Telescopic flue kit	455/630 mm
522	Plume management kit	1370 mm
29450123	90-degree bend	N/A
29450124	45-degree bends (pair)	N/A
29450125	500mm extension	500 mm
29450126	1000mm extension	1000 mm
29450127	2000m extension	2000 mm
29450128	Telescopic extension	372/519 mm
529	Wall bracket pack (5)	208mm

Using the template provided, mark and drill a 125mm hole for the passage of the flue pipe. The hole should be drilled to ensure any condense fluid that forms, is allowed to drain back to the appliance (see fig. 12-14). The fixing holes for the wall-mounting bracket should now be drilled and plugged, an appropriate type and quantity of fixing should be used to ensure that the bracket is mounted securely.
Once the bracket (**A**) has been secured to the wall, mount the appliance onto the bracket.

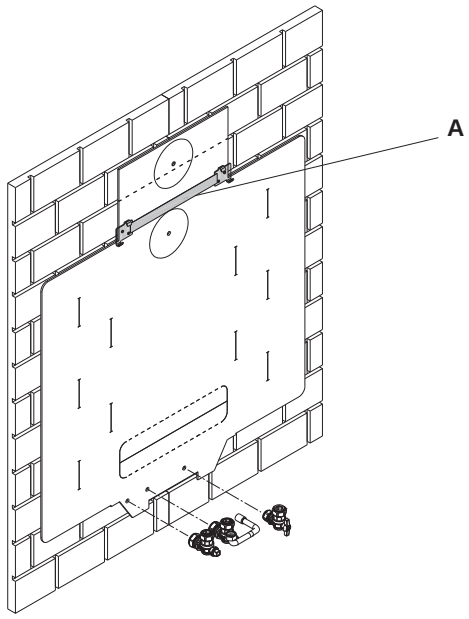

Fig. 9

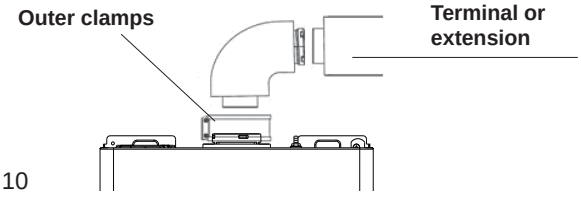

Fig. 10

FITTING THE HORIZONTAL FLUE KIT

Carefully measure the distance from the centre of the appliance flue outlet to the edge of the finished outside wall (dimension X). Add 65mm to dimension X to give you Dimension Y (see fig 16). Measure dimension Y from the terminal end of the concentric flue pipe and cut off the excess ensuring any burrs are removed. Pass the concentric flue pipe through the previously drilled hole. Fit the flue bend to the boiler flue outlet and insert the concentric flue pipe into the flue bend ensuring the correct seal is made. Using the clamp, gasket, and screws supplied, secure the flue bend to the appliance flue spigot.

NOTE

Fit the internal (white) trim to the flue assembly prior to connecting the flue pipe to the bend.
You must ensure that the entire flue system is properly supported and connected. Seal the flue assembly to the wall using cement or a suitable alternative that will provide satisfactory weatherproofing. The exterior trim can now be fitted.

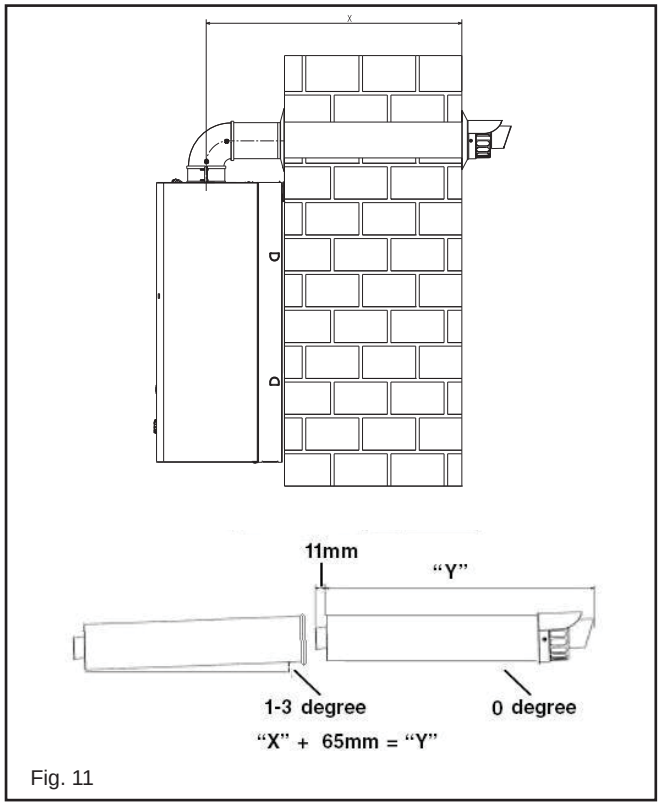

Fig. 11

EXTENDING THE FLUE

Connect the bend – supplied with the terminal kit – to the top of the boiler using clamp (supplied) see fig. 10. The additional bends & extensions have push-fit connections, care should be taken to ensure that the correct seal is made when assembling the flue system. Connect the required number of flue extensions or bends (up to the maximum equivalent flue length) to the flue terminal (see fig. 10-12). The flue system should have a minimum of 1º; maximum of 3º rise from the boiler to outside, to ensure any condense fluid that forms, is allowed to drain back to the appliance.

NOTE

When cutting an extension to the required length, you must ensure that the excess is cut from the plain end of the extension. Remove any burrs, and check that all seals are located properly. You must ensure that the entire flue system is properly supported and connected. Seal the flue assembly to the wall using cement or a suitable alternative that will provide satisfactory weatherproofing. The interior and exterior trim can now be fitted.

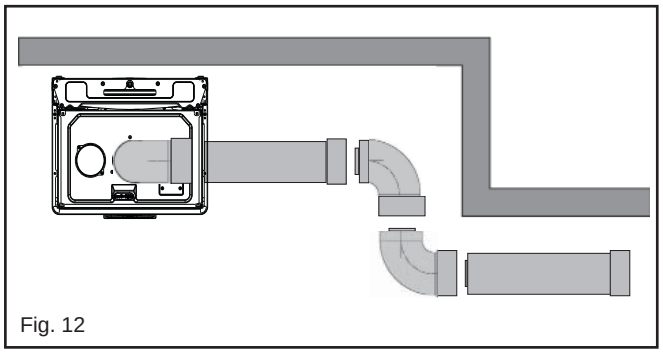
Fig. 12

4.5.1.2 FITTING THE REAR FLUE (fig. 13) (rear flue outlet only)

Using the template provided, mark and drill a 125mm hole for the passage of the flue pipe, see fig 9. The hole should be drilled LEVEL to ensure any condense fluid that forms, is allowed to drain back to the appliance. The fixing holes for the wall mounting bracket should now be drilled and plugged, an appropriate type and quantity of fixing should be used to ensure that the bracket is mounted securely. Once the bracket has been secured to the wall, remove the blanking plate from the rear of the boiler (Fig. 15).

NOTE The inner 60mm pipe of the rear flue terminal mu**st be cut by 12mm at the point indicated (fig.13 pos. A).**

Attach the rear flue terminal to the appliance (using the previously retained screws) and fix the telescopic terminal to the correct length (wall thickness) ensuring that the terminal will protrude through the wall by the correct distance. At this point, lift the appliance and carefully insert the terminal into and through the wall, ensuring that the holes in the appliance back frame are aligned with the studs on the wall bracket.

Seal the top flue outlet of the boiler with the blanking plate provided with the rear flue kit (Fig. 14).

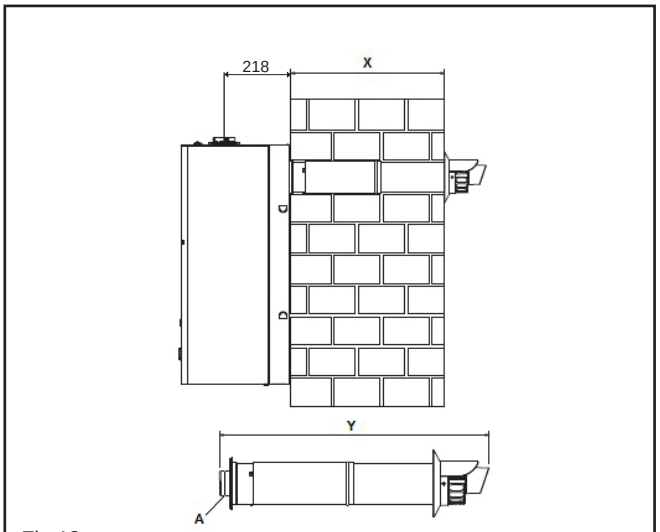

Fig.13

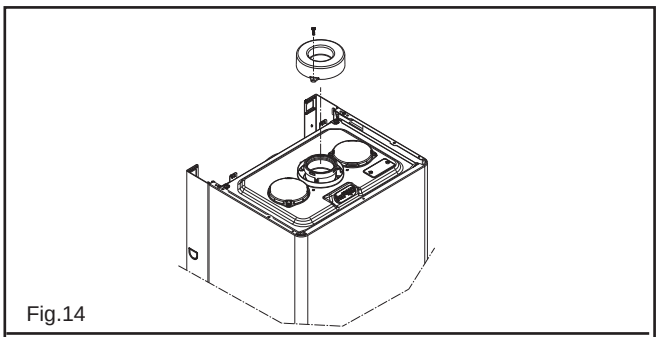
Fig.14

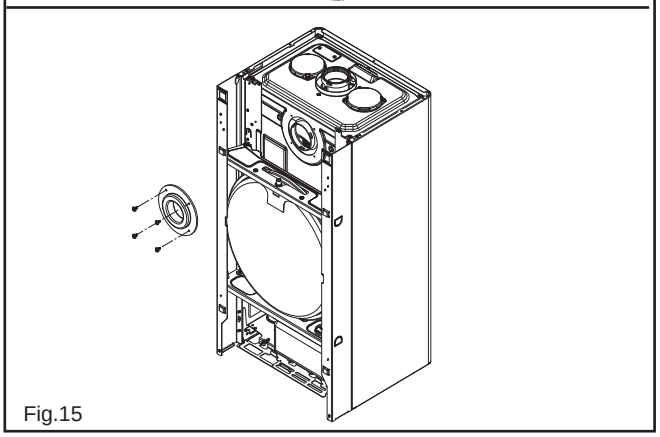
Fig.15

Using the screws and washers provided, secure the appliance onto the wall bracket and tighten with a suitable spanner.

Seal the flue assembly to the wall using cement or a suitable alternative that will provide satisfactory weatherproofing. The exterior wall trim can now be fitted.

Part No.	Description	Length
29450133	Rear flue terminal	825mm

4.5.2 CONCENTRIC VERTICAL FLUE

The appliance can be used with either the Vokèra condensing 60/100mm concentric flue system or the optional 80/125mm concentric flue system.

NOTE

These instructions relate **only** to the Vokèra condensing 60/100mm concentric flue system. For specific details on the installation of the 80/125mm concentric flue system please refer to the instructions supplied.

The vertical flue terminal can be connected directly to the appliance flue outlet. Alternatively, an extension or bend can be connected to the appliance flue outlet if desired, however if additional bends are fitted, a reduction must be made to the maximum flue length (see table below).

Reduction for bends

Bend	Reduction in maximum flue length for each bend
45º bend	1.0 metre (60/100) - 1.0 metre (80/125)
90º bend	1.0 metre (60/100) - 1.5 metre (80/125)

Vertical flue terminal and accessories

Part No.	Description	Length
29450122	Vertical flue terminal	1000 mm
531	Pitched roof flashing plate	N/A
532	Flat roof flashing plate	N/A
29450123	90-degree bend	N/A
29450124	45-degree bends (pair)	N/A
29450125	500mm extension	500 mm
29450126	1000mm extension	1000 mm
29450127	2000mm extension	2000 mm
29450128	Telescopic extension	372/519 mm
529	Wall bracket pack (5)	208mm

Using the dimensions given in fig.16 as a reference, mark and cut a 125mm hole in the ceiling and/or roof.

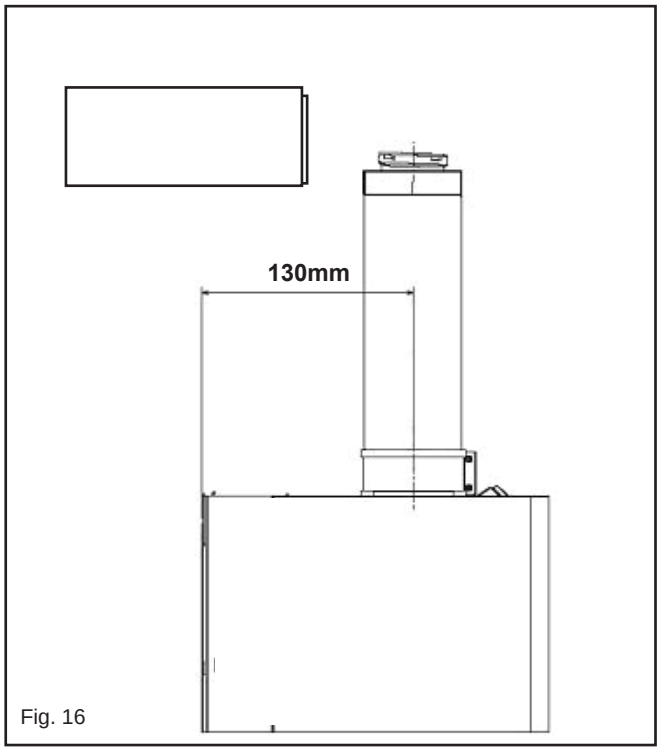

Fig. 16

Fit the appropriate flashing plate to the roof and insert the vertical flue terminal through the flashing plate from the outside, ensuring that the collar on the flue terminal fits over the flashing. The fixing holes for the wall-mounting bracket should now be drilled and plugged, an ‘appropriate type and quantity of fixing should be used to ensure that the bracket is mounted securely. Once the bracket has been secured to the wall, mount the appliance onto the bracket.

IMPORTANT

The vertical flue terminal is 1.0 metre in length and cannot be cut; therefore it may be necessary to adjust the height of the appliance to suit or use a suitable extension.

Connect the vertical flue assembly to the boiler flue spigot using the 100mm clip, gasket & screws (supplied), ensuring the correct seal is made. The flue support bracket (supplied with the vertical flue kit) can now be fitted.

If the vertical flue requires extension/s or additional bend/s, connect the required number of flue extensions or bends (up to the maximum equivalent flue length) between the boiler and vertical flue assembly.

Ensure that any horizontal sections of the flue system have a minimum 1º; maximum 3º fall back to the boiler (1º = 17mm per 1000mm).

NOTE

When cutting an extension to the required length, you must ensure that the excess is cut from the plain end of the extension. Remove any burrs, and check that any seals are located properly.

You must ensure that the entire flue system is properly supported and connected.

4.5.3 TWIN FLUE SYSTEM

The Vokèra twin flue system enables greater flue distances to be achieved than that of a concentric flue system. It can be used for horizontal or vertical applications, however the twin flue system must be converted to the dedicated concentric flue kit for termination. It is essential that the installation of the twin flue system be carried out in strict accordance with these instructions.

GUIDANCE NOTES ON TWIN FLUE INSTALLATION

- The flue must have a have a minimum 1º; maximum 3º (1º = 17mm per 1000mm) fall back to the appliance to allow any condensate that may form in the flue system to drain via the condensate drain. Consideration must also be given to the fact that there is the possibility of a small amount of condensate dripping from the terminal.
- Ensure that the entire flue system is adequately supported, use at least one bracket for each extension.
- As the exhaust outlet pipe can reach very high temperatures it must be protected to prevent persons touching the hot surface.
- The condensate drain pipe must be connected in accordance with building regulations

Reduction for bends

Bend	Reduction in maximum flue length for each bend
45º bend	1.0 metre
90º bend	1.5 metre

Twin flue accessories

Part No.	Description	Length
0225805	Horizontal flue terminal	1.0 metre
0225810	Vertical flue terminal	1.0 metre
359	Twin adapter kit	N/A
531	Pitched roof flashing plate	N/A
532	Flat roof flashing plate	N/A
0225815	Condensate drain kit	N/A
0225820	0.25m extension (pair)	250mm
0225825	0.5m extension (pair)	500mm
0225830	1.0m extension (pair)	1000mm
0225835	2.0m extension (pair)	2000mm
0225840	45º bend (pair)	N/A
0225845	90º bend (pair)	N/A
0225850	Twin bracket (5)	N/A
0225855	Single bracket (5)	N/A

MOUNTING THE BOILER

The fixing holes for the wall-mounting bracket should now be drilled and plugged, an appropriate type and quantity of fixing should be used to ensure that the bracket is mounted securely. Once the bracket has been secured to the wall, mount the appliance onto the bracket.

INSTALLATION OF TWIN ADAPTOR KIT (fig. 18 & 19)

- Insert the exhaust connection manifold (A) onto the appliance flue outlet.
- Remove the blanking plate (located to the left of the appliance flue outlet) and – using the same screws – install the air inlet plate (B).
- Using the hole in the exhaust connection manifold as a guide, drill a 3mm hole in the appliance flue spigot and secure the exhaust manifold connection to the flue spigot using the screw provided (C).
- Using the two holes in the air inlet plate as a guide, drill a 3mm hole in each and secure the air inlet pipe/bend using the screws provided.

The twin flue pipes extensions and accessories can now be installed by pushing together (the plain end of each extension or bend should be pushed approximately 50mm into the female socket of the previous piece).

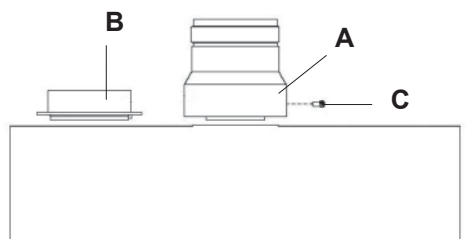

Fig.18

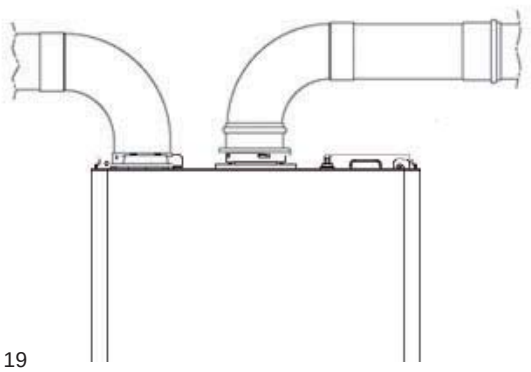
Fig. 19

HORIZONTAL TERMINATION (fig. 20)

The twin flue system must be converted to the dedicated concentric flue kit for termination.

- The horizontal terminal is supplied with a built-in converter box and cannot be shortened.
- A 130mm hole is required for the passage of the concentric terminal through the wall.
- The air inlet pipe must always be level with or below, that of the exhaust pipe.

Depending on site conditions it may be preferable to install the terminal assembly prior to fitting the twin flue pipes.

Mark and drill a level 130mm hole for the passage of the horizontal flue terminal. Insert the terminal assembly into the flue hole.
Push-fit the twin flue pipes onto the concentric to twin converter box ensuring that the exhaust pipe connects to the exhaust connection on the concentric to twin converter.
If necessary cut the plain ends (male) of the twin flue pipes to allow connection to the concentric to twin converter.

NOTE

Before cutting twin flue pipes ensure allowances have been made for connection onto the previous piece and onto the concentric to twin converter. The last twin flue pipes must be pushed 50mm onto the male spigots of the concentric to twin converter.

NOTE

Seal the flue terminal assembly to the wall using cement or a suitable alternative that will provide satisfactory weatherproofing. The interior and exterior trim can now be fitted.

VERTICAL TERMINATION (fig. 21)

The twin flue system must be converted to the dedicated concentric flue kit for termination.

- The vertical terminal is supplied with a built-in converter box and cannot be shortened.
- A 130mm hole is required for the passage of the concentric terminal through the ceiling and/or roof.

Depending on site conditions it may be preferable to install the terminal assembly prior to fitting the twin flue pipes.
Fit the appropriate flashing plate to the roof and insert the vertical flue terminal through the flashing plate from the outside, ensuring that the collar on the flue terminal fits over the flashing.
Push-fit the twin flue pipes onto the concentric to twin converter ensuring that the exhaust pipe connects to the exhaust connection on the concentric to twin converter.
If necessary cut the plain ends (male) of the twin flue pipes to allow connection to the concentric to twin converter.

NOTE

- Before cutting twin flue pipes ensure allowances have been made for connection onto the previous piece and onto the concentric to twin converter. The last twin flue pipes must be pushed 50mm onto the male spigots of the concentric to twin converter.
- You must ensure that the entire flue system is properly supported and connected.
- Ensure that any horizontal sections of pipe have a fall of between 1 & 3º towards the appliance (1º =17mm per 1000mm).

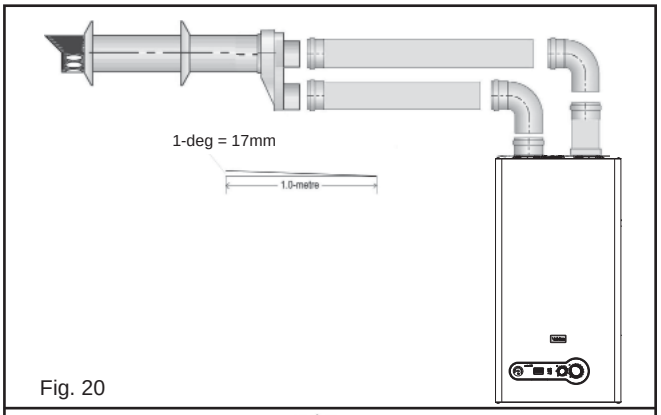

Fig. 20

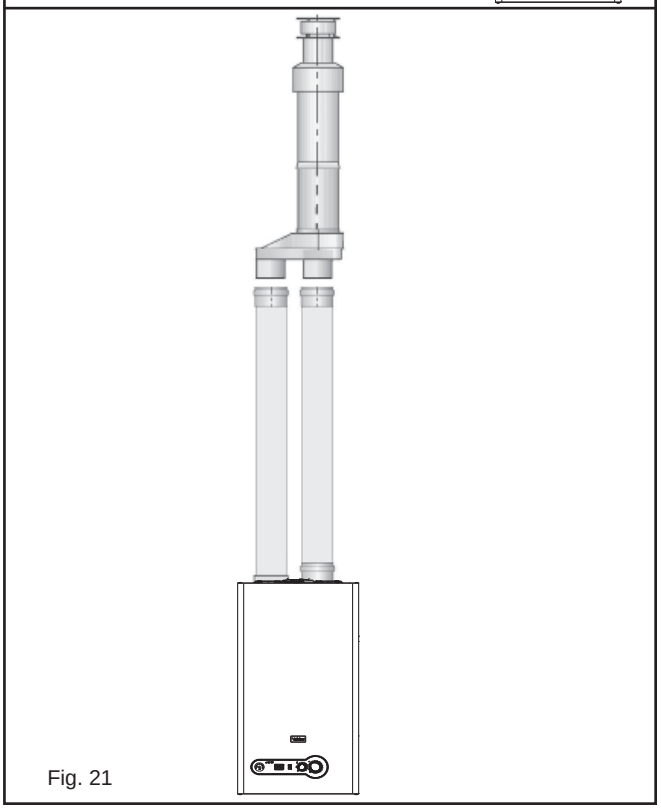
Fig. 21

4.6 CONNECTING THE GAS AND WATER

The appliance is supplied with an accessory pack that includes service valves, sealing washers' etc, for use with the service valves.

4.6.1 GAS (fig. 22)

The appliance is supplied with a 15mm service valve, connect a 15mm pipe to the inlet of the valve and tighten both nuts.

NOTE

It will be necessary to calculate the diameter of the gas supply pipe to ensure the appliance has an adequate supply of gas.

4.6.2 FLOW & RETURN (fig. 22)

The appliance is supplied with 22mm service valves for the flow and return connections, connect a 22mm pipe to the inlet of each valve and tighten both nuts.

NOTE

Depending on system requirements, it may necessary to increase the size of the flow & return pipe work after the service valve connections.

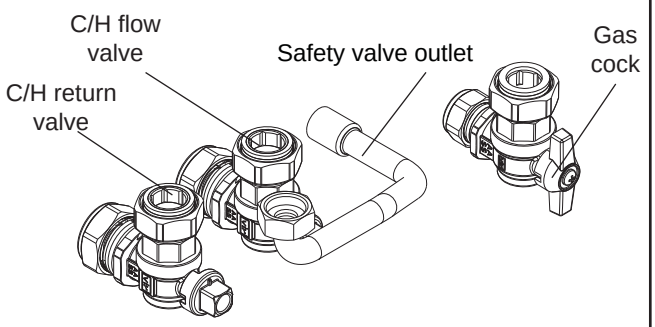

Fig. 22

4.6.3 SAFETY VALVE (fig. 22)

Connect the safety valve connection pipe to the safety valve outlet. Connect a discharge pipe to the other end of the safety valve connection pipe and tighten. The discharge pipe must have a continuous fall away from the appliance to outside and allow any water to drain away thereby eliminating the possibility of freezing. The discharge pipe must terminate in a position where any water – possibly boiling – discharges safely without causing damage or injury, but is still visible.

4.6.4 CONDENSE PIPE

During normal operation the boiler produces condense which is collected in a trap located in the lower part of the boiler. A flexible pipe (condense outlet pipe) is connected to the outlet of the trap. The flexible pipe must be connected to a plastic waste pipe only. The plastic waste pipe must have a minimum of a 3º fall towards the drain. Any external run of pipe should be insulated to prevent the risk of freezing.

4.6.5 CONNECTING THE CONDENSATE OUTLET

Gently pull the condense outlet pipe down from its location inside the boiler until approximately 100mm protrudes from the underside of the boiler, care should be taken to ensure that the pipe connection to the trap remains secure. Connect a suitable plastic (not copper) pipe (no less than 21mm diameter) to the outlet pipe and ensure it discharges in accordance with local building regulations or other rules in force.

4.7 ELECTRICAL CONNECTIONS

The boiler is supplied with a 2-metre fly-lead. This lead can be used for connection to the electrical supply. Connect the fly-lead to a fused plug or fused isolator in the following way:

- brown wire to LIVE supply
- blue wire to NEUTRAL supply
- green/yellow to EARTH connection.

Insert the supplied 3-AMP fuse into the fused isolator or fused plug.

Should the fly-lead be unsuitable, refer to 4.7.3 for details on how to connect the electrical supply directly to the boiler.

The electrical supply must be as specified in section 3/3A. A qualified electrician should connect the appliance to the electrical supply. If controls - external to the appliance - are required, a competent person must undertake the design of any external electrical circuits, please refer to section 8 for detailed instructions. ANY EXTERNAL CONTROL OR WIRING MUST BE SERVED FROM THE SAME ISOLATOR AS THAT OF THE APPLIANCE. The supply cable from the isolator to the appliance must be 3-core flexible sized 0.75mm to BS 6500 or equivalent. Wiring to the appliance must be rated for operation in contact with surfaces up to 90 ºC.

4.7.1 CASING REMOVAL (fig. 23)

To gain internal access to the appliance you must first remove the casing, proceed as outlined below:

- locate and unscrew the 2-screws (A) that secure the outer casing to the appliance
- lift the casing upward to disengage it from the top locating hooks and then remove
- store the casing and screws safely until required. Re-fit in the reverse order
- remove the retaining screw below the control fascia and gently lower it until it rests.

4.7.2 APPLIANCE TERMINAL BLOCK

The appliance terminal block is located on the rear of the control fascia. Remove the casing as described in 4.7.1. Gently pull the control panel forwards and down. Locate the terminal block cover (fig. 24).

NOTE

The appliance comes with a factory fitted link ('TA') to allow basic operation of the boiler via the mode selector switch. If it is anticipated that external controls will be required please refer to the wiring diagrams in section 8 for more detailed information.

4.7.3 CONNECTING THE MAINS (230V) INPUT

Unhook and remove the terminal block cover (230V). Pass the cable through the cable anchorage point. Connect the supply cable wires (LIVE, NEUTRAL, & EARTH) to their corresponding terminals (L, N, & E) on the appliance – high voltage – terminal block. When connecting the EARTH wire, ensure that it's left slightly longer that the others, this will prevent strain on the EARTH wire should the cable become taut.

The securing screw on the cable anchorage should now be tightened. This must be done before the terminal block cover is re-fitted in its position.

NOTE

It is the installer's responsibility to ensure that the appliance is properly Earthed. Vokèra Ltd. cannot be held responsible for any damages or injuries caused as a result of incorrect Earth wiring.

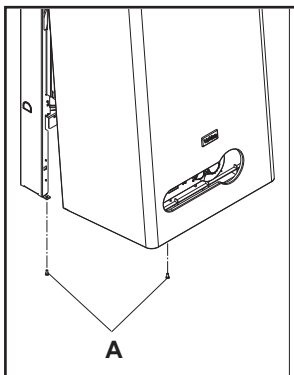

Fig. 23

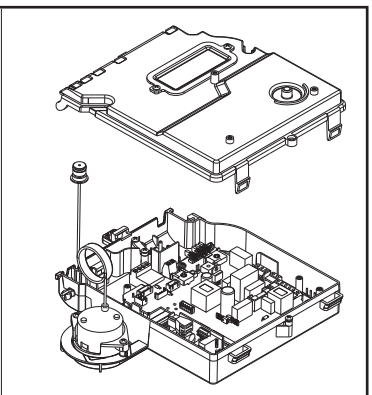

Fig. 24

SECTION 5 - COMMISSIONING

5.1 GAS SUPPLY INSTALLATION

Inspect the entire installation including the gas meter, test for tightness and purge. Refer to BS 6891 (I.S. 813 in ROI) for specific instruction.

5.2 THE HEATING SYSTEM

The appliance contains components that may become damaged or rendered inoperable by oils and/or debris that are residual from the installation of the system, consequently it is essential that the system be flushed in accordance with the following instructions.

5.3 INITIAL FILLING OF THE SYSTEM

Ensure both flow and return service valves are open, remove appliance casing as described in 4.7.1, identify the automatic air release valves (AAV) and loosen the dust cap/s by turning the cap anti-clockwise one full turn. Ensure all manual air release valves located on the heating system are closed. Connect the filling loop as shown in fig. 4, slowly proceed to fill the system by firstly opening the inlet valve connected to the flow pipe, and then turning the lever on the fill valve, to the open position. As water enters the system the pressure gauge will begin to rise. Once the gauge has reached 1 BAR close both valves and begin venting all manual air release valves, starting at the lowest first. It may be necessary to go back and top-up the pressure until the entire system has been filled. Inspect the system for water tightness, rectifying any leaks.

5.4 INITIAL FLUSHING OF THE SYSTEM

The whole of the heating system must be flushed both cold and hot as detailed in 5.8. Open all radiator or heating valves and the appliance flow & return service valve. Drain the boiler and system from the lowest points. Open the drain valve full bore to remove any installation debris from the boiler prior to lighting. Refill the boiler and heating system as described in 5.3.

5.5 PRE-OPERATION CHECKS

Before attempting the initial lighting of the appliance, the following checks must be carried out:

- ensure all gas service valves from the meter to the appliance are open and the supply pipe has been properly purged;
- ensure the proper electrical checks have been carried out, (see 7.8) particularly continuity, polarity and resistance to earth;
- ensure the 3 AMP fuse – supplied with the appliance – has been fitted;
- ensure the system has been filled, vented and the pressure set to 1 BAR;
- ensure the flue system has been fitted properly and in accordance with the instructions;
- ensure all appliance service valves are open.

5.6 INITIAL LIGHTING

Ensure the electrical supply to the appliance is switched on. Ensure any external controls are switched to an 'ON' position and are calling for heat. Move the selector switch to the ON position, the appliance will now operate as described in 1.2. Should the appliance fail to ignite, refer to 5.6 and/or section 7 (mode of operation, parameter setting & faultfinding).

5.7 CHECKING GAS PRESSURE AND COMBUSTION ANALYSIS

The appliance is factory set so should require no additional adjustment once installed. However to satisfy the requirements of GSIUR 26/9 (I.S. 813 ROI), it will be necessary to gas rate the appliance using the gas meter that serves the appliance and carry out a combustion analysis check in accordance with BS 7967 (UK) to ensure that correct combustion is occurring, see flow chart on page 36.
Additionally, if the gas valve has been adjusted, replaced, or the appliance has been converted for use with another gas type, then it becomes necessary to carry out a combustion analysis check to ensure that correct combustion is occurring. If there are no means to carry out a combustion analysis check, then it will not be possible to complete the commissioning procedure.
Details on how to carry out the combustion analysis can be found in section 7.

IMPORTANT
It's imperative that a sufficient dynamic – gas – pressure is maintained at all times. Should the dynamic gas pressure fall below an acceptable level, the appliance may malfunction or sustain damage.

5.8 FINAL FLUSHING OF THE HEATING SYSTEM

The system shall be flushed in accordance with BS 7593 (I.S. 813 ROI). Should a cleanser be used, it must be suitable for Aluminium heat exchangers. It shall be from a reputable manufacturer and shall be administered in strict accordance with the manufacturers' instructions and the DWTA code of practice.
NOTE
Chemicals used to cleanse the system and/or inhibit corrosion must be pH neutral, i.e. they should ensure that the level of the pH in the system water remains neutral. Premature failure of certain components can occur if the level of pH in the system water is out-with normal levels.

5.8.1 INHIBITORS

See Section 3 "General Requirements".

5.9 SETTING THE FLOW OUTLET TEMPERATURE

The flow outlet temperature can be adjusted between 40 °C - 80 °C for standard CH system by using the Heating thermostat knob (see fig.1).

5.10 SETTING THE SYSTEM DESIGN PRESSURE

The design pressure should be a minimum of 0.5 BAR and a maximum of 1.5 BAR. The actual reading should ideally be 1 BAR plus the equivalent height in metres (0.1 BAR = 1 metre) to the highest point in the system above the base of the appliance (up to the maximum of 1.5 BAR total).

N.B. The safety valve is set to lift at 3 BAR/30 metres/45 psig. To lower the system pressure to the required value, drain off some water from the appliance drain valve until the required figure registers on the pressure gauge (see fig. 1).

5.11 REGULATING THE CENTRAL HEATING SYSTEM

Fully open all radiator and circuit valves and run the appliance for both heating and hot water until heated water is circulating. If conditions are warm remove any thermostatic heads. Adjust radiator return valves and any branch circuit return valves until the individual return temperatures are correct and are approximately equal.

5.12 FINAL CHECKS

- ENSURE ALL TEST NIPPLES ON THE APPLIANCE GAS VALVE ARE TIGHT AND CHECKED FOR TIGHTNESS.
- ENSURE THE APPLIANCE FLUE SYSTEM IS FITTED CORRECTLY AND IS PROPERLY SECURED.
- ENSURE ALL PIPE WORK IS RE-CHECKED FOR TIGHTNESS.
- RE-FIT APPLIANCE CASING.
- COMPLETE BENCHMARK CHECKLIST.

FOR UK ONLY
Complete details of the boiler, controls, installation and commissioning in the Benchmark checklist at the back of this book. It is important that the Benchmark checklist is correctly completed and handed to the user. Failure to install and commission the appliance to the manufacturers instructions will invalidate the warranty.

5.13 INSTRUCTING THE USER

Hand over all documentation supplied with this appliance – including these instructions – and explain the importance of

keeping them in a safe place.
Explain to the user how to isolate the appliance from the gas, water and electricity supplies and the locations of all drain points. Show the user how to operate the appliance and any associated controls correctly.
Show the user the location of the filling valve and how to top-up the system pressure correctly and show the location of all manual air release points.
Explain to the user how to turn off the appliance for both long and short periods and advise on the necessary precautions to prevent frost damage.
Explain to the user that for continued safe and efficient operation, the appliance must be serviced annually by a competent person.

IMPORTANT
To validate the appliance warranty, it's necessary to register the appliance details with us. The warranty can be registered in several ways:

- by completing the warranty registration card and posting to us using the envelope supplied
- online at: vokera.co.uk
- for UK residents by calling: 0870 607 0281
- for ROI residents by calling: 056 6655057.

SECTION 6 - SERVICING INSTRUCTIONS

6.1 GENERAL

Once the appliance has been serviced, the benchmark Service Record must be completed.

For UK only: It is important that the Benchmark Service Record is correctly completed and handed to the user. Failure to install and commission the appliance to the manufacturers instructions will invalidate the warranty.

To ensure the continued safe and efficient operation of the appliance, it is recommended that it is checked and serviced at regular intervals. To ensure correct and safe operation of the appliance, it is essential that any worn or failed component be replaced only with a **genuine Vokèra spare part**. It should be remembered that although certain generic components may look similar, they will be specific to an individual appliance or product range. Use of non-genuine Vokèra spare parts could invalidate your warranty and may pose a potential safety hazard. The frequency of servicing will depend upon the particular installation conditions, but in general, once per year should be sufficient. It is the law that any servicing work is carried out by competent person such as a Vokèra engineer, an approved service agent, British Gas, GAS SAFE registered personnel or other suitably qualified personnel. The following instructions apply to the appliance and its controls, but it should be remembered that the central heating and the domestic hot water systems would also require attention from time to time.

6.2 ROUTINE ANNUAL SERVICING

- Check the operation of the appliance and ensure it functions as described in section 7.
- Compare the performance of the appliance with its design specification. The cause of any noticeable deterioration should be identified and rectified without delay.
- Thoroughly inspect the appliance for signs of damage or deterioration especially the flue system and the electrical apparatus.
- Check and adjust – if necessary – all burner pressure settings (see 7.4).
- Check and adjust – if necessary – the system design pressure (see 5.10).
- Carry out an analysis of the flue gases (see 7.3), and visually check the condition of the entire flue assembly.
- Compare the results with the appliance design specification. Any deterioration in performance must be identified and rectified without delay.
- Check that the main heat exchanger is clean and free from any debris or obstruction.
- Check and clean – if necessary – the condense trap to ensure correct operation.

The flame side of the burner is made of state-of-the-art material. Being fragile:

- be particularly careful when handling, mounting or dismantling the burner and adjacent components (e.g. electrodes, insulation panelling etc.)
- avoid direct contact with any cleaning appliance (e.g. brushes, aspirators, blowers, etc.).

This component does not need any maintenance, please do not remove it from its housing, except where the O-ring may have to be replaced.
The manufacturer declines all responsibility in cases of damages due to failing to observe the above.

6.3 REPLACEMENT OF COMPONENTS

Although it is anticipated that this appliance will give years of reliable, trouble free service, the life span of components will be determined by factors such as operating conditions and usage. Should the appliance develop a fault, the fault finding section will assist in determining which component is malfunctioning.

6.4 COMPONENT REMOVAL PROCEDURE

To remove a component, access to the interior of the appliance is essential. Isolate the appliance from the electrical supply and remove the fuse. And when necessary, close all service valves on the appliance, remove the appliance casing as described in section 4.7.1 and drain the water content from the appliance via the drain valve. Ensure some water absorbent cloths are available to catch any residual water that may drip from the appliance or removed component. Undertake a complete commissioning check as detailed in section 5, after replacing any component. **ALWAYS TEST FOR GAS TIGHTNESS IF ANY GAS CARRYING COMPONENTS HAVE BEEN REMOVED OR DISTURBED.**

6.4.1 AIR BOX FRONT COVER REMOVAL (fig. 25)

Locate the 4 screws and remove air box front cover.

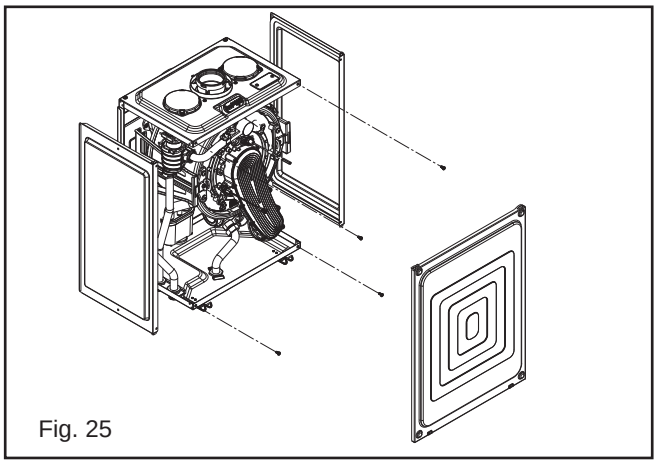

Fig. 25

6.5 PUMP ASSEMBLY (fig. 26)

Carry out component removal procedure as described in 6.4. Disconnect the flow pipe (B) from the combustion chamber connection, slacken the pipe (C) at the hydraulic assembly and swing/rotate clear of the pump assembly.
Remove the expansion pipe locking pin (D) from the top of the pump assembly and withdraw the flexible pipe. Locate and remove the pressure gauge securing pin (Dx) and disconnect the pressure gauge from the pump assembly. Disconnect the electrical wiring from the pump's electrical connection point (E). Locate and remove the 2 securing screws (A) at the rear of the pump assembly. Remove locking pin (F) from pump base and lift pump assembly clear of the hydraulic manifold. The pump assembly can now be removed from the appliance. Replace carefully in the reverse order.

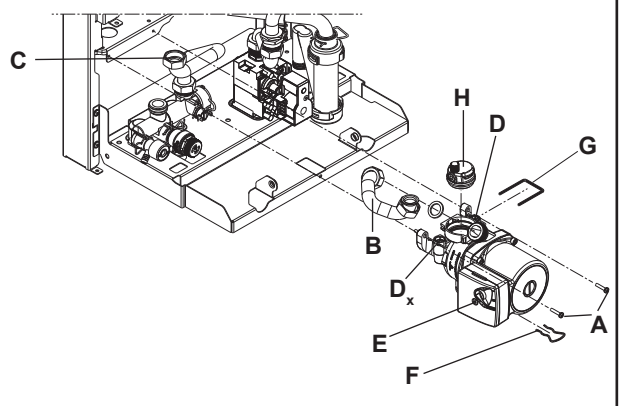

Fig. 26

6.6 SAFETY VALVE (fig. 27)

Carry out component removal procedure as described in 6.4. Disconnect the outlet pipe from the safety valve (**I**), remove safety valve locking pin **(L)** from the hydraulic manifold. Replace in the reverse order.

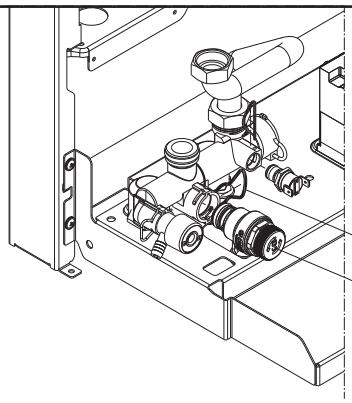

Fig. 27

6.7 LOWER AUTOMATIC AIR RELEASE VALVE (fig. 26)

Carry out component removal procedure as described in 6.4. Remove the expansion pipe locking pin **(D)** from the pump assembly and remove the expansion pipe. Locate and remove the AAV locking pin **(G)** from the pump assembly and remove the AAV assembly **(H)**. Replace in the reverse order.

6.7.1 TOP AUTOMATIC AIR RELEASE VALVE (fig. 28)

Carry out component removal procedure as described in 6.4. Unclip and remove the air chamber front cover. Remove the AAV locking pin (**M**) from the deaerator assembly and remove the AAV assembly (**N**). Replace in the reverse order.

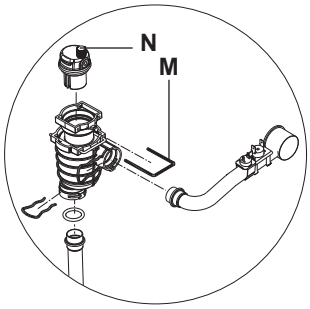

Fig. 28

6.8 WATER PRESSURE SWITCH (fig. 29)

Carry out component removal procedure as described in 6.4. Locate and remove the locking pin **(O)** from the water pressure switch. Remove the wiring. Carefully withdraw the switch. Replace in the reverse order.

6.9 FLOW THERMISTOR (fig. 3 - pos. 11)

Carry out component removal procedure as described in 6.4. Unclip and remove the air chamber front cover. Unclip the flow thermistor from the flow outlet pipe. Disconnect thermistor electrical plug. Replace in the reverse order.

6.10 RETURN THERMISTOR (fig. 3 - pos. 8)

Carry out component removal procedure as described in 6.4. Unclip the return thermistor from the return inlet pipe. Disconnect thermistor electrical plug. Replace in the reverse order.

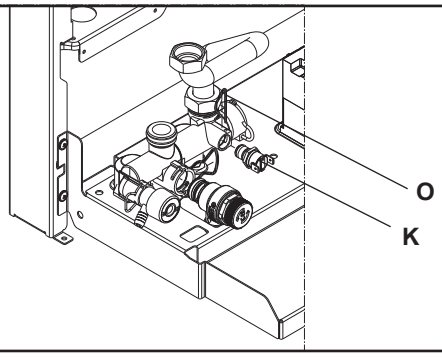

Fig. 29

6.11 PRINTED CIRCUIT BOARD (fig. 30)

Carry out component removal procedure as described in 6.4. Pull the control fascia forward and lower it. Push the clips (**P**) which secure the PCB cover, remove cover, after carefully taking note of all wiring connections and jumper tag configuration. Unhook and remove connection block (**Q**). Disconnect all wiring from the PCB, locate and remove the PCB securing screws, remove the required PCB. Replace in the reverse order ensuring that the position of the 2 control knobs are correctly aligned with the respective potentiometers on the PCB.
Ensure that the correct jumper tag configuration has been respected. It will be necessary to check the functioning of the PCB is set for the correct boiler type/application.

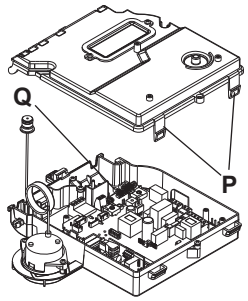

Fig. 30

6.12 GAS VALVE (fig. 31)

Carry out component removal procedure as described in 6.4. The gas valve must be changed as complete unit. Disconnect the electrical plug and leads from the gas valve, slacken and unscrew gas valve inlet and outlet connections. **Please note,** the sealing washers (**R**) must be discarded and replaced with new sealing washers. Disconnect the compensation pipe (**S**). Locate and remove gas valve retaining screws **(T)** on the underside of the boiler if required, the gas valve can now be removed. Replace in the reverse order. Check and adjust burner pressure settings.

WARNING, A GAS TIGHTNESS CHECK MUST BE CARRIED OUT.

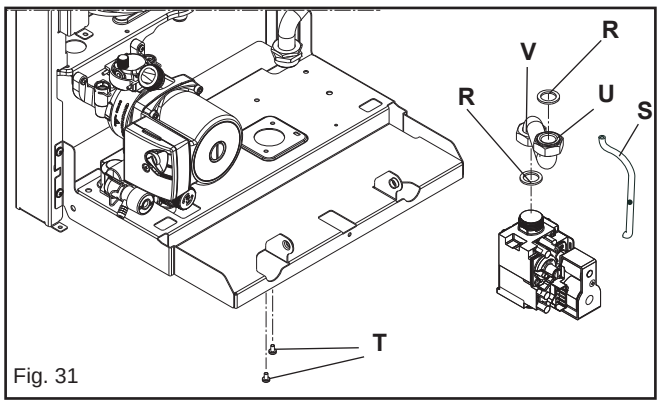

Fig. 31

6.12.1 INJECTOR

Carry out component removal procedure as described in 6.4

- Remove the mixer as described in 6.14.
- unscrew the screws fixing the plastic Venturi to the aluminium shell
- Loosen the plastic Venturi (**B1**) by levering from under the teeth (be careful not to force them) and press from the opposite side until it is completely extracted from the aluminium shell.
- Using a CH6 wrench remove and don't use again the 2 nozzles (see details in figure)
- Clean plastic traces
- Press in the 2 new nozzles from the kit as far as the threaded part, then screw in tightly
- Reassemble the mixer with the flap in an horizontal position
- Replace in the reverse order.
- Check the number of fan speed

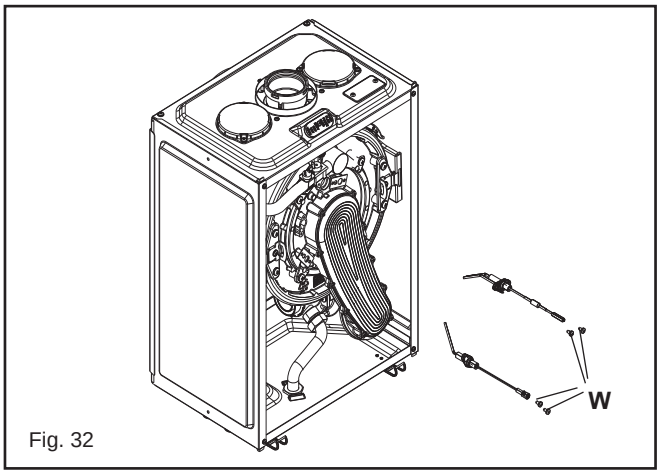

Fig. 32

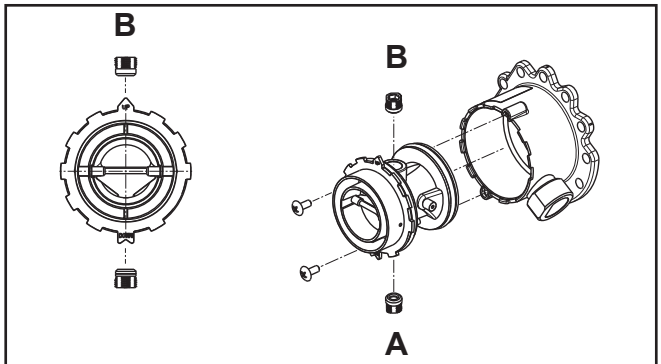

	INJECTOR	G20	G31
Mynute *i20*	A	4.7 flap side	3.4 flap side
	B	4.2 free side	3.25 free side
Mynute *i30*	A	5.1 flap side	3.55 flap side
	B	4.7 free side	3.55 free side

Fig. 33

6.13 ELECTRODES & CONDENSE SENSOR (fig. 32)

Carry out component removal procedure as described in 6.4. Unclip and remove the air chamber front and RH side covers. Disconnect the electrode leads and ancillary wiring from their respective connectors. Remove the retaining screws (W) for electrode and remove.

6.14 FLUE FAN & MIXER (fig. 34)

Carry out component removal procedure as described in 6.4. Unclip and remove the air chamber front and the RH side covers. Slacken the gas pipe **(A1)** at the air box connection and swing/rotate away from the fan assembly. Locate and remove the sense electrode. To remove the mixer **(B1)** locate and remove the three screws **(C1)**. To remove the fan **(D1)**, disconnect the electrical connections attached to the fan, locate and remove the four screws **(E1)**. Gently ease the fan from its location. Replace in the reverse order. Ensure all seals are in good condition, taking care to ensure they are replaced correctly.

6.15 BURNER (fig. 34)

Carry out component removal procedure as described in 6.4. Unclip and remove the air chamber front and the RH side covers. Slacken the gas pipe (**A1**) at the air box connection and swing/rotate of the fan assembly. Locate and remove the 3 internal nuts (**F1**) which secure the fan assembly in position to the heat exchanger (**G1**). Disconnect the electrode leads and ancillary wiring from their respective connectors. Remove the retaining screws (fig. 36) for sensing electrode and remove. Gently ease the fan assembly out of its location.

Ensure the seal is in good condition, taking care to ensure it is replaced correctly.

Replace in the reverse order.

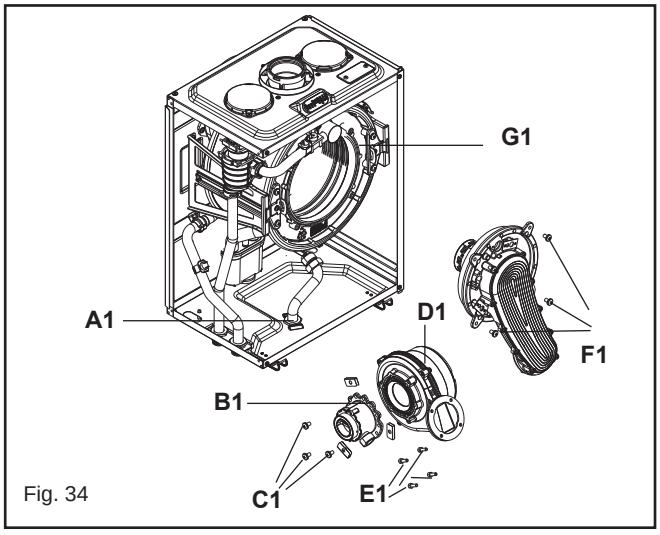

Fig. 34

6.16 MAIN HEAT EXCHANGER (fig. 35)

Carry out component removal procedure as described in 6.4. Unclip and remove the three air chamber covers (front, LH, RH sides). Disconnect all the wiring connections. Fig. 36: Slacken the gas pipe (**L1**) at the air box connection and swing/rotate of the fan assembly. Disconnect the flow (**M1**), return (**N1**) and condense connections on the heat exchanger. Remove fan and mixer as described in 6.14. Locate and remove the 2-screws that secure the heat exchanger retaining clips and remove clips (**O1**). Pull the heat exchanger forward and disconnect it from the flue collector (**P1**). The heat exchanger can now be withdrawn from the appliance.
Replace in the reverse order. Ensure all seals are in good condition, taking care to ensure they are replaced correctly.

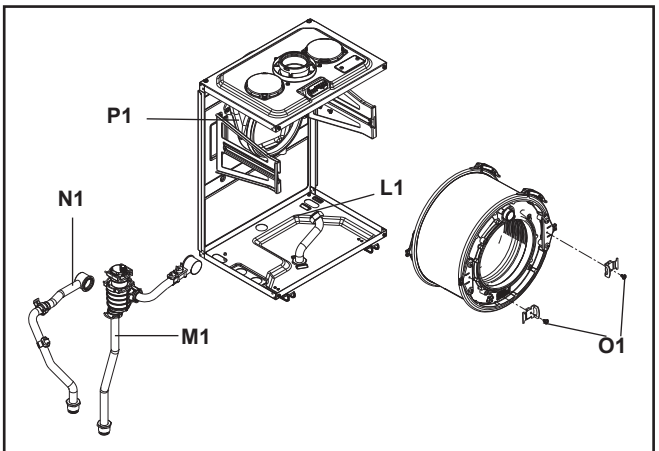

Fig. 35

6.17 AUTOMATIC BY-PAS (fig. 36)

Carry out component removal procedure as described in 6.4. Remove the locking pin (**Q1**) that secures the cover (**R1**) to the hydraulic manifold. Using a hooked piece of wire, carefully withdraw the by-pass cartridge (**S1**). Ensure all seals are in good condition, taking care to ensure they are replaced correctly. Replace in the reverse order ensuring the cartridge is facing the correct way.

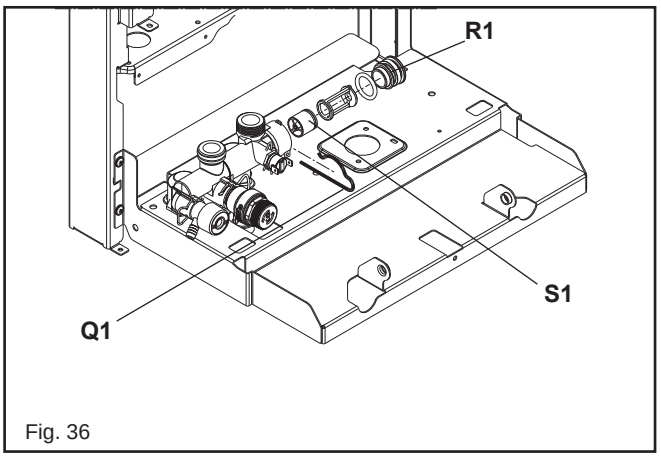

Fig. 36

6.18 EXPANSION VESSEL

Should the removal and replacement of the expansion vessel be deemed impractical, an external expansion vessel may be fitted to the return pipe as close to the appliance as possible.

6.18.1 EXPANSION VESSEL REMOVAL (with sufficient clearance above, fig. 37)

Carry out component removal procedure as described in 6.4. Disconnect the flue from the appliance. Disconnect the expansion vessel from the flexible expansion pipe. Disconnect the flexible expansion pipe from the vessel. Unscrew the nut that secures the vessel to the lower frame. Locate and remove the 6 screws **(U1)** that secure the vessel top holding plate **(V1)**, remove the plate. The expansion vessel can now be removed. Replace in the reverse order. Ensure all seals are in good condition, taking care to ensure they are replaced correctly.

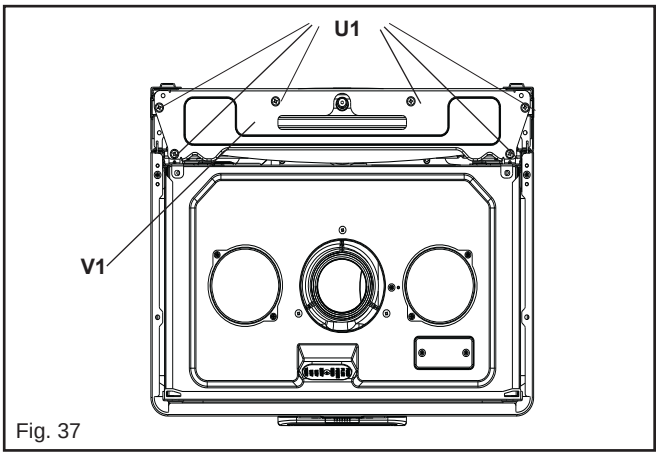

Fig. 37

6.19 CONDENSE TRAP REMOVAL (fig. 38)

Carry out component removal procedure as described in 6.4. Disconnect the 2 upper rubbers condense pipe **(W1)**. Remove the pin **(X1)** that secures the trap to the air box plate. Disconnect the lower rubber condense pipe from the condense trap. Carefully remove the condense trap. Remove the 2 screws **(Y1) and clean the condense trap.**
Replace the component taking care the longer pipe on the cover is positioned on the right side.
Disconnect the the locking pin (**Z1**) that secures the trap to the air condense pipe. Disconnect the lower rubber condense pipe from the condense trap. Carefully remove the condense trap. For cleaning unlock the upper and lower closing plug (**J1**). Replace in the reverse order.

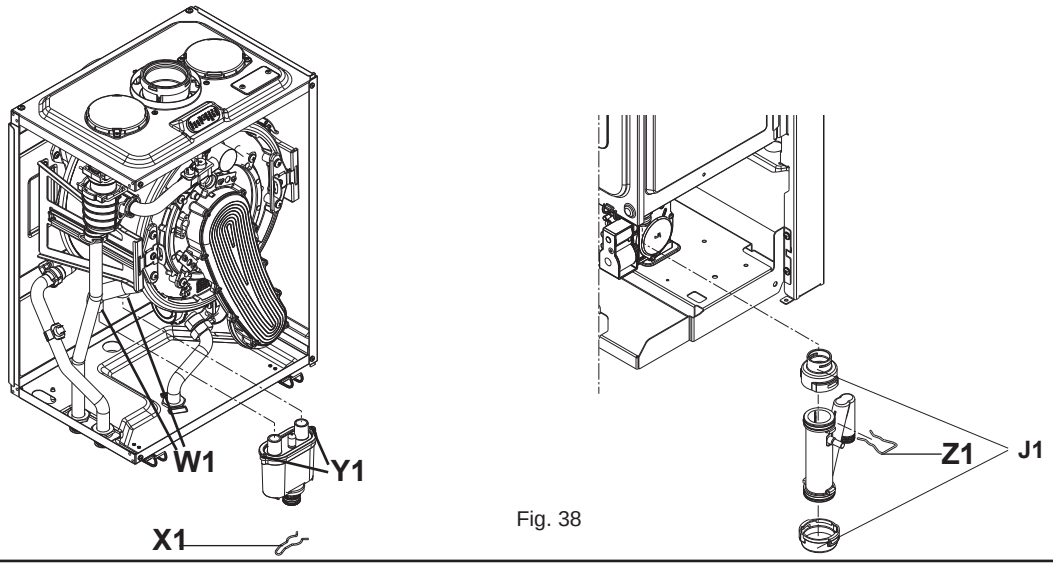

Fig. 38

6.20 FLUE COLLECTOR REMOVAL (fig. 39)

Carry out component removal procedure as described in 6.16. Locate and remove the screw (**A2**) that secures the flue gas analysis test point cover (**B2**). Remove the clip and the fumes thermostat (**C2**). Locate and remove the screws (**D2**) that secure the flue collector to the combustion chamber Gently pull forward and ease the flue collector from its location. Replace in the reverse order.

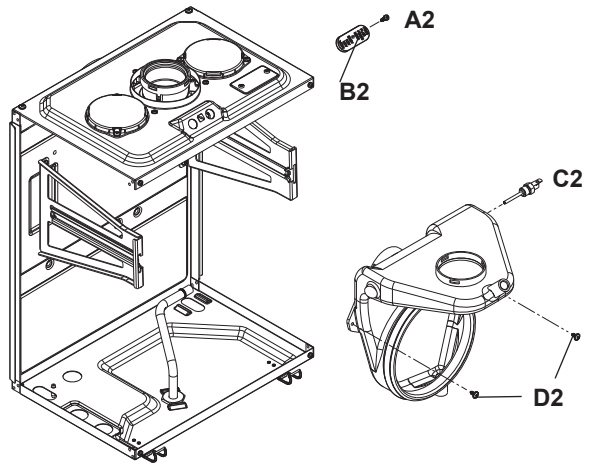

Fig. 39

SECTION 7 - CHECKS, ADJUSTMENTS AND FAULT FINDING

7.1 CHECKING APPLIANCE OPERATION

When carrying out any repairs or servicing to the appliance, the relevant commissioning procedure must be undertaken to ensure the continued safe operation of the appliance. Particular attention should be made to ensure gas tightness, water tightness and the electrical integrity of the appliance.

7.2 APPLIANCE MODES OF OPERATION

NOTE

There must be sufficient system water pressure (min. 0.5 bar) to ensure the water pressure switch is activated. If there is insufficient system pressure the pump and fan will be prevented from operating and the low-pressure fault code will be indicated.

7.2.1 SELECTOR SWITCH IN THE OFF POSITION

When the selector switch is in the OFF position, the following functions are active.

Active functions:

- frost-protection system
- pump anti-block.

7.2.2 ON-BOARD FUNCTIONS

- **CO FUNCTION:** the CO function when activated, will allow the appliance to run at CH maximum, whilst a combustion analysis check or a mechanical gas valve calibration is being carried out. Whilst the CO function is active, all other functions are disabled (minimum power operating period, anti-cycle, set-point, etc). Once enabled, the CO function will remain active for a 15-minute period, or until the function is manually deactivated.
- **FROST-PROTECTION:** this function is only active when there are no requests for heating or HW. If the temperature drops below 5°C, the boiler will operate on minimum power until the temperature of the thermistors reaches 35°C . Thereafter the pump & fan will over-run for 30-seconds.
- **ANTI-CYCLE FUNCTION:** the anti-cycle function ensures the burner remains switched off for at least 3-minutes after the set-point hysterisis (set-point + 5-deg) for CH heat request.
- **PUMP ANTI-BLOCK FUNCTION:** when there has been no heating or HW request for 24-hours, the anti-block cycle is activated. The pump will be activated for a period of 30-seconds.
- **SARA function:** the SARA function permits the boiler (when the set-point is within the SARA range) to automatically adjust (raise) the heating flow outlet temperature should the room thermostat contacts remain closed for more that 20-minutes.

7.2.3 HEATING MODE

With the selector switch in the heating & hot water position and any additional controls (time clock, programmer, room thermostat, etc.) calling for heat, the appliance will operate in the heating mode. The pump and fan will be activated via the flow temperature sensor. When the fan is sensed to be operating correctly (tacho signal), the ignition sequence commences. Ignition is sensed by the electronic circuit to ensure flame stability at the burner. Once successful ignition has been achieved, the electronic circuitry increases the gas rate to 75% for a period of 15 minutes.

The speed of the fan and therefore the output of the boiler is determined by the temperature of the water sensed by the flow temperature sensor, consequently a high temperature at the flow sensor results in a lower fan speed. As the water temperature increases, the temperature sensors – located on the flow pipe of the boiler – reduce the fan speed via the electronic circuitry. Depending on the load, either the water temperature will continue to rise until the set point is achieved or the water temperature will fall whereby fan speed will increase relative to the output required. When the boiler has reached the set point (+ hysterisis), the burner will switch off. The built-in anti-cycle device prevents the burner from re-lighting for approximately 3-minutes. When the temperature of the flow sensor falls below the set point (- hysterisis), the burner will re-light.

NOTE

If the spark/sensing electrode does not sense ignition the appliance will re-attempt ignition a further 4-times then go to lockout. When the set-point has been reached (the position of the heating temperature selector) as measured at the primary thermistor, the appliance will begin the modulation phase whereby the fan and gas valve will continuously modulate to maintain the set-point. If the temperature continues to rise and exceeds the set-point by 5°C (hysterisis), the burner will shut down. A new ignition sequence will be enabled when the 3- minute anti-cycle has been performed and the temperature at the primary thermistor has dropped 5°C (hysterisis) below the set-point.

ATTENTION

Gas type and appliance output **must be set** according to the specific appliance specification. Vokèra accepts no responsibility if the gas type is not correctly adjusted according to the respective appliance specification as detailed on the appliance data badge.

7.3 CHECKING THE CO_2 AND ADJUSTING THE GAS VALVE

THE GAS VALVE MUST BE SET-UP OR ADJUSTED WITH THE AID OF A PROPERLY CALIBRATED FLUE GAS ANALYSER.

Isolate the appliance from the electrical supply and remove the appliance casing as described in 4.7.1, to gain access to the printed circuit board, locate and open the closing plug on the dash board (L2), Restore the electrical supply to the boiler and switch the boiler to the OFF mode. locate and press the CO button (see fig. 40 pos. SW1). Press the button the number of times according the function requirement as par 7.3.1.

Set the flue gas analyser to read CO2 and insert the probe into the flue analysis test point.

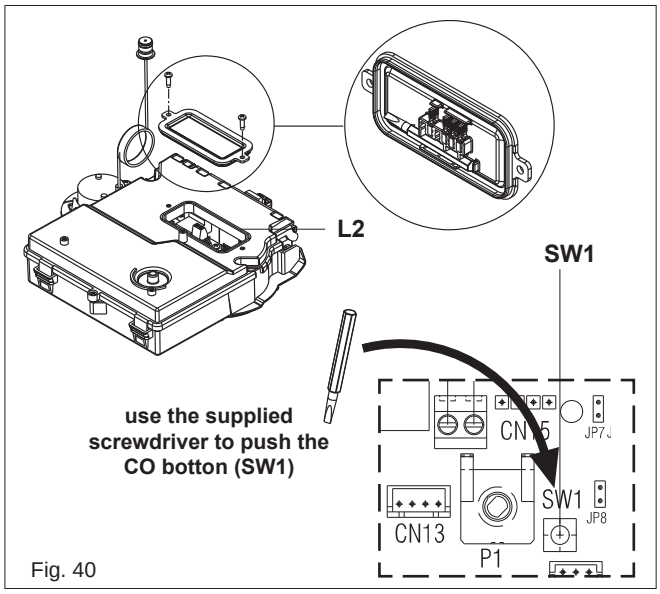

Fig. 40

7.3.1 CO_2 FUNCTION SETTINGS

Locate the CO button (see 7.3)

Select the main selector switch in position ⏻

CO_2 FUNCTIONS	ACTION ON THE BUTTON	LED STATUS
combustion analysis mode	press once = burner running at maximum heating	ACO
gas valve maximun setting (*)	press twice = burner running at maximum absolute	ACO
gas valve minimum setting	press three time = burner running at minimum	ACO

(*) this step has not to be used for the system boiler. If you find in this situation press the button once again.

NOTE

1 - Any additional pressing of CO button after the third time the burner switched between maximum absolute and minimum.

2 - To restart the CO function it is necessary to pass throught the ⏻ position with the main selector switch

7.3.2 GAS VALVE MAXIMUM SETTING

Set the CO_2 button at maximum heating (see 7.3.1), once the maximum heating is obtained (only yellow led blinking) check that it corresponds with the appropriate CO_2 value (Maximum) for the respective appliance (see 2.11). If the CO_2 reading is correct, proceed to gas valve minimum setting (7.3.3).

However, if the CO_2 reading is incorrect, the maximum gas pressure must be adjusted as follows:

- using a 2.5mm Allen key, very slowly turn the maximum adjustment screw (see fig. 41) – clockwise to decrease, counter clockwise to increase – until the correct value is displayed on the CO_2 analyser (allow time for the analyser to stabilise).

7.3.3 GAS VALVE MINIMUM SETTING

Set the CO2 button at minimum (see 7.3.1), once the minimum is obtained (yellow led blinking + green led fixed) check that it corresponds with the appropriate CO2 value (Minimum) for the respective appliance (see 2.11). If the CO2 reading is correct, proceed to completion (7.3.4).

However, if the CO2 reading is incorrect, the minimum gas pressure must be adjusted as follows:

- locate the minimum adjustment screw (fig. 41), using a suitable screwdriver remove the protection plug
- using a 4mm Allen key, very slowly turn the minimum adjustment screw (see fig. 41) - clockwise to increase, counter clockwise to decrease - until the correct value is displayed on the CO2 analyser (allow time for the analyser to stabilise).

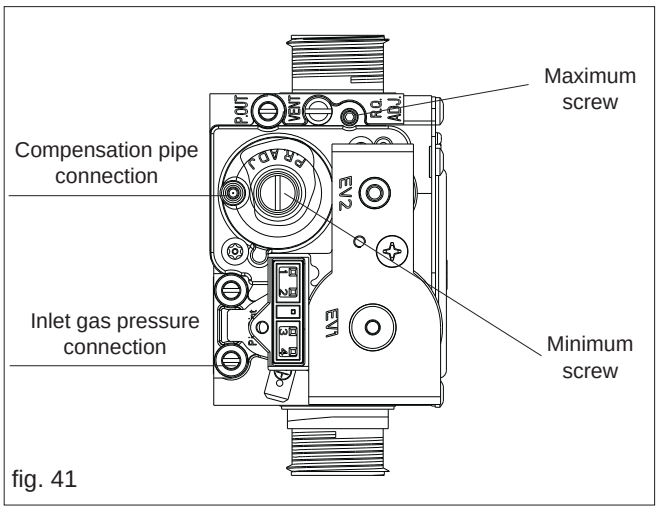

fig. 41

7.3.4 COMPLETION

On completion of the combustion analysis check and/or any gas valve adjustment, refit the plug (fig. 40 **L2**) and move the mode selector through ⏻ position. Remove the test probe from the test point and refit the sealing screw/s and/or cap.

IMPORTANT

A GAS TIGHTNESS CHECK MUST BE CARRIED OUT IF ANY GAS CARRYING COMPONENTS HAVE BEEN REMOVED, REPLACED OR DISTURBED.

7.4 COMBUSTION ANALYSIS TEST

A combustion analysis check can easily be carried out on the appliance via the test points located on the top of the appliance (see 7.3).

- Insert the flue gas analyser probe into the flue gas test point
- Operate the boiler in combustion analysis mode (see 7.3.1) and compare the values with those shown in section 2 (Nat. Gas) or section 10 (LPG). If different adjust the gas valve according to 7.3.1, 7.3.2, & 7.3.3.

Note: If a measured CO/CO2 ratio of 0.004/1 or less AND a CO reading of less than 350ppm cannot be achieved, please contact Vokera technical for advice.

7.5 CHECKING THE EXPANSION VESSEL

Carry out the component removal procedure as described in 6.4. You must ensure that the boiler is completely drained of water. Using a suitable pressure gauge, remove dust cap on expansion vessel and check the charge pressure. The correct charge pressure should be 1.0 bar ± 0.1 bar. If the charge pressure is less, use a suitable pump to increase the charge.

NOTE

You must ensure the drain valve is in the open position whilst re-charging takes place. Replace the dust cap and carry out the relevant commissioning procedure (section 5).

7.6 EXTERNAL FAULTS

Before carrying out any faultfinding or component replacement, ensure the fault is not attributable to any aspect of the installation.

7.6.1 INSTALLATION FAULTS

Symptom	Possible cause
No ignition	Check wiring/check electrical supply
No hot water	Check external controls
No heating	Check external controls

Fault	Possible cause
Fault code	Check gas supply, check flue system, check polarity

7.7 ELECTRICAL CHECKS

Any electrical checks must be carried out by a suitably qualified person.

7.7.1 EARTH CONTINUITY TEST

Isolate the appliance from the electrical supply, and using a suitable multi-meter carry out a resistance test. Connect test leads between an appliance earth point and the earth wire of the appliance supply cable. The resistance should be less than 1 OHM. If the resistance is greater than 1 OHM check all earth wires and connectors for continuity and integrity.

7.7.2 SHORT CIRCUIT CHECK

Isolate the appliance from the electrical supply, and using a suitable multi-meter, carry out a short circuit test between the Live & Neutral connections at the appliance terminal strip. Repeat above test on the Live & Earth connections at the appliance terminal strip.

NOTE

Should it be found that the fuse has failed but no fault is indicated, a detailed continuity check will be required to trace the fault. A visual inspection of components may also assist in locating the fault.

7.7.3 POLARITY CHECK

With the appliance connected to the electrical supply and using a suitable multimeter, carry out the following voltage tests:

- connect test leads between the Live & Neutral connections at the appliance terminal strip. The meter should read approximately 230V ac. If so proceed to next stage. If not, see 7.7.4.
- connect test leads between the Live & Earth connections at the appliance terminal strip. The meter should read approximately 230V ac. If so proceed to next stage. If not, see 7.7.4.
- connect test leads between the Neutral & Earth connections at the appliance terminal strip. The meter should read approximately 0 – 15Vac. If so polarity is correct. If not, see 7.7.4.

7.7.4 REVERSED POLARITY OR SUPPLY FAULT

Repeat the above tests at the appliance isolator, if testing reveals correct polarity and/or supply at the isolator, re-check wiring and connections between the isolator and the appliance. If tests on the isolator also reveal reversed polarity or a supply fault, consult the local electricity supplier for advice.

7.7.5 RESISTANCE TO EARTH CHECK

Isolate the appliance from the electrical supply, and using a suitable multi-meter carry out a resistance test. Connect test leads between the Live & Earth connections at the appliance terminal strip. If the meter reads other than infinity there is a fault that must be isolated, carry out a detailed continuity check to identify the location of the fault.

These series of checks must be carried out before attempting any faultfinding procedures on the appliance. On completion of any task that required the disconnection and re-connection of any electrical wiring or component, these checks must be repeated.

7.8 FAULT FINDING

Before attempting any faultfinding, the electrical checks as detailed in 7.7 must be carried out. Isolate the appliance from the electrical supply.

Disconnect any external controls from terminal plug (CN5 fig. 44), and insert a link-wire between the two wires at the 'TA' connections.

NOTE

Restore the electrical supply to the boiler and turn the selector switch to the on position. The boiler should now function as described in section 7. Should the boiler fail to respond, the internal fuses and connectors should be checked to ensure integrity and continuity.

7.9 COMPONENT VALUES & CHARACTERISTICS

COMPONENT	VALUE
Fan	230Vac
Pump	230Vac
Ignition transformer	230Vac
Gas valve	230Vac
Room thermostat connection	24Vdc
Y and S plan input connection (CN1)	230Vac
NTC thermistor (dry contact)	10Kohm
NTC thermistor (wet contact)	10Kohm
FUNCTION	**VALUE**
Standard Heating temperature range (min – max °C)	40 - 80
75% maximum CH time	15 min
Heating OFF hysterisis (°C)	SP + 5
Heating ON hysterisis (°C)	SP – 5
Anti-cycle delay	3-min
Pump over-run	30-sec
Low output (min. output + %)	Min+25
CO function max temp. (°C)	90
CO re-light temp. (°C)	78
CO function time	15-min
Flow NTC max temp. (°C)	90
High limit thermostat (°C)	105
Flue NTC max temp. (°C)	125
Maximum differential (°C)	35
IGNITION CONTROL	**VALUE**
Ignition attempts before L/O (lockout)	5
Re-ignition attempts after loss of flame signal	5

APPLIANCE STATUS LED AND FAULT CODES

When the boiler detects a temporary fault condition, the appropriate code is shown. If/when the fault is final, the pump will perform a 60-second post circulation and fault code will be displayed. See table on page. 5.

7.10 ADJUSTMENTS

The boiler has already been adjusted by the manufacturer during production. If the adjustments need to be made again, for example after extraordinary maintenance, replacement of the gas valve, or conversion from methane gas to LPG, observe the following procedures.

The adjustment of the maximum and minimum output, and of the maximum and minimum heating and of slow switch-on, must be made strictly in the sequence indicated, and only by qualified personnel only:

- disconnect the boiler from the power supply
- turn the heating water temperature selector to its maximum
- loosen the fixing screws (E) on the instrument panel
- lift then turn the instrument panel towards you
- loosen the fixing screws on the cover (F) to access the terminal board
- insert the jumpers JP1 and JP3
- power up the boiler

The display shows “ADJ” for approximately 4 seconds

Next change the following parameters:

1 - Domestic hot water/absolute maximum
2 - Minimum
3 - Heating maximum
4 - Soft light fan speed

as follows:

- turn the heating water temperature selector to set the required value
- press the CO button and then skip to the calibration of the next parameter.

⚠ **Live electrical parts (230 V AC).**

The following icons light up on the monitor:

1. during domestic hot water/absolute maximum calibration
2. during minimum calibration
3. during heating maximum calibration
4. P during soft light fan speed calibration

End the procedure by removing jumpers JP1 and JP3 to store these set values in the memory.

THE function can be ended at any time without storing the set values in the memory and retaining the original values as follows:

- remove jumpers JP1 and JP3 before all 4 parameters have been set
- set the function selector to ⏻ (OFF/RESET)
- cut the power supply
- waiting for 15 minutes after it is connected.

⚠ Calibration can be carried out without switch on the boiler.

⚠ By turning the heating selection knob, the monitor automatically shows the number of rotations, expressed in hundreds (e.g. 25 = 2,500 rpm).

GAS VALVE CALIBRATION

- Connect the boiler to the power supply
- Open the gas tap
- Set the function selector to ⏻ (OFF/RESET) (monitor off)
- Remove the screws (E), remove the casing, remove the retaining screw below the control fascia then lower the fascia towards you (fig. 24)
- Loosen the fixing screws on the cover (F) to access the terminal board
- Press the CO button

⚠ **Live electrical parts (230 V AC).**

- Wait for burner ignition.
  The display shows “ACO”. The boiler operates at maximum heat output.
  The “combustion analysis” function remains active for a limited time (15 min); if a delivery temperature of 90°C is reached, the burner is switched off. It will be switched back on when this temperature drops below 78°C.
- Insert the analyser probe in the ports provided in the air distribution box, after removing the screws from the cover
- Press the “combustion analysis” button a second time to reach the number of rotations corresponding to the maximum domestic hot water output (table 1)
- Check the CO2 value: (table 4) if the value does not match the value given in the table, use the gas valve maximum adjustment screw
- Press the “combustion analysis” button a third time to reach the number of rotations corresponding to the minimum output (table 2)
- Check the CO2 value: (table 5) if the value does not match the value given in the table, use the gas valve minimum adjustment screw
- To exit the “combustion analysis” function, turn the control knob
- Remove the flue gas probe and refit the plug
- Close the instrument panel and refit the housing.

The “combustion analysis” function is automatically deactivated if the board triggers an alarm. In the event of a fault during the combustion analysis cycle, carry out the reset procedure.

table 1

MAXIMUM NUMBER OF FAN ROTATIONS	METHANE GAS (G20)	LIQUID GAS (G31)	
Mynute *i20*	45	45	rpm
Mynute *i30*	52	50	rpm

table 2

MINIMUM NUMBER OF FAN ROTATIONS	METHANE GAS (G20)	LIQUID GAS (G31)	
Mynute *i20*	12	15	rpm
Mynute *i30*	12	15	rpm

table 3

SOFT LIGHT FAN SPEED	METHANE GAS (G20)	LIQUID GAS (G31)	
Mynute *i20* - Mynute *i30*	33	33	rpm

table 4

Max. CO_2	METHANE GAS (G20)	LIQUID GAS (G31)	
Mynute *i20* - Mynute *i30*	9.0	10.0	%

table 5

Min. CO_2	METHANE GAS (G20)	LIQUID GAS (G31)	
Mynute *i20* - Mynute *i30*	9.0	10.0	%

The boiler is supplied with the adjustments shown in the table. Depending on plant engineering requirements or regional flue gas emission limits it is, however, possible to modify this value, referring to the graphs below.

Mynute *i20*

HTG curve (Qnheating)

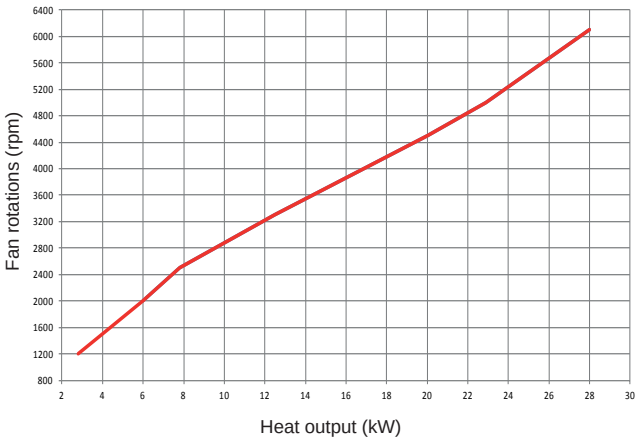

Mynute *i30*

HTG curve (Qnheating)

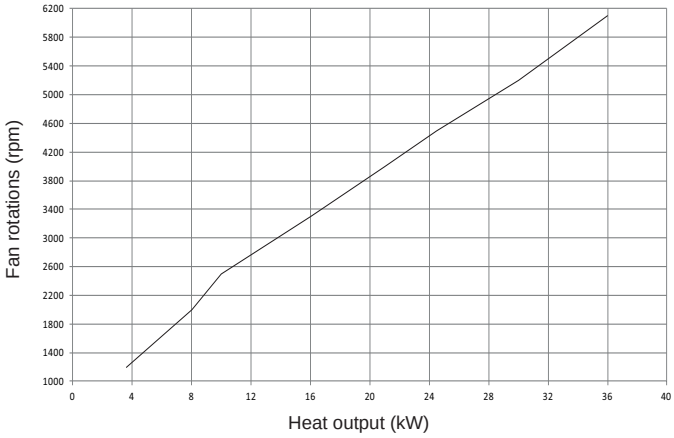

COs.a. curve (Qnheating)

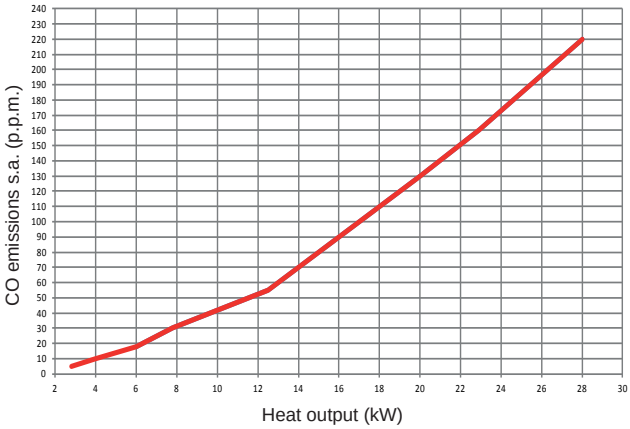

COs.a. curve (Qnheating)

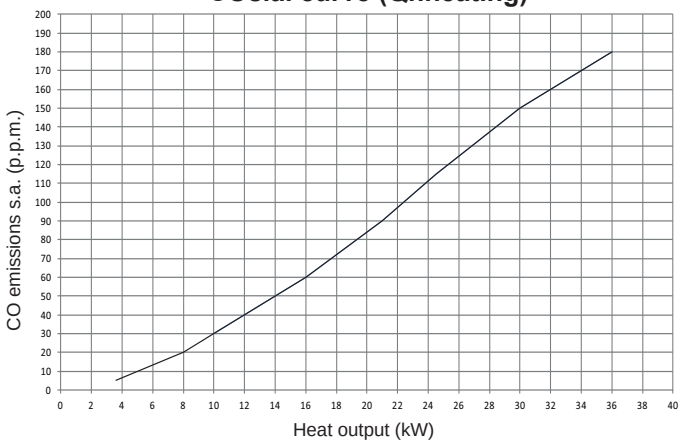

7.10.1 CHECKING THE FAN SPEED

Locate the CO button (see Fig 40 pos SW1).

Select the main selector switch to the ON position, press the CO button once, the display will then scroll through the fan speeds along with the relevant icon.

7.10.2 THERMOREGULATION

To set the temperature regulation curve, locate potentiometer (P3). By turning (P3), the curve is shown on the LCD display.

The user can adjust the temperature of the heating system indirectly by changing the required room temperature from between 15°C & 25°C, this will allow the PCB to recalculate the system temperature required, the default temperature for calculating the curve is 20°C.
The graph below can be used to determine the correct curve setting.

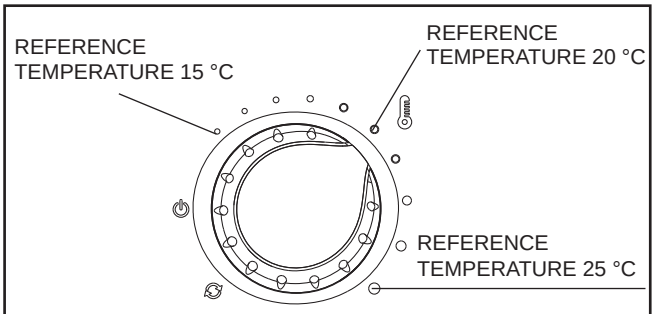

ROOM TEMPERATURE CURVE OFFSET

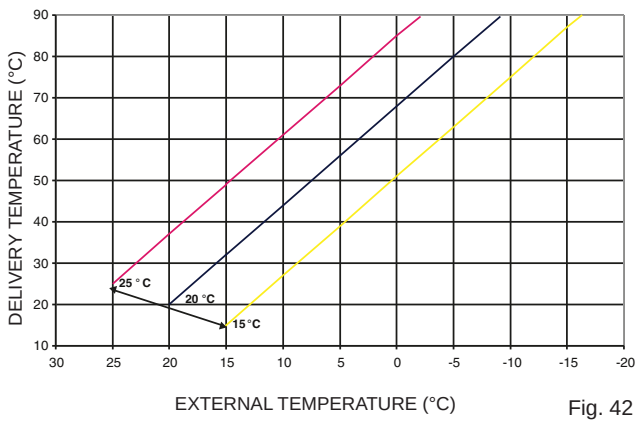

Fig. 42

CLIMATIC CURVES

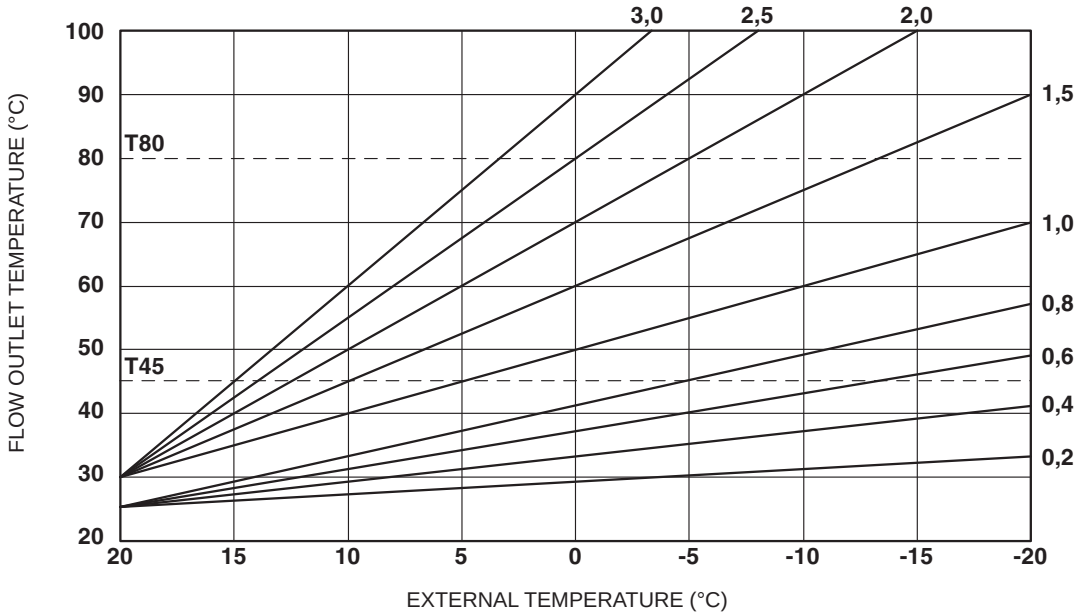

T80 Maximum set point for standard T range (JP7 removed)
T45 Maximum set point for low T range (JP7 inserted)

JP7 REMOVED

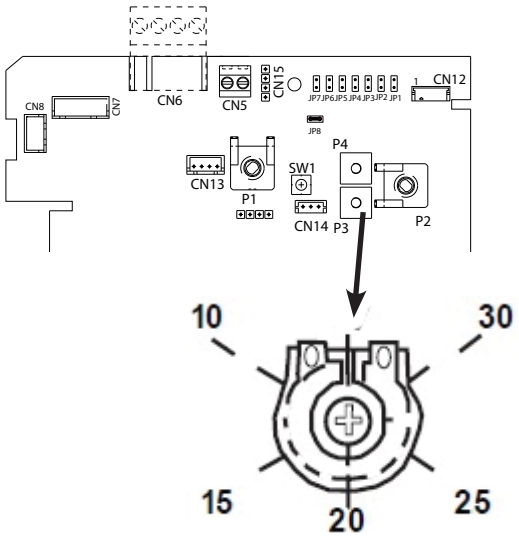

JP7 INSERTED

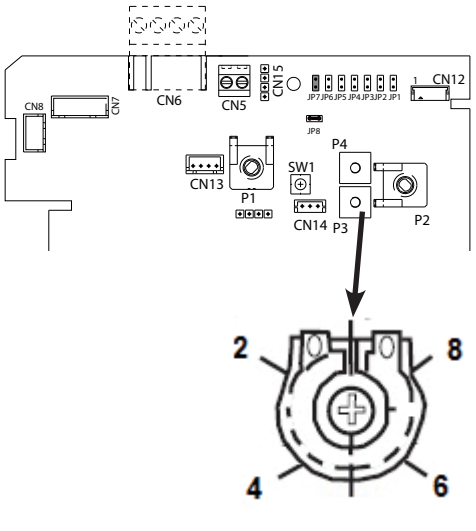

Fig. 43

SECTION 8 - WIRING DIAGRAMS

8.1 EXTERNAL WIRING

External controls must to be added to the system and they must be connected to the appliance as shown in the following diagrams. For advice on controls that are not featured in this book, please contact Vokera technical on **0844 3910999**

8.1.1 EXTERNAL WIRING LIMITATIONS

Low voltage and High voltage cables must be run separately.

8.2 TYPICAL CONTROL APPLICATIONS

The appliance can be used with the following controls:

- twin-channel programmers.

The appliance can be used in conjunction with typical 'S'-Plan systems and 'Y'-Plan systems.
Please contact Vokera technical should you require further detailed instruction.

8.3 OTHER DEVICES

Contact the controls manufacturer and/or Vokera technical department should you require more specific information on the suitability of a particular control. Further guidance on the recommended practice for the installation of external controls, can be found in CHeSS – HC5/HC6 (www.energyefficiency.gov.uk).

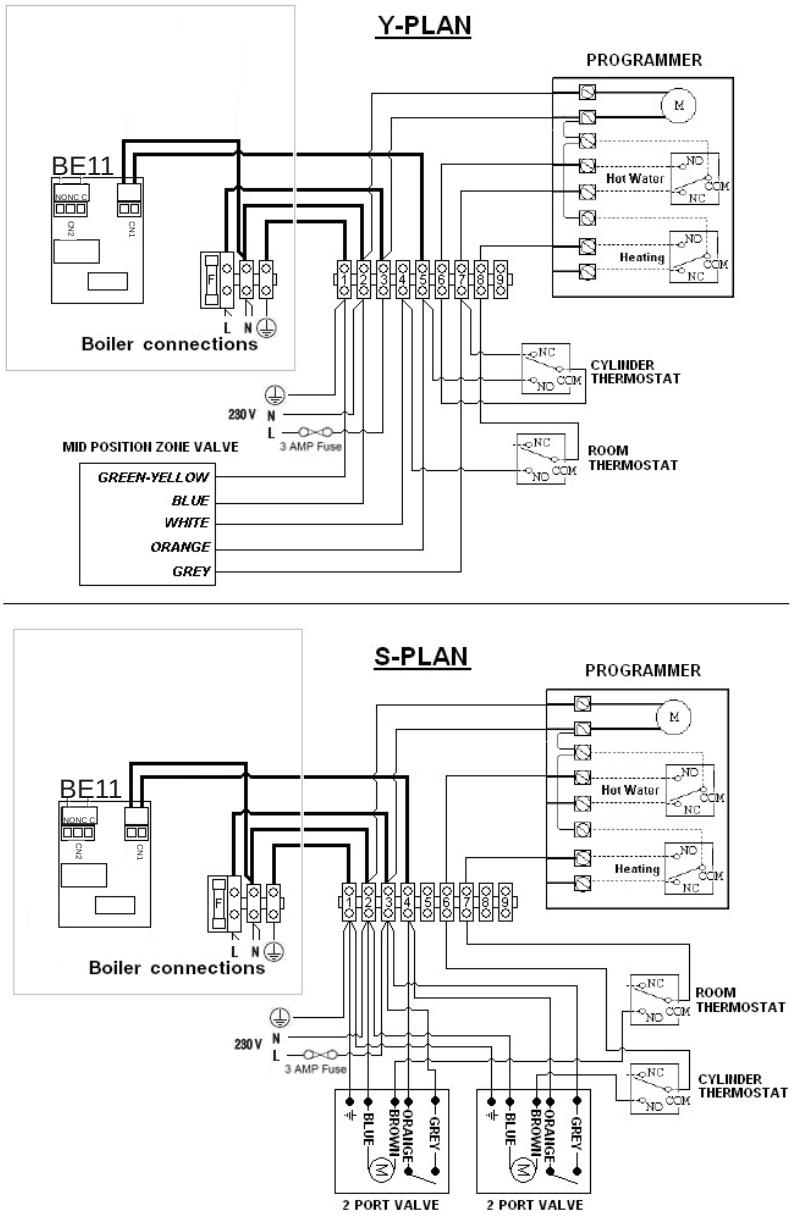

Fig. 44

FUNCTIONAL DIAGRAM

Fig. 45

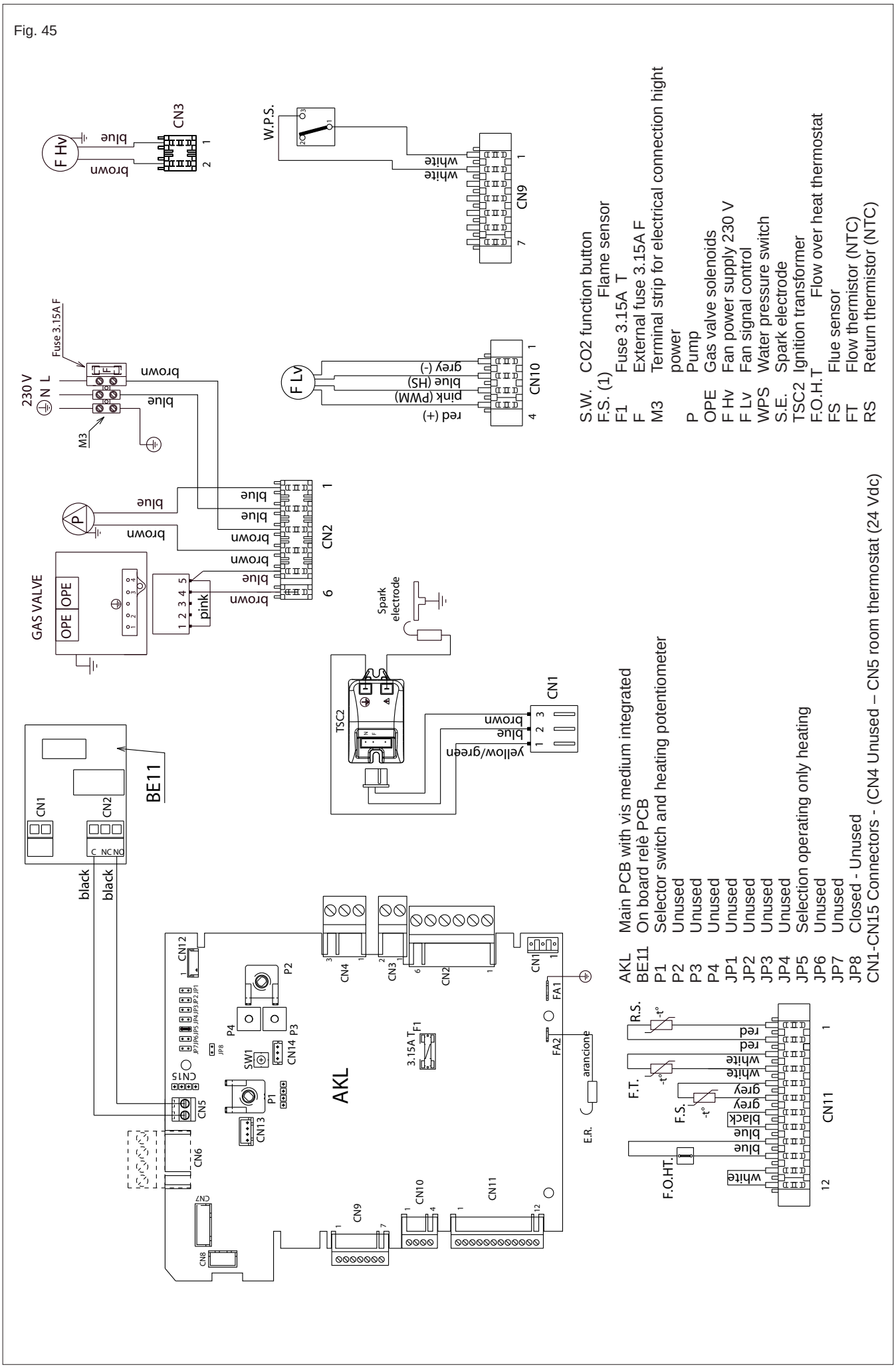

SECTION 10 - LPG INSTRUCTIONS

10.1 RELATED DOCUMENTS

BS 5440	**PARTS 1 & 2**	**FLUES & VENTILATION REQUIREMENTS**
BS 5449	**PART 1**	**FORCED CIRCULATION OF HOT WATER SYSTEMS**
BS 5482	**PART 1**	**DOMESTIC BUTANE & PROPANE GAS BURNERS IN PERMAMENT DWELLINGS**
BS 5546		**INSTALLATION OF GAS HOT WATER SUPPLIES FOR DOMESTIC PURPOSES**
BS 6798		**INSTALLATION OF BOILERS OF RATED NOT EXCEEDING 60kW**

10.2 TECHNICAL DATA

Gas Pressures	**Mynute *i20***	**Mynute *i30***
Inlet pressure	37.0 mbar	37.0 mbar
Heating maximum gas rate (kg/hr)	1.55	2.33
Minimum gas rate (kg/hr)	0.31	0.39
Injector size	3.4 mm (flap side) - 3.25 mm (free side)	3.55 mm (flap side) - 3.55 mm (free side)
CO_2 @ maximum output (%)	10.0	10.0
CO_2 @ minimum output (%)	10.0	10.0
CO @ maximum output (ppm)	190	160
CO @ minimum output (ppm)	20	15

10.3 CONVERTING THE APPLIANCE GAS TYPE

To convert the appliance to another gas type it is necessary to change the injector and adjust the gas valve (CO_2).
- To change the injector see 6.12.1
- To adjust CO2 values see 10.6

10.4 GAS SUPPLY

The gas supply must be connected to the appliance by a competent LPG installer and must be of sufficient size to supply the appliance at its maximum output. An existing supply must be checked to ensure that it is of adequate size to deal with the maximum rated input of this and any other appliances that it serves.

10.5 GAS SUPPLY INSTALLATION

The entire installation including the meter must be purged and checked for gas tightness.

10.6 CHECKING THE CO_2 AND ADJUSTING THE GAS VALVE

THE GAS VALVE MUST BE SET-UP OR ADJUSTED WITH THE AID OF A PROPERLY CALIBRATED FLUE GAS ANALYSER.
Isolate the appliance from the electrical supply and remove the appliance casing as described in 4.7.1. Set the flue gas analyser to read CO_2 and insert the probe into the flue analysis test point (fig. 40). Restore the electrical supply to the boiler and switch the boiler to the OFF mode.
Have access to the printed circuit board, locate and open the closing plug on the dash board **(L2** fig. 43**)**, locate and press the CO button (see fig. 43 pos. SW1). The appliance will now operate in CO_2 mode for approximately 15-minutes.

10.6.1 CO_2 FUNCTION SETTINGS

Locate the CO button (see 7.3)
Select the main selector switch in position ⏻

CO_2 FUNCTIONS	ACTION ON THE BUTTON	DISPLAY
combustion analysis mode	press once = burner running at maximum heating	ACO
gas valve maximun setting	press twice = burner running at maximum absolute	ACO
gas valve minimum setting	press three time = burner running at minimum	ACO

10.6.2 GAS VALVE MAXIMUM SETTING

Set the CO button at maximum (see 10.3.1), once the maximum is obtained check that it corresponds with the appropriate CO_2 value (Maximum) for the respective appliance. If the CO_2 reading is correct, proceed to gas valve minimum setting (10.7.2). However, if the CO_2 reading is incorrect, the maximum gas pressure must be adjusted as follows:
- using a 2.5mm Allen key, very slowly turn the maximum adjustment screw (see fig. 44) – clockwise to decrease, counter clockwise to increase – until the correct value is displayed on the CO_2 analyser (allow time for the analyser to stabilise).

10.6.3 GAS VALVE MINIMUM SETTING

Set the CO button at minimum (see 10.3.1), once the minimum is obtained check that it corresponds with the appropriate CO_2 value (Minimum) for the respective appliance. If the CO_2 reading is correct, proceed to completion (10.7.3).
However, if the CO_2 reading is incorrect, the minimum gas pressure must be adjusted as follows:
- –locate the minimum adjustment screw (fig. 44), using a suitable screwdriver remove the protection plug
- using a 4mm Allen key, very slowly turn the minimum adjustment screw (see fig. 44) - clockwise to increase, counter clockwise to decrease - until the correct value is displayed on the CO_2 analyser (allow time for the analyser to stabilise).

10.6.4 COMPLETION

On completion of the combustion analysis check and/or any gas valve adjustment, refit the plug **(L2** j**)** and move the mode selector to the ⏻ position. Remove the test probe from the test point and refit the sealing screw/s and/or cap.

IMPORTANT
A GAS TIGHTNESS CHECK MUST BE CARRIED OUT IF ANY GAS CARRYING COMPONENTS HAVE BEEN REMOVED, REPLACED OR DISTURBED.

ATTENTION
Gas type and appliance output **must be set** according to the specific appliance specification. Vokèra accepts no responsibility if the gas type is not correctly adjusted according to the respective appliance specification as detailed on the appliance data badge.

Benchmark Commissioning and Servicing Section

It is a requirement that the boiler is installed and commissioned to the manufacturers instructions and the data fields on the commissioning checklist completed in full.

To instigate the boiler guarantee the boiler needs to be registered with the manufacturer within one month of the installation.

To maintain the boiler guarantee it is essential that the boiler is serviced annually by a Gas Safe registered engineer who has been trained on the boiler installed. The service details should be recorded on the Benchmark Service Interval Record and left with the householder.

benchmark
COLLECTIVE MARK
THE MARK OF QUALITY FOR THE INSTALLATION, COMMISSIONING AND SERVICING OF DOMESTIC HEATING AND HOT WATER SYSTEMS

www.centralheating.co.uk

© Heating and Hotwater Industry Council (HHIC)

GAS BOILER SYSTEM COMMISSIONING CHECKLIST

This Commissioning Checklist is to be completed in full by the competent person who commissioned the boiler as a means of demonstrating compliance with the appropriate Building Regulations and then handed to the customer to keep for future reference.

Failure to install and commission according to the manufacturer's instructions and complete this Benchmark Commissioning Checklist will invalidate the warranty. This does not affect the customer's statutory rights.

Customer name:	Telephone number:
Address:	
Boiler make and model:	
Boiler serial number:	
Commissioned by (PRINT NAME):	Gas Safe register number:
Company name:	Telephone number:
Company address:	
	Commissioning date:
To be completed by the customer on receipt of a Building Regulations Compliance Certificate*	
Building Regulations Notification Number (if applicable):	

CONTROLS (tick the appropriate boxes)				
Time and temperature control to heating	Room thermostat and programmer/timer		Programmable room thermostat	
	Load/weather compensation		Optimum start control	
Time and temperature control to hot water	Cylinder thermostat and programmer/timer		Combination Boiler	
Heating zone valves	Fitted		Not required	
Hot water zone valves	Fitted		Not required	
Thermostatic radiator valves	Fitted		Not required	
Automatic bypass to system	Fitted		Not required	
Boiler interlock			Provided	

ALL SYSTEMS				
The system has been flushed and cleaned in accordance with BS7593 and boiler manufacturer's instructions			Yes	
What system cleaner was used?				
What inhibitor was used?		Quantity	litres	
Has a primary water system filter been installed?	Yes		No	

CENTRAL HEATING MODE measure and record:			
Gas rate	m^3/hr	**OR**	ft^3/hr
Burner operating pressure (if applicable)	mbar	**OR** Gas inlet pressure	mbar
Central heating flow temperature			°C
Central heating return temperature			°C

COMBINATION BOILERS ONLY				
Is the installation in a hard water area (above 200ppm)?	Yes		No	
If yes, and if required by the manufacturer, has a water scale reducer been fitted?	Yes		No	
What type of scale reducer has been fitted?				
DOMESTIC HOT WATER MODE Measure and Record:				
Gas rate	m^3/hr	**OR**	ft^3/hr	
Burner operating pressure (at maximum rate)	mbar	**OR** Gas inlet pressure at maximum rate	mbar	
Cold water inlet temperature			°C	
Hot water has been checked at all outlets	Yes		Temperature	°C
Water flow rate			l/min	

CONDENSING BOILERS ONLY		
The condensate drain has been installed in accordance with the manufacturer's instructions and/or BS5546/BS6798	Yes	

ALL INSTALLATIONS						
Record the following:	At max. rate:	CO	ppm	**AND**	CO/CO_2	Ratio
	At min. rate: (where possible)	CO	ppm	**AND**	CO/CO_2	Ratio
The heating and hot water system complies with the appropriate Building Regulations					Yes	
The boiler and associated products have been installed and commissioned in accordance with the manufacturer's instructions					Yes	
The operation of the boiler and system controls have been demonstrated to and understood by the customer					Yes	
The manufacturer's literature, including Benchmark Checklist and Service Record, has been explained and left with the customer					Yes	

Commissioning Engineer's Signature
Customer's Signature
(To confirm satisfactory demonstration and receipt of manufacturer's literature)

*All installations in England and Wales must be notified to Local Authority Building Control (LABC) either directly or through a Competent Persons Scheme. A Building Regulations Compliance Certificate will then be issued to the customer.

benchmark COLLECTIVE MARK
THE MARK OF QUALITY FOR THE INSTALLATION, COMMISSIONING AND SERVICING OF DOMESTIC HEATING AND HOT WATER SYSTEMS

© Heating and Hotwater Industry Council (HHIC)

SERVICE RECORD

It is recommended that your heating system is serviced regularly and that the appropriate Service Interval Record is completed.

Service Provider

Before completing the appropriate Service Record below, please ensure you have carried out the service as described in the manufacturer's instructions. Always use the manufacturer's specified spare part when replacing controls.

SERVICE 01					Date:
Engineer name:					
Company name:					
Telephone No:					
Gas safe register No:					
Record:	At max. rate:	CO	ppm	**AND**	CO_2 %
	At min. rate: (Where Possible)	CO	ppm	**AND**	CO_2 %
Comments:					
Signature					

SERVICE 02					Date:
Engineer name:					
Company name:					
Telephone No:					
Gas safe register No:					
Record:	At max. rate:	CO	ppm	**AND**	CO_2 %
	At min. rate: (Where Possible)	CO	ppm	**AND**	CO_2 %
Comments:					
Signature					

SERVICE 03					Date:
Engineer name:					
Company name:					
Telephone No:					
Gas safe register No:					
Record:	At max. rate:	CO	ppm	**AND**	CO_2 %
	At min. rate: (Where Possible)	CO	ppm	**AND**	CO_2 %
Comments:					
Signature					

SERVICE 04					Date:
Engineer name:					
Company name:					
Telephone No:					
Gas safe register No:					
Record:	At max. rate:	CO	ppm	**AND**	CO_2 %
	At min. rate: (Where Possible)	CO	ppm	**AND**	CO_2 %
Comments:					
Signature					

SERVICE 05					Date:
Engineer name:					
Company name:					
Telephone No:					
Gas safe register No:					
Record:	At max. rate:	CO	ppm	**AND**	CO_2 %
	At min. rate: (Where Possible)	CO	ppm	**AND**	CO_2 %
Comments:					
Signature					

SERVICE 06					Date:
Engineer name:					
Company name:					
Telephone No:					
Gas safe register No:					
Record:	At max. rate:	CO	ppm	**AND**	CO_2 %
	At min. rate: (Where Possible)	CO	ppm	**AND**	CO_2 %
Comments:					
Signature					

SERVICE 07					Date:
Engineer name:					
Company name:					
Telephone No:					
Gas safe register No:					
Record:	At max. rate:	CO	ppm	**AND**	CO_2 %
	At min. rate: (Where Possible)	CO	ppm	**AND**	CO_2 %
Comments:					
Signature					

SERVICE 08					Date:
Engineer name:					
Company name:					
Telephone No:					
Gas safe register No:					
Record:	At max. rate:	CO	ppm	**AND**	CO_2 %
	At min. rate: (Where Possible)	CO	ppm	**AND**	CO_2 %
Comments:					
Signature					

SERVICE 09					Date:
Engineer name:					
Company name:					
Telephone No:					
Gas safe register No:					
Record:	At max. rate:	CO	ppm	**AND**	CO_2 %
	At min. rate: (Where Possible)	CO	ppm	**AND**	CO_2 %
Comments:					
Signature					

SERVICE 10					Date:
Engineer name:					
Company name:					
Telephone No:					
Gas safe register No:					
Record:	At max. rate:	CO	ppm	**AND**	CO_2 %
	At min. rate: (Where Possible)	CO	ppm	**AND**	CO_2 %
Comments:					
Signature					

*All installations in England and Wales must be notified to Local Authority Building Control (LABC) either directly or through a Competent Persons Scheme. A Building Regulations Compliance Certificate will then be issued to the customer.

benchmark COLLECTIVE MARK
THE MARK OF QUALITY FOR THE INSTALLATION, COMMISSIONING AND SERVICING OF DOMESTIC HEATING AND HOT WATER SYSTEMS

© Heating and Hotwater Industry Council (HHIC)

COMMISSIONING: CO AND COMBUSTION RATIO CHECK

BEFORE CO AND COMBUSTION RATIO CHECK

The installation instructions should have been followed, gas type verified and gas supply pressure/rate checked as required prior to commissioning.

As part of the installation process, **ESPECIALLY WHERE A FLUE HAS BEEN FITTED BY PERSONS OTHER THAN THE BOILER INSTALLER**, visually check the integrity of the whole flue system to confirm that all components are correctly assembled, fixed and supported. Check that the maximum flue lengths have not been exceeded and all guidance has been followed (e.g. Technical Bulletin 008).

The flue gas analyser should be of the correct type, as specified by BS 7967.

Before use, the flue gas analyser should have been maintained and calibrated as specified by the manufacturer. The installer must have the relevant competence for use of the analyser.

Check and zero the analyser **IN FRESH AIR**, as per analyser manufacturer's instructions.

NOTE

The air/gas ratio valve is factory-set and must not be adjusted during commissioning unless this action is recommended, following contact with the Vokera technical help line. If any such adjustment is recommended and further checking of the boiler is required, the engineer must be competent to carry out this work and to use the flue gas analyser accordingly. If the boiler requires conversion to operate with a different gas family (e.g., conversion from natural gas to LPG) separate guidance will be provided by the Vokera technical help line and must be followed.

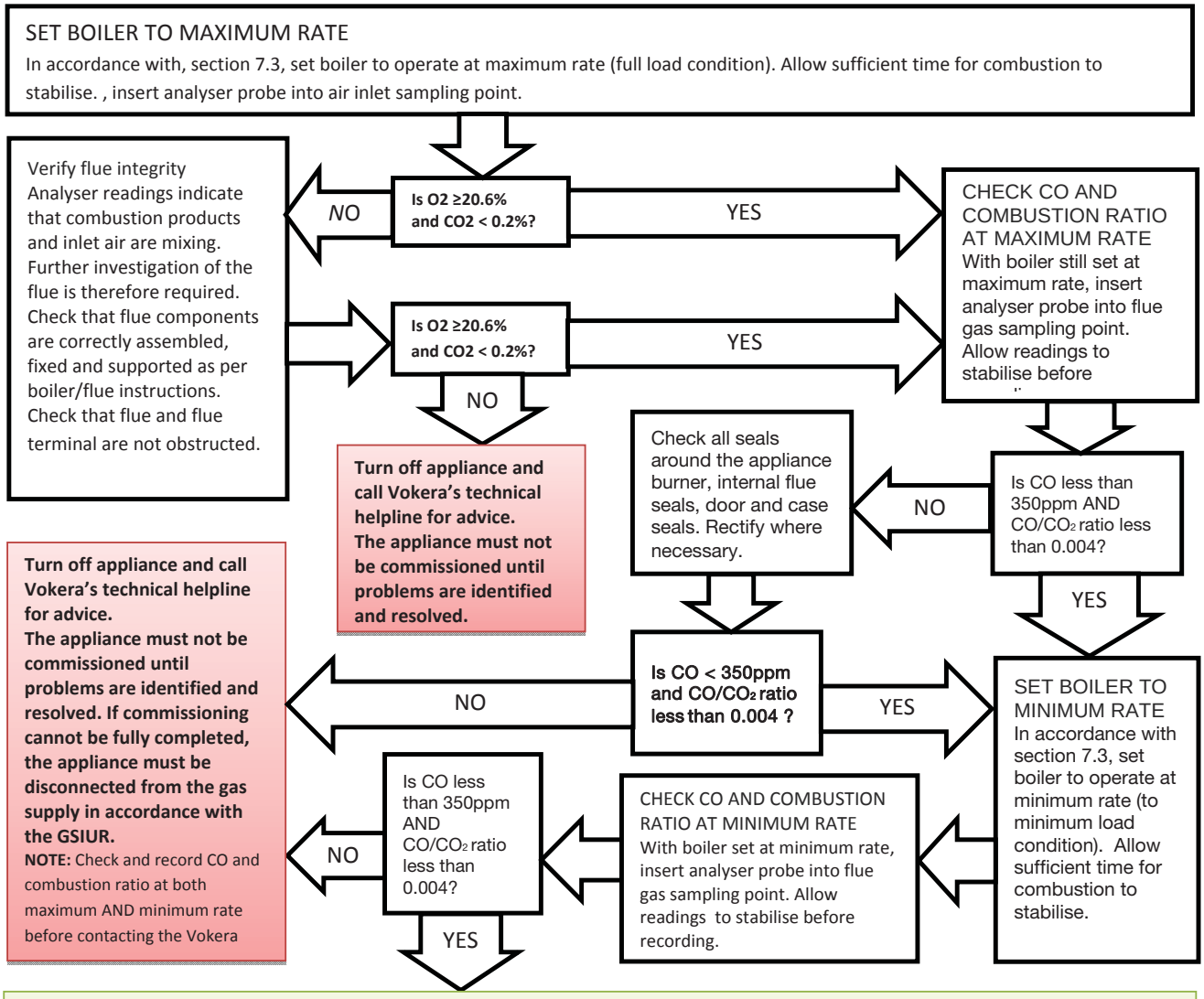

Boiler is operating satisfactorily
No further actions required.

Ensure test points are capped, boiler case is correctly replaced and all other commissioning procedures are completed.
Complete Benchmark Checklist, recording CO and combustion ratio readings as required.

Vokèra
heating for life

Cod. 20073574 - 11/13 - Ed. 1

Registered address:
Vokèra Ltd
Borderlake House
Unit 7 Riverside Industrial Estate
London Colney
Herts AL2 1HG

enquiries@vokera.co.uk

www.vokera.co.uk
www.vokera.ie

Sales, General Enquires
T 0844 391 0999
F 0844 391 0998

Vokèra Ireland
West Court, Callan
Co Kilkenny
T 056 7755057
F 056 7755060

Vokèra Limited reserve the right to change
specification without prior notice
Consumers statutory rights are not affected.

A Riello Group Company.
Company Reg No: 1047779