Vokèra
heating for life

Easi-Heat Plus C

High efficiency combi boiler

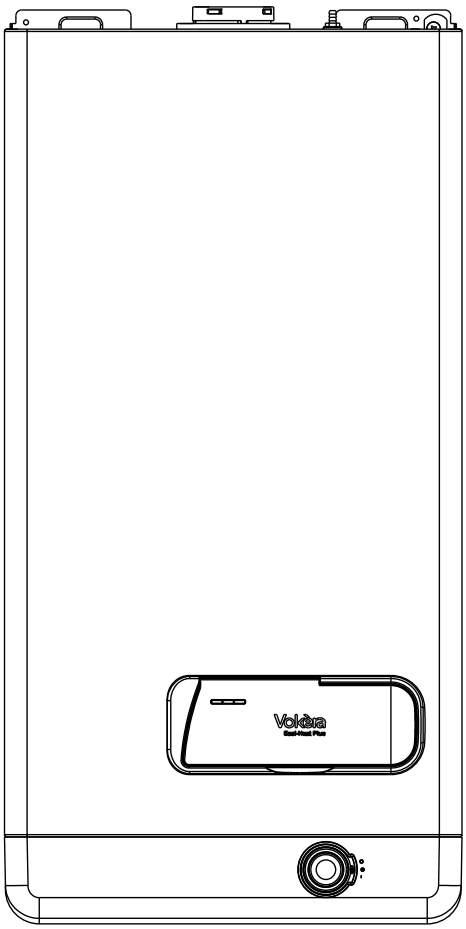

Users Instructions

Installation & Servicing Instructions

CE

Easi-Heat Plus 25C G.C. N° 47-364-29
Easi-Heat Plus 29C G.C. N° 47-364-30

THESE INSTRUCTIONS
TO BE RETAINED
BY USER

benchmark
COLLECTIVE MARK
THE MARK OF QUALITY FOR THE INSTALLATION, COMMISSIONING AND SERVICING OF DOMESTIC HEATING AND HOT WATER SYSTEMS

Vokèra is a licensed member of the Benchmark scheme which aims to improve the standards of installation and commissioning of domestic hot water systems in the UK.

Users instructions

1. THINGS YOU SHOULD KNOW 1
1.1 GAS APPLIANCES 1
1.2 ELECTRICAL SUPPLY 1
1.3 GUARANTEE REGISTRATION CARD 1
1.4 APPLIANCE COMMISSIONING CHECKLIST (UK only) 1
1.5 HOW DOES IT WORK? 1
1.6 DIMENSIONS 1
1.7 CLEARANCES REQUIRED 1
1.8 FROST PROTECTION SYSTEM 1
1.9 APPLIANCE STATUS INDICATORS 1

2. GETTING STARTED 3
2.1 BEFORE SWITCHING ON 3
2.2 APPLIANCE CONTROLS 3
2.3 LIGHTING THE BOILER 3
2.4 ADJUSTING THE HEATING TEMPERATURE 3
2.5 ADJUSTING THE HOT WATER TEMPERATURE 3
2.6 EXPLANATION OF FEATURES 3
2.7 AUTOMATIC TEMPERATURE CONTROL 3

3. HOW TO 3
3.1 HOW TO TOP-UP THE SYSTEM PRESSURE 3
3.2 HOW TO RESET THE APPLIANCE 3
3.3 HOW TO SHUT DOWN THE SYSTEM FOR SHORT PERIODS 3
3.4 HOW TO SHUT DOWN THE SYSTEM FOR LONG PERIODS 3
3.5 HOW TO CARE FOR THE APPLIANCE 3

4. WHAT IF... 4
4.1 WHAT IF I SUSPECT A GAS LEAK 4
4.2 WHAT IF I HAVE FREQUENTLY TO TOP-UP THE SYSTEM 4
4.3 WHAT IF THE APPLIANCE IS DUE ITS ANNUAL SERVICE 4
4.4 WHAT IF I NEED TO CALL AN ENGINEER 4

5. SETTING THE VOKÈRA... 4
5.1 SETTING THE VOKÈRA MECHANICAL CLOCK 4

Installation and servicing instructions

SECTION 1 - DESIGN PRINCIPLES AND OPERATING SEQUENCE 6
1.1 PRINCIPLE COMPONENTS 6
1.2 MODE OF OPERATION (at rest) 6
1.3 MODE OF OPERATION (Heating) 6
1.4 MODE OF OPERATION (Hot water) 6
1.5 SAFETY DEVICES 6

SECTION 2 - TECHNICAL DATA 7
2.1 CENTRAL HEATING 7
2.2 DOMESTIC HOT WATER 7
2.3 GAS PRESSURES 7
2.4 EXPANSION VESSEL 7
2.5 DIMENSIONS 7
2.6 CLEARANCES 7
2.7 CONNECTIONS 7
2.8 ELECTRICAL 7
2.9 FLUE DETAILS (CONCENTRIC 60-100) 7
2.9A FLUE DETAILS (CONCENTRIC 80-125) 7
2.10 EFFICIENCY 7
2.11 EMISSIONS 7
2.12 PUMP DUTY 9

SECTION 3 - GENERAL REQUIREMENTS (UK) 10
3.1 RELATED DOCUMENTS 10
3.2 LOCATION OF APPLIANCE 10
3.3 GAS SUPPLY 10
3.4 FLUE SYSTEM 10
3.5 AIR SUPPLY 10
3.6 WATER CIRCULATION 10
3.7 ELECTRICAL SUPPLY 11
3.8 MOUNTING ON A COMBUSTIBLE SURFACE 11
3.9 TIMBER FRAMED BUILDINGS 11
3.10 INHIBITORS 11
3.11 SHOWERS 11

SECTION 3A - GENERAL REQUIREMENTS (EIRE) 11
3A.1 RELATED DOCUMENTS 11
3A.2 LOCATION OF APPLIANCE 11
3A.3 GAS SUPPLY 11
3A.4 FLUE SYSTEM 11
3A.5 AIR SUPPLY 12
3A.6 WATER CIRCULATION 12
3A.7 ELECTRICAL SUPPLY 12
3A.8 MOUNTING ON A COMBUSTIBLE SURFACE 12
3A.9 TIMBER FRAMED BUILDINGS 12
3A.10 INHIBITORS 12
3A.11 SHOWERS 12
3A.12 DECLARATION OF CONFORMITY 12

SECTION 4 - INSTALLATION 13
4.1 DELIVERY 13
4.2 CONTENTS 13
4.3 UNPACKING 13
4.4 PREPARATION FOR MOUNTING THE APPLIANCE 13
4.5 FITTING THE FLUE 13
4.6 CONNECTING THE GAS AND WATER 15
4.7 ELECTRICAL CONNECTIONS 15

SECTION 5 - COMMISSIONING 16
5.1 GAS SUPPLY INSTALLATION 16
5.2 THE HEATING SYSTEM 16
5.3 INITIAL FILLING OF THE SYSTEM 16
5.4 INITIAL FLUSHING OF THE SYSTEM 16
5.5 PRE-OPERATION CHECKS 16
5.6 INITIAL LIGHTING 16
5.7 CHECKING GAS PRESSURE AND COMBUSTION ANALYSIS 16
5.8 FINAL FLUSHING OF THE HEATING SYSTEM 17
5.9 SETTING THE FLOW OUTLET TEMPERATURE 17
5.10 SETTING THE SYSTEM DESIGN PRESSURE 17
5.11 REGULATING THE CENTRAL HEATING SYSTEM 17
5.12 FINAL CHECKS 17
5.13 INSTRUCTING THE USER 17

SECTION 6 - SERVICING INSTRUCTIONS 17
6.1 GENERAL 17
6.2 ROUTINE ANNUAL SERVICING 17
6.3 REPLACEMENT OF COMPONENTS 18
6.4 COMPONENT REMOVAL PROCEDURE 18
6.5 PUMP ASSEMBLY 18
6.6 SAFETY VALVE 18
6.7 LOWER AUTOMATIC AIR RELEASE VALVE 18
6.8 WATER PRESSURE SWITCH 18
6.9 FLOW THERMISTOR 18
6.10 RETURN THERMISTOR 19
6.11 PRINTED CIRCUIT BOARD 19
6.12 GAS VALVE 19
6.13 ELECTRODES 19
6.14 FLUE FAN & MIXER 19
6.15 BURNER 19
6.16 MAIN HEAT EXCHANGER 20
6.17 AUTOMATIC BY-PASS & DHW NON-RETURN VALVE 20
6.18 EXPANSION VESSEL REMOVAL 20
6.19 CONDENSE TRAP REMOVAL 20
6.20 FLUE COLLECTOR REMOVAL 21

SECTION 7 - CHECKS, ADJUSTMENTS AND FAULT FINDING 22
7.1 CHECKING APPLIANCE OPERATION 22
7.2 APPLIANCE MODES OF OPERATION 22
7.3 CHECKING THE CO_2 AND ADJUSTING THE GAS VALVE 22
7.4 COMBUSTION ANALYSIS TEST 23
7.5 CHECKING THE EXPANSION VESSEL 23
7.6 EXTERNAL FAULTS 23
7.7 ELECTRICAL CHECKS 23
7.8 FAULT FINDING 24
7.9 COMPONENT VALUES & CHARACTERISTICS 24

SECTION 8 - WIRING DIAGRAMS 25
8.1 EXTERNAL WIRING 25
8.2 TYPICAL CONTROL APPLICATIONS 25
8.3 OTHER DEVICES 25
8.4 VOKÈRA LOWER COVER MECHANICAL CLOCK 25

SECTION 9 - LPG INSTRUCTIONS 27
9.1 RELATED DOCUMENTS 27
9.2 TECHNICAL DATA 27
9.3 CONVERTING THE APPLIANCE GAS TYPE 27
9.4 GAS SUPPLY 27
9.5 GAS SUPPLY INSTALLATION 27
9.6 CHECKING THE CO_2 AND ADJUSTING THE GAS VALVE 27

Commissioning checklist 28

Benchmark 29-31

USERS INSTRUCTIONS

INTRODUCTION

Dear Customer

Your Vokèra Easi-Heat Plus C boiler has been designed to meet and exceed the very latest standards in gas central heating technology, and if cared for, will give years of reliable use and efficiency.
Please therefore take some time to read these instructions carefully.

Do's and Don't's

- **Do** ensure that the system pressure is periodically checked
- **Do** ensure that the boiler should not be used by children or unassisted disabled people
- **Do** ensure that you know how to isolate the appliance in an emergency
- **Do** ensure that you are familiar with the appliance controls
- **Do** ensure that your installer has completed the appliance log book section
- **Do not** attempt to remove the appliance casing or gain internal access
- **Do not** hang clothes etc. over the appliance
- **Do not** forget to have the appliance serviced annually.

This booklet is an integral part of the appliance. It is therefore necessary to ensure that the booklet is handed to the person responsible for the property in which the appliance is located/installed. A replacement copy can be obtained from Vokèra customer services.

1. THINGS YOU SHOULD KNOW

1.1 GAS APPLIANCES

Gas Safety (Installations and Use) Regulations (UK).
In the interests of your safety and that of others it is a legal requirement that all gas appliances are installed and correctly maintained by a competent person and in accordance with the latest regulations.

1.2 ELECTRICAL SUPPLY

Please ensure that this appliance has been properly connected to the electrical supply by means of a double pole isolator or un-switched socket, and that the correct size of fuse (3 AMP) has been fitted.
Warning: this appliance must be earthed!

1.3 GUARANTEE REGISTRATION CARD

Please take the time to fill out your guarantee registration card. The completed warranty card should be posted within 30 days of installation.

1.4 APPLIANCE COMMISSIONING CHECKLIST (UK only)

A checklist section can be found at the rear of the appliance installation booklet. This important document must be completed during the installation/commissioning of your boiler. All GAS SAFE registered installers carry a GAS SAFE ID card, and have a registration number. These details should be recorded in the Benchmark commissioning checklist section within the installation booklet. You can check your installers details by calling GAS SAFE direct on 08004085500. Failure to install and commission the appliance in accordance with the manufacturers instructions will invalidate the warranty. This does not affect your statutory rights.

1.5 HOW DOES IT WORK?

Your Easi-Heat Plus C boiler supplies heated water to your radiators and hot water to your hot water taps.
The central heating is controlled via a time clock and any thermostats that your installer may have fitted. The boiler will light when it receives a request from the time clock via any thermostat that may be installed, or whenever a hot water outlet (tap) is opened.
Your Easi-Heat Plus C boiler lights electronically and does not have a pilot light.
In the unlikely event of a fault developing with your boiler, the supply of gas to the burner will be terminated automatically.

1.6 DIMENSIONS

Easi-Heat Plus 25-29 C	
HEIGHT	792 mm
WIDTH	405 mm

1.7 CLEARANCES REQUIRED

ABOVE	150 mm
BELOW	150 mm
LEFT SIDE	12 mm
RIGHT SIDE	12 mm
FRONT	600 mm

1.8 FROST PROTECTION SYSTEM

The Easi-Heat Plus C is equipped with a built-in frost protection system, this enables the boiler to over-ride the time controls – even if switched off – and operate the burner and/or pump, should the temperature drop below 5 °C for the main and for the DHW line. In particular the burner will be in ON status until the main temperature reaches 35 °C for CH appliance and 55 °C for DHW appliance.
Please note that the frost protection system is designed to protect the appliance only, should frost protection be required for the heating system, additional controls may be required.

NOTE

The frost protection system is reliant on the appliance having a permanent electrical supply, and being in a non-fault condition.

1.9 APPLIANCE STATUS INDICATORS

Your boiler is equipped with 3 status LED indicators, the Green LED indicates that the flame is present, the Red LED indicates the appliance has detected a fault, whilst the Yellow LED indicates that DHW pre-heat function is working or Servicing operation is in progress.

Fig. 1

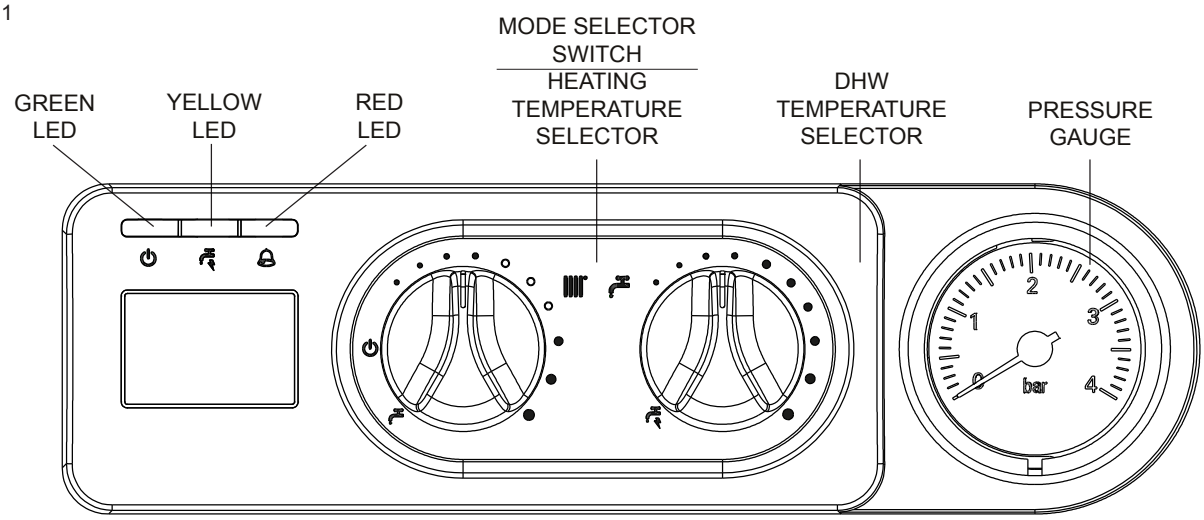

BOILER STATUS LED

Green LED Boiler is working/responding to a heating/hot water request

Red LED Boiler has identified a fault and has failed-safe. Refer to instructions on how to reset

Yellow LED DHW pre-heat function working/Service operation

DHW TEMPERATURE SELECTOR

Move the selector clockwise to increase the hot water outlet temperature, or counter-clockwise to reduce the temperature

PRESSURE GAUGE

Ensure the system pressure is set correctly (minimum 0.5-bar)

MODE SELECTOR SWITCH/HEATING TEMPERATURE SELECTOR

Mode selector switch:

Hot water only - Select this position if you want the boiler to supply hot water only (no heating).

Hot water temperature selector: move the selector clockwise to increase the heating outlet temperature, or counter-clockwise to reduce the temperature (range: 37 °C - 60 °C).

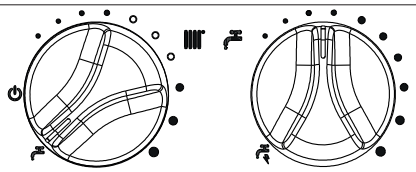

DHW pre-heat function - Turning the domestic hot water temperature adjustment knob to the symbol activates the pre-heating function. Bring the domestic hot water temperature adjustment knob back to the required position. The activation of this function is indicated with the yellow led on. This function keeps the water in the domestic hot water exchanger hot, to reduce standby times when a request is made. To deactivate the pre-heat function, rotate the domestic hot water temperature adjustment knob back to the symbol. Bring the domestic hot water temperature adjustment knob back to the required position. This function cannot be activated when the boiler is OFF: function selector to OFF position.

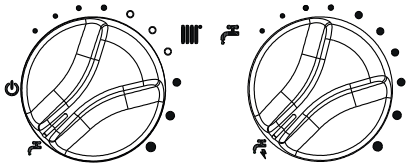

Heating & hot water - Select this position when you want the boiler to respond to a heating and hot water request from the time-clock programmer.

Heating temperature selector: move the selector clockwise to increase the heating outlet temperature, or counter-clockwise to reduce the temperature (range: 40 °C - 80 °C for standard central heating).
The automatic temperature control function (SARA) is factory disabled. To enable this function please contact the Vokèra Customer Service.

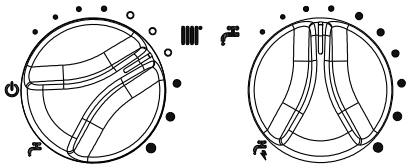

Boiler at OFF/standby - Select this position when you want the boiler to be switched off for short periods (days) or if the boiler requires to be reset.

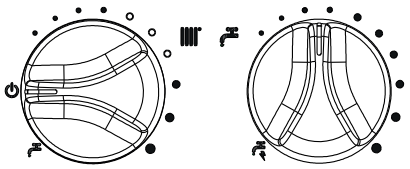

Pressure gauge shows the current pressure of your heating system, the gauge should be set between 1 and 1.5 BAR. When the appliance is operating the gauge may rise or fall slightly, this is quite normal. The minimum permissible level for the safe and efficient operation of the appliance is 0.5 BAR. Should the pressure fall below 0.5 BAR, the boiler may lockout.

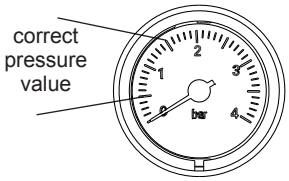

2. GETTING STARTED

2.1 BEFORE SWITCHING ON

Before switching the appliance on, please familiarise yourself with:
- how to isolate the appliance from the gas, water, and electricity supplies;
- how to check and top-up – if necessary – the system water pressure;
- the time clock or programmer (if fitted);
- any external thermostats and their functions;
- the appliance controls.

2.2 APPLIANCE CONTROLS (see fig. 1)

The appliance controls are situated on the lower front of the appliance. The appliance controls include:
- pressure gauge;
- appliance mode selector;
- temperature selector;
- burner ON mode (green);
- fault indicator (red);
- DHW pre-heat function working/servicing mode indicator (yellow)
- optional integral time clock/programmer (if fitted).

NOTE
The appliance frost protection is active in all the boiler modes.
The **temperature selectors** can be used to vary the temperature of the water that circulates around your radiators and the water that flows from your hot water taps. The temperature range is adjustable between 40 °C and 80 °C for the central heating, and between 37 °C and 60 °C for the hot water.
The **3 LED normally** shows the operating temperature of the appliance.
When the **status indicator (Green) is lit** it indicates that the flame is present and the burner is ON.
When the **fault indicator (Red) is lit** it indicates that the appliance has identified a possible fault and performed a safety lockout.
When the yellow LED is lit it indicates that DHW pre-heat function is working and that there is a Servicing operation in progress.
The **integral time clock (when fitted)** can be used to switch the heating on and off at pre-determined intervals.

2.3 LIGHTING THE BOILER

Ensure the gas and electrical supply to the boiler are turned on.
Turn the mode selector switch to the **ON** position. When there is a request for heating or hot water via the time clock or programmer, the boiler will begin an ignition sequence. When the appliance reaches the CH set temperature, the burner will go off for a minimum period of approximately 3 minutes.
When the programmer/time clock or external thermostats heating request has been satisfied, the appliance will switch off automatically.

2.4 ADJUSTING THE HEATING TEMPERATURE

Rotate the temperature selector – clockwise to increase, counter-clockwise to decrease – to the desired temperature setting. The temperature can be set from a minimum of 40 °C to a maximum of 80 °C (if standard CH mode is selected).

2.5 ADJUSTING THE HOT WATER TEMPERATURE

Rotate the temperature selector – clockwise to increase, counter-clockwise to decrease – to the desired temperature setting. The temperature can be set from a minimum of 37 °C to a maximum of 60 °C. If the temperature at the outlet is still not sufficiently hot enough, it may be necessary to reduce the flow of water at the hot water outlet (tap).

NOTE
If the appliance fails to ignite during the ignition sequence, it will enter a lockout condition. Should this occur, please allow a period of at least two minutes before re-setting the appliance.

2.6 EXPLANATION OF FEATURES

Although the Vokèra Easi-Heat Plus C has been designed for simplicity of use, it utilises the latest in boiler technology, enabling a host of functions to be carried out simultaneously.

2.7 AUTOMATIC TEMPERATURE CONTROL

The automatic temperature control function (SARA), permits the boiler (when the heating temperature selector is set within 5 and 7 sector) to automatically adjust (raise) the heating.
The activation and the disable of the function is visualized by blinking the green led.

3. HOW TO...

3.1 HOW TO TOP-UP THE SYSTEM PRESSURE (fig. 1-2)

The system pressure must be checked periodically to ensure the correct operation of the boiler. The needle on the gauge should be reading between 1 and 1.5 BAR when the boiler is in an off position and has cooled to room temperature. If the pressure requires 'topping-up' use the following instructions as a guide.
- Locate the filling valve connections (usually beneath the boiler, see fig. 2).
- Attach the filling loop to both connections.
- Open the filling valve slowly until you hear water entering the system.
- Close the filling valve when the pressure gauge (on the boiler) reads between 1 and 1.5 BAR (see fig. 1).
- Remove the filling loop from the connections.

3.2 HOW TO RESET THE APPLIANCE

When the red fault LED is illuminated, the appliance will require to be reset manually. Before resetting the boiler, check what action is required to be taken, using the information on the fault code table below. Allow a period of two minutes to elapse before rotate the mode selector knob across the ⏻ position (see fig. 1).

IMPORTANT
If the appliance requires to be reset frequently, it may be indicative of a fault, please contact your installer or Vokèra Customer Services for further advice.

3.3 HOW TO SHUT DOWN THE SYSTEM FOR SHORT PERIODS

The system and boiler can be shut down for short periods by simply turning the time clock to the off position. It is also advisable to turn off the main water supply to the house.

3.4 HOW TO SHUT DOWN THE SYSTEM FOR LONG PERIODS

If the house is to be left unoccupied for any length of time – especially during the winter – the system should be thoroughly drained of all water. The gas, water, and electricity supply to the house should also be turned off. For more detailed advice contact your installer.

3.5 HOW TO CARE FOR THE APPLIANCE

To clean the outer casing use only a clean damp cloth.
Do not use any scourers or abrasive cleaners.

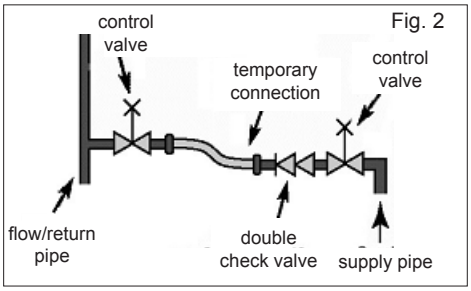

Fig. 2

APPLIANCE STATUS LED AND FAULT CODES

	Alarm type	Led RED	Led YELLOW	Led GREEN	Action
Purge cycle mode active	NA	BLINKING	BLINKING	BLINKING	
Alarm high limit thermostat	Final	BLINKING	OFF	OFF	Reset appliance. Call engineer if fault re-occurs
Alarm system water pressure	Final	ON	OFF	ON	Check/refill system pressure, reset, check. Call engineer if fault re-occurs.
Alarm safety shutdown and/or	Final internal fault	ON	OFF	OFF	Reset appliance. Call engineer if fault re-occurs.
Temporary fault	Temporary	OFF	OFF	BLINKING	None
DHW pre-heat function	NA	OFF	ON	OFF	None
Service operation	NA	OFF	BLINKING	OFF	None
Flame ON	NA	OFF	OFF	ON	None
Fault sensors	Final	BLINKING	OFF	BLINKING	Reset appliance. Call engineer if fault re-occurs
Boiler stand-by	NA	OFF	OFF	BLINKING	None

4. WHAT IF...

4.1 WHAT IF I SUSPECT A GAS LEAK

If you suspect a gas leak, turn off the gas supply at the gas meter and contact your installer or local gas supplier. If you require further advice please contact your nearest Vokèra office.

4.2 WHAT IF I HAVE FREQUENTLY TO TOP-UP THE SYSTEM

If the system regularly requires topping-up, it may be indicative of a leak. Please contact your installer and ask him to inspect the system.

4.3 WHAT IF THE APPLIANCE IS DUE ITS ANNUAL SERVICE

Advice for tenants only
Your landlord should arrange for servicing.

Advice for homeowners
Please contact Vokèra Customer Service **(0844 3910999 (UK) or 056 7755057 (ROI)** if you would prefer a Vokèra service engineer or agent to service your appliance. Alternatively your local GAS SAFE registered engineer may be able to service the appliance for you.

4.4 WHAT IF I NEED TO CALL AN ENGINEER

If you think your boiler may have developed a fault, please contact your installer or Vokèra Customer Services **(0844 3910999 (UK) or 056 7755057 (ROI)** have all your details to hand including full address and postcode, relevant contact numbers, and your completed appliance log book.

5. SETTING THE VOKÈRA...

5.1 SETTING THE VOKÈRA MECHANICAL CLOCK

If your boiler has been installed with the Vokèra mechanical clock, it can be used and adjusted as follows:

Setting the time
The time of day can be set by grasping the outer edge of the black dial and turning it in a clockwise direction until the correct time is in line with the white pointer.

Setting the "switching times"
The **"ON" periods** are set by sliding the black tappets, adjacent to the time periods required, to the outer edge of the dial. The tappets that remain at the centre of the dial will be the **"OFF" periods**.
The smallest switching time (ON or OFF) is 15 minutes.
To select **"AUTO"** mode move the selector switch in central position.
To select **"ON"** mode move the selector switch in the bottom position.
To select **"OFF"** mode move the selector switch in the upper position.

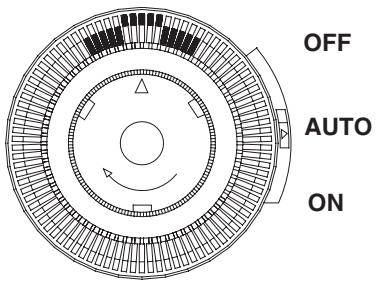

Fig. 3

INSTALLATION AND SERVICING INSTRUCTIONS

INTRODUCTION

All installers are asked to follow the Benchmark Scheme by adhering to the Code of Practise, which can be obtained from www.centralheating.co.uk.

The Easi-Heat Plus C comprises a range of high-efficiency combination boilers with outputs to DHW of 25kW and 29kW respectively.

These appliances – by design – incorporate electronic ignition, circulating pump, expansion vessel, safety valve, pressure gauge and automatic by-pass.

The Easi-Heat Plus C range is produced as room sealed, category II2H3P appliances, suitable for internal wall mounting applications only.

Each appliance is provided with a fan powered flue outlet with an annular co-axial combustion air intake that can be rotated – horizontally – through 360 degrees for various horizontal or vertical applications. The Easi-Heat Plus C can also be used with the Vokèra twin flue system.

The Easi-Heat Plus C is approved for use with C13 & C33 type flue applications.

These appliances are designed for use with a sealed system only; consequently they are not intended for use on open vented systems.

This booklet is an integral part of the appliance. It is therefore necessary to ensure that the booklet is handed to the person responsible for the property in which the appliance is located/installed. A replacement copy can be obtained from Vokèra customer services.

When the product reaches the end of its life it should not be disposed of as solid urban waste but should be brought to a separated waste collection facility.

Easi-Heat Plus C boiler complies with basic requirements of the following Directives:

- Gas directive 2009/142/EC;
- Yield directive: Article 7(2) and Annex III of directive92/42/EEC;
- Electromagnetic compatibility directive 2004/108/EC;
- Low-voltage directive 2006/95/EC;
- Directive 2009/125/EC Ecodesign for energy-using appliances;
- Directive 2010/30/EU Indication by labelling of the consumption of energy by energy-related products;
- Delegated Regulation (EU) No. 811/2013;
- Delegated Regulation (EU) No. 813/2013;
- Delegated Regulation (EU) No. 814/2013.

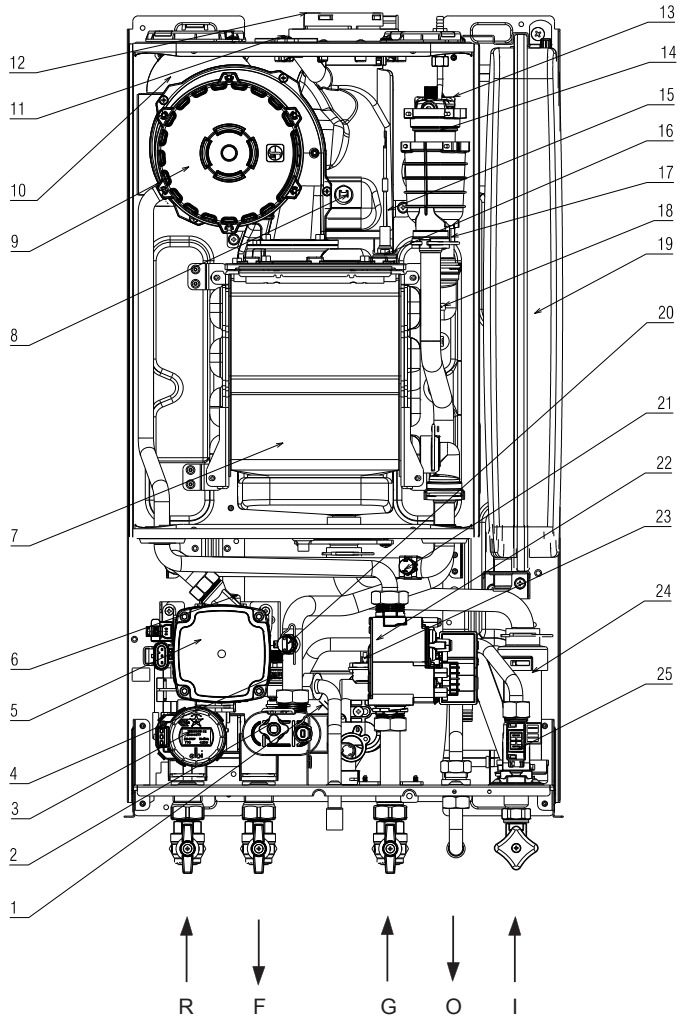

General layout

1 Domestic hot water heat exchanger
2 Drain valve
3 Three porte valve actuator
4 Safety valve
5 Pump
6 Bottom auto air vent (AAV)
7 Main heat exchanger
8 Flues thermistor (NTC)
9 Fan assembly with mixer
10 Silencer
11 Flue gas analysis test point
12 Flue outlet & air intake
13 Ignition transformer
14 Top AAV+De-aerator
15 Spark Electrode
16 Sensing Electrode
17 Flow thermistor (NTC)
18 High limit thermostat
19 Expansion vessel
20 Pressure switch
21 Return thermistor (NTC)
22 Gas valve
23 Domestic hot water sensor
24 Condense trap
25 DHW flow switch

R Heating return connection
F Heating flow connection
G Gas connection
O Hot water outlet
I Cold water inlet

Fig. 4

SECTION 1 - DESIGN PRINCIPLES AND OPERATING SEQUENCE

1.1 PRINCIPLE COMPONENTS

- A fully integrated electronic control board featuring electronic temperature control, anti-cycle control, pump over-run, self-diagnostic fault indicator, full air/gas modulation.
- Aluminium heat exchanger.
- Electronic ignition with flame supervision.
- Integral high-head pump.
- Fan.
- Expansion vessel.
- Water pressure switch.
- Flue sensor.
- Pressure gauge.
- Safety valve.

1.2 MODE OF OPERATION (at rest)

When the appliance is at rest and there are no requests for heating or hot water, the following functions are active:

- frost-protection system – the frost-protection system protects the appliance against the risk of frost damage both for CH and DHW. For CH line, if the main temperature falls to 5 °C, the appliance will function on minimum power until the temperature on main reaches 35 °C.
  Moreover if the DHW temperature falls to 5 °C, the appliance will function on minimum power until the temperature on main reaches 55 °C.
- anti-block function – the anti-block function enables the pump and divertor valve actuator to be energised for short periods, when the appliance has been inactive for more than 24-hours.

1.3 MODE OF OPERATION (Heating)

When there is a request for heat via the time clock and/or any external control, the pump and fan are started, the fan speed will modulate until the correct signal voltage is received at the control PCB. At this point an ignition sequence is enabled.
Ignition is sensed by the electronic circuit to ensure flame stability at the burner. Once successful ignition has been achieved, the electronic circuitry increases the gas rate to 75% for a period of 15 minutes. Thereafter, the boiler's output will either be increase to maximum or modulate to suit the set requirement. When the appliance reaches the desired temperature the burner will shut down and the boiler will perform a three-minute anti-cycle (timer delay).
When the request for heat has been satisfied the appliance pump and fan may continue to operate to dissipate any residual heat within the appliance.

1.4 MODE OF OPERATION (Hot water)

When there is a request for DHW via a hot water outlet or tap, the pump and fan are started, the fan speed will modulate until the correct signal voltage is received at the control PCB. At this point an ignition sequence is enabled.
Ignition is sensed by the electronic circuit to ensure flame stability at the burner. Once successful ignition has been achieved, the electronic circuitry increases the gas rate to maximum or will modulate output to stabilise the temperature.
In the event of the appliance exceeding the desired temperature (set point) the burner will shut down until the temperature drops.
When the request for DHW has been satisfied the appliance pump and fan may continue to operate to dissipate any residual heat within the appliance.

1.5 SAFETY DEVICES

When the appliance is in use, safe operation is ensured by:

- a water pressure switch that monitors system water pressure and will de-activate the pump, fan, and burner should the system water pressure drop below the rated tolerance;
- fan speed sensor to ensure safe operation of the burner;
- a high limit thermostat that over-rides the temperature control circuit to prevent or interrupt the operation of the burner;
- flame sensor that will shut down the burner when no flame signal is detected;
- flue sensor;
- a safety valve which releases excess pressure from the primary circuit.

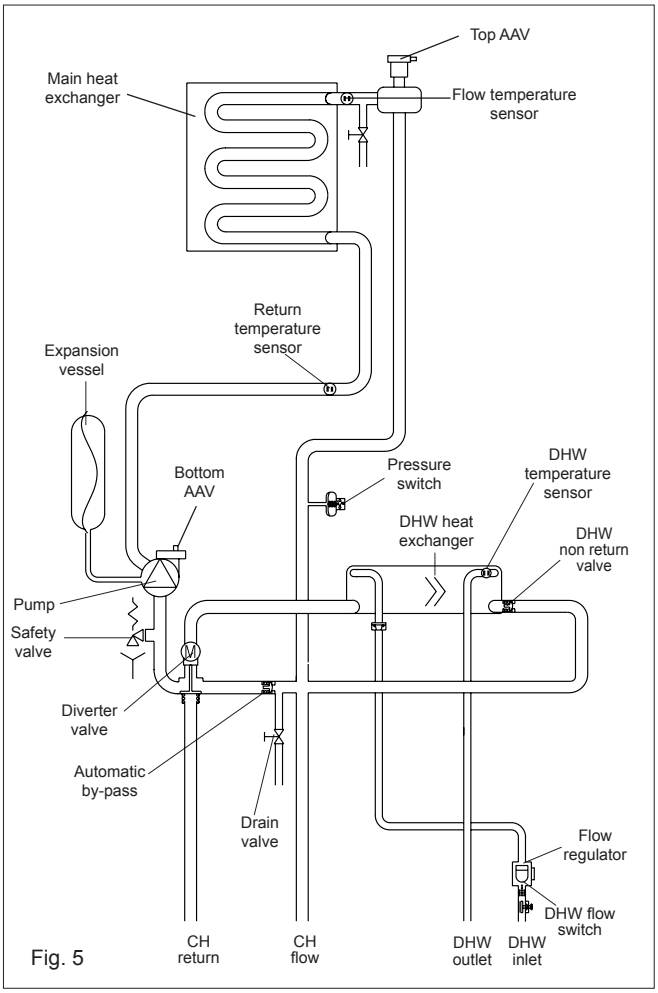

Fig. 5

SECTION 2 - TECHNICAL DATA

2.1 Central Heating	Easi-Heat Plus 25C	Easi-Heat Plus 29C
Heat input (kW)	20.00	25.00
Maximum heat output (kW) 60/80°C	19.50	24.45
Minimum heat output (kW) 60/80°C	4.91	5.90
Maximum heat output (kW) 30/50°C	20.84	26.23
Minimum heat output (kW) 30/50°C	5.36	6.40
Minimum working pressure	0.25-0.45 bar	
Maximum working pressure	2.5 bar	
Minimum flow rate	297 mbar	
2.2 Domestic Hot Water	**Easi-Heat Plus 25C**	**Easi-Heat Plus 29C**
Heat input (kW)	25.00	29.00
Flow Rate: ΔT35°C	10.2 l/min	11.9 l/min
Maximum inlet pressure	6 bar	
Minimum inlet pressure	0.15 bar	
Minimum flow rate	2 l/min	
2.3 Gas Pressures	**Easi-Heat Plus 25C**	**Easi-Heat Plus 29C**
Inlet pressure (G20)	20.0 mbar	20.0 mbar
Heating maximum gas rate (m^3/hr)	2.12	2.64
DHW maximum gas rate (m^3/hr)	2.64	3.07
Minimum gas rate (m^3/hr)	0.53	0.63
Injector size (mm)	4.8	5.1
Silencer flange (ø mm) (fitted)	31	-
2.4 Expansion Vessel	**Easi-Heat Plus 25C**	**Easi-Heat Plus 29C**
Capacity	8 litres	
Maximum system volume	74 litres	
Pre-charge pressure	1 bar	
2.5 Dimensions	**Easi-Heat Plus 25C**	**Easi-Heat Plus 29C**
Height (mm)	792	
Width (mm)	405	
Depth (mm)	253	
Dry weight (kg)	27	30
2.6 Clearances	**Easi-Heat Plus 25C**	**Easi-Heat Plus 29C**
Sides	12mm	
Top	150mm from casing or 25mm above flue elbow (whichever is applicable)	
Bottom	150mm	
Front	600mm	
2.7 Connections	**Easi-Heat Plus 25C**	**Easi-Heat Plus 29C**
Flow & return	22mm	
Gas	15mm	
DHW hot & cold	15mm	
Safety valve	15mm	
Condense	21mm	
2.8 Electrical	**Easi-Heat Plus 25C**	**Easi-Heat Plus 29C**
Power consumption (Watts)	82	89
Maximum electric power circulator (1000 l/h)	39	39
Voltage (V/Hz)	230/50	
Internal fuse	3.15A T (for PCB) - 3.15A F (for connections block)	
External fuse	3A	
2.9 Flue Details (concentric 60-100)	**Easi-Heat Plus 25C**	**Easi-Heat Plus 29C**
Maximum horizontal flue length (60/100mm)	5.85m	4.85m
Maximum vertical flue length (60/100mm)	6.85m	5.85m
2.9A Flue Details (concentric 80-125)	**Easi-Heat Plus 25C**	**Easi-Heat Plus 29C**
Maximum horizontal flue length (80/125mm)	15.3m	12.8m
Maximum vertical flue length (80/125mm)	20.3m	17.8m
2.10 Efficiency	**Easi-Heat Plus 25C**	**Easi-Heat Plus 29C**
SEDBUK (%)	90.0	90.2
2.11 Emissions	**Easi-Heat Plus C 25**	**Easi-Heat Plus 29C**
CO_2 @ maximum output (%)	9.0	9.0
CO_2 @ minimum output (%)	9.5	9.5
CO @ maximum output (ppm)	180	160
CO @ minimum output (ppm)	20	20
NOx rating	class 5	class 5

Easi-Heat Plus 25C

Seasonal space heating energy efficiency class		A			Water heating energy efficiency class		A	
Parameter	**Symbol**	**Value**	**Unit**		**Parameter**	**Symbol**	**Value**	**Unit**
Rated heat output	Prated	20	kW		Seasonal space heating energy efficiency	ηs	93	%
For boiler space heaters and boiler combination heaters: useful heat output					**For boiler space heaters and boiler combination heaters: useful efficiency**			
At rated heat output and high-temperature regime (*)	P4	19.5	kW		At rated heat output and high-temperature regime (*)	η4	88.1	%
At 30% of rated heat output and low-temperature regime (**)	P1	6.5	kW		At 30% of rated heat output and low-temperature regime (**)	η1	98.1	%
Auxiliary electricity consumption					**Other parameters**			
At full load	elmax	29.0	W		Stand-by heat loss	Pstby	40.0	W
At part load	elmin	12.6	W		Pilot flame energy consumption	Pign	-	W
In Stand-by mode	PSB	5.6	W		Annual energy consumption	QHE	38	GJ
					Sound power level, indoors	LWA	53	dB
					Emissions of nitrogen oxides	NOx	19	mg/kWh
For combination heaters:								
Declared load profile	XL				Water heating energy efficiency	ηwh	85	%
Daily electricity consumption	Qelec	0.183	kWh		Daily fuel consumption	Qfuel	22.920	kWh
Annual electricity consumption	AEC	40	kWh		Annual fuel consumption	AFC	17	GJ

(*) High-temperature regime means 60 °C return temperature at heater inlet and 80 °C feed temperature at heater outlet.

(**) Low temperature means for condensing boilers 30 °C, for low-temperature boilers 37 °C and for other heaters 50 °C return temperature (at heater inlet).

Easi-Heat Plus 29C

Seasonal space heating energy efficiency class		A			Water heating energy efficiency class		A	
Parameter	**Symbol**	**Value**	**Unit**		**Parameter**	**Symbol**	**Value**	**Unit**
Rated heat output	Prated	24	kW		Seasonal space heating energy efficiency	ηs	93	%
For boiler space heaters and boiler combination heaters: useful heat output					**For boiler space heaters and boiler combination heaters: useful efficiency**			
At rated heat output and high-temperature regime (*)	P4	24.5	kW		At rated heat output and high-temperature regime (*)	η4	88.2	%
At 30% of rated heat output and low-temperature regime (**)	P1	8.1	kW		At 30% of rated heat output and low-temperature regime (**)	η1	97.6	%
Auxiliary electricity consumption					**Other parameters**			
At full load	elmax	38.0	W		Stand-by heat loss	Pstby	35.0	W
At part load	elmin	15.3	W		Pilot flame energy consumption	Pign	-	W
In Stand-by mode	PSB	5.6	W		Annual energy consumption	QHE	47	GJ
					Sound power level, indoors	LWA	56	dB
					Emissions of nitrogen oxides	NOx	22	mg/kWh
For combination heaters:								
Declared load profile	XL				Water heating energy efficiency	ηwh	84	%
Daily electricity consumption	Qelec	0.197	kWh		Daily fuel consumption	Qfuel	23.021	kWh
Annual electricity consumption	AEC	43	kWh		Annual fuel consumption	AFC	17	GJ

(*) High-temperature regime means 60 °C return temperature at heater inlet and 80 °C feed temperature at heater outlet.

(**) Low temperature means for condensing boilers 30 °C, for low-temperature boilers 37 °C and for other heaters 50 °C return temperature (at heater inlet).

2.12 PUMP DUTY

Fig. 6 shows the flow-rate available – after allowing for pressure loss through the appliance – for system requirements. When using this graph, apply only the pressure loss of the system. The graph is based on a 20°C temperature differential.

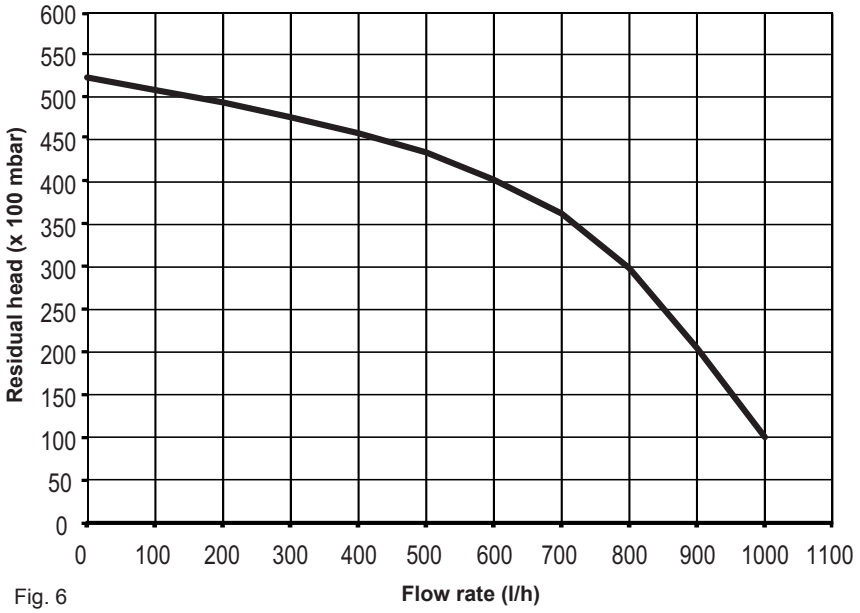

Fig. 6

Fig. 7

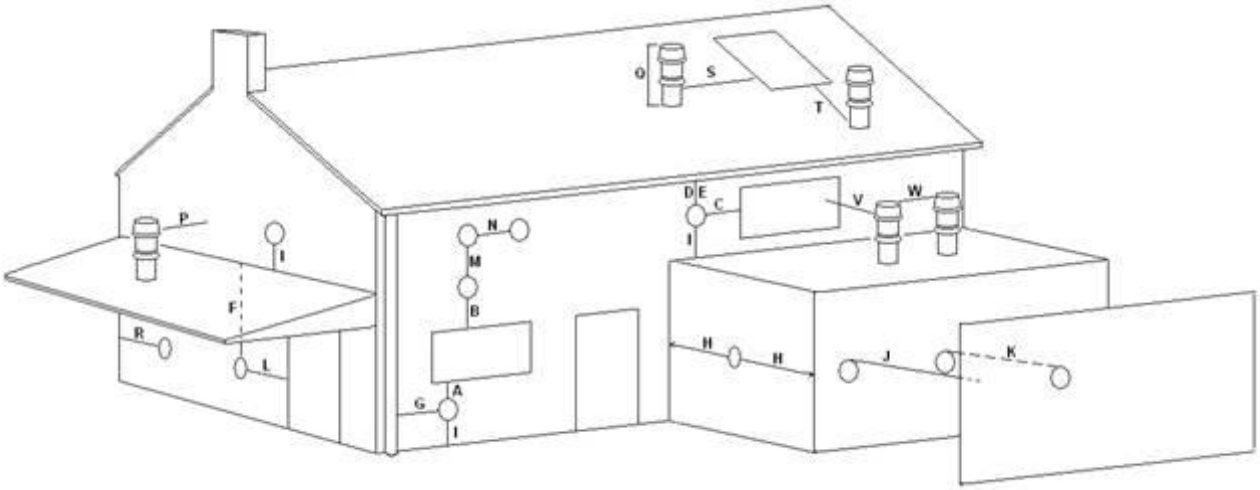

Key	Location	Minimum distance
A	Below an opening (window, air-brick, etc.)	300 mm
B	Above an opening (window, air-brick, etc.)	300 mm
C	To the side of an opening (window, air-brick, etc.)	300 mm
D	Below gutter, drain-pipe, etc.	25 mm
E	Below eaves	25 mm
F	Below balcony, car-port roof, etc.	25 mm
G	To the side of a soil/drain-pipe, etc.	25 mm (60mm for 80/125 - 5” flue)
H	From internal/external corner	25 mm (60mm for 80/125 - 5” flue)
I	Above ground, roof, or balcony level	300 mm
J	From a surface or boundary facing the terminal	600 mm
K	From a terminal facing a terminal	1200 mm
L	From an opening in the car-port into the building	1200 mm
M	Vertically from a terminal on the same wall	1500 mm
N	Horizontally from a terminal on the same wall	300 mm
P	From a structure to the side of the vertical terminal	300 mm
Q	From the top of the vertical terminal to the roof flashing	As determined by the fixed collar of the vertical terminal
R	To the side of a boundary	300 mm
S	To the side of an opening or window on a pitched roof	600 mm
T	Below an opening or window on a pitched roof	2000 mm
V	From a vertical terminal to an adjacent opening (window, air-brick, etc.)	(call Vokera technical for advice)
W	From a vertical terminal to an adjacent vertical terminal	300 mm (only if both terminals are the same hight)

SECTION 3 - GENERAL REQUIREMENTS (UK)

This appliance must be installed by a competent person in accordance with the Gas Safety (Installation & Use) Regulations.

3.1 RELATED DOCUMENTS

The installation of this boiler must be in accordance with the relevant requirements of the Gas Safety (Installation & Use) Regulations, the local building regulations, the current I.E.E. wiring regulations, the bylaws of the local water undertaking, the Building Standards (Scotland) Regulation and Building Standards (Northern Ireland) Regulations.
It should be in accordance also with any relevant requirements of the local authority and the relevant recommendations of the following British Standard Codes of Practice.

3.2 LOCATION OF APPLIANCE

The appliance may be installed in any room or internal space, although particular attention is drawn to the requirements of the current I.E.E. wiring regulations, and in Scotland, the electrical provisions of the Building Regulations, with respect to the installation of the appliance in a room or internal space containing a bath or shower.

BS 5440	**PART 1**	**FLUES**
BS 5440	**PART 2**	**FLUES & VENTILATION**
BS 5449	**PART 1**	**FORCED CIRCULATION HOT WATER SYSTEMS**
BS 5546		**INSTALLATION OF GAS HOT WATER SUPPLIES FOR DOMESTIC PURPOSES**
BS 6798		**INSTALLATION OF BOILERS OF RATED INPUT NOT EXCEEDING 60kW**
BS 6891		**LOW PRESSURE INSTALLATION PIPES**
BS 7074	**PART 1**	**APPLICATION, SELECTION, AND INSTALLTION OF EXPANSION VESSELS AND ANCILLARY EQUIPMENT FOR SEALED WATER SYSTEMS**

When an appliance is installed in a room or internal space containing a bath or shower, the appliance or any control pertaining to it must not be within reach of a person using the bath or shower. The location chosen for the appliance must permit the provision of a safe and satisfactory flue and termination. The location must also permit an adequate air supply for combustion purposes and an adequate space for servicing and air circulation around the appliance. Where the installation of the appliance will be in an unusual location special procedures may be necessary, BS 6798 gives detailed guidance on this aspect. A compartment used to enclose the appliance must be designed and constructed specifically for this purpose. An existing compartment/cupboard may be utilised provided that it is modified to suit. Details of essential features of compartment/cupboard design including airing cupboard installations are given in BS 6798. This appliance is not suitable for external installation.

3.3 GAS SUPPLY

The gas meter – as supplied by the gas supplier – must be checked to ensure that it is of adequate size to deal with the maximum rated input of all the appliances that it serves. Installation pipes must be fitted in accordance with BS 6891.
Pipe work from the meter to the appliance must be of adequate size. Pipes of a smaller size than the appliance gas inlet connection must not be used. The installation must be tested for tightness in accordance with BS6891.
If the gas supply serves more than one appliance, it must be ensured that an adequate supply is maintained to each appliance when they are in use at the same time.

3.4 FLUE SYSTEM

The terminal should be located where the dispersal of combustion products is not impeded and with due regard for the damage and discoloration that may occur to building products located nearby. The terminal must not be located in a place where it is likely to cause a nuisance (see fig. 7). In cold and/or humid weather, water vapour will condense on leaving the terminal; the effect of such pluming must be considered.
If installed less than 2m above a pavement or platform to which people have access (including balconies or flat roofs) the terminal must be protected by a guard of durable material. The guard must be fitted centrally over the terminal. Refer to BS 5440 Part 1, when the terminal is 0.5 metres (or less) below plastic guttering or 1 metre (or less) below painted eaves.

3.5 AIR SUPPLY

The following notes are intended for general guidance only. This appliance is a room-sealed, fan-flued boiler, consequently it does not require a permanent air vent for combustion air supply. When installed in a cupboard or compartment, ventilation for cooling purposes is also not required.

3.6 WATER CIRCULATION

Detailed recommendations are given in BS 5449 Part 1 and BS 6798. The following notes are for general guidance only.

3.6.1 PIPEWORK

It is recommended that copper tubing to BS 2871 Part 1 is used in conjunction with soldered capillary joints. Where possible pipes should have a gradient to ensure air is carried naturally to air release points and that water flows naturally to drain cocks. Except where providing useful heat, pipes should be insulated to avoid heat loss and in particular to avoid the possibility of freezing. Particular attention should be paid to pipes passing through ventilated areas such as under floors, loft space and void areas.

3.6.2 AUTOMATIC BY-PASS

The appliance has a built-in automatic by-pass, consequently there is no requirement for an external by-pass, however the design of the system should be such that it prevents boiler 'cycling'.

3.6.3 DRAIN COCKS

These must be located in accessible positions to facilitate draining of the appliance and all water pipes connected to the appliance. The drain cocks must be manufactured in accordance with BS 2879.

3.6.4 AIR RELEASE POINTS

These must be positioned at the highest points in the system where air is likely to be trapped. They should be used to expel trapped air and allow complete filling of the system.

3.6.5 EXPANSION VESSEL

The appliance has an integral expansion vessel to accommodate the increased volume of water when the system is heated. It can accept up to 8 litres of expansion from within the system, generally this is sufficient, however if the system has an unusually high water content, it may be necessary to provide additional expansion capacity (see 6.18).

3.6.6 FILLING POINT

A method for initial filling of the system and replacing water lost during servicing etc. directly from the mains supply, must be provided (see fig. 8). This method of filling complies with the current Water Supply (Water Fittings) Regulations 1999 and Water Bylaws 2000 (Scotland). If an alternative location is preferred, it should be connected as detailed in fig. 8.

3.6.7 LOW PRESSURE SEALED SYSTEM

An alternative method of filling the system would be from an independent make-up vessel or tank mounted in a position at least 1 metre above the highest point in the system and at least 5 metres above the boiler (see fig. 9).
The cold feed from the make-up vessel or tank must be fitted with an approved non-return valve and stopcock for isolation purposes. The feed pipe should be connected to the return pipe as close to the boiler as possible.

3.6.8 FREQUENT FILLING

Frequent filling or venting of the system may be indicative of a leak. Care should be taken during the installation of the appliance to ensure all aspects of the system are capable of withstanding pressures up to at least 3 bar.

3.7 ELECTRICAL SUPPLY

The appliance is supplied for operation on 230V @ 50Hz electrical supply; it must be protected with a 3-amp fuse. The method of connection to the mains electricity supply must allow for complete isolation from the supply. The preferred method is by using a double-pole switch with a contact separation of at least 3,5mm (3° high-voltage category). The switch must only supply the appliance and its corresponding controls, i.e. time clock, room thermostat, etc. Alternatively an un-switched shuttered socket with a fused 3-pin plug both complying with BS 1363 is acceptable.

3.8 MOUNTING ON A COMBUSTIBLE SURFACE

If the appliance is to be fitted on a wall of combustible material, There is no requirement to protect the wall.

3.9 TIMBER FRAMED BUILDINGS

If the appliance is to be fitted in a timber framed building, it should be fitted in accordance with the Institute of Gas Engineers publication (IGE/UP/7) 'Guide for Gas Installations in Timber Frame Buildings'.

3.10 INHIBITORS

Vokèra recommend that an inhibitor - suitable for use with aluminium heat exchangers - is used to protect the boiler and system from the effects of corrosion and/or electrolytic action. The inhibitor must be administered in strict accordance with the manufacturers instructions*. *Water treatment of the complete heating system - including the boiler - should be carried out in accordance with BS 7593 and the Domestic Water Treatment Association's (DWTA) code of practice.

3.11 SHOWERS

If the appliance is intended for use with a shower, the shower must be thermostatically controlled and be suitable for use with a combination boiler.

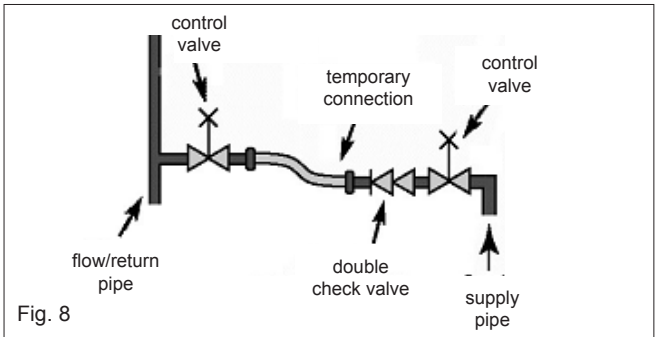

Fig. 8

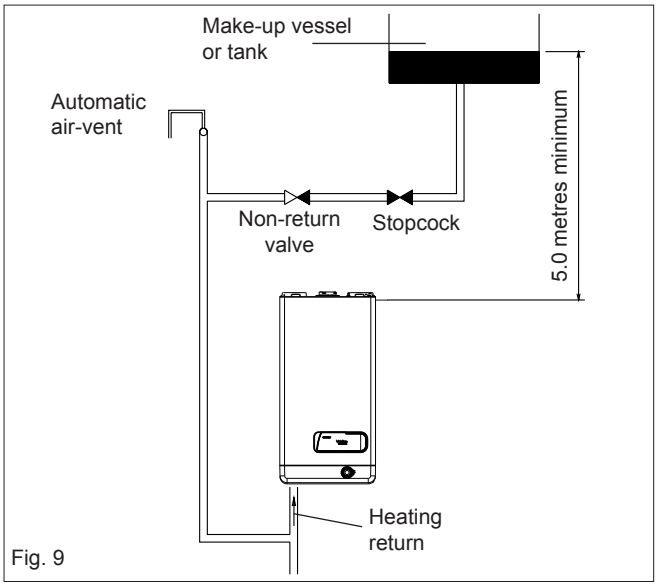

Fig. 9

SECTION 3A - GENERAL REQUIREMENTS (EIRE)

This appliance must be installed by a competent person in accordance with and defined by, the Standard Specification (Domestic Gas Installations) Declaration (I.S. 813).

3A.1 RELATED DOCUMENTS

The installation of this boiler must be in accordance with the relevant requirements of the local building regulations, the current ETCI National Rules for Electrical Installations and the bylaws of the local water undertaking.
It should be in accordance also with any relevant requirements of the local and/or district authority.

3A.2 LOCATION OF APPLIANCE

The appliance may be installed in any room or internal space, although particular attention is drawn to the requirements of the current ETCI National Rules for Electrical Installations, and I.S. 813, Annex K.
When an appliance is installed in a room or internal space containing a bath or shower, the appliance or any control pertaining to it must not be within reach of a person using the bath or shower.
The location chosen for the appliance must permit the provision of a safe and satisfactory flue and termination. The location must also permit an adequate air supply for combustion purposes and an adequate space for servicing and air circulation around the appliance. Where the installation of the appliance will be in an unusual location special procedures may be necessary, refer to I.S. 813 for detailed guidance on this aspect.
A compartment used to enclose the appliance must be designed and constructed specifically for this purpose. An existing compartment/cupboard may be utilised provided that it is modified to suit.
This appliance is not suitable for external installation.

3A.3 GAS SUPPLY

The gas meter – as supplied by the gas supplier – must be checked to ensure that it is of adequate size to deal with the maximum rated input of all the appliances that it serves. Installation pipes must be fitted in accordance with I.S. 813.
Pipe work from the meter to the appliance must be of adequate size. Pipes of a smaller size than the appliance gas inlet connection must not be used. The installation must be tested for tightness in accordance with I.S. 813.
If the gas supply serves more than one appliance, it must be ensured that an adequate supply is maintained to each appliance when they are in use at the same time.

3A.4 FLUE SYSTEM

The terminal should be located where the dispersal of combustion products is not impeded and with due regard for the damage and discoloration that may occur to building products located nearby. The terminal must not be located in a place where it is likely to cause a nuisance (see I.S. 813).
In cold and/or humid weather, water vapour will condense on leaving the terminal; the effect of such pluming must be considered.
If installed less than 2m above a pavement or platform to which people have access (including balconies or flat roofs)

the terminal must be protected by a guard of durable material. The guard must be fitted centrally over the terminal. Refer to I.S. 813, when the terminal is 0.5 metres (or less) below plastic guttering or 1 metre (or less) below painted eaves.

3A.5 AIR SUPPLY

The following notes are intended for general guidance only.
This appliance is a room-sealed, fan-flued boiler, consequently it does not require a permanent air vent for combustion air supply. When installed in a cupboard or compartment, ventilation for cooling purposes is also not required.

3A.6 WATER CIRCULATION

Specific recommendations are given in I.S. 813. The following notes are for general guidance only.

3A.6.1 PIPEWORK

It is recommended that copper tubing be used in conjunction with soldered capillary joints.
Where possible pipes should have a gradient to ensure air is carried naturally to air release points and that water flows naturally to drain cocks.
Except where providing useful heat, pipes should be insulated to avoid heat loss and in particular to avoid the possibility of freezing. Particular attention should be paid to pipes passing through ventilated areas such as under floors, loft space and void areas.

3A.6.2 AUTOMATIC BY-PASS

The appliance has a built-in automatic by-pass, consequently there is no requirement for an external by-pass, however the design of the system should be such that it prevents boiler 'cycling'.

3A.6.3 DRAIN COCKS

These must be located in accessible positions to facilitate draining of the appliance and all water pipes connected to the appliance.

3A.6.4 AIR RELEASE POINTS

These must be positioned at the highest points in the system where air is likely to be trapped. They should be used to expel trapped air and allow complete filling of the system.

3A.6.5 EXPANSION VESSEL

The appliance has an integral expansion vessel to accommodate the increased volume of water when the system is heated. It can accept up to 8 litres of expansion from within the system, generally this is sufficient, however if the system has an unusually high water content, it may be necessary to provide additional expansion capacity (see 6.18).

3A.6.6 FILLING POINT

A method for initial filling of the system and replacing water lost during servicing etc. must be provided (see fig. 8). You should ensure this method of filling complies with the local water authority regulations.

3A.6.7 LOW PRESSURE SEALED SYSTEM

An alternative method of filling the system would be from an independent make-up vessel or tank mounted in a position at least 1 metre above the highest point in the system and at least 5 metres above the boiler (see fig. 9). The cold feed from the make-up vessel or tank must be fitted with an approved non-return valve and stopcock for isolation purposes. The feed pipe should be connected to the return pipe as close to the boiler as possible.

3A.6.8 FREQUENT FILLING

Frequent filling or venting of the system may be indicative of a leak. Care should be taken during the installation of the appliance to ensure all aspects of the system are capable of withstanding pressures up to at least 3 bar.

3A.7 ELECTRICAL SUPPLY

The appliance is supplied for operation on 230V @ 50Hz electrical supply; it must be protected with a 3-amp fuse. The method of connection to the mains electricity supply must allow for complete isolation from the supply. The preferred method is by using a double-pole switch with a contact separation of at least 3,5 mm (3° high-voltage category). The switch must only supply the appliance and its corresponding controls, i.e. time clock, room thermostat, etc.

3A.8 MOUNTING ON A COMBUSTIBLE SURFACE

If the appliance is to be fitted on a wall of combustible material, There is no requirement to protect the wall.

3A.9 TIMBER FRAMED BUILDINGS

If the appliance is to be fitted in a timber framed building, it should be fitted in accordance with I.S. 813 and local Building Regulations.
The Institute of Gas Engineers publication (IGE/UP/7) 'Guide for Gas Installations in Timber Frame Buildings' gives specific advice on this type of installation.

3A.10 INHIBITORS

Vokèra recommend that an inhibitor - suitable for use with aluminium heat exchangers - is used to protect the boiler and system from the effects of corrosion and/or electrolytic action. The inhibitor must be administered in strict accordance with the manufacturers instructions*.
*Water treatment of the complete heating system - including the boiler - should be carried out in accordance with I.S. 813 and the Domestic Water Treatment Association's (DWTA) code of practice.

3A.11 SHOWERS

If the appliance is intended for use with a shower, the shower must be thermostatically controlled and be suitable for use with a combination boiler.

3A.12 DECLARATION OF CONFORMITY

A Declaration of Conformity (as defined in I.S. 813) must be provided on completion of the installation.
A copy of the declaration must be given to the responsible person and also to the gas supplier if required.

SECTION 4 - INSTALLATION

4.1 DELIVERY

Due to the weight of the appliance it may be necessary for two people to lift and attach the appliance to its mounting. The appliance is contained within a heavy-duty cardboard carton. Lay the carton on the floor with the writing the correct way up.

4.2 CONTENTS

Contained within the carton is:

- the boiler
- the wall bracket
- carton template
- an accessories pack containing appliance service connections and washers
- the instruction pack containing the installation, servicing & user instructions, guarantee registration card and a 3-amp fuse.

4.3 UNPACKING

At the top of the carton pull both sides open – do not use a knife – unfold the rest of the carton from around the appliance, carefully remove all protective packaging from the appliance and lay the accessories etc. to one side. Protective gloves should be used to lift the appliance, the appliance back-frame should be used for lifting points.

4.4 PREPARATION FOR MOUNTING THE APPLIANCE

The appliance should be mounted on a smooth, vertical, non-combustible surface, which must be capable of supporting the full weight of the appliance. Care should be exercised when determining the position of the appliance with respect to hidden obstructions such as pipes, cables, etc.
When the position of the appliance has been decided – using the template supplied – carefully mark the position of the wall-mounting bracket (see fig. 10) and flue-hole (if applicable).

4.5 FITTING THE FLUE

The top flue outlet permits both horizontal and vertical flue applications to be considered, alternatively, the Vokèra twin flue system can be utilised if longer flue runs are required.

4.5.1 CONCENTRIC HORIZONTAL FLUE

(For concentric vertical flue, see 4.5.2).
The appliance can be used with either the Vokèra condensing 60/100mm concentric flue system or the optional 80/125mm concentric flue system.

NOTE
These instructions relate **only** to the Vokèra condensing 60/100mm concentric flue system. For specific details on the installation of the 80/125mm concentric flue system please refer to the instructions supplied. The appliance flue outlet elbow can be rotated through 360º on its vertical axis. In addition the flue may be extended from the outlet elbow in the horizontal plane (see 2.9). A reduction must also be made to the maximum length (see table below) when additional bends are used.

Reduction for additional bends

Bend	Reduction in maximum flue length for each bend
45º bend	1.0 metre (60/100) - 1.0 metre (80/125)
90º bend	1.0 metre (60/100) - 1.0 metre (80/125)

Horizontal flue terminals and accessories

Part No.	Description	Length
29450120	Horizontal flue kit	900mm
29450121	Telescopic flue kit	455/630mm
522	Plume management kit	1370mm
29450123	90-degree bend	N/A
29450124	45-degree bends (pair)	N/A
29450125	500mm extension	500mm
29450126	1000mm extension	1000mm
29450127	2000m extension	2000mm
29450128	Telescopic extension	372/519mm
529	Wall bracket pack (5)	208mm

Using the template provided (**A**), mark and drill a 125mm hole for the passage of the flue pipe. The hole should be drilled to ensure any condense fluid that forms, is allowed to drain back to the appliance (see fig. 12). The fixing holes for the wall-mounting bracket should now be drilled and plugged, an appropriate type and quantity of fixing should be used to ensure that the bracket is mounted securely. Once the bracket has been secured to the wall, mount the appliance onto the bracket.

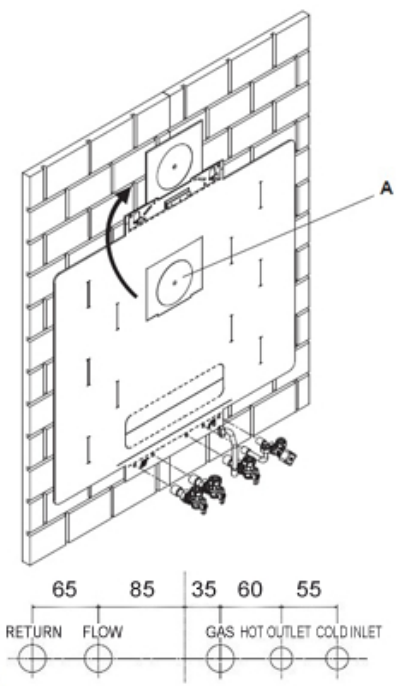

Fig. 10

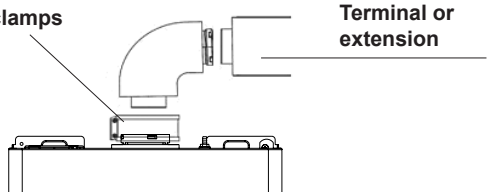

Fig. 11

FITTING THE TELESCOPIC HORIZONTAL FLUE KIT
In some instances It may necessary to cut the inner 60mm pipe of the flue bend at the point indicated (fig.13 pos. A) to allow for easier insertion to the boiler flue spigot.

FITTING THE HORIZONTAL FLUE KIT
Carefully measure the distance from the centre of the appliance flue outlet to the edge of the finished outside wall (dimension X). Add 65mm to dimension X to give you dimension Y (see fig 12). Measure dimension Y from the terminal end of the concentric flue pipe and cut off the excess ensuring any burrs are removed. Pass the concentric flue pipe through the previously drilled hole. Fit the flue bend to the boiler flue outlet and insert the concentric flue pipe into the flue bend ensuring the correct seal is made. Using the clamp, gasket, and screws supplied, secure the flue bend to the appliance flue spigot.

NOTE
Fit the internal (white) trim to the flue assembly prior to connecting the flue pipe to the bend.
You must ensure that the entire flue system is properly supported and connected. Seal the flue assembly to the wall using cement or a suitable alternative that will provide satisfactory weatherproofing. The exterior trim can now be fitted.

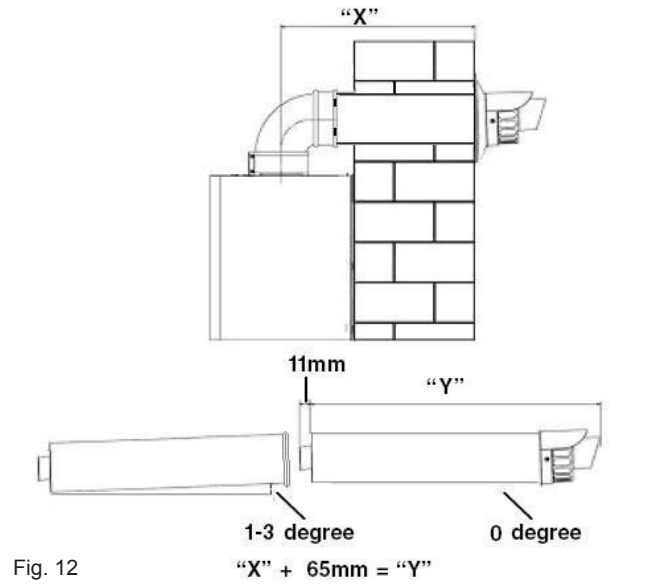

Fig. 12

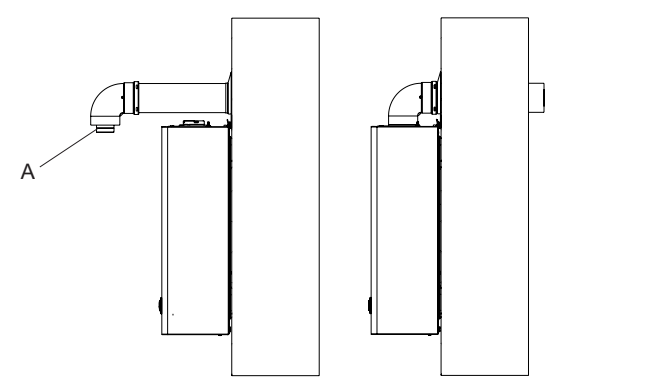

Fig.13

EXTENDING THE FLUE

Connect the bend – supplied with the terminal kit – to the top of the boiler using clamp (supplied) see fig. 11. The additional bends & extensions have push-fit connections, care should be taken to ensure that the correct seal is made when assembling the flue system. Connect the required number of flue extensions or bends (up to the maximum equivalent flue length) to the flue terminal (see fig. 11-15). The flue system should have a minimum of 1º; maximum of 3º rise from the boiler to outside, to ensure any condense fluid that forms, is allowed to drain back to the appliance.

NOTE

When cutting an extension to the required length, you must ensure that the excess is cut from the plain end of the extension (see fig. 11-15). Remove any burrs, and check that all seals are located properly. You must ensure that the entire flue system is properly supported and connected. Seal the flue assembly to the wall using cement or a suitable alternative that will provide satisfactory weatherproofing. The interior and exterior trim can now be fitted.

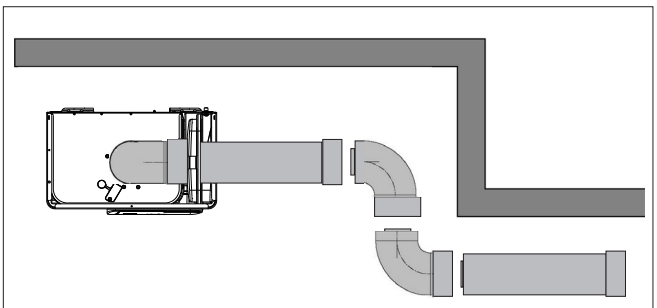
Fig. 14

4.5.2 CONCENTRIC VERTICAL FLUE

The appliance can be used with either the Vokèra condensing 60/100mm concentric flue system or the optional 80/125mm concentric flue system.

NOTE

These instructions relate **only** to the Vokèra condensing 60/100mm concentric flue system. For specific details on the installation of the 80/125mm concentric flue system please refer to the instructions supplied.

The vertical flue terminal can be connected directly to the appliance flue outlet. Alternatively, an extension or bend can be connected to the appliance flue outlet if desired, however if additional bends are fitted, a reduction must be made to the maximum flue length (see table below).

Reduction for bends

Bend	Reduction in maximum flue length for each bend
45º bend	1.0 metre (60/100) - 1.0 metre (80/125)
90º bend	1.0 metre (60/100) - 1.0 metre (80/125)

Vertical flue terminal and accessories

Part No.	Description	Length
29450122	Vertical flue terminal	1000mm
531	Pitched roof flashing plate	N/A
532	Flat roof flashing plate	N/A
29450123	90-degree bend	N/A
29450124	45-degree bends (pair)	N/A
29450125	500mm extension	500mm
29450126	1000mm extension	1000mm
29450127	2000mm extension	2000mm
29450128	Telescopic extension	372/519mm
529	Wall bracket pack (5)	208mm

Using the dimensions given in fig. 12 as a reference, mark and cut a 125mm hole in the ceiling and/or roof.

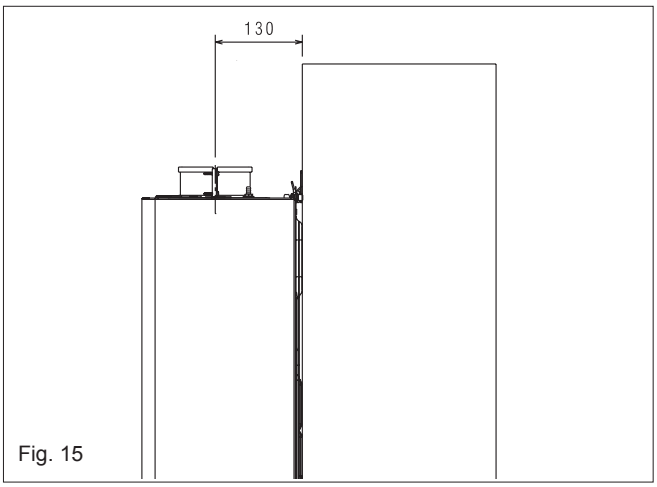

Fig. 15

Fit the appropriate flashing plate to the roof and insert the vertical flue terminal through the flashing plate from the outside, ensuring that the collar on the flue terminal fits over the flashing. The fixing holes for the wall-mounting bracket should now be drilled and plugged, an 'appropriate type and quantity of fixing should be used to ensure that the bracket is mounted securely. Once the bracket has been secured to the wall, mount the appliance onto the bracket.

IMPORTANT

The vertical flue terminal is 1.0 metre in length and cannot be cut; therefore it may be necessary to adjust the height of the appliance to suit or use a suitable extension.

Connect the vertical flue assembly to the boiler flue spigot using the 100mm clip, gasket & screws (supplied), ensuring the correct seal is made. The flue support bracket (supplied with the vertical flue kit) can now be fitted.

If the vertical flue requires extension/s or additional bend/s, connect the required number of flue extensions or bends (up to the maximum equivalent flue length) between the boiler and vertical flue assembly.

Ensure that any horizontal sections of the flue system have a minimum 1º; maximum 3º fall back to the boiler (1º = 17mm per 1000mm).

NOTE
When cutting an extension to the required length, you must ensure that the excess is cut from the plain end of the extension. Remove any burrs, and check that any seals are located properly.
You must ensure that the entire flue system is properly supported and connected.

4.6 CONNECTING THE GAS AND WATER

The appliance is supplied with an accessory pack that includes service valves.
The service valves are for welding. The accessory pack contains sealing washers' etc, for use with the service valves.

NOTE
It will be necessary to hold the valve with one spanner whilst tightening with another

Fig. 16

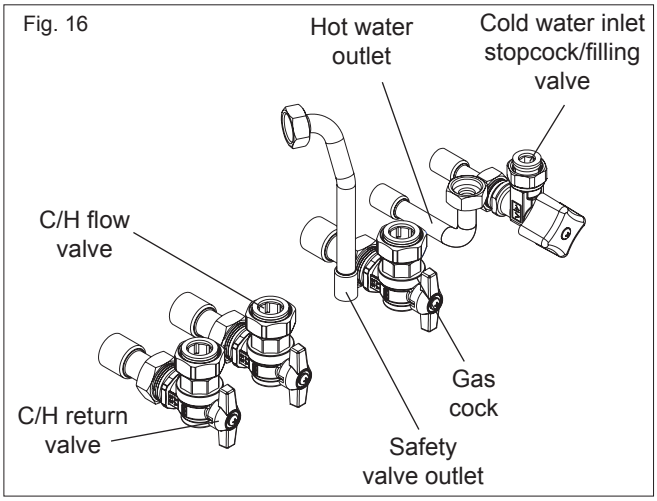

4.6.1 GAS (fig. 16)

The appliance is supplied with a 22mm service valve, connect a 22mm pipe to the inlet of the valve and tighten both nuts.

NOTE
It will be necessary to calculate the diameter of the gas supply pipe to ensure the appliance has an adequate supply of gas.

4.6.2 FLOW & RETURN (fig. 16)

The appliance is supplied with 22mm service valves for the flow and return connections, connect a 22mm pipe to the inlet of each valve and tighten both nuts.

NOTE
Depending on system requirements, it may necessary to increase the size of the flow & return pipe work after the service valve connections.

4.6.3 COLD WATER INLET (fig. 16)

The appliance is supplied with a 15mm combined stopcock, connect a 15mm pipe to the inlet of the stopcock and tighten both nuts.

4.6.4 HOT WATER OUTLET (fig. 16)

The appliance is supplied with a 15mm outlet connection, connect a 15mm pipe to the outlet connection and tighten both nuts.

4.6.5 SAFETY VALVE (fig. 16)

Connect the safety valve connection pipe to the safety valve outlet. Connect a discharge pipe to the other end of the safety valve connection pipe and tighten. The discharge pipe must have a continuous fall away from the appliance to outside and allow any water to drain away thereby eliminating the possibility of freezing. The discharge pipe must terminate in a position where any water – possibly boiling – discharges safely without causing damage or injury, but is still visible.

4.6.6 CONDENSE PIPE

During normal operation the boiler produces condense which is collected in a trap located in the lower part of the boiler. A flexible pipe (condense outlet pipe) is connected to the outlet of the trap. The flexible pipe must be connected to a plastic waste pipe only. The plastic waste pipe must have a minimum of a 3º fall towards the drain. Any external run of pipe should be insulated to prevent the risk of freezing.

4.6.7 CONNECTING THE CONDENSATE OUTLET

Connect the flexible condense outlet pipe supplied in the carton to the condense trap inside the boiler, care should be taken to ensure that the trap connections are not disturbed.
Connect a suitable plastic (not copper) pipe (no less than 20mm diameter) to the outlet pipe and ensure it discharges in accordance with building regulations or other rules in force.

4.7 ELECTRICAL CONNECTIONS

The boiler is supplied with a 2-metre fly-lead. This lead can be used for connection to the electrical supply. Connect the fly-lead to a fused plug or fused isolator in the following way:

- brown wire to LIVE supply
- blue wire to NEUTRAL supply
- green/yellow to EARTH connection.

Insert the supplied 3-AMP fuse into the fused isolator or fused plug.

Should the fly-lead be unsuitable, refer to 4.7.3 for details on how to connect the electrical supply directly to the boiler.

The electrical supply must be as specified in section 3/3A. A qualified electrician should connect the appliance to the electrical supply. If controls - external to the appliance - are required, a competent person must undertake the design of any external electrical circuits, please refer to section 8 for detailed instructions. ANY EXTERNAL CONTROL OR WIRING MUST BE SERVED FROM THE SAME ISOLATOR AS THAT OF THE APPLIANCE. The supply cable from the isolator to the appliance must be 3-core flexible sized 0.75mm to BS 6500 or equivalent. Wiring to the appliance must be rated for operation in contact with surfaces up to 90 ºC.

4.7.1 CASING REMOVAL (fig. 17)

To gain internal access to the appliance you must first remove the casing, proceed as outlined below:

- locate and unscrew the 2-screws (**A**) that secure the outer casing to the appliance
- lift the casing upward to disengage it from the top locating hooks and then remove
- store the casing and screws safely until required. Re-fit in the reverse order
- gently lower the control fascia until it rests.

4.7.2 APPLIANCE TERMINAL BLOCK

The appliance terminal block is located on the rear of the control fascia. Remove the casing as described in 4.7.1. Gently pull the control panel forwards and down. Locate the terminal block cover (fig. 18).

NOTE
The appliance comes with a factory fitted connector plug to allow
Quick and easy connection to the Vokera time clock. If it is anticipated that external controls will be required please refer to the wiring diagrams in section 8 for more detailed information.

4.7.3 CONNECTING THE MAINS (230V) INPUT

Unhook and remove the terminal block cover (230V). Pass the cable through the cable anchorage point. Connect the supply cable wires (LIVE, NEUTRAL, & EARTH) to their corresponding terminals (L, N, & E) on the appliance – high voltage – terminal block. When connecting the EARTH wire, ensure that it's left slightly longer that the others, this will prevent strain on the EARTH wire should the cable become taut. Do not remove the link wire unless additional external controls are to be fitted (see section 8). The securing screw on the cable anchorage should now be tightened. This must be done before the terminal block cover is re-fitted in its position.

NOTE
It is the installer's responsibility to ensure that the appliance is properly Earthed. Vokèra Ltd. cannot be held responsible for any damages or injuries caused as a result of incorrect Earth wiring.

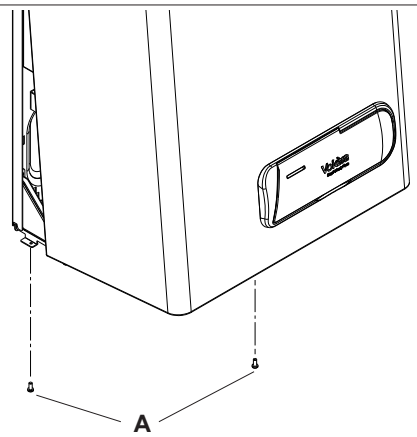

Fig. 17

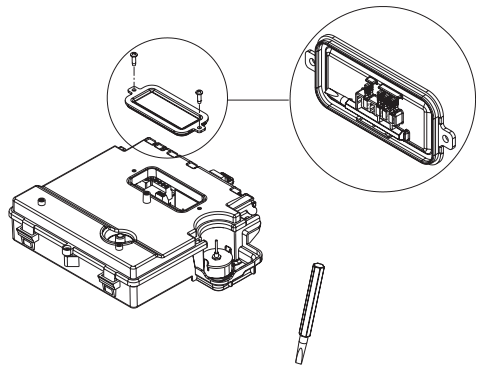
Fig. 18

SECTION 5 - COMMISSIONING

5.1 GAS SUPPLY INSTALLATION

Inspect the entire installation including the gas meter, test for tightness and purge. Refer to BS 6891 (I.S. 813 in ROI) for specific instruction.

5.2 THE HEATING SYSTEM

The appliance contains components that may become damaged or rendered inoperable by oils and/or debris that are residual from the installation of the system, consequently it is essential that the system be flushed in accordance with the following instructions.

5.3 INITIAL FILLING OF THE SYSTEM

Ensure both flow and return service valves are open, remove appliance casing as described in 4.7.1, identify the automatic air release valves (AAV) and loosen the dust cap/s by turning the cap anti-clockwise one full turn. Ensure all manual air release valves located on the heating system are closed. Connect the filling loop as shown in fig. 5, slowly proceed to fill the system by firstly opening the inlet valve connected to the flow pipe, and then turning the lever on the fill valve, to the open position. As water enters the system the pressure gauge will begin to rise. Once the gauge has reached 1 BAR close both valves and begin venting all manual air release valves, starting at the lowest first. It may be necessary to go back and top-up the pressure until the entire system has been filled. Inspect the system for water tightness, rectifying any leaks.

5.3.1 MANUAL AIR RELEASE (fig. 19)

When the boiler has been filled for the first time or the system has been drained and refilled, it will be necessary to release any air that may have become trapped within the appliance heat exchanger. Slacken the bleed screw until water is released and then close.

IMPORTANT, THERE ARE NO OTHER MANUAL AIR RELEASE VALVES LOCATED ON THE APPLIANCE.

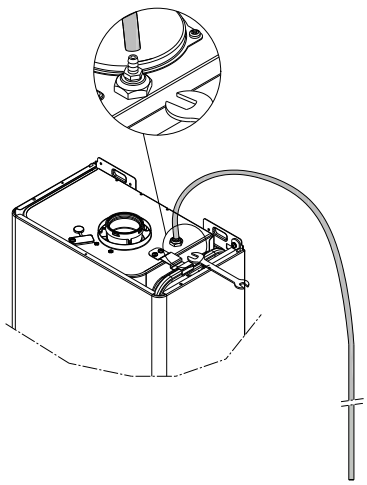
Fig. 19

5.4 INITIAL FLUSHING OF THE SYSTEM

The whole of the heating system must be flushed both cold and hot as detailed in 5.8. Open all radiator or heating valves and the appliance flow & return service valve. Drain the boiler and system from the lowest points. Open the drain valve full bore to remove any installation debris from the boiler prior to lighting. Refill the boiler and heating system as described in 5.3.

5.5 PRE-OPERATION CHECKS

Before attempting the initial lighting of the appliance, the following checks must be carried out:

- ensure all gas service valves from the meter to the appliance are open and the supply pipe has been properly purged;
- ensure the proper electrical checks have been carried out, (see 7.8) particularly continuity, polarity and resistance to earth;
- ensure the 3 AMP fuse – supplied with the appliance – has been fitted;
- ensure the system has been filled, vented and the pressure set to 1 BAR;
- ensure the flue system has been fitted properly and in accordance with the instructions;
- ensure all appliance service valves are open.

5.6 INITIAL LIGHTING

Ensure the electrical supply to the appliance is switched on. Ensure any external controls are switched to an 'ON' position and are calling for heat. Move the selector switch to the ON position, the appliance will now operate as described in 1.2. Should the appliance fail to ignite, refer to 5.6 and/or section 7 (mode of operation, parameter setting & faultfinding).

5.7 CHECKING GAS PRESSURE AND COMBUSTION ANALYSIS

The appliance is factory set so should require no additional adjustment once installed. However to satisfy the requirements of GSIUR 26/9 (I.S. 813 ROI), it will be necessary to gas rate the appliance using the gas meter that serves the appliance and carry out a combustion analysis check in accordance with BS 7967 (UK) to ensure that correct combustion is occurring, see flow chart on page 30.

Additionally, if the gas valve has been adjusted, replaced, or the appliance has been converted for use with another gas type, then it becomes necessary to carry out a combustion analysis check to ensure that correct combustion is occurring. If there are no means to carry out a combustion analysis check, then it will not be possible to complete the commissioning procedure.

Details on how to carry out the combustion analysis can be found in section 7.

IMPORTANT

It's imperative that a sufficient dynamic – gas – pressure is maintained at all times. Should the dynamic gas pressure fall below an acceptable level, the appliance may malfunction or sustain damage.

5.8 FINAL FLUSHING OF THE HEATING SYSTEM

The system shall be flushed in accordance with BS 7593 (I.S. 813 ROI). Should a cleanser be used, it must be suitable for Aluminium heat exchangers. It shall be from a reputable manufacturer and shall be administered in strict accordance with the manufacturers' instructions and the DWTA code of practice.

NOTE

Chemicals used to cleanse the system and/or inhibit corrosion must be pH neutral, i.e. they should ensure that the level of the pH in the system water remains neutral. Premature failure of certain components can occur if the level of pH in the system water is out-with normal levels.

5.8.1 INHIBITORS

See Section 3 "General Requirements".

5.9 SETTING THE FLOW OUTLET TEMPERATURE

The flow outlet temperature can be adjusted between 40 °C - 80 °C for standard CH system by using the Heating thermostat knob (see fig.1).

5.9.1 SETTING THE DHW OUTLET TEMPERATURE

The DHW outlet temperature can be adjusted between 37 °C - 60 °C via the DHW thermostat knob (see fig.1).

5.10 SETTING THE SYSTEM DESIGN PRESSURE

The design pressure should be a minimum of 0.5 BAR and a maximum of 1.5 BAR. The actual reading should ideally be 1 BAR plus the equivalent height in metres (0.1 BAR = 1 metre) to the highest point in the system above the base of the appliance (up to the maximum of 1.5 BAR total). **N.B.** The safety valve is set to lift at 3 BAR/30 metres/45 psig. To lower the system pressure to the required value, drain off some water from the appliance drain valve until the required figure registers on the pressure gauge (see fig. 1).

5.11 REGULATING THE CENTRAL HEATING SYSTEM

Fully open all radiator and circuit valves and run the appliance for both heating and hot water until heated water is circulating. If conditions are warm remove any thermostatic heads. Adjust radiator return valves and any branch circuit return valves until the individual return temperatures are correct and are approximately equal.

5.11.1 REGULATING THE DHW FLOW-RATE

The appliance is fitted with a flow rate restrictor that limits the maximum flow rate that can be drawn through the appliance. The restrictor eliminates the need to manually adjust the DHW flow rate. However if it is felt necessary to further increase or decrease the available flow rate, spare restrictors are available to Vokèra spare parts.

The spare flow rate restrictors can be fitted to either increase or decrease the maximum flow rate.

5.11.2 FLOW-RATE RESTRICTOR

The boiler is supplied with the following flow restrictor.
Easi-Heat Plus 25C: 8 - litres flow restrictor
Easi-Heat Plus 29C: 10 - litres flow restrictor.

5.12 FINAL CHECKS

- ENSURE ALL TEST NIPPLES ON THE APPLIANCE GAS VALVE ARE TIGHT AND CHECKED FOR TIGHTNESS.
- ENSURE THE APPLIANCE FLUE SYSTEM IS FITTED CORRECTLY AND IS PROPERLY SECURED.
- ENSURE ALL PIPE WORK IS RE-CHECKED FOR TIGHTNESS.
- RE-FIT APPLIANCE CASING.
- COMPLETE BENCHMARK CHECKLIST.

FOR UK ONLY

Complete details of the boiler, controls, installation and commissioning in the Benchmark checklist at the back of this book. It is important that the Benchmark checklist is correctly completed and handed to the user. Failure to install and commission the appliance to the manufacturers instructions will invalidate the warranty.

5.13 INSTRUCTING THE USER

Hand over all documentation supplied with this appliance – including these instructions – and explain the importance of keeping them in a safe place.
Explain to the user how to isolate the appliance from the gas, water and electricity supplies and the locations of all drain points. Show the user how to operate the appliance and any associated controls correctly.
Show the user the location of the filling valve and how to top-up the system pressure correctly and show the location of all manual air release points.
Explain to the user how to turn off the appliance for both long and short periods and advise on the necessary precautions to prevent frost damage.
Explain to the user that for continued safe and efficient operation, the appliance must be serviced annually by a competent person.

IMPORTANT

To validate the appliance warranty, it's necessary to register the appliance details with us. The warranty can be registered in several ways:

- by completing the warranty registration card and posting to us using the envelope supplied
- online at: vokera.co.uk
- for UK residents by calling: 0870 607 0281
- for ROI residents by calling: 056 6655057.

SECTION 6 - SERVICING INSTRUCTIONS

6.1 GENERAL

Once the appliance has been serviced, the benchmark Service Record must be completed.

For UK only: It is important that the Benchmark Service Record is correctly completed and handed to the user. Failure to install and commission the appliance to the manufacturers instructions will invalidate the warranty.

To ensure the continued safe and efficient operation of the appliance, it is recommended that it is checked and serviced at regular intervals. To ensure correct and safe operation of the appliance, it is essential that any worn or failed component be replaced only with a **genuine Vokèra spare part**. It should be remembered that although certain generic components may look similar, they will be specific to an individual appliance or product range. Use of non-genuine Vokèra spare parts could invalidate your warranty and may pose a potential safety hazard. The frequency of servicing will depend upon the particular installation conditions, but in general, once per year should be sufficient. It is the law that any servicing work is carried out by competent person such as a Vokèra engineer, an approved service agent, British Gas, GAS SAFE registered personnel or other suitably qualified personnel. The following instructions apply to the appliance and its controls, but it should be remembered that the central heating and the domestic hot water systems would also require attention from time to time.

6.2 ROUTINE ANNUAL SERVICING

- Check the operation of the appliance and ensure it functions as described in section 7.
- Compare the performance of the appliance with its design specification. The cause of any noticeable deterioration should be identified and rectified without delay.
- Thoroughly inspect the appliance for signs of damage or deterioration especially the flue system and the electrical apparatus.
- Check and adjust – if necessary – all burner pressure settings (see 7.3).
- Check and adjust – if necessary – the system design pressure (see 5.10).
- Carry out an analysis of the flue gases (see 7.4), and visually check the condition of the entire flue assembly.
- Compare the results with the appliance design specification. Any deterioration in performance must be identified and rectified without delay.
- Check that the main heat exchanger are clean and free from any debris or obstruction.
- Check and clean – if necessary – the condense trap to ensure correct operation.

The flame side of the burner is made of state-of-the-art material. Being fragile:
- be particularly careful when handling, mounting or dismantling the burner and adjacent components (e.g. electrodes, insulation panelling etc.)
- avoid direct contact with any cleaning appliance (e.g. brushes, aspirators, blowers, etc.).

This component does not need any maintenance, please do not remove it from its housing, save where the O-ring may have to be replaced.
The manufacturer declines all responsibility in cases of damages due to failing to observe the above.

6.3 REPLACEMENT OF COMPONENTS

Although it is anticipated that this appliance will give years of reliable, trouble free service, the life span of components will be determined by factors such as operating conditions and usage. Should the appliance develop a fault, the fault finding section will assist in determining which component is malfunctioning.

6.4 COMPONENT REMOVAL PROCEDURE

To remove a component, access to the interior of the appliance is essential. Isolate the appliance from the electrical supply and remove the fuse. And when necessary, close all service valves on the appliance, remove the appliance casing as described in section 4.7.1 and drain the water content from the appliance via the drain valve. Ensure some water absorbent cloths are available to catch any residual water that may drip from the appliance or removed component. Undertake a complete commissioning check as detailed in section 5, after replacing any component. **ALWAYS TEST FOR GAS TIGHTNESS IF ANY GAS CARRYING COMPONENTS HAVE BEEN REMOVED OR DISTURBED.**

6.4.1 AIR BOX FRONT COVER REMOVAL (fig. 20)

Locate the 4 screws and remove air box front cover.

6.5 PUMP ASSEMBLY (fig. 21)

Carry out component removal procedure as described in 6.4. Disconnect and remove the pump outlet pipe (**A**) from the pump assembly/combustion chamber connection.
Remove the expansion pipe locking pin (**B**) from the top of the pump assembly and withdraw the flexible pipe. Locate and remove the pressure gauge securing pin (**C**) and disconnect the pressure gauge from the pump assembly. Disconnect the electrical wiring from the pump's electrical connection point (**D**). Locate and remove the 2 securing screws (**E**) at the rear of the pump assembly. Remove locking pin (**F**) from pump base and lift pump assembly clear of the hydraulic manifold. The pump assembly can now be removed from the appliance. Replace carefully in the reverse order.

6.6 SAFETY VALVE (fig. 22)

Carry out component removal procedure as described in 6.4. Disconnect the outlet pipe (**G**) from the safety valve, remove safety valve locking pin (**H**) from the hydraulic manifold. Replace in the reverse order.

6.7 LOWER AUTOMATIC AIR RELEASE VALVE (fig. 21)

Carry out component removal procedure as described in 6.4. Remove the expansion pipe locking pin (**B**) from the pump assembly and remove the expansion pipe. Locate and remove the AAV locking pin (**I**) from the pump assembly and remove the AAV assembly (**J**). Replace in the reverse order.

6.7.1 TOP AUTOMATIC AIR RELEASE VALVE (fig. 23)

Carry out component removal procedure as described in 6.4. Remove the AAV locking pin (**K**) from the deaerator assembly and remove the AAV assembly (**L**). Replace in the reverse order.

6.8 WATER PRESSURE SWITCH (fig. 24)

Carry out component removal procedure as described in 6.4. Locate and remove the locking pin (**M**) from the water pressure switch (**N**). Remove the wiring. Carefully withdraw the switch. Replace in the reverse order.

6.9 FLOW THERMISTOR (fig. 4 - pos. 17)

Carry out component removal procedure as described in 6.4. Unclip and remove the air chamber front cover. Unclip the flow thermistor from the flow outlet pipe. Disconnect thermistor electrical plug. Replace in the reverse order.

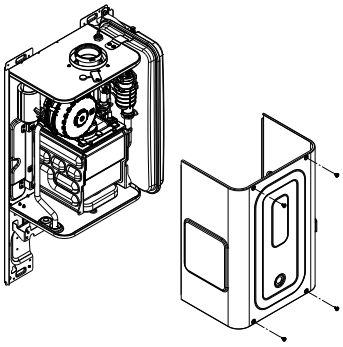

Fig. 20

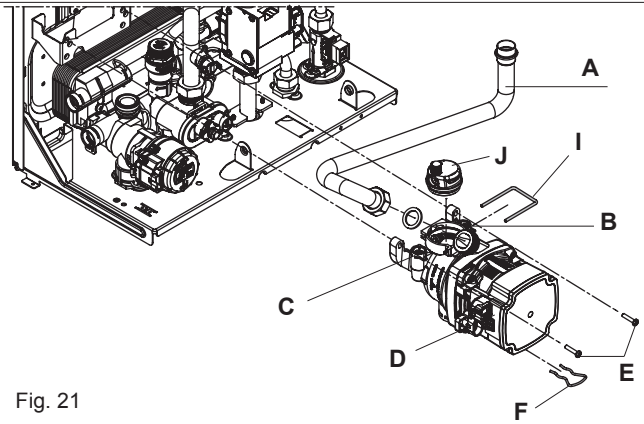

Fig. 21

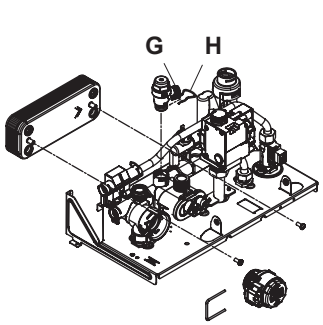

Fig. 22

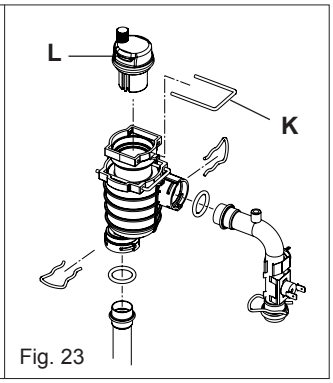

Fig. 23

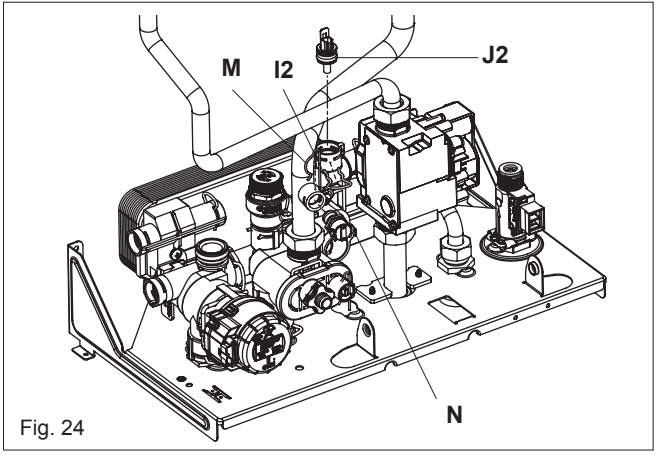

Fig. 24

6.10 RETURN THERMISTOR (fig. 4 - pos. 21)

Carry out component removal procedure as described in 6.4. Unclip and remove the air chamber front cover. Unclip the return thermistor from the return inlet pipe. Disconnect thermistor electrical plug. Replace in the reverse order.

6.11 PRINTED CIRCUIT BOARD (fig. 25)

Carry out component removal procedure as described in 6.4. Pull the control fascia forward and lower it. Push the clips (**O**) which secure the PCB cover, remove cover, after carefully taking note of all wiring connections and jumper tag configuration. Unhook and remove connection block (**P**). Disconnect all wiring from the PCB, locate and remove the PCB securing screws, remove the required PCB. Replace in the reverse order ensuring that the position of the 2 control knobs are correctly aligned with the respective potentiometers on the PCB.
Ensure that the correct jumper tag configuration has been respected. It will be necessary to check the functioning of the PCB is set for the correct boiler type/application.

6.12 GAS VALVE (fig. 26)

Carry out component removal procedure as described in 6.4. The gas valve must be changed as complete unit. Disconnect the electrical plug and leads from the gas valve, slacken and unscrew gas valve inlet and outlet connections. **Please note,** the sealing washers (**Q**) must be discarded and replaced with new sealing washers. Disconnect the compensation pipe (**R**). Unscrew gas pipe connections (**S-T**), the gas valve can now be removed. Replace in the reverse order. Check and adjust burner pressure settings.
WARNING, A GAS TIGHTNESS CHECK MUST BE CARRIED OUT.

6.12.1 INJECTOR (fig. 26)

Carry out component removal procedure as described in 6.4. Unscrew and remove gas pipe connections (**S-T**). Locate and remove the injector (**U**) inside the valve. Replace in the reverse order. Check and adjust burner pressure settings.
WARNING, A GAS TIGHTNESS CHECK MUST BE CARRIED OUT.

6.13 ELECTRODES (fig. 27)

Carry out component removal procedure as described in 6.4. Remove the air chamber front cover. Disconnect the electrode leads and ancillary wiring from their respective connectors. Remove the retaining screws (**V**) for electrode. Remove the spark ignition electrode (**W**). Remove the flame sensor electrod (**Y**).

6.14 FLUE FAN & MIXER (fig. 28-29)

Carry out component removal procedure as described in 6.4. Remove the air chamber front cover. Locate and remove the gas pipe locking pin (**A1**) and swing/rotate the gas pipe away from the fan assembly (**B1**), (if necessary unscrew the gas pipe from the gas valve **G1**). Locate and slacken the silencer (**H1**). Locate and remove the sense electrode. To remove the fan (**E1**), disconnect the electrical connections attached to the fan, locate and remove the four screws (**F1**). Gently ease the fan from its location. Replace in the reverse order. Ensure all seals are in good condition, taking care to ensure they are replaced correctly.

6.15 BURNER (fig. 28-29)

Carry out component removal procedure as described in 6.4. Remove the air chamber front cover. Locate and remove the gas pipe locking pin (**A1**) and swing/rotate the gas pipe away from the fan assembly (**B1**), (if necessary unscrew the gas pipe from the gas valve **G1**). Locate and slacken the silencer (**H1**), disconnect the electrical connections attached to the fan. Disconnect the electrode leads and ancillary wiring from their respective connectors. Locate and remove the screws (**I1**) which secure the burner assembly in position to the heat exchanger (**J1**). Gently ease the fan assembly out of its location. Once the assembly has been removed, the burner (**K1**) can be withdrawn from the heat engine. Ensure the seals (**L1**) is in good condition, taking care to ensure it is replaced correctly. Replace in the reverse order.

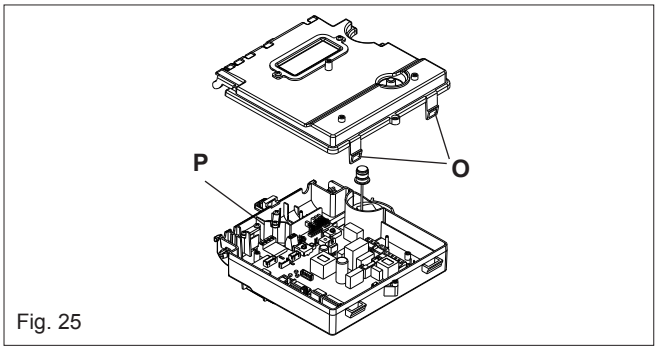

Fig. 25

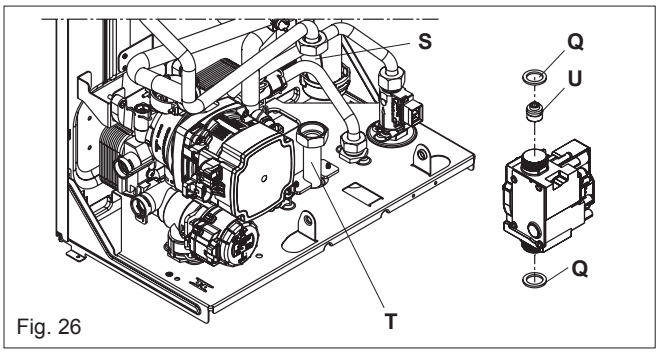

Fig. 26

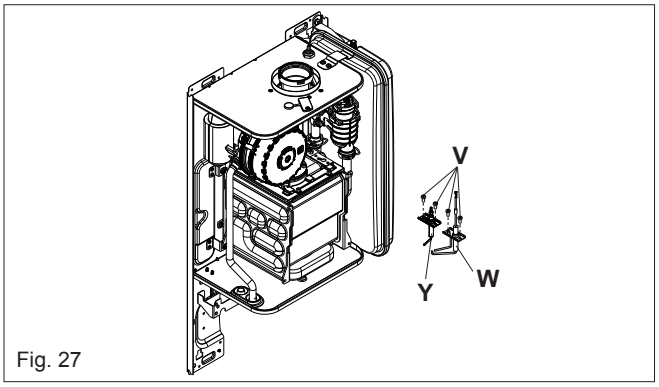

Fig. 27

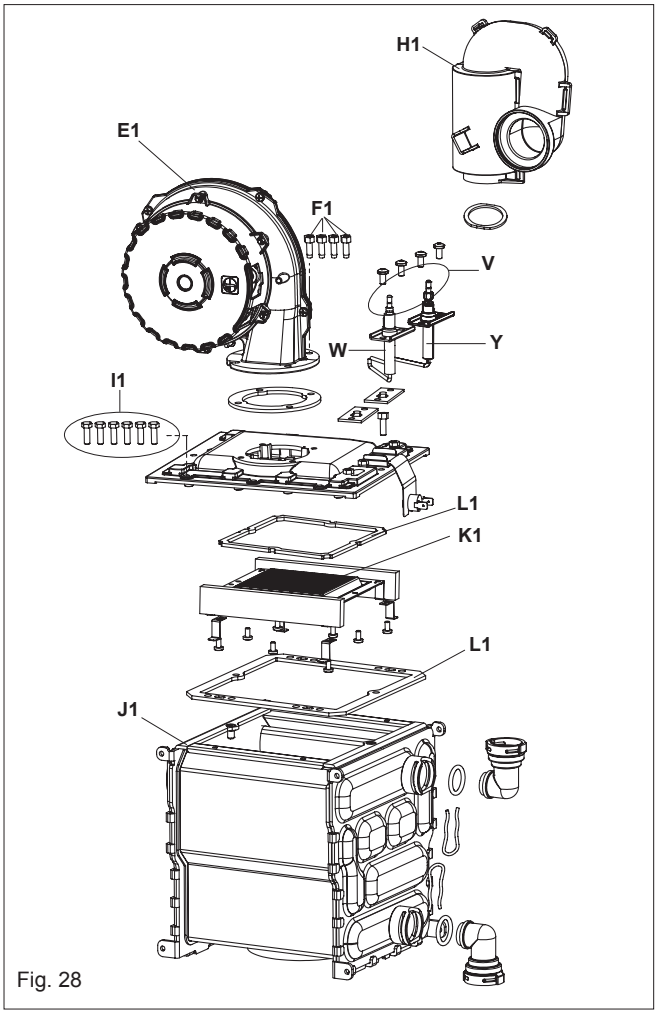

Fig. 28

6.16 MAIN HEAT EXCHANGER (fig. 29)

Carry out component removal procedure as described in 6.4. Remove the air chamber front cover. Locate and remove the gas pipe locking pin (**A1**) and swing/rotate the gas pipe away from the fan assembly (**B1**), (if necessary unscrew the gas pipe from the gas valve). Disconnect the electrical connections attached to the fan. Disconnect the electrode leads and ancillary wiring from their respective connectors.

Disconnect the flow locking pin (**M1**), return locking pin (**N1**) on the heat exchanger. Locate and remove the 4-screws that secure the heat exchanger to the combustion chamber (**O1**). Move the heat exchanger and disconnect it from the flue collector (**P1**). The heat exchanger can now be lifted up and withdrawn from the appliance.

Replace in the reverse order. Ensure all seals are in good condition, taking care to ensure they are replaced correctly.

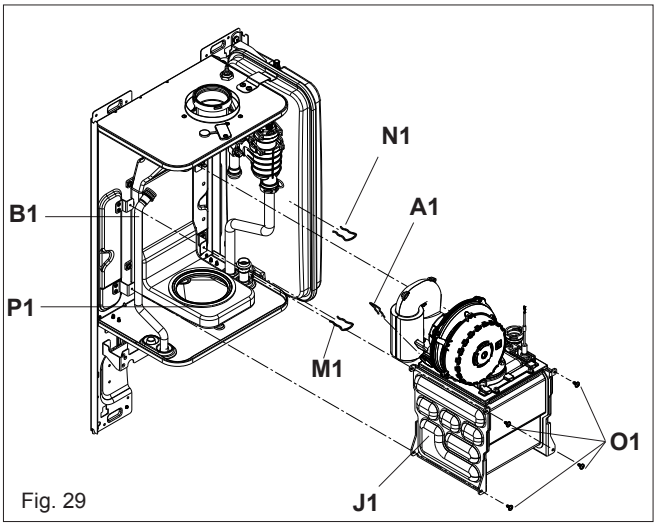

Fig. 29

6.17 AUTOMATIC BY-PASS & DHW NON-RETURN VALVE (fig. 30)

Carry out component removal procedure as described in 6.4. Remove the locking pin (**Q1**) that secures the cover (**R1**) to the hydraulic manifold. Using a hooked piece of wire, carefully withdraw the by-pass cartridge (**S1**) and/or DHW non-return cartridge (**T1**). Ensure all seals are in good condition, taking care to ensure they are replaced correctly. Replace in the reverse order ensuring the cartridge is facing the correct way.

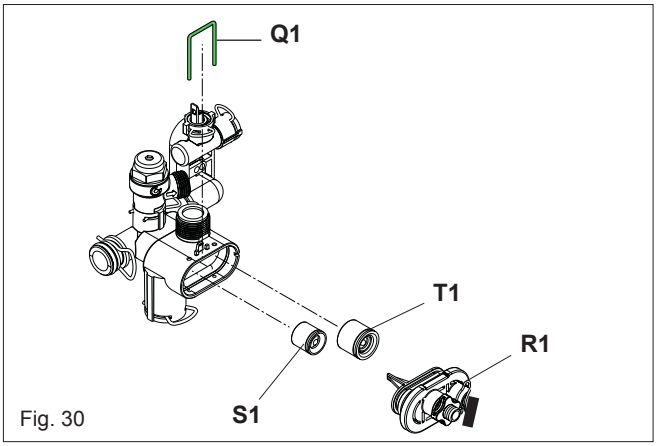

Fig. 30

6.18 EXPANSION VESSEL REMOVAL (fig. 31)

Carry out component removal procedure as described in 6.4. Disconnect the expansion vessel from the flexible expansion pipe. Disconnect the flexible expansion pipe from the vessel. Unscrew the nut that secures the vessel to the lower frame. Locate and remove the screw (**U1**) that secure the vessel to the top. The expansion vessel can now be removed. Replace in the reverse order. Ensure all seals are in good condition, taking care to ensure they are replaced correctly.

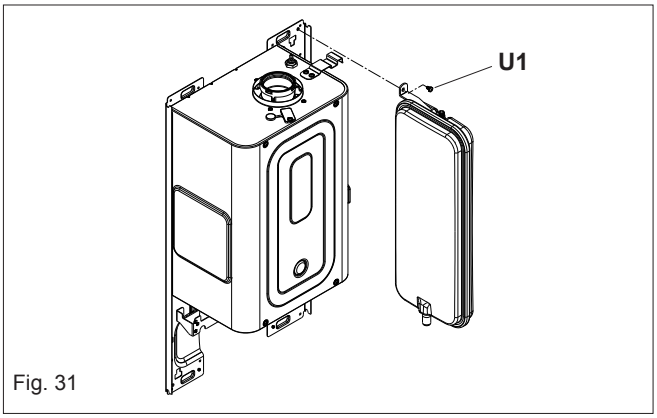

Fig. 31

6.19 CONDENSE TRAP REMOVAL (fig. 32)

Carry out component removal procedure as described in 6.4. Disconnect the the locking pin (**V1**) that secures the trap to the air condense pipe. Disconnect the lower rubber condense pipe from the condense trap. Carefully remove the condense trap. For cleaning unlock the upper and lower closing plug (**W1**). Replace in the reverse order.

NOTE

It is recommended that the syphon is primed with clean water after it has been removed for cleaning or before the appliance is commissioned. To prime the syphon, fill it to approximately 3/4 full before refitting it as detailed.

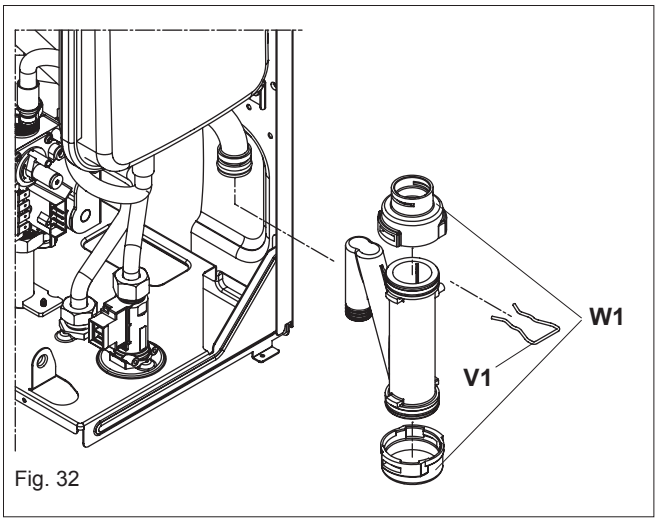

Fig. 32

6.20 FLUE COLLECTOR REMOVAL (fig. 33)

Carry out component removal procedure as described in 6.4. Remove the air chamber front cover. Remove the heat exchanger as per 6.16. Locate and remove the screw (**Y1**) that secures the flue gas analysis test point cover (**Z1**). Disconnect the flues thermistor wiring connections. Locate and remove the 4 screws (**A2**). Locate and remove the 2 screws (**A3**). Gently ease the condensate collector (**A4**) out off its location. Gently ease the flue collector out off its location. Replace in the reverse order.

6.20.1 DHW FLOW RESTRICTOR (fig. 34)

Carry out the component removal procedure as described in 6.4.
Disconnect the cold water inlet pipe at the DHW flow switch (**B2**). Using a small screwdriver, gently ease the flow restrictor (**C2**) from its seating. Replace in the reverse order. Ensure all seals are in good condition, taking care to ensure they are replaced correctly.

6.20.2 DHW FLOW SWITCH (fig. 34)

Carry out component removal procedure as described in 6.4. Remove the locking pin (**D2**). Disconnect and remove the cold water inlet pipe from the DHW flow switch & DHW heat exchanger. Disconnect the wiring to the DHW flow switch. Slacken and unscrew the inlet connection. Unscrew the nut (**E2**). Lift the DHW flow switch housing from its seating. If necessary remove the locking pin (**F2**) from the DHW flow switch, taking care not to lose the float contained within the housing.
Replace in the reverse order ensuring that the housing is firmly inserted onto its seating. Ensure all seals are in good condition, taking care to ensure they are replaced correctly.

6.20.3 VALVE ACTUATOR (fig. 35)

Carry out component removal procedure as described in 6.4. Disconnect the electrical plug from the actuator (**H2**). Replace in the reverse order.

6.20.4 DHW THERMISTOR (fig. 24)

Carry out component removal procedure as described in 6.4. Locate and remove the thermistor locking pin (**I2**). Gently ease the thermistor assembly (**J2**) from the hydraulic manifold. Replace in the reverse order.

6.20.5 DIVERTOR VALVE ASSEMBLY (fig. 35)

Carry out component removal procedure as described in 6.4. Remove the valve actuator as described in 6.20.3. Locate and remove the locking pin (**G2**) that secures the valve housing cover to the hydraulic manifold. Gently prise the valve assembly from the manifold (**K2**). Replace in the reverse order ensuring that the seating assembly is inserted properly. Ensure all seals are in good condition, taking care to ensure they are replaced correctly.

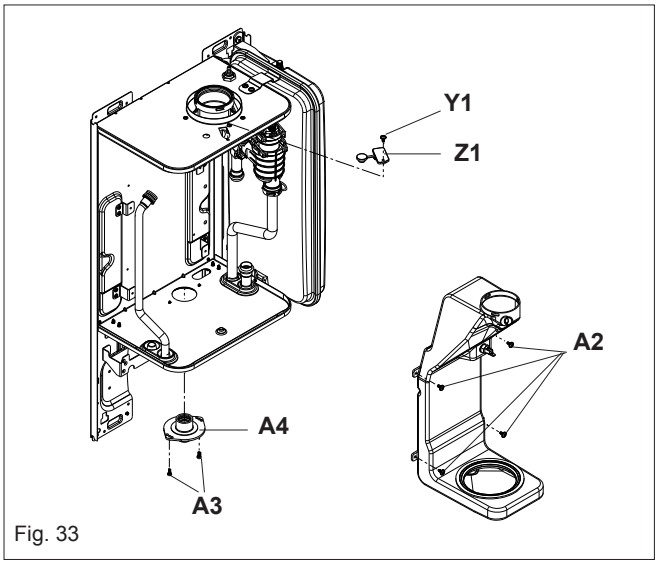

Fig. 33

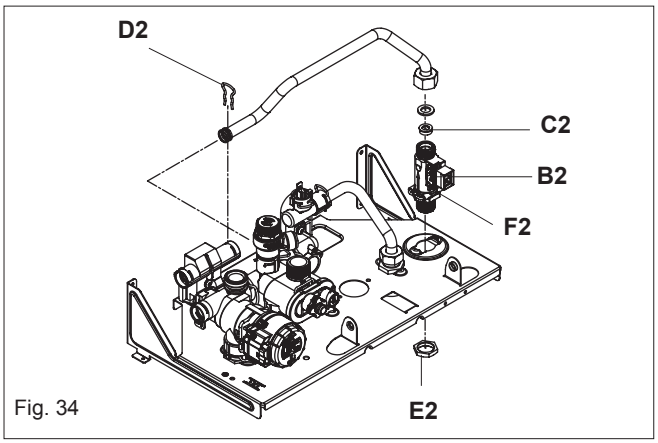

Fig. 34

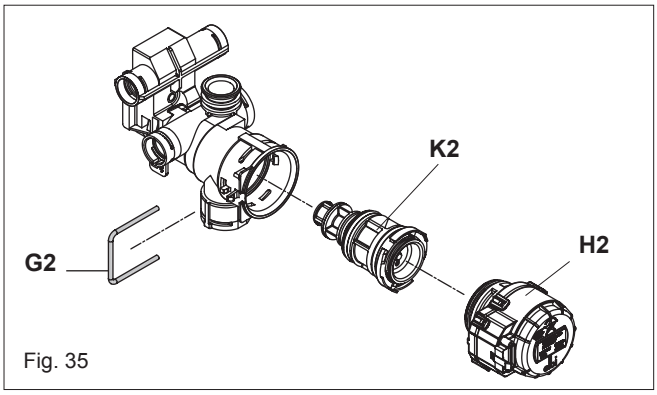

Fig. 35

7.1 CHECKING APPLIANCE OPERATION

When carrying out any repairs or servicing to the appliance, the relevant commissioning procedure must be undertaken to ensure the continued safe operation of the appliance. Particular attention should be made to ensure gas tightness, water tightness and the electrical integrity of the appliance.

7.2 APPLIANCE MODES OF OPERATION

NOTE

There must be sufficient system water pressure (min. 0.5 bar) to ensure the water pressure switch is activated. If there is insufficient system pressure the pump and fan will be prevented from operating and the low-pressure fault code will be indicated.

7.2.1 SELECTOR SWITCH IN THE OFF/RESET POSITION

When the selector switch is in the OFF/RESET position, the following functions are active.

Active functions:

• frost-protection system
• pump & actuator anti-block.

7.2.2 ON-BOARD FUNCTIONS

- **CO FUNCTION:** the CO function when activated, will allow the appliance to run at CH maximum, DHW maximum or minimum output whilst a combustion analysis check or a mechanical gas valve calibration is being carried out. Whilst the CO function is active, all other functions are disabled (minimum power operating period, anti-cycle, set-point, etc). Once enabled, the CO function will remain active for a 15-minute period, or until the function is manually deactivated
- **FROST-PROTECTION:** this function is only active when there are no requests for heating or DHW. If the temperature drops below 5°C, the boiler will operate on minimum power until the temperature of the thermistors reaches 35°C for CH and 55°C for DHW. Thereafter the pump & fan will over-run for 30-seconds.
- **ANTI-CYCLE FUNCTION:** the anti-cycle function ensures the burner remains switched off for at least 3-minutes after the set-point hysterisis (set-point + 5-deg) for CH heat request.
- **PUMP ANTI-BLOCK FUNCTION:** when there has been no heating or HW request for 24-hours, the anti-block cycle is activated. The pump will be activated for a period of 30-seconds.
- **ACTUATOR ANTI-BLOCK FUNCTION:** when there has been no heating or HW request for 24-hours, the anti-block cycle is activated. The divertor valve actuator will motor briefly to the heating position, and then back to the DHW position. The pump will run briefly.
- **SARA function:** the SARA function permits the boiler (when the set-point is within the SARA range) to automatically adjust (raise) the heating flow outlet temperature should the room thermostat contacts remain closed for more that 20-minutes.
- **DHW PRE-HEAT FUNCTION:** when the DHW pre-heat function is enabled, the appliance will light periodically to maintain the temperature of the DHW heat exchanger. When the DHW thermistor and the primary thermistor fall below 35 °C and 55 °C respectively, the boiler will fire on minimum +25% power until the primary thermistor exceeds 55 °C. Thereafter the pump will over-run for a period of 30-seconds.

7.2.3 HEATING MODE

With the selector switch in the heating & hot water position and any additional controls (time clock, programmer, room thermostat, etc.) calling for heat, the appliance will operate in the heating mode. The pump and fan will be activated via the flow temperature sensor. When the fan is sensed to be operating correctly (tacho signal), the ignition sequence commences. Ignition is sensed by the electronic circuit to ensure flame stability at the burner. Once successful ignition has been achieved, the electronic circuitry increases the gas rate to 75% for a period of 15 minutes. The speed of the fan and therefore the output of the boiler is determined by the temperature of the water sensed by the flow temperature sensor, consequently a high temperature at the flow sensor results in a lower fan speed. As the water temperature increases, the temperature sensors – located on the flow pipe of the boiler – reduce the fan speed via the electronic circuitry. Depending on the load, either the water temperature will continue to rise until the set point is achieved or the water temperature will fall whereby fan speed will increase relative to the output required. When the boiler has reached the set point (+ hysterisis), the burner will switch off. The built-in anti-cycle device prevents the burner from re-lighting for approximately 3-minutes. When the temperature of the flow sensor falls below the set point (- hysterisis), the burner will re-light.

NOTE

If the spark/sensing electrode does not sense ignition the appliance will re-attempt ignition a further 4-times then go to lockout. When the set-point has been reached (the position of the heating temperature selector) as measured at the primary thermistor, the appliance will begin the modulation phase whereby the fan and gas valve will continuously modulate to maintain the set-point. If the temperature continues to rise and exceeds the set-point by 5°C (hysterisis), the burner will shut down. A new ignition sequence will be enabled when the 3- minute anti-cycle has been performed and the temperature at the primary thermistor has dropped 5°C (hysterisis) below the set-point.

7.2.4 DHW MODE

With the selector switch in either the hot water only or heating & hot water position, the appliance will operate in the hot water mode whenever a DHW outlet is opened. A flow rate exceeding 2-litres per minute will activate the DHW flow switch whereupon the pump and fan will be activated via the flow temperature sensor. When the fan is sensed to be operating correctly (tacho signal), the ignition sequence commences. Ignition is sensed by the electronic circuitry to ensure flame stability at the burner. Once successful ignition has been achieved, the electronic circuit allows the gas rate to achieve the modulation value.

NOTE

When the request for heating and/or hot water has been satisfied, the appliance pump and fan may continue to circulate to dissipate any residual heat within the appliance.

ATTENTION

Gas type and appliance output **must be set** according to the specific appliance specification. Vokèra accepts no responsibility if the gas type is not correctly adjusted according to the respective appliance specification as detailed on the appliance data badge.

7.3 CHECKING THE CO_2 AND ADJUSTING THE GAS VALVE

THE GAS VALVE MUST BE SET-UP OR ADJUSTED WITH THE AID OF A PROPERLY CALIBRATED FLUE GAS ANALYSER.

Isolate the appliance from the electrical supply and remove the appliance casing as described in 4.7.1. Restore the electrical supply to the boiler and switch the boiler to the OFF mode.

Have access to the printed circuit board, locate and open the closing plug on the dash board (**L2**), locate and press the CO button (see fig. 36 pos. **SW1**). Press the button the number of times according the function requirement as par 7.3.1.

Set the flue gas analyser to read CO_2, allow the burner to stabilise and insert the probe into the flue analysis test point (Y1-Z1 fig. 33). The appliance will operate in CO_2 mode for approximately 15 minutes.

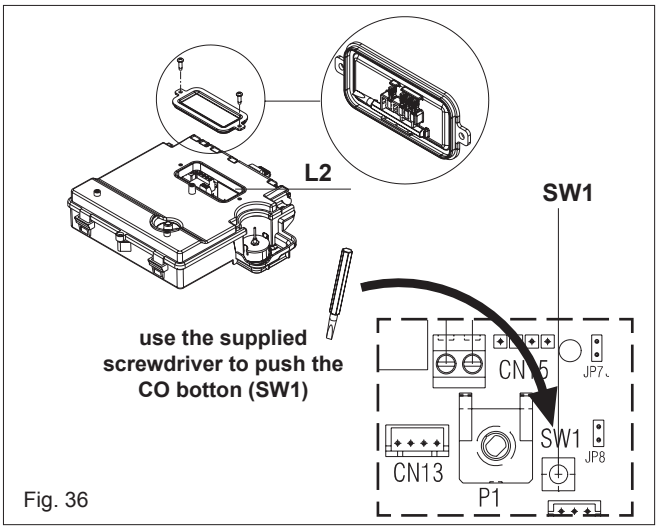

Fig. 36

7.3.1 CO_2 FUNCTION SETTINGS

Locate the CO button (see 7.3)

Select the main selector switch in position ⏻.

CO_2 FUNCTIONS	ACTION ON THE BUTTON	LED STATUS
combustion analysis mode	press once = burner running at maximum heating	yellow led blinking
gas valve maximun setting	press twice = burner running at maximum DHW	yellow led blinking + red led fixed
gas valve minimum setting	press three time = burner running at minimum	yellow led blinking + green led fixed

NOTE

1 - Any additional pressing of CO button after the third time the burner switched between maximum DHW and minimum.

2 - To restart the CO function it is necessary to pass throught the ⏻ position with the main selector switch.

7.3.2 GAS VALVE MAXIMUM SETTING

Set the CO_2 button at maximum (see 7.3.1), once the maximum is obtained check that it corresponds with the appropriate CO_2 value (Maximum) for the respective appliance (see 2.11). If the CO_2 reading is correct, proceed to gas valve minimum setting (7.3.3).

However, if the CO_2 reading is incorrect, the maximum gas pressure must be adjusted as follows:

- using a 2.5mm Allen key, very slowly turn the maximum adjustment screw (see fig. 37) – clockwise to decrease, counter clockwise to increase – until the correct value is displayed on the CO_2 analyser (allow time for the analyser to stabilise).

7.3.3 GAS VALVE MINIMUM SETTING

Set the CO_2 button at minimum (see 7.3.1), once the minimum is obtained check that it corresponds with the appropriate CO_2 value (Minimum) for the respective appliance (see 2.11). If the CO_2 reading is correct, proceed to completion (7.3.4).

However, if the CO_2 reading is incorrect, the minimum gas pressure must be adjusted as follows:

- locate the minimum adjustment screw (fig. 37), using a suitable screwdriver remove the protection plug
- using a 4mm Allen key, very slowly turn the minimum adjustment screw (see fig. 37) - clockwise to increase, counter clockwise to decrease - until the correct value is displayed on the CO_2 analyser (allow time for the analyser to stabilise).

7.3.4 COMPLETION

On completion of the combustion analysis check and/or any gas valve adjustment, refit the plug (fig. 36 - **L2)** and move the mode selector throught ⏻ position. Remove the test probe from the test point and refit the sealing screw/s and/or cap.

IMPORTANT

A GAS TIGHTNESS CHECK MUST BE CARRIED OUT IF ANY GAS CARRYING COMPONENTS HAVE BEEN REMOVED, REPLACED OR DISTURBED.

7.4 COMBUSTION ANALYSIS TEST

A combustion analysis check can easily be carried out on the appliance via the test points located on the top of the appliance (see 7.3).

- Operate the boiler in combustion analysis mode (see 7.3.1)
- Insert the flue gas analyser probe into the flue gas test point (see fig. 33) and compare the values with those shown in section 2 (Nat. Gas) or section 9 (LPG). If different adjust the gas valve according to 7.3.1, 7.3.2, & 7.3.3.

The appliance will operate in CO_2 mode for approximately 15minutes.

Note: If a measured CO/CO_2 ratio of 0.004/1 or less AND a CO reading of less than 350ppm cannot be achieved, please contact Vokera technical for advice.

Note: When checking the air inlet test point, insert the probe no more than 25mm into the test point.

7.5 CHECKING THE EXPANSION VESSEL

Carry out the component removal procedure as described in 6.4. You must ensure that the boiler is completely drained of water. Using a suitable pressure gauge, remove dust cap on expansion vessel and check the charge pressure. The correct charge pressure should be 1.0 bar ± 0.1 bar. If the charge pressure is less, use a suitable pump to increase the charge.

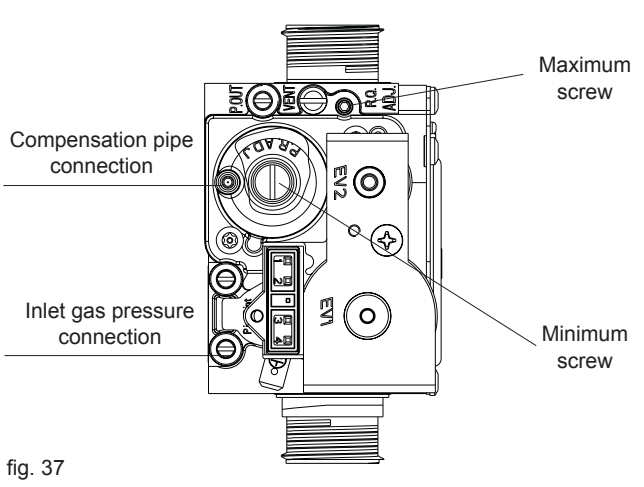

fig. 37

NOTE

You must ensure the drain valve is in the open position whilst re-charging takes place. Replace the dust cap and carry out the relevant commissioning procedure (section 5).

7.6 EXTERNAL FAULTS

Before carrying out any faultfinding or component replacement, ensure the fault is not attributable to any aspect of the installation.

7.6.1 INSTALLATION FAULTS

Symptom	Possible cause
No ignition	Check wiring/check electrical supply
No hot water	Check pipe-work
No heating	Check external controls

Fault	Possible cause
Red led fixed	Check gas supply, check flue system, check polarity

7.7 ELECTRICAL CHECKS

Any electrical checks must be carried out by a suitably qualified person.

7.7.1 EARTH CONTINUITY TEST

Isolate the appliance from the electrical supply, and using a suitable multi-meter carry out a resistance test. Connect test leads between an appliance earth point and the earth wire of the appliance supply cable. The resistance should be less than 1 OHM. If the resistance is greater than 1 OHM check all earth wires and connectors for continuity and integrity.

7.7.2 SHORT CIRCUIT CHECK

Isolate the appliance from the electrical supply, and using a suitable multi-meter, carry out a short circuit test between the Live & Neutral connections at the appliance terminal strip. Repeat above test on the Live & Earth connections at the appliance terminal strip.

NOTE

Should it be found that the fuse has failed but no fault is indicated, a detailed continuity check will be required to trace the fault. A visual inspection of components may also assist in locating the fault.

7.7.3 POLARITY CHECK

With the appliance connected to the electrical supply and using a suitable multimeter, carry out the following voltage tests:

- connect test leads between the Live & Neutral connections at the appliance terminal strip. The meter should read approximately 230V ac. If so proceed to next stage. If not, see 7.7.4.
- connect test leads between the Live & Earth connections at the appliance terminal strip. The meter should read approximately 230V ac. If so proceed to next stage. If not, see 7.7.4.
- connect test leads between the Neutral & Earth connections at the appliance terminal strip. The meter should read approximately 0 – 15Vac. If so polarity is correct. If not, see 7.7.4.

7.7.4 REVERSED POLARITY OR SUPPLY FAULT

Repeat the above tests at the appliance isolator, if testing reveals correct polarity and/or supply at the isolator, re-check wiring and connections between the isolator and the appliance. If tests on the isolator also reveal reversed polarity or a supply fault, consult the local electricity supplier for advice.

7.7.5 RESISTANCE TO EARTH CHECK

Isolate the appliance from the electrical supply, and using a suitable multi-meter carry out a resistance test. Connect test leads between the Live & Earth connections at the appliance terminal strip. If the meter reads other than infinity there is a fault that must be isolated, carry out a detailed continuity check to identify the location of the fault.

These series of checks must be carried out before attempting any faultfinding procedures on the appliance. On completion of any task that required the disconnection and re-connection of any electrical wiring or component, these checks must be repeated.

7.8 FAULT FINDING

Before attempting any faultfinding, the electrical checks as detailed in 7.7 must be carried out. Isolate the appliance from the electrical supply.

Disconnect any external controls from terminal plug (CN5 fig. 39), and insert a link-wire between the two wires at the 'TA' connections.

NOTE

Restore the electrical supply to the boiler and turn the selector switch to the on position. The boiler should now function as described in section 7. Should the boiler fail to respond, the internal fuses and connectors should be checked to ensure integrity and continuity.

7.9 COMPONENT VALUES & CHARACTERISTICS

COMPONENT	VALUE
Fan	230Vac
Pump	230Vac
Valve actuator	230Vac
Ignition transformer	230Vac
Gas valve	230Vac
Room thermostat connection	24Vdc
NTC thermistor (dry contact)	10Kohm
NTC thermistor (wet contact)	10Kohm
FUNCTION	**VALUE**
Standard Heating temperature range (min – max °C)	40 - 80
DHW temperature range (min – max °C)	37 - 60
75% maximum CH time	15 min
Heating OFF hysterisis (°C)	SP + 5
Heating ON hysterisis (°C)	SP – 5
DHW OFF hysterisis (°C)	SP + 5
DHW ON hysterisis (°C)	SP + 4
Anti-cycle delay	3-min
Pump over-run	30-sec
Low output (min. output + %)	Min+25
CO function max temp. (°C)	90
CO re-light temp. (°C)	78
CO function time	15-min
Flow NTC max temp. (°C)	90
High limit thermostat (°C)	105
Flue NTC max temp. (°C)	125
Maximum differential (°C)	35
IGNITION CONTROL	**VALUE**
Ignition attempts before L/O (lockout)	5
Re-ignition attempts after loss of flame signal	5

APPLIANCE STATUS LED AND FAULT CODES

When the boiler detects a temporary fault condition, the appropriate led indication is shown. If/when the fault is final, the pump will perform a 60-second post circulation and the red LED will be illuminated. See table on pag. 4.

SECTION 8 - WIRING DIAGRAMS

8.1 EXTERNAL WIRING

The appliance comes supplied with a time clock to allow operation of the boiler via the mode selector switch. If external controls are to be added to the system, they must be connected to the appliance as shown in the following diagrams.

For advice on controls that are not featured in this book, please contact Vokèra technical on 0844 391 0999.

8.1.1 EXTERNAL WIRING LIMITATIONS

Low voltage and High voltage cables must be run separately. Any external wiring must remain within the limits as detailed: room thermostat = 30-metres.

8.2 TYPICAL CONTROL APPLICATIONS

The appliance can be used with the following controls:
• single-channel, voltage-free time clocks (fig. 39)
• programmable RF room thermostats (fig. 39)
• low voltage (24Vdc) room thermostat (CN5 fig. 40)

8.3 OTHER DEVICES

Contact the controls manufacturer and/or Vokèra technical department should you require more specific information on the suitability of a particular control. Further guidance on the recommended practice for the installation of external controls, can be found in CHeSS – HC5/HC6 (www.energyefficiency.gov.uk).

8.4 VOKÈRA LOWER COVER MECHANICAL CLOCK (fig. 3)

The Vokèra lower cover mechanical clock kit (product code 20025081) is entirely suitable for the Easi-Heat Plus C range and eliminates the need for an external time control.
The kit is comprised of the following:
• lower cover
• mechanical clock
• wiring harness
• instructions.

Isolate the appliance from the electrical supply, remove the boiler casing (see 4.7.1) and locate factory fitted connector plug and connect to the corresponding plug supplied with the mechanical clock wiring harness.
Refit the boiler casing.
Fit the cover kit to the boiler.

IMPORTANT
- The boiler must always be supplied with a permanent 230V electrical supply.
- The room thermostat connection is low voltage (24 Vdc).
- Do not connect any controls or auxiliary equipment to the low-voltage terminal strip, other than that approved/supplied by Vokèra Ltd.

MECHANICAL CLOCK - RADIO FREQUENCY RECEIVER

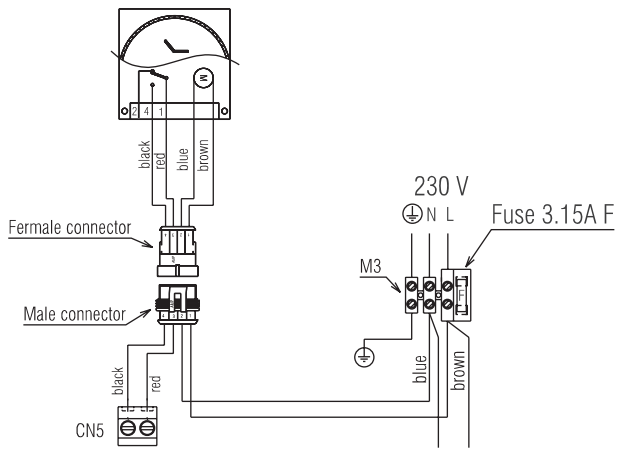

Fig. 39

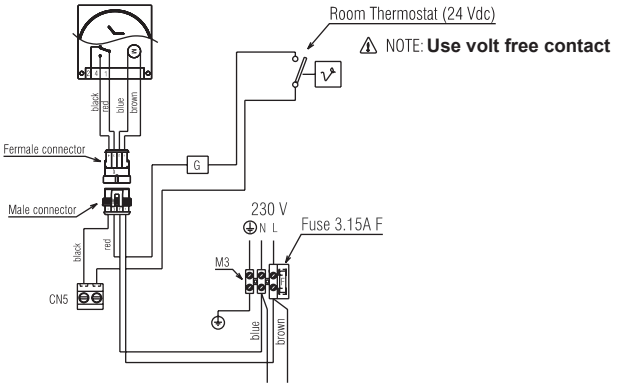

Fig. 40

FUNCTIONAL DIAGRAM

Fig. 41

NOTE: L-N-E connection is advisable

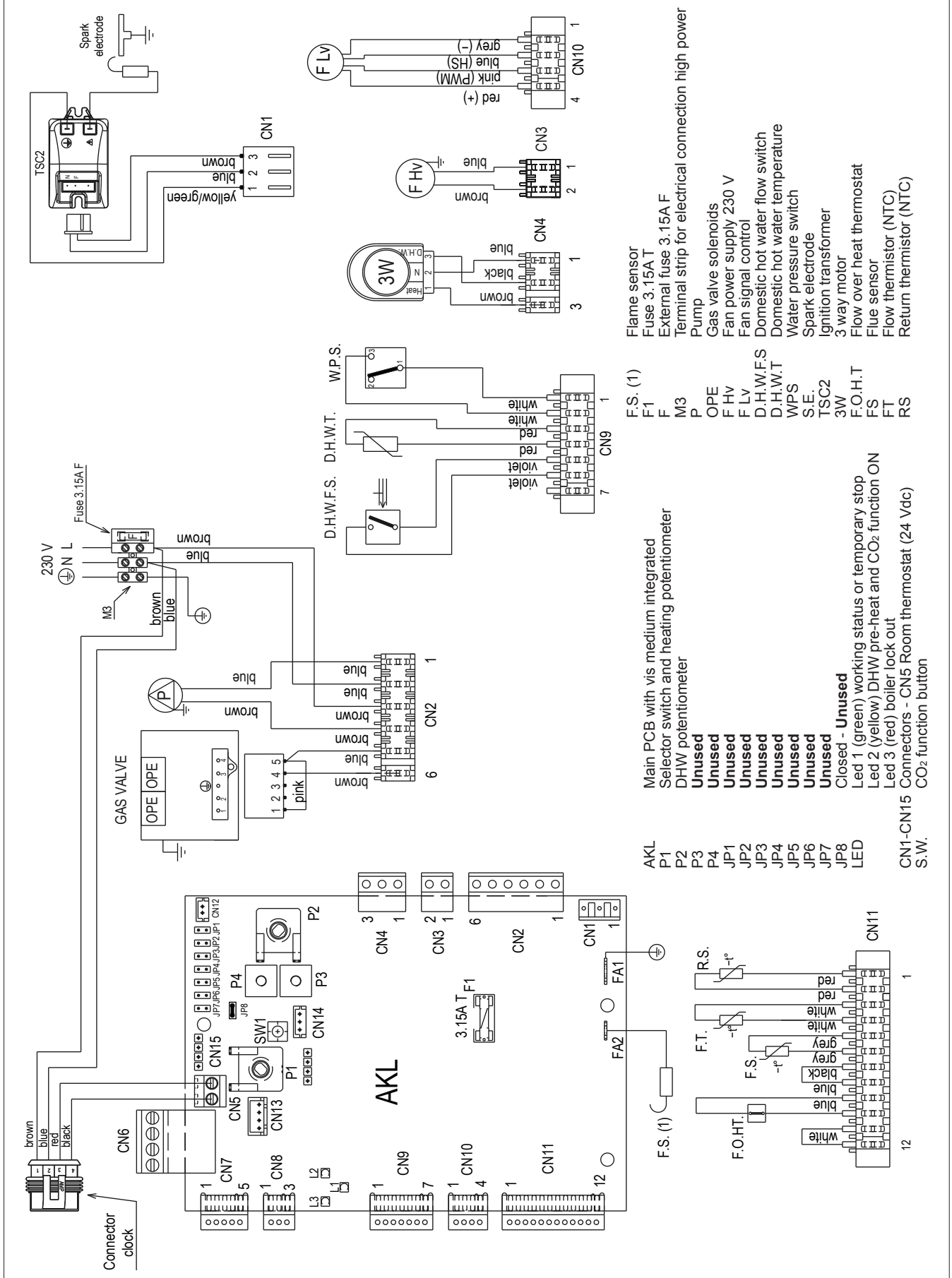

SECTION 9 - LPG INSTRUCTIONS

9.1 RELATED DOCUMENTS

BS 5440	**PARTS 1 & 2**	**FLUES & VENTILATION REQUIREMENTS**
BS 5449	**PART 1**	**FORCED CIRCULATION OF HOT WATER SYSTEMS**
BS 5482	**PART 1**	**DOMESTIC BUTANE & PROPANE GAS BURNERS IN PERMAMENT DWELLINGS**
BS 5546		**INSTALLATION OF GAS HOT WATER SUPPLIES FOR DOMESTIC PURPOSES**
BS 6798		**INSTALLATION OF BOILERS OF RATED NOT EXCEEDING 60kW**

9.2 TECHNICAL DATA

Gas Pressures	**Easi-Heat Plus 25 C**	**Easi-Heat Plus 29 C**
Inlet pressure	37.0 mbar	37.0 mbar
Heating maximum gas rate (kg/hr)	1.55	1.94
DHW maximum gas rate (kg/hr)	1.94	2.25
Minimum gas rate (kg/hr)	0.39	0.47
Injector size	3.8 mm	3.9
Silencer flange	27 mm	29 mm
CO_2 @ maximum output (%)	10.5	10.5
CO_2 @ minimum output (%)	10.5	10.5
CO @ maximum output (ppm)	190	250
CO @ minimum output (ppm)	20	25

9.3 CONVERTING THE APPLIANCE GAS TYPE

To convert the appliance to another gas type it is necessary to change the injector and adjust the gas valve (CO_2).

- To change the injector see 6.12.1.
- To replace the flange on the silencer (only Easi-Heat Plus C 29) see 6.15.
- To adjust CO_2 values see 9.6.

9.4 GAS SUPPLY

The gas supply must be connected to the appliance by a competent LPG installer and must be of sufficient size to supply the appliance at its maximum output. An existing supply must be checked to ensure that it is of adequate size to deal with the maximum rated input of this and any other appliances that it serves.

9.5 GAS SUPPLY INSTALLATION

The entire installation including the meter must be purged and checked for gas tightness.

9.6 CHECKING THE CO_2 AND ADJUSTING THE GAS VALVE

THE GAS VALVE MUST BE SET-UP OR ADJUSTED WITH THE AID OF A PROPERLY CALIBRATED FLUE GAS ANALYSER.

Isolate the appliance from the electrical supply and remove the appliance casing as described in 4.7.1. Restore the electrical supply to the boiler and switch the boiler to the OFF mode.
Have access to the printed circuit board, locate and open the closing plug on the dash board (**L2**), locate and press the CO button (see fig. 36 pos. **SW1**). Press the button the number of times according the function requirement as par 7.3.1.
Set the flue gas analyser to read CO_2, allow the burner to stabilise and insert the probe into the flue analysis test point (Y1-Z1 fig. 33). The appliance will operate in CO_2 mode for approximately 15 minutes.

9.6.1 CO_2 FUNCTION SETTINGS

Locate the CO button (see 7.3).
Select the main selector switch in position ⏻.

CO_2 FUNCTIONS	ACTION ON THE BUTTON	LED STATUS
combustion analysis mode	press once = burner running at maximum heating	yellow led blinking
gas valve maximun setting	press twice = burner running at maximum DHW	yellow led blinking + red led fixed
gas valve minimum setting	press three time = burner running at minimum	yellow led blinking + green led fixed

NOTE

1 - Any additional pressing of CO button after the third time the burner switched between maximum DHW and minimum.

2 - To restart the CO_2 function it is necessary to pass throught the ⏻ position with the main selector switch.

9.6.2 GAS VALVE MAXIMUM SETTING

Set the CO button at maximum (see 9.6.1), once the maximum is obtained check that it corresponds with the appropriate CO_2 value (Maximum) for the respective appliance. If the CO_2 reading is correct, proceed to gas valve minimum setting (9.6.2).
However, if the CO_2 reading is incorrect, the maximum gas pressure must be adjusted as follows:

- using a 2.5mm Allen key, very slowly turn the maximum adjustment screw (see fig. 37) – clockwise to decrease, counter clockwise to increase – until the correct value is displayed on the CO_2 analyser (allow time for the analyser to stabilise).

9.6.3 GAS VALVE MINIMUM SETTING

Set the CO button at minimum (see 9.6.1), once the minimum is obtained check that it corresponds with the appropriate CO_2 value (Minimum) for the respective appliance. If the CO_2 reading is correct, proceed to completion (9.6.4).
However, if the CO_2 reading is incorrect, the minimum gas pressure must be adjusted as follows:

- locate the minimum adjustment screw (fig. 37), using a suitable screwdriver remove the protection plug
- using a 4mm Allen key, very slowly turn the minimum adjustment screw (see fig. 37) - clockwise to increase, counter clockwise to decrease - until the correct value is displayed on the CO_2 analyser (allow time for the analyser to stabilise).

9.6.4 COMPLETION

On completion of the combustion analysis check and/or any gas valve adjustment, refit the plug (fig. 36 - **L2**) and move the mode selector to the ⏻ position. Remove the test probe from the test point and refit the sealing screw/s and/or cap.

IMPORTANT

A GAS TIGHTNESS CHECK MUST BE CARRIED OUT IF ANY GAS CARRYING COMPONENTS HAVE BEEN REMOVED, REPLACED OR DISTURBED.

ATTENTION

Gas type and appliance output **must be set** according to the specific appliance specification. Vokèra accepts no responsibility if the gas type is not correctly adjusted according to the respective appliance specification as detailed on the appliance data badge.

COMMISSIONING: CO AND COMBUSTION RATIO CHECK

BEFORE CO AND COMBUSTION RATIO CHECK

The installation instructions should have been followed, gas type verified and gas supply pressure/rate checked as required prior to commissioning.

As part of the installation process, **ESPECIALLY WHERE A FLUE HAS BEEN FITTED BY PERSONS OTHER THAN THE BOILER INSTALLER**, visually check the integrity of the whole flue system to confirm that all components are correctly assembled, fixed and supported. Check that the maximum flue lengths have not been exceeded and all guidance has been followed (e.g. Technical Bulletin 008).

The flue gas analyser should be of the correct type, as specified by BS 7967.

Before use, the flue gas analyser should have been maintained and calibrated as specified by the manufacturer. The installer must have the relevant competence for use of the analyser.

Check and zero the analyser **IN FRESH AIR**, as per analyser manufacturer's instructions.

NOTE

The air/gas ratio valve is factory-set and must not be adjusted during commissioning unless this action is recommended, following contact with the Vokera technical help line. If any such adjustment is recommended and further checking of the boiler is required, the engineer must be competent to carry out this work and to use the flue gas analyser accordingly. If the boiler requires conversion to operate with a different gas family (e.g., conversion from natural gas to LPG) separate guidance will be provided by the Vokera technical help line and must be followed.

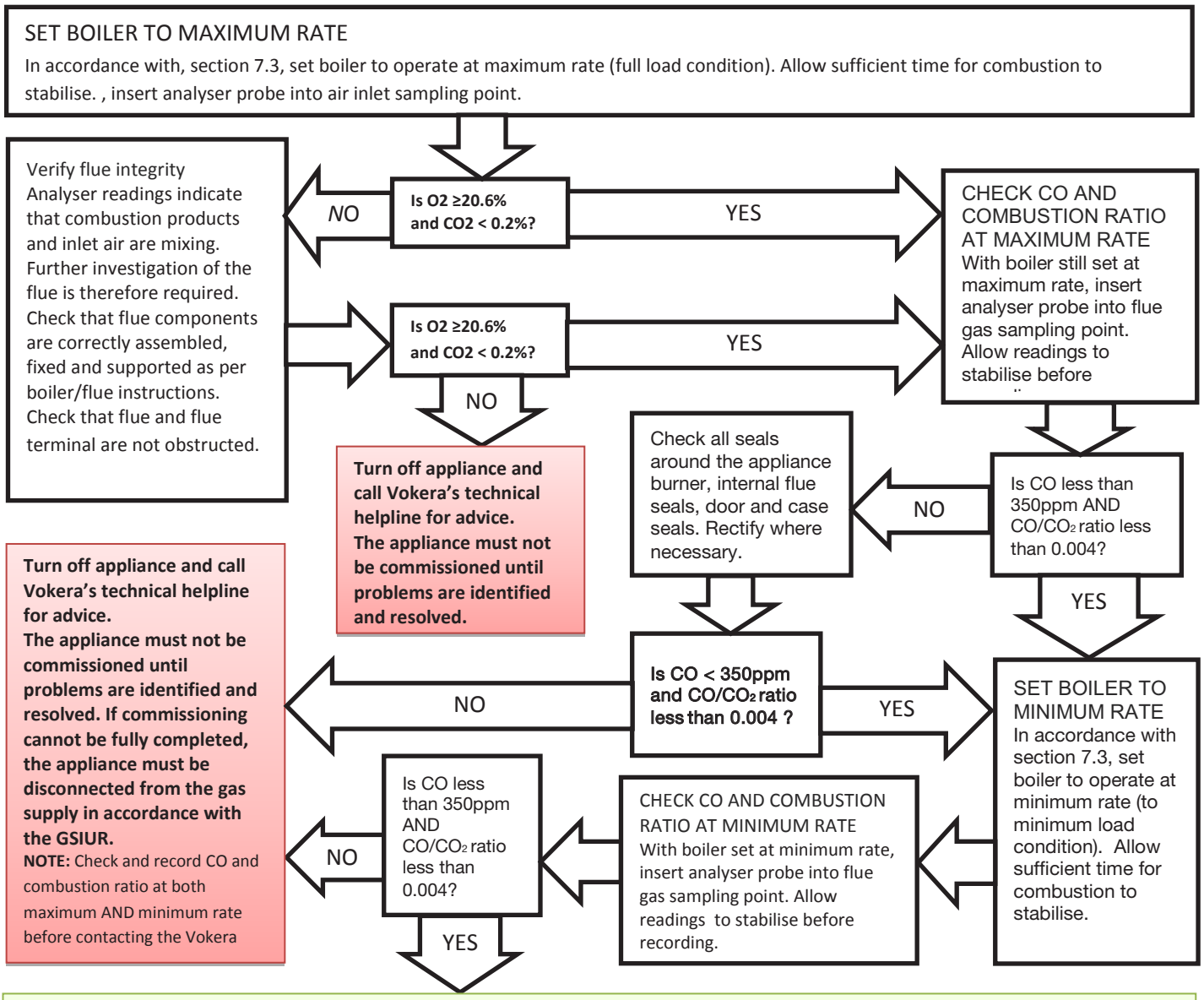

Boiler is operating satisfactorily
No further actions required.

Ensure test points are capped, boiler case is correctly replaced and all other commissioning procedures are completed.
Complete Benchmark Checklist, recording CO and combustion ratio readings as required.

Benchmark Commissioning and Servicing Section

It is a requirement that the boiler is installed and commissioned to the manufacturers instructions and the data fields on the commissioning checklist completed in full.

To instigate the boiler guarantee the boiler needs to be registered with the manufacturer within one month of the installation.

To maintain the boiler guarantee it is essential that the boiler is serviced annually by a Gas Safe registered engineer who has been trained on the boiler installed. The service details should be recorded on the Benchmark Service Interval Record and left with the householder.

benchmark
COLLECTIVE MARK
THE MARK OF QUALITY FOR THE INSTALLATION, COMMISSIONING AND SERVICING OF DOMESTIC HEATING AND HOT WATER SYSTEMS

www.centralheating.co.uk

© Heating and Hotwater Industry Council (HHIC)

GAS BOILER SYSTEM COMMISSIONING CHECKLIST

This Commissioning Checklist is to be completed in full by the competent person who commissioned the boiler as a means of demonstrating compliance with the appropriate Building Regulations and then handed to the customer to keep for future reference.

Failure to install and commission according to the manufacturer's instructions and complete this Benchmark Commissioning Checklist will invalidate the warranty. This does not affect the customer's statutory rights.

Customer name:	Telephone number:
Address:	
Boiler make and model:	
Boiler serial number:	
Commissioned by (PRINT NAME):	Gas Safe register number:
Company name:	Telephone number:
Company address:	
	Commissioning date:
To be completed by the customer on receipt of a Building Regulations Compliance Certificate*	
Building Regulations Notification Number (if applicable):	

CONTROLS (tick the appropriate boxes)				
Time and temperature control to heating	Room thermostat and programmer/timer		Programmable room thermostat	
	Load/weather compensation		Optimum start control	
Time and temperature control to hot water	Cylinder thermostat and programmer/timer		Combination Boiler	
Heating zone valves	Fitted		Not required	
Hot water zone valves	Fitted		Not required	
Thermostatic radiator valves	Fitted		Not required	
Automatic bypass to system	Fitted		Not required	
Boiler interlock			Provided	

ALL SYSTEMS				
The system has been flushed and cleaned in accordance with BS7593 and boiler manufacturer's instructions			Yes	
What system cleaner was used?				
What inhibitor was used?			Quantity	litres
Has a primary water system filter been installed?	Yes		No	

CENTRAL HEATING MODE measure and record:			
Gas rate	m^3/hr	**OR**	ft^3/hr
Burner operating pressure (if applicable)	mbar	**OR** Gas inlet pressure	mbar
Central heating flow temperature			°C
Central heating return temperature			°C

COMBINATION BOILERS ONLY				
Is the installation in a hard water area (above 200ppm)?	Yes		No	
If yes, and if required by the manufacturer, has a water scale reducer been fitted?	Yes		No	
What type of scale reducer has been fitted?				
DOMESTIC HOT WATER MODE Measure and Record:				
Gas rate	m^3/hr	**OR**	ft^3/hr	
Burner operating pressure (at maximum rate)	mbar	**OR** Gas inlet pressure at maximum rate	mbar	
Cold water inlet temperature			°C	
Hot water has been checked at all outlets	Yes		Temperature	°C
Water flow rate			l/min	

CONDENSING BOILERS ONLY		
The condensate drain has been installed in accordance with the manufacturer's instructions and/or BS5546/BS6798	Yes	

ALL INSTALLATIONS						
Record the following:	At max. rate:	CO	ppm	**AND**	CO/CO_2	Ratio
	At min. rate: (where possible)	CO	ppm	**AND**	CO/CO_2	Ratio
The heating and hot water system complies with the appropriate Building Regulations					Yes	
The boiler and associated products have been installed and commissioned in accordance with the manufacturer's instructions					Yes	
The operation of the boiler and system controls have been demonstrated to and understood by the customer					Yes	
The manufacturer's literature, including Benchmark Checklist and Service Record, has been explained and left with the customer					Yes	

Commissioning Engineer's Signature
Customer's Signature
(To confirm satisfactory demonstration and receipt of manufacturer's literature)

*All installations in England and Wales must be notified to Local Authority Building Control (LABC) either directly or through a Competent Persons Scheme. A Building Regulations Compliance Certificate will then be issued to the customer.

benchmark COLLECTIVE MARK
THE MARK OF QUALITY FOR THE INSTALLATION, COMMISSIONING AND SERVICING OF DOMESTIC HEATING AND HOT WATER SYSTEMS

© Heating and Hotwater Industry Council (HHIC)

SERVICE RECORD

It is recommended that your heating system is serviced regularly and that the appropriate Service Interval Record is completed.

Service Provider

Before completing the appropriate Service Record below, please ensure you have carried out the service as described in the manufacturer's instructions. Always use the manufacturer's specified spare part when replacing controls.

SERVICE 01					Date:
Engineer name:					
Company name:					
Telephone No:					
Gas safe register No:					
Record:	At max. rate:	CO	ppm	**AND**	CO_2 %
	At min. rate: (Where Possible)	CO	ppm	**AND**	CO_2 %
Comments:					
Signature					

SERVICE 02					Date:
Engineer name:					
Company name:					
Telephone No:					
Gas safe register No:					
Record:	At max. rate:	CO	ppm	**AND**	CO_2 %
	At min. rate: (Where Possible)	CO	ppm	**AND**	CO_2 %
Comments:					
Signature					

SERVICE 03					Date:
Engineer name:					
Company name:					
Telephone No:					
Gas safe register No:					
Record:	At max. rate:	CO	ppm	**AND**	CO_2 %
	At min. rate: (Where Possible)	CO	ppm	**AND**	CO_2 %
Comments:					
Signature					

SERVICE 04					Date:
Engineer name:					
Company name:					
Telephone No:					
Gas safe register No:					
Record:	At max. rate:	CO	ppm	**AND**	CO_2 %
	At min. rate: (Where Possible)	CO	ppm	**AND**	CO_2 %
Comments:					
Signature					

SERVICE 05					Date:
Engineer name:					
Company name:					
Telephone No:					
Gas safe register No:					
Record:	At max. rate:	CO	ppm	**AND**	CO_2 %
	At min. rate: (Where Possible)	CO	ppm	**AND**	CO_2 %
Comments:					
Signature					

SERVICE 06					Date:
Engineer name:					
Company name:					
Telephone No:					
Gas safe register No:					
Record:	At max. rate:	CO	ppm	**AND**	CO_2 %
	At min. rate: (Where Possible)	CO	ppm	**AND**	CO_2 %
Comments:					
Signature					

SERVICE 07					Date:
Engineer name:					
Company name:					
Telephone No:					
Gas safe register No:					
Record:	At max. rate:	CO	ppm	**AND**	CO_2 %
	At min. rate: (Where Possible)	CO	ppm	**AND**	CO_2 %
Comments:					
Signature					

SERVICE 08					Date:
Engineer name:					
Company name:					
Telephone No:					
Gas safe register No:					
Record:	At max. rate:	CO	ppm	**AND**	CO_2 %
	At min. rate: (Where Possible)	CO	ppm	**AND**	CO_2 %
Comments:					
Signature					

SERVICE 09					Date:
Engineer name:					
Company name:					
Telephone No:					
Gas safe register No:					
Record:	At max. rate:	CO	ppm	**AND**	CO_2 %
	At min. rate: (Where Possible)	CO	ppm	**AND**	CO_2 %
Comments:					
Signature					

SERVICE 10					Date:
Engineer name:					
Company name:					
Telephone No:					
Gas safe register No:					
Record:	At max. rate:	CO	ppm	**AND**	CO_2 %
	At min. rate: (Where Possible)	CO	ppm	**AND**	CO_2 %
Comments:					
Signature					

*All installations in England and Wales must be notified to Local Authority Building Control (LABC) either directly or through a Competent Persons Scheme. A Building Regulations Compliance Certificate will then be issued to the customer.

benchmark COLLECTIVE MARK
THE MARK OF QUALITY FOR THE INSTALLATION, COMMISSIONING AND SERVICING OF DOMESTIC HEATING AND HOT WATER SYSTEMS

© Heating and Hotwater Industry Council (HHIC)

Vokèra
heating for life

Cod. 20117173 - 04/16 - Ed. 2

Registered address:
Vokèra Ltd
Borderlake House
Unit 7 Riverside Industrial Estate
London Colney
Herts AL2 1HG

enquiries@vokera.co.uk

www.vokera.co.uk
www.vokera.ie

Sales, General Enquires

T 0844 391 0999
F 0844 391 0998

Vokèra Ireland
West Court, Callan
Co Kilkenny
T 056 7755057
F 056 7755060

Vokèra Limited reserve the right to change
specification without prior notice
Consumers statutory rights are not affected.

Company Reg No: 1047779