OPERATING, INSTALLATION & MAINTENANCE MANUAL

for

CAMRAY 5

WALL HUNG 50/70 EXTERNAL

Oil Fired Boilers

Manual Part No PL 59100

Issue No. 2

Date of Issue January 2003

HEALTH AND SAFETY

INFORMATION FOR THE INSTALLER AND SERVICE ENGINEER.

Under the Consumer Protection Act 1987 and the Health and Safety at Work Act 1974, it is a requirement to provide information on substances hazardous to health (COSHH Regulations 1988).

The Company takes every reasonable care to ensure that these products are designed and constructed to meet these general safety requirements, when properly used and installed.

To fulfil this requirement products are comprehensively tested and examined before dispatch.

This appliance may contain some of the materials below.

When working on the appliance it is the Users/Engineers responsibility to ensure that any necessary personal protective clothing or equipment is worn appropriate to parts that could be considered as being hazardous to health and safety.

INSULATION & SEALS

Glass Rope, Mineral Wool, Insulation Pads, Ceramic Fibre, Fibre Glass Insulation.

May be harmful if inhaled. May be irritating to the skin, eyes, nose or throat. When handling avoid inhalation and contact with the skin or eyes. Use (disposable) gloves, face masks and eye protection.

After handling wash hands and other exposed parts. When disposing, reduce dust with water spray, ensure parts are securely wrapped.

GLUES, SEALANTS & PAINT

Glues, Sealants and Paint are used in the product and present no known hazards when used in the manner for which they are intended.

KEROSENE & GAS OIL FUELS (MINERAL OILS)

1. The effect of mineral oils on the skin vary according to the duration of exposure.

2. The lighter fractions also remove the protective grease normally present on the surface of the skin rendering the skin dry, liable to crack and more prone to damage caused by cuts and abrasions.

3. Skin rashes (oil Acne). Seek immediate medical attention for any rash, wart or sore developing on any part of the body, particularly the scrotum.

4. Avoid as far as possible any skin contact with mineral oil or with clothing contaminated with mineral oil.

5. Never breath any mineral oil vapours. Do not fire the Burner in the open i.e. out of the Boiler as a misfire will cause unburnt oil vapours.

6. Barrier cream containing lanolin such as Rosalex Antisolv, is highly recommended together with a strict routine of personal cleansing.

7. Under no circumstance should mineral oils be taken internally.

OFTEC Code of Practice OCP/1: 1995 For the Safe Installation, Commissioning, Maintenance and Fault Rectification of Oil Firing Equipment should be consulted.

BOULTER BUDERUS

Boulter Boilers Limited
Magnet House,
30 White House Road,
Ipswich IP1 5JA
Telephone: (01473) 241555
Fax: (01473) 241321

A member of the Bullough Group of Companies

Due to a policy of continual development Boulter Buderus reserves the right to alter or amend the design of its products without prior notice.

Camray 5

CONTENTS

SECTION 1 - USER GUIDE
1:1 Introduction
1:2 Safety Notices
1:3 Installation & Commissioning
1:4 Boiler Control Panel Features
1:5 Operating Instructions
1:5:1 Boiler Control Thermostat
1:5:2 Boiler Overheat/Limit Thermostat
1:5:4 Lockout Indicator
1:5:5 Starting your Boiler
1:5:6 Switching Off Temporarily
1:5:7 Shutting Off for Summer
1:5:8 Sealed System Central Heating
1:5:9 Frost Protection
1:5:10 Oil Delivery
1:5:11 Maintenance/Troubleshooting Guide

SECTION 2 - INTRODUCTION
2:1 Introduction
2:2 Commissioning
2:3 Safety

SECTION 3 - TECHNICAL DATA
3:1 Fuels
3:2 Boiler Technical Details
3:3 Burner Details
3:4 Electric's
3:5 Dimensions
3:6 Commissioning Data

SECTION 4 - INSTALLATION
4:1 Standards and Regulations
4:2 The Heating System
4:3 Siting & Positioning
4:4 Installation of Boiler
4:7 Oil Storage
4:8 Oil Supply
4:9 Oil Burner
4:10 Control Panel
4:11 Wiring Diagram

SECTION 7 - COMMISSIONING
7:1 Commissioning
7:2 Responsibility
7:3 Reporting
7:4 Recommended Commissioning Check List
7:5 Recommended Commissioning Tests

SECTION 8 - MAINTENANCE
8:1 Maintenance
8:2 Air Shutter Adjustment

8:3 Baffle Arrangement

SECTION 9 - SPARES & ACCESSORIES
See Spare Parts

SECTION 10 - FAULT FINDING
10:1 Fault Finding
10:2 Fault Finding Chart

BOULTER BUDERUS CAMRAY 5 WALL HUNG *PAGE 1*

1:1 INTRODUCTION

Getting to know your New Camray 5 Boiler

Thank you for choosing the Camray 5 -manufactured in the UK by Boulter Buderus who are renowned oil-firing specialists. Before using your new Boiler, we ask that you carefully read the following information.

All Camray appliances are the result of many years of research, development and experience. Whilst our Boilers are designed with simplicity of operation in mind, there are certain features and benefits which only become obvious when you thoroughly understand how best to use your new Camray product.

We trust that you will enjoy many years of reliable service from your new Camray Boiler and, once again, thank you for choosing Camray.

USEFUL INFORMATION

Your installer will help you complete this where necessary.

About the Boiler*

Boiler Model	
Serial Number	
Burner Type	
Fuel Type:	Kerosene C2

**Information can be found on appliance data label located inside of the casing. Also on the front cover of the installation manual.*

About the installation

Installer	
Installation Date	
Service Engineer	
Oil Tank Capacity	*Litres*
Oil Supplier 1	
Oil Supplier 2	

1:2 IMPORTANT SAFETY NOTES

To obtain the best possible performance and trouble free operation from your Boiler, it is important that you read these instructions carefully. Your Camray Boiler has built-in safety features, which are detailed in the relevant section of this manual.

1:2.1

The heating system must comply with the latest editions of British Standard 5410 and The Building Regulations.

Please note: It is essential in the interest of the Boiler efficiency and reliable performance that once the Boiler has been installed it is first commissioned by a competent and preferably an O.F.T.E.C.* registered engineer. It is the responsibility of the installer to ensure that the Boiler is commissioned.

If an engineer is not known, Boulter Buderus will be pleased to provide details of commissioning and servicing engineers from their register.

**The Oil Firing Technical Association for the Petroleum Industry - Banstead, Surrey 01737 373311.*

- If it is known or suspected that a fault exists on the Boiler, it MUST NOT be used until the fault has been corrected by a competent engineer (see Failure to Start).
- It is essential that the instructions in this booklet are strictly followed for safe and economic operation of the Boiler. Failure to observe these instructions may invalidate your right to free breakdown cover during the guarantee period. We recommend that you keep these instructions in a place near your appliance for easy reference.

Opening the cover

Unlock the cover using the key supplied. Raise the cover which is hinged at the top and unclip the stay inside the cover and relocate it firmly in the channel forming part of the flue offtake.

BOULTER BUDERUS CAMRAY 5 WALL HUNG *PAGE 2*

- If any part of the Boiler or its flue is modified, then the guarantee/warranty will be invalidated.

1:3 INSTALLATION & COMMISSIONING

After your Camray Boiler has been installed it MUST be commissioned by a competent engineer preferably an O.F.T.E.C. registered engineer, or by one of our registered service engineers. Commissioning involves testing the Boiler to ensure that it is working correctly, and also setting the Burner correctly to ensure the most efficient operation and use of fuel. If the Boiler has not been commissioned, it may not be operating at the maximum efficiency possible for your heating system, and may also invalidate the guarantee.

1:4 BOILER CONTROL PANEL

Boiler Control Panel (see fig 1)

1. Boiler Control Thermostat Switch/Mains On Switch.

2. Boiler Overheat/Limit Thermostat Reset Button**.**

1:5 OPERATING INSTRUCTIONS

1:5.1 BOILER CONTROL THERMOSTAT

The Boiler Control Thermostat is also the ON/OFF switch for the Boiler. To Switch the Boiler off, turn the Thermostat to the ‘OFF’ position and isolate at the mains isolating switch or external control.

The Boiler Control Thermostat also controls the water temperature within the Boiler. The recommended Control Thermostat settings are as follows:

WINTER HEATING & HOT WATER 4 to 5

SUMMER HOT WATER ONLY 3 to 4

The Boiler Control Thermostat automatically switches the Burner ON and OFF to maintain the selected temperature. The Burner is lit by an automatic ignition system and therefore there is no pilot flame.

The Boiler should not be operated below 60°C as this will cause corrosion which will reduce the life of the Boiler (Summer position).

1:5.2 BOILER OVERHEAT/LIMIT THERMOSTAT

The Boiler is fitted with a safety overheat/limit thermostat. This will interrupt the power supply to the Boiler and shut it down completely in the unlikely event of overheating.

Should this occur, wait for the Boiler to cool, and then reset the thermostat by pressing the limit thermostat reset button located under the Control thermostat - see fig 1.

If this problem still persists, turn off the Boiler and consult your installer.

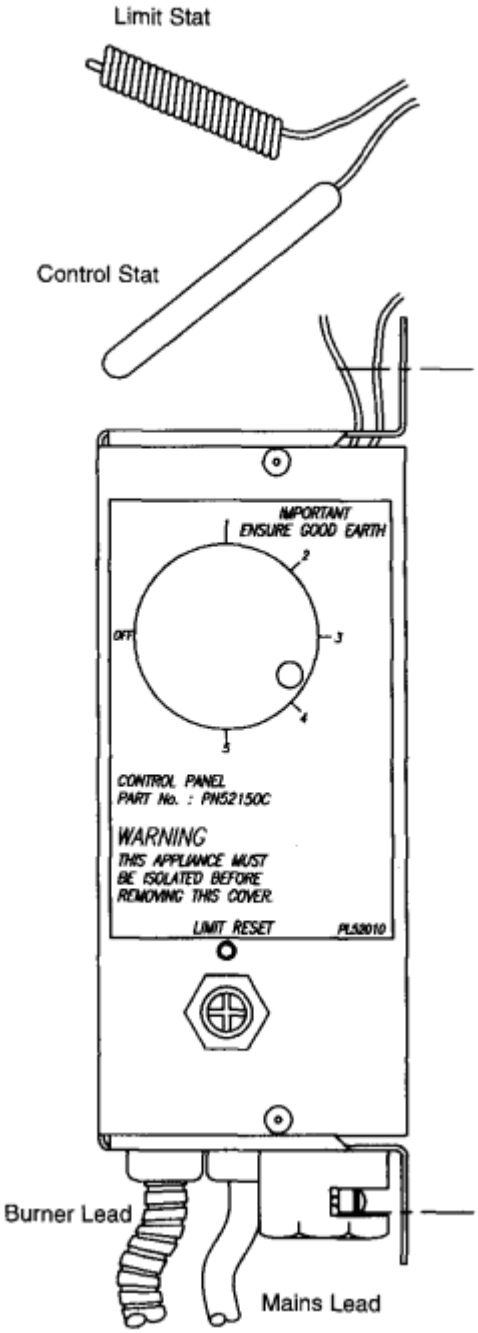

Fig. 1 Control Panel Arrangement

BOULTER BUDERUS CAMRAY 5 WALL HUNG *PAGE 3*

1:5.4 LOCKOUT INDICATOR

In the unlikely event of a Burner malfunction, it will automatically shutdown, and the red lockout indicator on the burner will be lit.

To restart the Burner, wait for a period of at least 45 seconds. Open the cover (as illustrated) and press the lockout reset button located on the front of the Burner (see fig 2). If the Burner immediately goes to lockout again, wait three minutes and then repeat the procedure, once more only, by pressing the reset button again.

If this problem still persists, turn off the Boiler and consult your engineer.

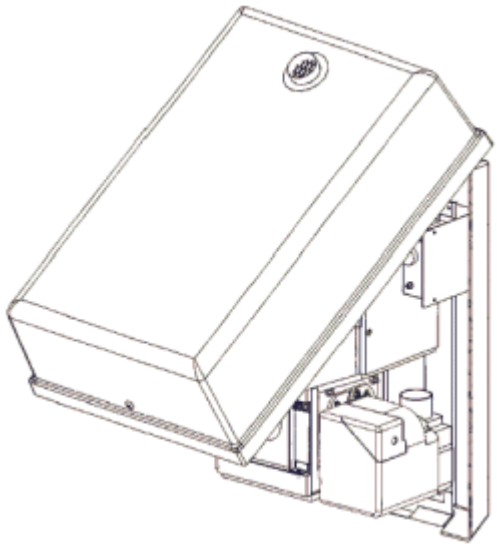

Fig. 2

1:5.5 STARTING THE BOILER

1. Ensure that all external controls, e.g. programmer, timer, room thermostat etc., are turned on and calling for heat.

2. Make sure the Boiler Control Thermostat is set within the recommended range (see fig 1) and that the mains electricity and oil are turned on.

1:5.6 SWITCHING THE BOILER OFF - TEMPORARILY

The Boiler may be stopped by turning the boiler control thermostat to the OFF position on the standard Control Panel. Alternatively, the Boiler may be stopped by:

1. Turning off the mains switch controlling the Boiler, or

2. Turning the programmer to its off position.

1:5.7 SHUTTING OFF FOR THE SUMMER

If the Boiler is to be shut off for the summer, it is advisable to have it thoroughly serviced. Thorough cleaning will minimise corrosion during the idle period. Remember, when the Boiler is required, to ensure that the oil supply is open before switching on.

1:5.8 SEALED SYSTEM CENTRAL HEATING

If your Camray 5 Boiler is used on a SEALED SYSTEM, it is important that the correct operating system pressure is maintained. Your Installer should give guidance on this.

1:5.9 FROST PROTECTION

A frost thermostat is fitted in the control panel. If the outside temperature falls below 5°C the boiler will operate for a period until the temperature inside the boiler casing is above 5°C.

1:5.10 OIL DELIVERY

Where possible, it is advisable to temporarily switch the Boiler off when your oil supply is being replenished. This is to allow any sediment to settle and not be drawn into the Boiler. If not this could result in an inconvenient break down.

We advise that you keep your Boiler off for one hour after the oil is delivered to your tank. Please ask your supplier, or the driver to notify you before the oil is discharged.

1:5.11 MAINTENANCE AND TROUBLE SHOOTING GUIDE

1:5.11.1 MAINTENANCE

For normal cleaning of the outside casing, simply wipe with a damp cloth. The Boiler must be serviced at regular intervals by a qualified service engineer. Failure to have the Boiler serviced at the recommended intervals will invalidate the guarantee/warranty.

Using Kerosene Class C2 fuel, the Boiler should be serviced at twelve monthly intervals to ensure that the efficiency and performance of your boiler is maintained.

BOULTER BUDERUS CAMRAY 5 WALL HUNG *PAGE 4*

Flue Terminal Pluming

Due to the high efficiency of the Camray 5 range white water vapour from the flue discharge - called pluming- may be observed from time to time under certain weather conditions. This is perfectly normal and should be no cause for concern.

1:5.11.2 FAILURE TO START

If the Burner fails to start, adopt the following procedure:

1. Check that there is oil in the tank and that the supply valve is open.

2. Check the programmer or time switch to ensure that it is operating and set to the correct time to be "ON".

3. Check that the Boiler Control Thermostat is set high enough to be "ON" or calling for heat.

4. Check whether the limit thermostat has tripped. Press the reset button once the temperature has dropped sufficiently.

5. Check whether the red LOCKOUT indicator on the Burner Control box is glowing. This indicates that the Burner has attempted to start but has not fired successfully. Press the reset button on the Control box, when released, the light will go out and the Burner will again attempt to start. If the Burner does not run and again goes to lockout with red indicator glowing:

- Wait three minutes.
- Repeat the procedure by pressing the button.
- Failure to start on the second attempt indicates a fault requiring attention.
- Switch off the mains supply and call your service engineer.

BOULTER BUDERUS CAMRAY 5 WALL HUNG *PAGE 5*

2:1 INTRODUCTION

This Manual covers Installation, Commissioning and Maintenance of the Camray 5 WH 50/70 External boiler.

The Camray 5 is:

1. Designed for fully pumped Central Heating and Hot Water Systems.

2. Suitable for conventional open vented Central Heating systems.

3. Suitable for sealed Central Heating systems which are within the maximum permitted working pressure. All

Boilers are supplied with a manual reset limit thermostat.

4. Suitable for new installations and for replacing existing boilers.

CAMRAY Boilers offer greater freedom to select the most suitable position for siting.

All models are supplied as standard with horizontal firing Oil Burner.

Note: The nozzle on this appliance is only covered by a 1 year guarantee.

2:2 COMMISSIONING

It is essential in the interest of boiler efficiency and reliable performance that once the boiler has been installed it is first commissioned by a qualified engineer.

If an engineer is not known, Boulter Buderus will be pleased to provide details of commissioning and servicing engineers from their register.

See Section 7 for Commissioning Procedure.

IMPORTANT

It is the responsibility of the installer to ensure that the boiler is commissioned by a competent engineer, preferably an OFTEC* Registered Commissioning Engineer.

*The Oil Firing Technical Association for the Petroleum Industry, Banstead, Surrey

(01737) 373311.

2:3 SAFETY

READ HEALTH AND SAFETY INFORMATION ON INSIDE FRONT COVER OF THIS MANUAL.

IMPORTANT

Should you wish to remove or dismantle any covers or parts of the boiler for cleaning or maintenance ALWAYS FIRST SWITCH OFF THE ELECTRICITY SUPPLY.

1. On no account should any part of the Boiler or its Flue be modified.

2. The wiring of the control panel should be as the wiring diagrams included in this Manual. Wiring should not be tampered with, modified or changed for any reason.

3. Only use Boulter replacement parts.

Non compliance with the above will invalidate the Guarantee.

BOULTER BUDERUS CAMRAY 5 WALL HUNG *PAGE 6*

3:1 LIQUID FUELS

The Camray 5 Boilers will burn liquid fuels complying with BS2869 Part 2 1988 Class C2 as specified in the Code of Practice for Oil Firing BS5410 Part 1.

Class C2 (Kerosene)

This fuel is suitable for all Camray 5 models. Burners are supplied with the appropriate nozzle and pump

pressure as standard for this fuel. They are set for mid-range output. Details of all nozzle sizes and pump pressure for all outputs are shown on section 3.6.

3:2 BOILER TECHNICAL DETAILS

Maximum Boiler working pressure	**3 Bar - 30.6m Water Head**
Minimum recommended return water temperature	**60°C**
Water Resistance	**Less than 300 m.m.w.g. with 11°C temperature rise across the boiler.**

Maximum Temperature of Adjustable Controls		**Control Stat 85°C +/- 2°C**
		Limit Stat 110°C +0/-6°C
Maximum Emissions Limit (Class 1)		**NOx 250 mg/kWh-CO 125 mg/kWh**
Range of Temperature Control		**Control Stat 0 - 85°C**
		Frost Stat 5°C (nominal)
	LOW	**7.10**
Exit Flue Gas Mass Flow Kg/Sec x 10-3	**MID**	**8.53**
	HIGH	**9.95**
Heat Input (Full Load) kW (based on Net efficiency of 91%)		**22.5**
Heat Output (Full Load) kW		**20.5**

3:3 BURNER DETAILS

Burner type - RIELLO

Pressure Jet - supplied as standard. Manually adjustable air regulator.

The burner must be set to details given in section 3.6.

For further details of the burner, refer to the burner data sheets supplied in the literature envelope.

3:4 ELECTRICS

Electrical Supply 230v., 1 Ph., 50Hz.

IMPORTANT

The Electrical Installation of this appliance must be performed by a suitably qualified electrical engineer/installer.

All wiring to supply and all system components external to boiler must comply with the latest edition of BS7671:2001 formerly IEE Wiring Regulations.

This appliance must be effectively earthed and connection to the supply must be through a double pole isolating switch fused 5 amp. The isolating switch must have all pole contact separations at least 3mm

BOULTER BUDERUS CAMRAY 5 WALL HUNG *PAGE 7*

3:5 DIMENSIONS

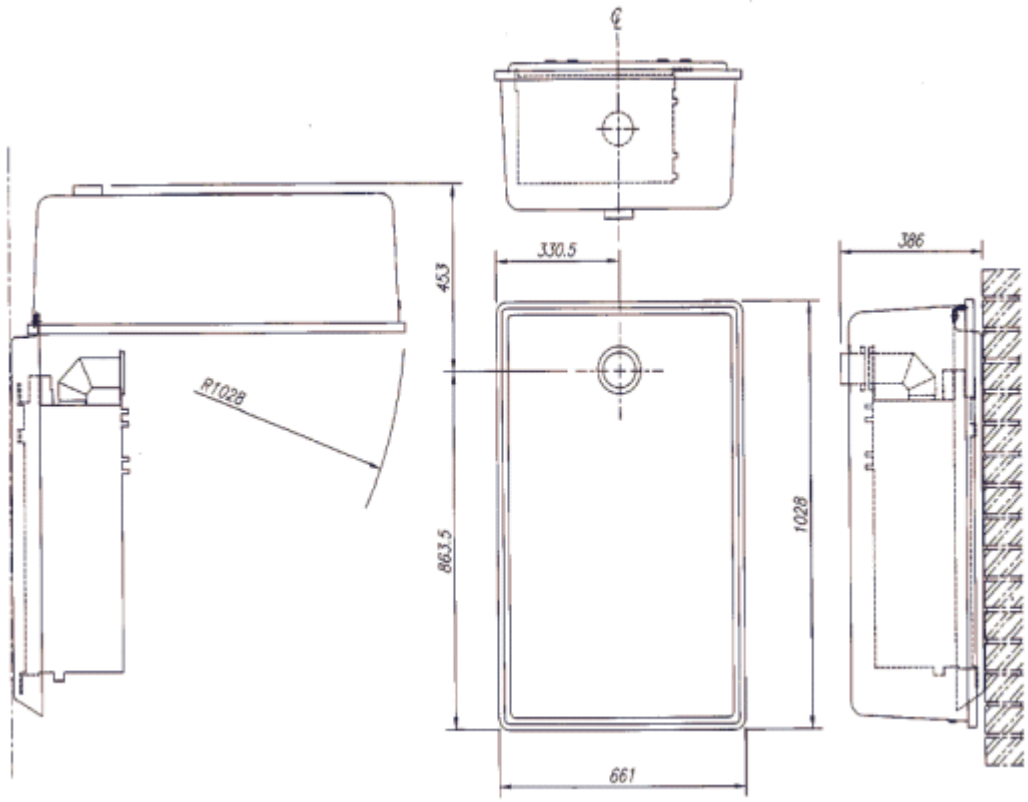

	Output			Weight Empty	Water Content	Filled Weight
Model	**kW**	**Btu/h x 1000**	**ø ins**	**Kgs**	**Litres**	**Kgs**
50/70	**14.5/ 20.5**	**50/70**	**"3/4 BSP**	**100**	**17.5**	**117**

BOULTER BUDERUS CAMRAY 5 WALL HUNG *PAGE 8*

3:6 COMMISSIONING DATA

3:6.1 Class C2, Kerosene Oil RIELLO BURNER

Model Camray 5 Internal	Output		Burner Type	Nozzle	Pump Pressure		Oil Rate	C02	Smoke	Flue Exit
	kW	Btu/h	Riello	Danfoss	bar	psi	Kg/h	%	No.	Temp °C
		x1000								
	14.5	50	RDB 1 WITH T1 SHORT HEAD	0.50x60°ES	6.8	100	1.35	10.5	0-1	165
50/70	17.5	60		0.60x60°ES	6.8	100	1.62	11	0-1	180
	20.5	70		0.65x60°ES	7.5	110	1.90	12	0-1	200

BOULTER BUDERUS CAMRAY 5 WALL HUNG *PAGE 9*

4:1 STANDARDS & REGULATIONS

The installation of the Boiler must comply with the latest edition of : BS 5410 Oil Installations

Pt 1 up to 44kW;

Pt 2 and over 44kW

BS 5449 Forced circulation hot water central heating systems for domestic premises.

BS 4543 Pt. 1 & 3 Factory made insulated chimneys.

BS 7593 Code of practice for the treatment of water in domestic hot water central heating systems.

BS 7671 (2001) Electrical Wiring Regulations.

BUILDING REGULATIONS.

Part J England and Wales

Part F Section III Scotland

Part L Northern Ireland

The Control of Pollution (Oil) Regulations

Oil boilers should be installed in accordance with good practice as recommended by OFTEC (Ref. 2:3 Commissioning page 6).

4:2 THE HEATING SYSTEM

This should be installed in accordance with current good practice as advised by HVCA. It is not the purpose of the manual, nor is it possible, to adequately deal with the subject in this manual.

When designing and installing the controls of the heating system, it must be remembered that if the control system is such that the water circulation through the boiler can be totally or substantially reduced whilst the oil burner can still fire, the water in the boiler will reach very high or boiling temperature before the boiler thermostat can sense it and switch off the Burner.

If this condition is likely wire the controls so that the electrical supply to the burner is switched off simultaneously with the stopping of circulating pumps or the closing of motorised valves.

On existing heating systems where a Boiler is replaced, ensure that the system is chemically cleaned.

The system should contain clean water and be free from leaks. Suitable inhibitors against limescale and corrosion should be added to the system. Refer to BS 7593.

Kettling and system noises can be avoided by suitable pre-treatment (i.e. Chemical Cleaning) at the onset. This is essential when fitting a new boiler to an existing system.

4:3 SITING & POSITIONING

The noise level from Camray boilers is quite low and have not given rise to complaints. Consideration must be given however, to the following points.

1. Noise may be accentuated by the installation in recesses with hard wall surfaces. Due consideration to the siting of boilers should be given.

Further advice from BOULTER BOILERS should be sought where any doubt exists.

2. Some individuals may be particularly sensitive to even low noise levels and this should be discussed before installation.

3. The Boiler is serviced from the front.

4:4 INSTALLATION OF BOILER

4:4.1 THE WALL

Consideration should be given to the weight of the boiler and the Building Regulations regarding different wall materials.

4:4.2 PREPARING THE BOILER FOR WALL MOUNTING

The boiler should be fixed to a suitable external load bearing wall. If the screws supplied are unsuitable for the wall type, use an alternative to suit the application. If in doubt consult a structural engineer.

Ensure that the wall is flat to avoid distortion of the Back Panel.

Check for suitable location of system flow and return pipes, oil supply and electrics before mounting the boiler.

1. Remove boiler carton.

2. Unbolt the hinged GRP Cover.

3. Remove the Control Panel and bracket.

4. Undo the 3 nuts and remove the Heat Exchanger.

5. Remove the burner (1 nut).

6. Undo the screws retaining the 'H' Bracket and GRP Back Panel and discard the pallet.

BEFORE MOUNTING THE BOILER

1. Using the GRP Back Panel as a template, mark the hole positions for the water and electrical supplies and the 'H' Bracket fixings.

2. Drill the holes and secure the GRP Back Panel, between the 'H' Bracket and the wall, using the Rawl bolts provided (or suitable alternatives).

4:4.3 MOUNTING THE BOILER

1. Carefully lift the Heat Exchanger onto the 'H' Bracket and secure.

2. Refit the Control Panel and burner.

3. Connect oil and electric supplies. (See sections 4:8 & 4:10).

4. Check the baffles for correct location. (See Fig. 8.3a).

5. Bolt the hinged GRP Cover to the Back Panel and secure in the open position.

6. Check the Cover closes and locks and that a satisfactory seal is made between the Flue Terminal and Duct.

4:4.4 WATER CONNECTIONS

Connect the Fully Pumped system to the flow and return $^{3}/_{4}$" tappings. Ensure the correct connections are made (ie. Flow on the Right and Return on the Left).

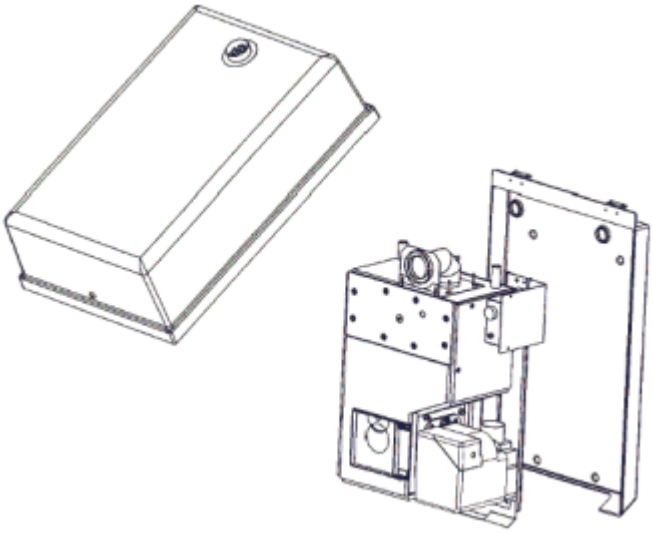

Fig 4:4a

BOULTER BUDERUS CAMRAY 5 WALL HUNG *PAGE 11*

4:7 OIL STORAGE

4:7.1 Oil Tank

Consideration to the access by fuel delivery lorries should be given when positioning the oil tank. Tank positioning should be in accordance with BS 5410 Part 1 and OFTEC Technical Book 3. In the interest of most economical deliveries the Oil Tank should be of 3,000 litres (600 gallons) capacity.

It should be complete with the following:

1. Sludge Cock - on steel tanks.

2. Outlet Valve.

3. Contents Indicator.

4. Screw fill connection and independent vent. The Fill and Vent should be suitably capped to prevent ingress of water or fitted with return bends.

4:7.2 Steel Tanks

Tanks should be mounted on suitable supports, if these are of brick or blocks, a damp proof membrane should be inserted between the tank and its supports.

Tanks should slope 20mm per 1m of length downwards from the Oil Outlet to the Sludge Cock situated at the opposite end.

4:7.3 Plastic Oil Tanks

Tanks made from plastic are now available. These should be UV stabilised for protection against sunlight, and coloured green. Plastic tanks do not need to stand on piers, but should be supported across the entire base area, ideally on 50mm thick garden slabs or a concrete base. As there is only one tapped outlet they are more suited to single pipe feed as gravity supply or with a Boulter 3K Oil Loop Deaerator where suction lift is required. (Part No. BS 03060)

4:8 OIL SUPPLY

All joints in the Oil Lines must be oil tight and the Oil Line should be flushed clean before connecting to the burner.

Note that no soldered joints are permissible in the oil line.

4:8.1 Oil Filter

An Oil Filter is supplied with the Boiler. Connections are 1/4 BSP Female, see fig. 4:8c.

It is essential for reliable operation that the Oil Filter is fitted in the Oil Pipe supplying Oil from the Tank to the Burner. It should be fitted as close to the Boiler as practicable, but NOT inside the Boiler casing.

It is a condition of the guarantees that the Filter is fitted correctly.

4:8.2 Fire Check Valve (Not Supplied)

A Remote acting FIRE VALVE* must be fitted in the suction line at the time of installation - see BS 5410: Part 1.

The valve must be fitted external to the Boiler.

The sensor should be located above the Burner in the clip provided, see figs. 4:8a, 4:8b, 4:8d & 4:8f.

The entry point for the Fire Valve Sensor should be through the bottom of the rear casing panel.

*Remote Acting Fire Valves are available from Boulter, through your merchant or installer e.g.

Ref:	Operating Temperature	Capillary Length
RAF9015C	90°C	1.5m
RAF9030C	90°C	3.0m
RAF9060C	90°C	6.0m
RAF9090C	90°C	9.0m

4:8.3 Single Pipe System

Fig. 4:8b

If the bottom of the Oil Tank is above the oil Burner, install a 10mm copper supply pipe to the Burner incorporating the correct Filter, Shut Off Valve and Fire Check Valve.

Ensure that the Burner Oil Pump is correctly set for 'Single Pipe' operation. (See 4:9.b).

4:8.4 Two Pipe System

Fig. 4:8d

When the bottom of the Oil Tank is below the level of the Oil Pump on the Burner it is necessary to install an additional 10mm return pipe.

The Oil Filter, Shut Off Valve, spring loaded Non-Return Valve and Fire Check Valve are always in the suction line supplying oil from the Tank to the Burner.

The Non-Return Valve must be fitted to allow the flow in the correct direction and prevent drain back to the Tank, see fig. 4:8e**.**

Ensure that Valves are NOT fitted in the Return Line. The Return Line must be unobstructed at all times.

Ensure that the Burner Oil Pump is correctly set for 'two Pipe' operation. (See 4:9.1)

4:8.5 Deaerator Oil Pipe System

Fig. 4:8f

An alternative two pipe arrangement can be achieved using a 3K-Oil Loop Deaerator which removes the air from the oil feed on a single pipe lift. The Burner Pump is piped to the Deaerator, which should be positioned close to the burner, but NOT inside the Boiler Case. A Non-Return Valve is not required in the return line.

The advantage of this system is gained where a two pipe run from the oil supply tank is long or difficult to achieve.

Boulter 3K Deaerators are available as an optional extra from your merchant (Part No. BS 03060).

4:8.6 Water Separator Oil Filter

For changeover applications, the use of a Water Separator Oil Filter, available from BOULTER BUDERUS is recommended (BS03052).

4:8.7 Flexible Oil Pipes

Camray 5 Boilers and 3K Deaerator Fitting Kits are supplied with long life Flexible Oil Pipes.

The Flexible Oil Pipes are fitted inside the Boiler casing and are of adequate length to enable the Burner to be removed without disconnecting. When fitted correctly the pipes should be curved round the Burner as shown in Fig.4:8a.

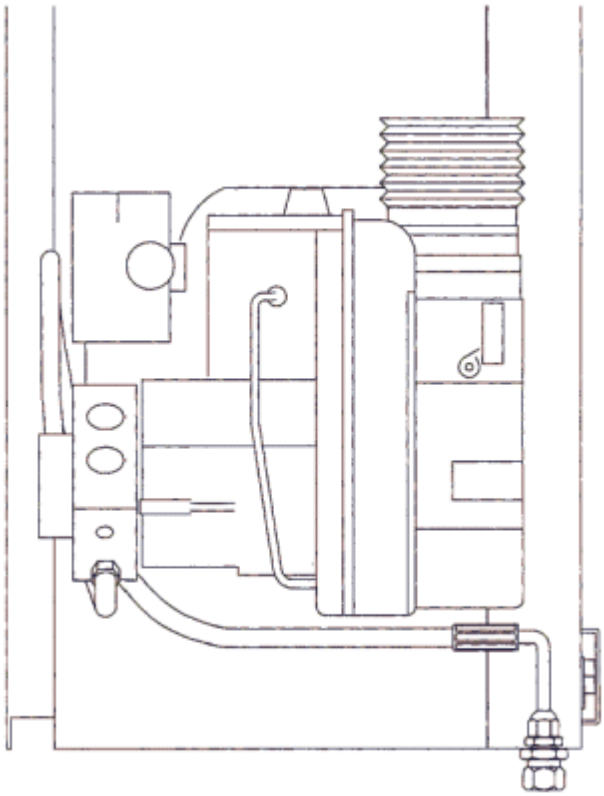

Fig. 4.8a
Flexible Oil Pipes

BOULTER BUDERUS CAMRAY 5 WALL HUNG PAGE 13

SINGLE PIPE OIL SYSTEM - TANK OUTLET ABOVE BURNER

DO NOT FIT PUMP BYPASS SCREW TO BURNER - SEE 4.9.2

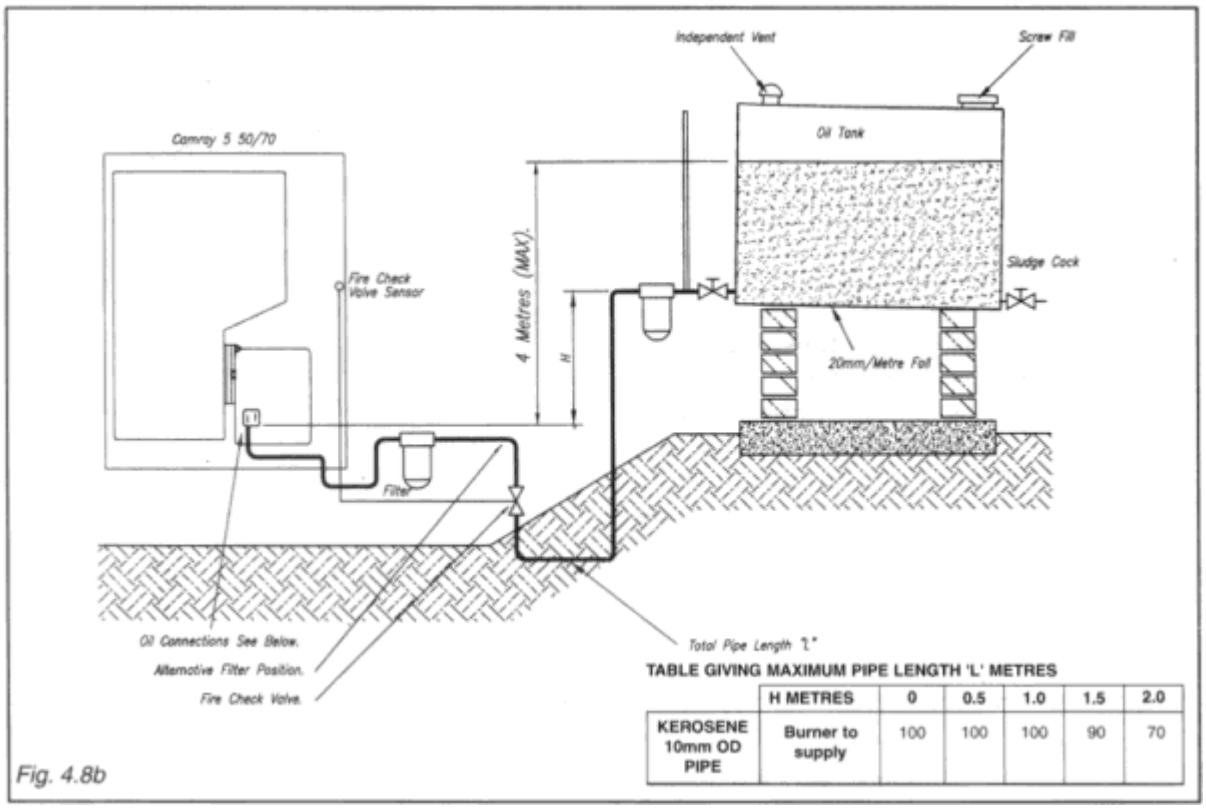

TABLE GIVING MAXIMUM PIPE LENGTH 'L' METRES

	H METRES	0	0.5	1.0	1.5	2.0
KEROSENE 10mm OD PIPE	Burner to supply	100	100	100	90	70

Fig. 4.8b

SINGLE PIPE OIL SYSTEM - OIL CONNECTIONS

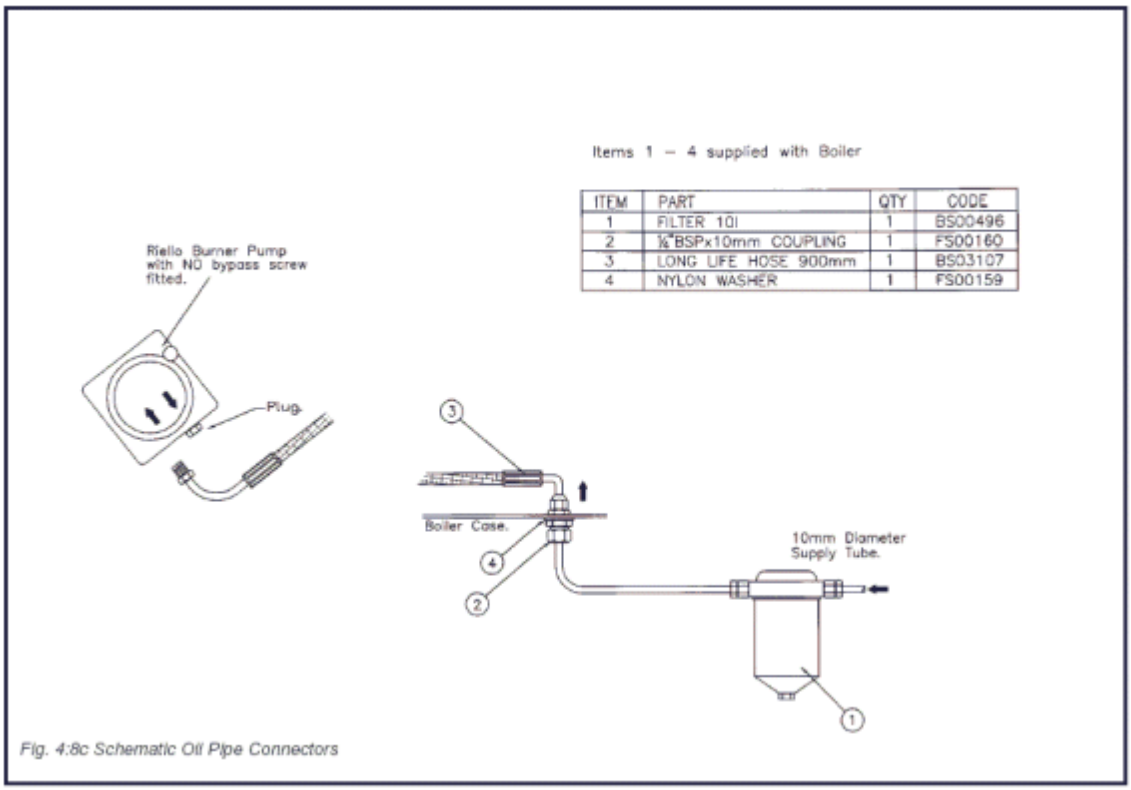

Items 1 – 4 supplied with Boiler

ITEM	PART	QTY	CODE
1	FILTER 10l	1	BS00496
2	¼"BSPx10mm COUPLING	1	FS00160
3	LONG LIFE HOSE 900mm	1	BS03107
4	NYLON WASHER	1	FS00159

Fig. 4:8c Schematic Oil Pipe Connectors

Fig. 4:8c Schematic Oil Pipe Connectors

BOULTER BUDERUS CAMRAY 5 WALL HUNG *PAGE 14*

TWO PIPE OIL SYSTEM - TANK OUTLET BELOW BURNER

FIT PUMP BYPASS SCREW TO BURNER

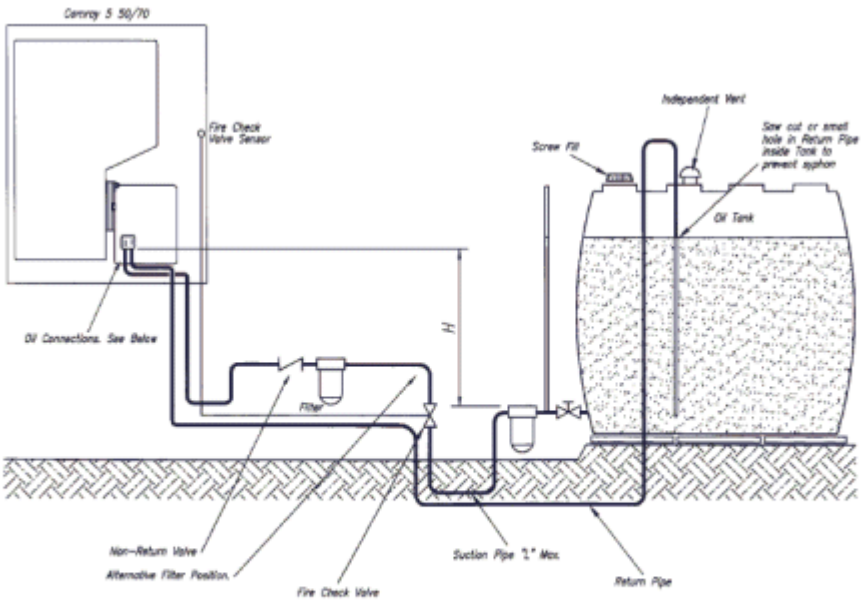

TABLE GIVING MAXIMUM PIPE LENGTH 'L' METRES

	H METRES	0	0.5	1.0	1.5	2.0
KEROSENE 10mm OD PIPE	Burner to supply	100	100	100	90	70

Fig. 4.8d

TWO PIPE OIL SYSTEM - OIL CONNECTIONS

Items 1 – 4 supplied with Boiler.

ITEM	PART	QTY	CODE
1	FILTER 10l	1	BS00496
2	¼"BSPx10mm COUPLING	2	FS00160
3	LONG LIFE HOSE 900mm	2	BS03107
4	NYLON WASHER	2	FS00159
5	NON RETURN VALVE	1	BS00538
6	⅜"BSPx10mm COUPLING	2	FS00157
7	NYLON WASHER	2	FS00159

Items 5, 6 & 7 NOT supplied with Boiler.

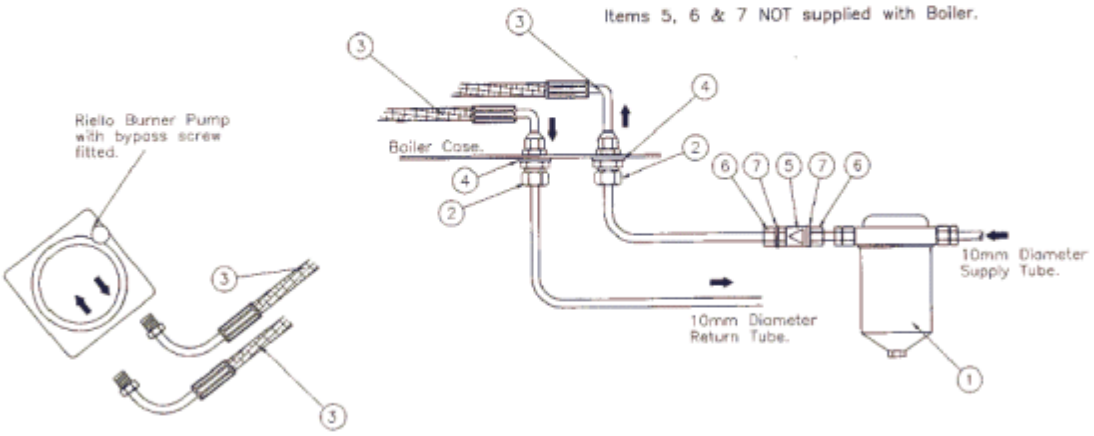

Fig. 4.8e

BOULTER BUDERUS CAMRAY 5 WALL HUNG *PAGE 15*

DEAERATOR OIL SYSTEM - TANK OUTLET BELOW BURNER

FIT PUMP BYPASS SCREW TO BURNER

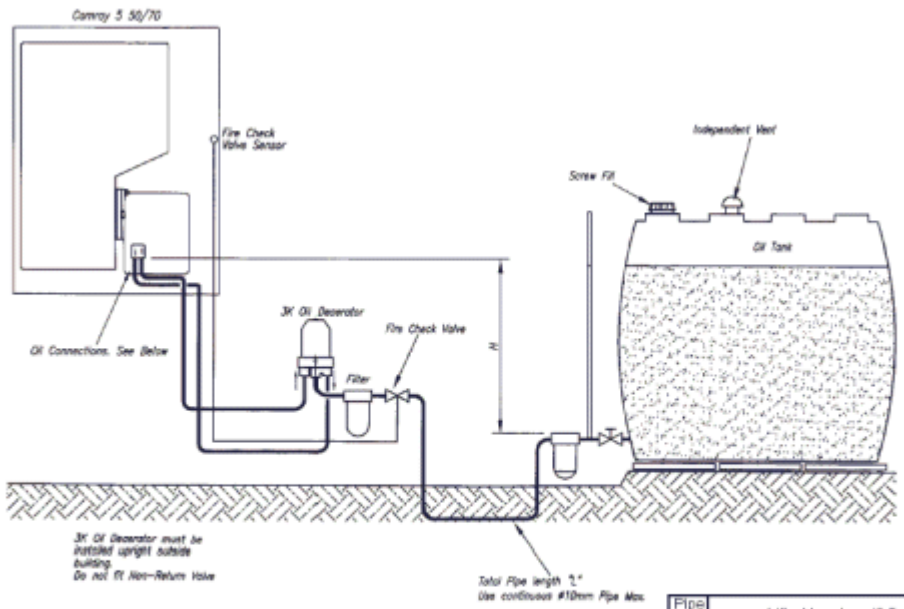

Pipe Size mm O/D	Lift - H metres (3.5m Max)							
	0	0.5	1.0	1.5	2.0	2.5	3.0	3.5
6	24	21	19	16	13	11	8	6
8	100	100	93	84	71	59	46	33
10	100	100	100	100	100	100	100	100

Fig. 4.8f

DEAERATOR PIPE OIL SYSTEM - OIL CONNECTIONS

Items 1 – 4 supplied with Boiler.

ITEM	PART	QTY	CODE
1	FILTER 10l	1	BS00496
2	¼"BSPx10mm COUPLING	2	FS00160
3	LONG LIFE HOSE 900mm	2	BS03107
4	NYLON WASHER	2	FS00159
5	3K OIL LOOP	1	BS03060
6	¼"BSPx10mm COUPLING	2	FS00151

ITEMS 5 & 6 NOT SUPPLIED WITH BOILER.
ITEM 6 IS AVAILABLE AS A KIT No. BS03054C.

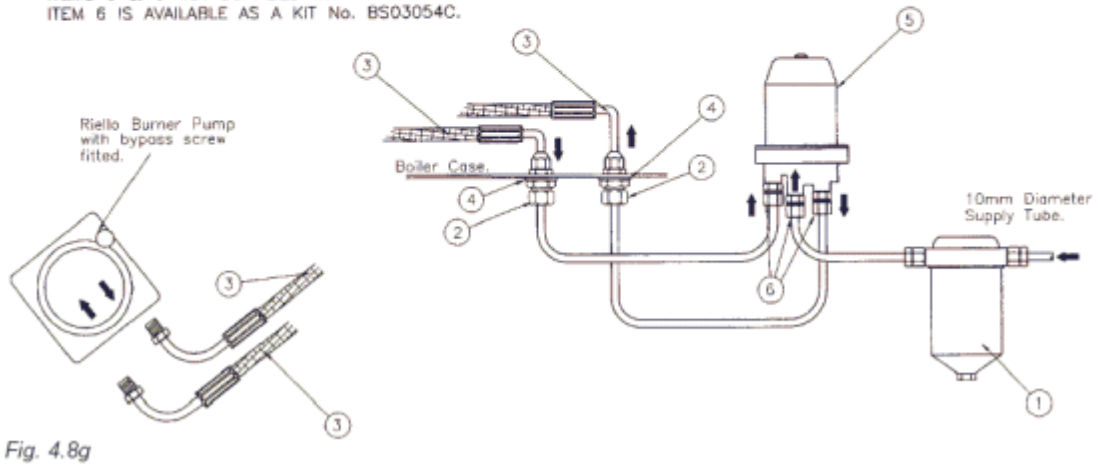

Fig. 4.8g

BOULTER BUDERUS CAMRAY 5 WALL HUNG *PAGE 16*

4:9 OIL BURNER

The Burner makers' technical leaflet is supplied with this manual and provides supplementary information not included in this manual.

4:9.1 Burner Pump for Two Pipe and Deaerator System

For two pipe oil systems the Burner Oil Pump has to be fitted with the Bypass Screw. Boilers are dispatched with the Bypass Screw fitted to the pump.

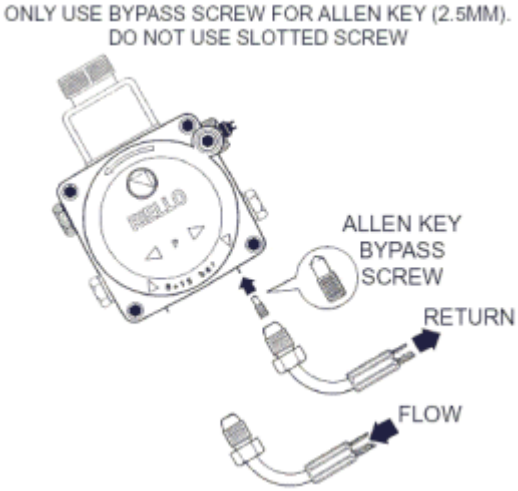

Fig. 4.9a Burner Pump for Two Pipe Operation

4:9.2 Burner Pump for Single Pipe System

The Bypass Screw must be removed and the return port plugged.

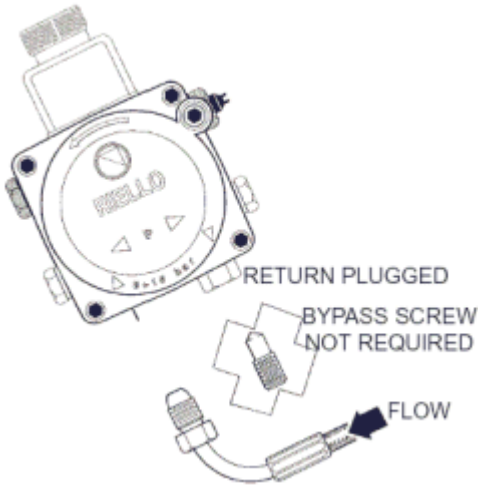

Fig. 4.9b Burner Pump for Single Pipe Operation

BOULTER BUDERUS CAMRAY 5 WALL HUNG *PAGE 17*

4:10 CONTROL PANEL

The Control Panel is pre-wired and fitted to the Boiler ready for connection to the system wiring.

4:10.1 Connecting Control Panel

Connect the mains electrical supply to the Control Panel. See Fig. 4:10a.

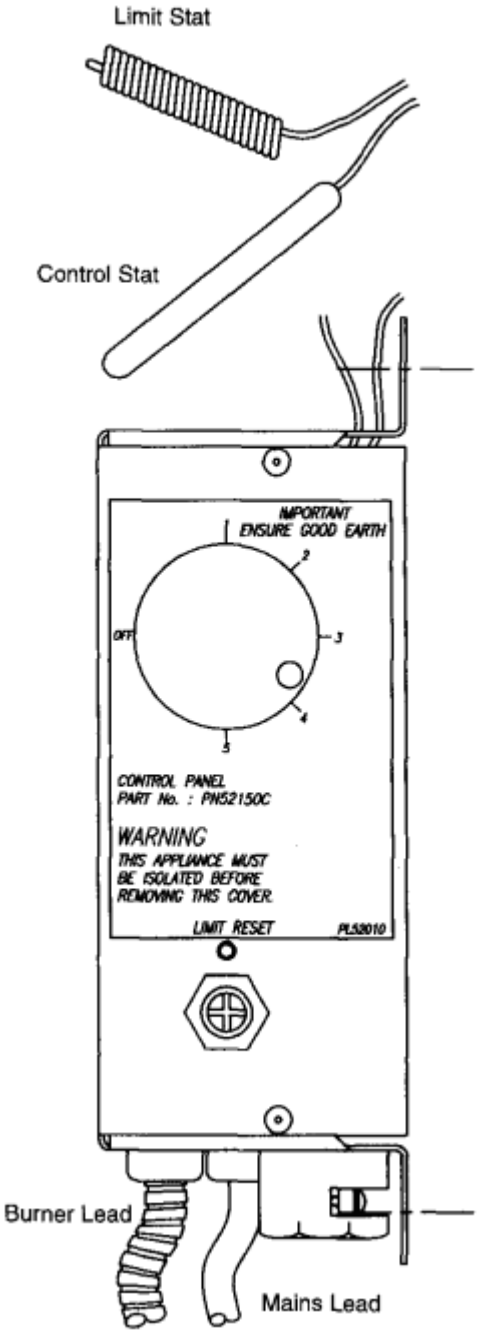

Fig. 4.10a Control Panel

4:10.2 Phial Positions

1. Insert the Boiler Control Stat 8mm Plain Phial into a pocket on the top of the Boiler Heat Exchanger as shown in Fig. 4:10b.

2. Insert the Limit Stat 8mm Coiled Phial into the second pocket on the top of the Boiler Heat Exchanger. See Fig. 4:10b.

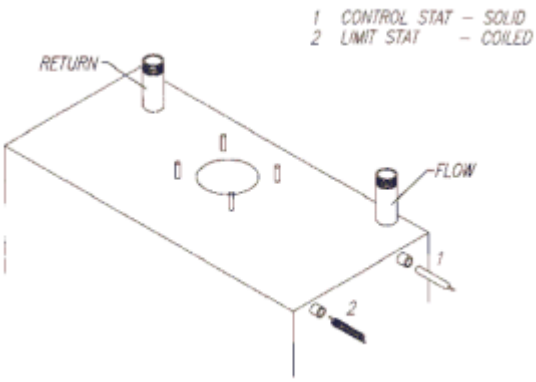

Fig. 4.10b Phial Positioning

BOULTER BUDERUS CAMRAY 5 WALL HUNG *PAGE 18*

4:11 PANEL WIRING DIAGRAM

IMPORTANT ENSURE GOOD EARTH

CAMRAY 5 STANDARD CONTROL PANEL SCHEMATIC WIRING DIAGRAM

Actual Size (For Reference).

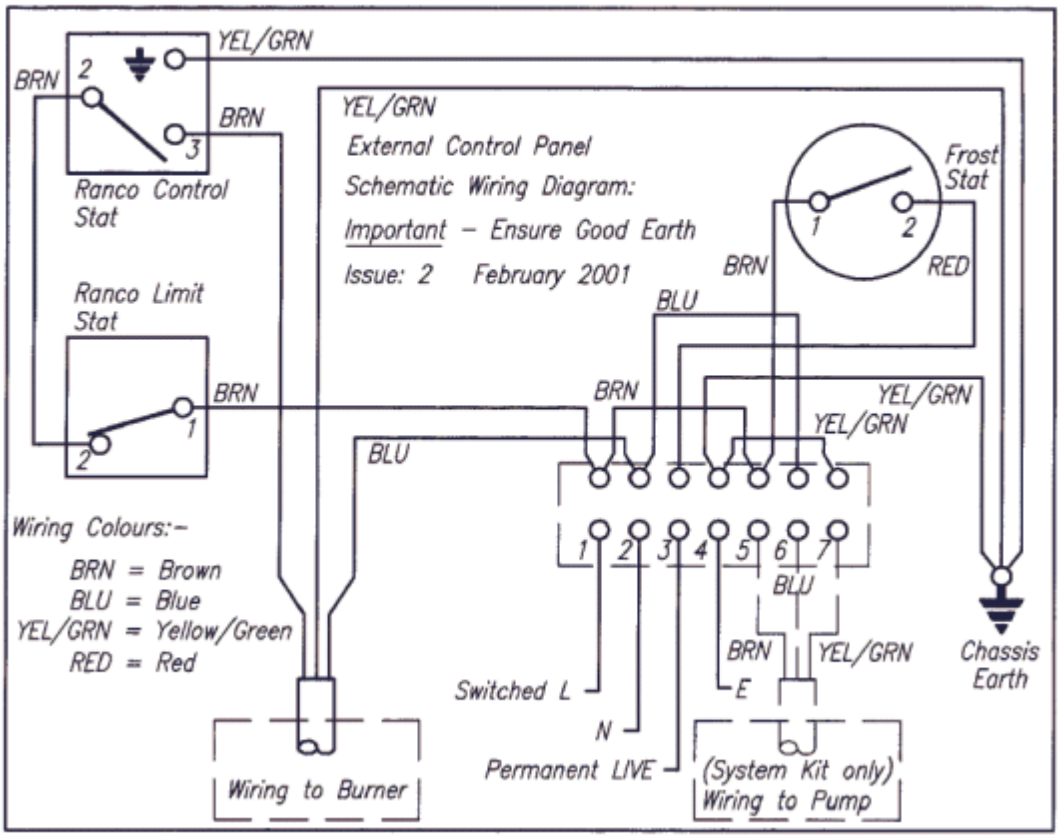

Fig. 4:11 Wiring Diagram.

BOULTER BUDERUS CAMRAY 5 WALL HUNG *PAGE 19*

7:1 COMMISSIONING

It is essential in the interest of boiler efficiency and reliable performance that once the boiler has been installed it is first commissioned by a competent engineer, preferably an OFTEC commissioning engineer.

If an engineer is not known Boulter Buderus will be pleased to provide details of commissioning and servicing engineers from their register. Commissioning must be carried out at the point of first firing.

Incorrect emissions can cause premature fouling of the flue ways.

7:2 RESPONSIBILITY

It is the responsibility of the installer to ensure that the boiler is properly commissioned. It is essential that the commissioning procedures detailed in this manual are carried out by a qualified engineer using recognised test equipment.

It is recommended that the relevant section of BS 5410: Part 1: latest edition is carefully read.

7:3 REPORTING

It is recommended that you use a report sheet and check list. Make comments on the report where necessary, and give a copy to whoever has engaged your services, and retain and file your own copy. A suggested layout is shown over.

IMPORTANT

It is the responsibility of the installer to ensure that the boiler is commissioned by a competent engineer, preferably an OFTEC* Registered Commissioning Engineer.

BOULTER BUDERUS CAMRAY 5 WALL HUNG *PAGE 20*

7:4 BOULTER BUDERUS RECOMMENDED COMMISSIONING CHECK LIST - SHEET 1 OF 2

Customer .....

Site Address .....

.....

Tick off each item

OIL TANK

☐ Is there sufficient oil, and of the correct grade for the appliance?

☐ Is the tank adequately supported?

☐ Is a damp-proof membrane inserted between the tank and support? (Non plastic tanks).

☐ Does the tank slope at least 20mm per metre of length downwards towards the sludge cock? (Non plastic tanks).

☐ Is the tank painted or suitably protected externally?

Is the tank fitted with the following:

- ☐ Contents gauges
- ☐ Screw fill and independent vent cover or capped fill and vent pipes.
- ☐ Outer valve
- ☐ Filter
- ☐ Sludge cock (Non plastic tanks).

HEIGHT OF TANK

- ☐ Is the bottom of the tank above the oil pump if a single pipe system is installed?

OIL SUPPLY LINE

- ☐ Ensure that galvanised iron has not been used.
- ☐ If black iron has been used, is it protected against corrosion?
- ☐ Ensure that soldered connections on copper pipes have not been used.
- ☐ Is the size of the pipe adequate for the boiler rating?
- ☐ Are all joints leak proof?
- ☐ Is a fire valve fitted?
- ☐ Is a filter fitted? (correct way round)
- ☐ Is the oil line connected to the correct inlet connection of the pump?

Appliance Model.....
Serial No.....
Fuel.....

- ☐ Is the oil supply clean and free of water or other contamination?
- ☐ Disconnect the oil supply as close to the burner as possible and drain approximately a gallon of oil into a very clear container. Inspect the oil for impurities and repeat the process if necessary.

Do not re-connect the oil line until water and all impurities have been removed from the oil supply.

IF NOT THIS MAY DAMAGE THE PUMP.

- ☐ Clear oil filters and de-sludge the tank if necessary.

TWO PIPE OIL SYSTEMS

- ☐ Is a spring-loaded non-return oil valve fitted in the suction line? (or a 3K Oil Deaerator).
- ☐ Does the return oil line terminate in the take at the same level as the suction outlet?
- ☐ Has an anti-syphon cut been made in the return oil line (inside the tank)?

BOILER

- ☐ Are the thermostat phials inserted in their pockets?
- ☐ Are the baffles correctly located?
- ☐ Is the boiler set for the fuel being supplied?
- ☐ Has the system and boiler been filled with water and inhibitor as required?
- ☐ Is the boiler flueway inspection cover screwed down sufficiently firmly to form a seal?

BOULTER BUDERUS CAMRAY 5 WALL HUNG *PAGE 21*

7:4 BOULTER BUDERUS RECOMMENDED COMMISSIONING CHECK LIST - SHEET 2 OF 2

CASING PANELS

- ☐ Does electrical cabling pass through a grommet to prevent chaffing?

BURNER

- ☐ Is the oil pump by-pass screw fitted, if applicable?
- ☐ Remove the burner. Is the correct nozzle fitted?

NOTE:- Burner operating instructions can conflict because they are intended for general guidance. Since the burner has been specifically matched to the particular boiler, the information in the Boiler manual takes precedence.

ELECTRICAL POWER SUPPLY

- ☐ Is the electrical supply to the appliance appropriate?

☐ Are the electrical input connections to the control panel correct?

☐ Is the supply fuse correct?

☐ Does the wiring comply with the latest IEE regulations?

☐ Does the power supply cable enter the casing through a grommet?

GENERAL

☐ Has the boiler been installed in accordance with manufacturers instructions?

BOULTER BUDERUS CAMRAY 5 WALL HUNG *PAGE 22*

7:5 BOULTER BUDERUS RECOMMENDED COMMISSIONING TESTS

☐ Have the manufacturers on-site assembly instructions been followed?

COMMISSIONING TESTS

☐ BEFORE ATTEMPTING TO START THE BOILER PLEASE THOROUGHLY CHECK ALL ITEMS ON THE COMMISSIONING CHECK LIST. THIS WILL HELP TO AVOID UNNECESSARY CALL BACKS

☐ ENSURE THAT THE BOILER IS MATCHED MOST CLOSELY TO THE HEATING SYSTEM REQUIREMENTS BY FITTING THE CORRECTLY SIZED NOZZLE AND/OR CHOOSING THE CORRECT OIL PRESSURE.

☐ Fit combined air bleed manifold and 0-300psi (0-20 bar) pressure gauge to the appropriate oil pump connection, and replace burner.

☐ Set the boiler thermostat to between Summer and Winter positions, see fig. 1.

☐ Switch on the electrical supply to the boiler, checking that programmers are switched to the ‘ON’ position, and that the room thermostats are calling for heat.

When the burner motor starts, on one pipe systems it may be necessary to temporarily open the air bleed screw on the test manifold.

If the burner locks out during the ignition attempt, wait 45 seconds before pressing the reset button on the control box. Several attempts on first firing may be necessary.

☐ Once the burner is firing check and if necessary adjust the oil pressure.

☐ CARRY OUT COMBUSTION CHECKS BY INSERTING PROBES INTO THE FLUE OUTLET:

☐ Check the Smoke No., if clean wait 10 minutes and measure CO_2.

- ☐ Adjust the air shutter if necessary, open to reduce CO_2, close to increase CO_2.

If the air shutter is adjusted, re-check the Smoke No.

- ☐ Check the flue gas temperature.

The figures should agree with the Boiler Commissioning Data.

- ☐ Check lockout function, either cover the photocell or remove solenoid coil, to simulate flame failure. Reinstate components and press lockout button.

- ☐ Check the operation of the limit thermostat

- ☐ Complete commissioning report and enter the details on to the guarantee form which should be returned to BOULTER BUDERUS in the envelope provided.

- ☐ Instruct the user on the operation of the appliance and leave this manual with the customer.

BOULTER BUDERUS CAMRAY 5 WALL HUNG *PAGE 23*

8:1 MAINTENANCE

A boiler fired with Class C Oil should only require attentions once each year.

8:1.1 General Inspection

With the Boiler operating, inspect for signs of unsatisfactory operation, i.e. leakage of combustion products, leakage of oil, or unusual noises from the pump or motor.

Check the commissioning list if it is your attendance to the appliance. Is there a reason why the Boiler might fail after you leave?

It is useful to measure the combustion date, i.e. CO2, Smoke No. and flue gas temperature, and a check on the oil pressure, prior to carrying out maintenance work.

8:1.2 Maintenance Procedure

Switch off electrical supply at the MAINS ISOLATING SWITCH.

OIL TANK

De-sludge oil tank (if necessary), and draw off any accumulated water.

Check the correct grade of oil is being used.

FILTERS

Inspect and clean all oil filters. Change paper elements for new.

BURNER

Turn off the oil cock and disconnect the flexible oil hose from the oil cock.

Remove burner and clean thoroughly, the burner draught tube, the electrodes and generally the head assembly. CHANGE the nozzle for one with the specified make, oil rate, spray pattern and angle.

Inspect the ignition electrodes for crazing in the porcelain. Replace if there are signs of deterioration.

A dirty fan impeller can impair the performance of a burner, inspect and clean if necessary.

Inspect photocell, if badly discoloured, change it. Inspect the flexible oil hose for leaks or discolouration. Use only replacement flexible oil hoses that are detailed in the spare parts section of this manual.

8:1.3 Burner Support

The burner can be supported on the hinged bracket during inspection of the burner head assembly.

BOILER

The Boiler is serviced from the front.

Remove flue inspection cover/s, and baffles, and clean all heat transfer surfaces and baffles. Replace any damaged or unserviceable parts with manufacturers proprietary parts.

Inspect flue for deterioration of seals, and repair if necessary.

Refit parts and inspect seals etc. which should be replaced if required.

COMBUSTION TESTS

Fit combined air bleed manifold and 0-300psi (0-20 bar) pressure gauge to the appropriate oil pump connection, and replace burner.

Switch on the electric supply to the boiler.

When the burner motor starts, on one pipe systems, it may be necessary to temporarily open the air bleed screw on the test manifold.

Once the burner is firing check and if necessary adjust the oil pressure.

Carry out combustion checks by inserting probes into sampling points provided or at the flue outlet.

Check the Smoke No., if clean wait 10 minutes and measure CO_2.

Adjust the air shutter (see fig 8.2a), if necessary, open to reduce CO_2, close to increase CO_2. If the air shutter is adjusted, re-check the Smoke No.

Check the flue gas temperature.

The figures should agree with data in Boiler Commissioning Data, Section 3.

FINAL CHECKS

Check lockout function, either remove photocell and cover it, or remove solenoid coil, to simulate flame failure. Reinstate components and press lockout reset button.

Check that the control thermostat is operating when the set temperature is reached.

Check the operation of the limit thermostat if possible.

Reset Limit thermostat once appliance temperature has dropped sufficiently.

Complete a maintenance report and give the customer a copy, retaining a copy for your records.

BOULTER BUDERUS CAMRAY 5 WALL HUNG *PAGE 24*

8:2 AIR SHUTTER ADJUSTMENT

The Burner has a fixed Air Shutter with manual adjustment.

To adjust the CO_2 at the Air Shutter use a 3mm allen key as shown. To increase the setting turn the air shutter clockwise (+) and to decrease turn anticlockwise (-).

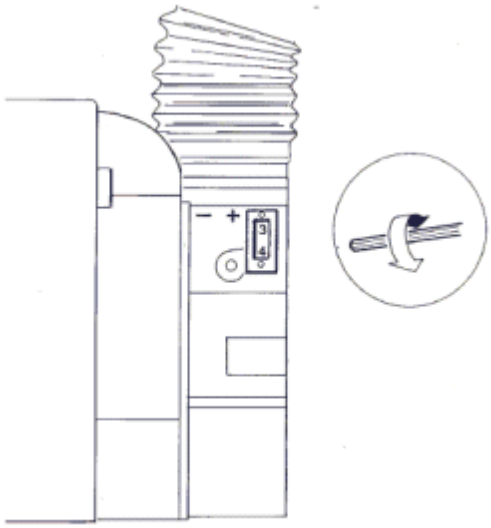

Fig. 8:2a Air Shutter Adjustment

8:3 BAFFLE ARRANGEMENT

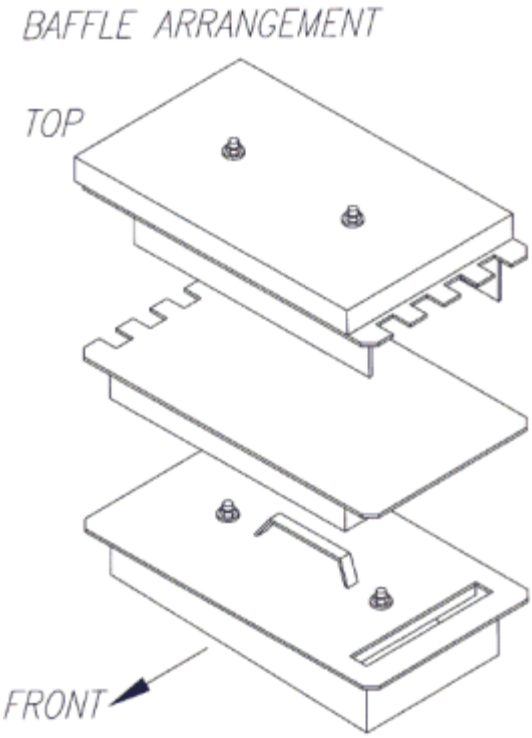

To ensure correct placement of baffles ensure that all baffles are horizontal

Fig. 8.3 Baffle Arrangement

BOULTER BUDERUS CAMRAY 5 WALL HUNG *PAGE 25*

10:1 FAULT FINDING

If the Boiler fails to start, make the following checks before calling a service engineer:-

1. Is there sufficient fuel in the storage tank?

2. Are all fuel supply valves open (turned fully anti-clockwise) and ball valves open?

3. Is the mains electricity supply switched on?

4. Is the programmer (or Boiler Operating Switch) set to call for heat?

5. Is the Boiler Thermostat set to the desired temperature?

6. Is the Lock-out Reset Button on the Control Box and Control Panel Neon illuminated? If so, press to reset Burner.

7. Check the fuse which should have been fitted to the mains electricity supply to the programmer/boiler operating switch. If the fuse has blown, replace it. If it blows again, call a Service Engineer.

IMPORTANT - Electrical Safety

IT IS ESSENTIAL THAT BEFORE ANY PANELS OR COMPONENTS ARE REMOVED FROM THE BOILER, THAT THE MAINS ISOLATOR IS SWITCHED OFF.

10:2 Fault Finding Chart

	Trouble or Complaint	Possible Cause	Action
1.	Suspect oil supply	No oil in tank	Check and arrange for tank to be filled if necessary
		Supply valves closed	Open all supply valves
		Blockage in oil supply (Gravity head feed)	Shut off the burner isolating valve. Disconnect the oil supply at the pump entry. Place receptacle under the pipe. Slowly open the valve, check flow is unrestricted, restricted or blocked.
		Wrong grade of oil	Check for correct grade of fuel (see technical data)
		Water contamination	Open tank, drain valve and check
		Tank vent blocked	Check
		Filter blocked	Check for water or blockage
		Air locks in supply pipe	Check for high points in main oil supply
		Air lock in pump	Bleed pump, check flexible oil line.
2.	Burner will not start	Interruption or absence of electrical supply at burner (Check this at Control Box mains terminal with test lamp)	Check mains switch on. Check fuse in switched spur or plug. Check that time switch or programmer contacts are closed. Check that the auxiliary stat is closed. Check boiler stat, cylinder stat, room stat are calling for heat.
		Control Box is locked out, refer to symptom 4	Press reset button on the burner box
		Photo-resistor receiving false light	Check that the photo-resistor is fully home in its housing. Burner will not start with illuminated cell.
		Faulty control box	Replace.
3.	Burner lights up but	No oil supply	Check oil in the tank.

	locks out after 15 seconds	Photo-electric cell not receiving light from flame	Check that photo-electric cell is clean and fully home in housing
		Photo-electric cell connections loose	Check and tighten if necessary.
		Control box photo-electric cell circuit faulty	Replace control box.
		Flame instability	Check combustion setting out and reset if necessary.

BOULTER BUDERUS CAMRAY 5 WALL HUNG *PAGE 29*

4.	Burner starts but will not light up	This can be due either to absence of oil or ignition.	
		Oil pump air locked (repeat air locking may be due to poor pipe joints or defective gland packings)	Pump should be self-venting with two pipe system only. If a one pipe gravity feed is employed it must be purged through the vent port.
		Motor not driving pump shaft	Check that flexible drive is functioning correctly and not slipping.
		Blocked atomiser nozzle	Remove and replace nozzle.
		Oil pressure abnormally low	Check oil pressure on gauge and set to the correct pressure (see technical data).
		Solenoid valve faulty	Break union at outlet to check presence of oil. Check that seat is clear. Check coil for continuity. Inspect coil feed wiring to control box.
		Pump rotation incorrect	Check.
		Ignition failure:	
		Electrodes dirty	Inspect and clean if necessary.
		Electrodes mis-set	Inspect and reset gap 3 to 4mm between tips. 2mm in front of nozzle face.
		Cracked electrode insulator.	Check and replace if cracked or crazed.
		Electrode leads	Check for proper connections
5.	Burner lights up, runs continuously and emits visible smoke or shows excess smoke on combustion check	Air shutter closed	Reset to correct position.
		Wrong nozzle	Check make, type and spray angle.
		Worn atomiser nozzle	Replace if necessary.
		Oversize nozzle fitted in error	Check size and replace with correct size of necessary.
		Nozzle incorrectly stamped	Replace with correct nozzle.
		Burner air supply inadequate	Inspect air intake and fan for fouling of impeller with dirt.
		Burner oil pressure excessive	Check pressure and reset to correct pressure (see Technical Data).
6.	Burner lights up, runs normally but flame cuts off slowly on shut down (possibly with smoke or pulsation)	Air in nozzle	Should self-correct; if air repeatedly present; check for leaks in the oil supply .
		Magnetic valve not operating correctly	Inspecting and replace if necessary.
		Shut off piston in pump sticking	Replace pump.
7.	Burner Pulsates (a) continuously	Air shutter setting incorrect or fan inlet blocked	Inspect and reset or remove blockage.
		Grossly oversized nozzle	Checked and replace with correct size and type (see Technical Data)
		Air supply inadequate	Check fan operation and cleanliness.

BOULTER BUDERUS CAMRAY 5 WALL HUNG *PAGE 30*

7.	Burner pulsates	Worn nozzle with	Replace with nozzle of correct type and size (see

	(a) continuously	excess throughout or uneven spray pattern	Technical Data).
	(b) at initial firing	Air in supply line	Purge at pump to remove.
		Blocked flue ways	Clean boiler and flue.
8.	Burner locks out on morning starts then runs perfectly for rest of day	Localised low voltage supply in early morning	Check with local Electricity Board to fit recorder. Enlist aid of the Board.
		Air present in oil supply	Restart burner several times - press lockout reset button repeat 7(b) above.
		Bottom of oil tank below level of oil pump	Raise tank or install a two pipe oil supply from tank.
		Non-return valve faulty or air leak in two pipe oil supply system.	Renew non-return valve. Rectify air leak
9.	Burner fails due to blown fuse.	Short circuit in wiring	Inspect wiring, sheathing and inter-component connections for broken or damaged leads. Replace if necessary.
		Motor seized	Check by hand and replace if necessary.
		Breakdown of insulation of motor windings	Replace motor.
10.	Burner runs normally but will not reach desired temperature	Oil throughput insufficient	Check nozzle size and pressure against rating
		Boiler has become undersized due to heating system expansion	Check with heating installer.
		Low efficiency and CO_2	Check combustion readings, reset air.
		Low efficiency due to high flue gas temperature	Clean heat exchanger surfaces
		Faulty boilerstat. Partially blocked filter	Replace, check and clean.
11.	Poor combustion readings	Low CO_2	Check: CO_2, oil pressure, nozzle size (see Technical Data
		High CO_2	Check: CO_2, oil pressure, nozzle size (see Technical Data
		High smoke	Check: CO_2, oil pressure, nozzle size (see Technical Data Check flue for leakage of gases. Check all Baffles are in place and correctly located.
		High flue gas temperature	Check: air shutter, nozzle size (see Technical Data), clean heat exchanger surfaces.
12.	Oil odour	Leaking joints	Break all leaking joints and re-make

BOULTER BUDERUS CAMRAY 5 WALL HUNG *PAGE 31*

13.	High operating temperature	Control stat failed and operating on limit stat	Replace control stat and reset Limit Thermostat
14.	Fumes in Boiler Room	Inadequate draught due to unsatisfactory chimney or blockage of boiler flue ways or flue pipe	Take necessary corrective action
15.	Unstable flame, some puffing, ignition cuts in intermittently	Air damper on burner improperly adjusted or faulty nozzle or unsatisfactory draught conditions or fault in oil supply	Set up burner as for commissioning using oil pressure gauge, smoke pump, CO2 indicator and draught gauge, adjust settings as necessary, replace nozzle if necessary. See Commissioning Check List and Servicing Notes.

Due to a policy of continual development Boulter Buderus reserves the right to alter or amend the design of its products without prior notice.

BOULTER BUDERUS CAMRAY 5 WALL HUNG *PAGE 32*

Boulter Buderus Limited, Magnet House, 30 White House Road, Ipswich IP1 5JA Tel: 01473 241555 Fax: 01473 241321

Boulter Buderus policy is one of continuous research and development and this may necessitate alterations to this specification from time to time.

Boulter Buderus reserve the right to do this without prior notification.